Mazda Workshop Manual

mazda

VEHICLE IDENTIFICATION NUMBERS (VIN)

1YV GF22C*W5 600001—
1YV GF22D*W5 600001—

RELATED MATERIALS

1998 626 Service Highlights 3311–10–97I
Engine Workshop Manual FS 1582–10–97I
Engine Workshop Manual KL 1583–10–97I
Manual Transaxle Workshop Manual G25M-R 1584–10–97I
Automatic Transaxle Workshop Manual GF4A-EL 1585–10–97I
Automatic Transaxle Workshop Manual LA4A-EL 1586–10–97I
1998 626 Wiring Diagram 5410–10–97I

GENERAL INFORMATION

00
SECTION

00

GENERAL INFORMATION 00–00

00–00 GENERAL INFORMATION

HOW TO USE THIS MANUAL 00–00–2
Range of Topics 00–00–2
Service Procedure 00–00–2
Symbols 00–00–4
Advisory Messages 00–00–4
Upper and Lower Limits 00–00–4
Troubleshooting Procedure 00–00–4
Procedures for Use 00–00–5
Text Sequence 00–00–7
UNITS 00–00–8
Conversion to SI Units (Système International d'Unités) 00–00–8
Rounding Off 00–00–8
Upper and Lower Limits 00–00–8
SAE STANDARDS 00–00–8
FUNDAMENTAL PROCEDURES 00–00–10
Protection of the Vehicle 00–00–10
Preparation of Tools and Mesuring Equipment 00–00–10
Special Tools 00–00–11
Disconnection of the Negative Battery Cable 00–00–11
Removal of Parts 00–00–11
Disassembly 00–00–11
Inspection During Removal, Disassembly 00–00–11
Arrangement of Parts 00–00–11
Cleaning of Parts 00–00–11
Reassembly 00–00–12
Adjustments 00–00–12
Rubber Parts and Tubing 00–00–12
Hose Clamps 00–00–12
Torque Formulas 00–00–12
Vise 00–00–13
Dynamometer 00–00–13
INSTALLATION OF RADIO SYSTEM .. 00–00–13
ELECTRICAL SYSTEM 00–00–13
Electrical Parts 00–00–13
Connectors 00–00–13
Terminals 00–00–14
Sensors, Switches, and Relays 00–00–15
Wiring Harness 00–00–15
Fuse 00–00–15
Electrical Troubleshooting Tools 00–00–15
JACKING POSITIONS 00–00–16
VEHICLE LIFT (2 SUPPORTS) AND SAFETY STAND (RIGID RACK) POSITION 00–00–17
Vehicle Lift Positions 00–00–17
Safety Stand Positions 00–00–17
TOWING 00–00–17
Tiedown Hooks 00–00–18
IDENTIFICATION NUMBER LOCATIONS 00–00–18
Vehicle Identification Number (VIN) ... 00–00–18
Chassis Number 00–00–18
Engine Identification Number 00–00–19
Automatic Transaxle Number 00–00–19
ABBREVIATIONS 00–00–19
PRE-DELIVERY INSPECTION 00–00–22
Pre-Delivery Inspection Table 00–00–22
SCHEDULED MAINTENANCE 00–00–23
Scheduled Maintenance Table (Except Canada) 00–00–23
Scheduled Maintenance Table (Canada) 00–00–25

HOW TO USE THIS MANUAL

W6U000W01

Range of Topics

- This manual contains procedures for performing all required service operations. The procedures are divided into the following five basic operations:
  (1) Removal/Installation
  (2) Disassembly/Assembly
  (3) Replacement
  (4) Inspection
  (5) Adjustment

- Simple operations which can be performed easily just by looking at the vehicle (i.e., removal/installation of parts, jacking, vehicle lifting, cleaning of parts and visual inspection) have been omitted.

Service Procedure

Inspection, adjustment

- Inspection and adjustment procedures are divided into steps. Important points regarding the location and contents of the procedures are explained in detail and shown in the illustrations.

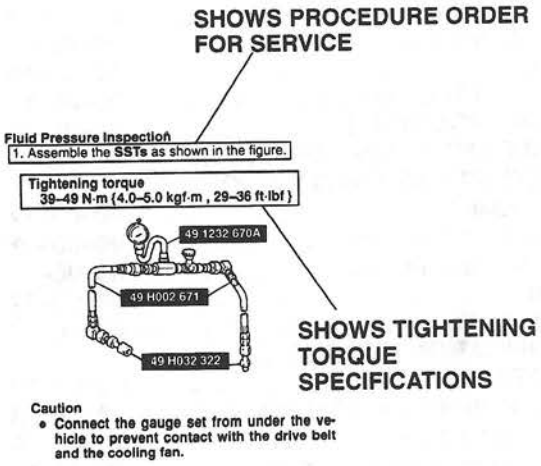

W6U000WA0

Repair procedure

1. Most repair operations begin with an overview illustration. It identifies the components, shows how the parts fit together and describes visual part inspection. However, only removal/installation procedures that need to be performed methodically have written instructions.
2. Expendable parts, tightening torques and symbols for oil, grease, and sealant are shown in the overview illustration. In addition, symbols indicating parts requiring the use of special service tools are also shown.
3. Procedure steps are numbered and the part that is the main point of that procedure is shown in the illustration with the corresponding number. Occasionally, there are important points or additional information concerning a procedure. Refer to this information when servicing the related part.

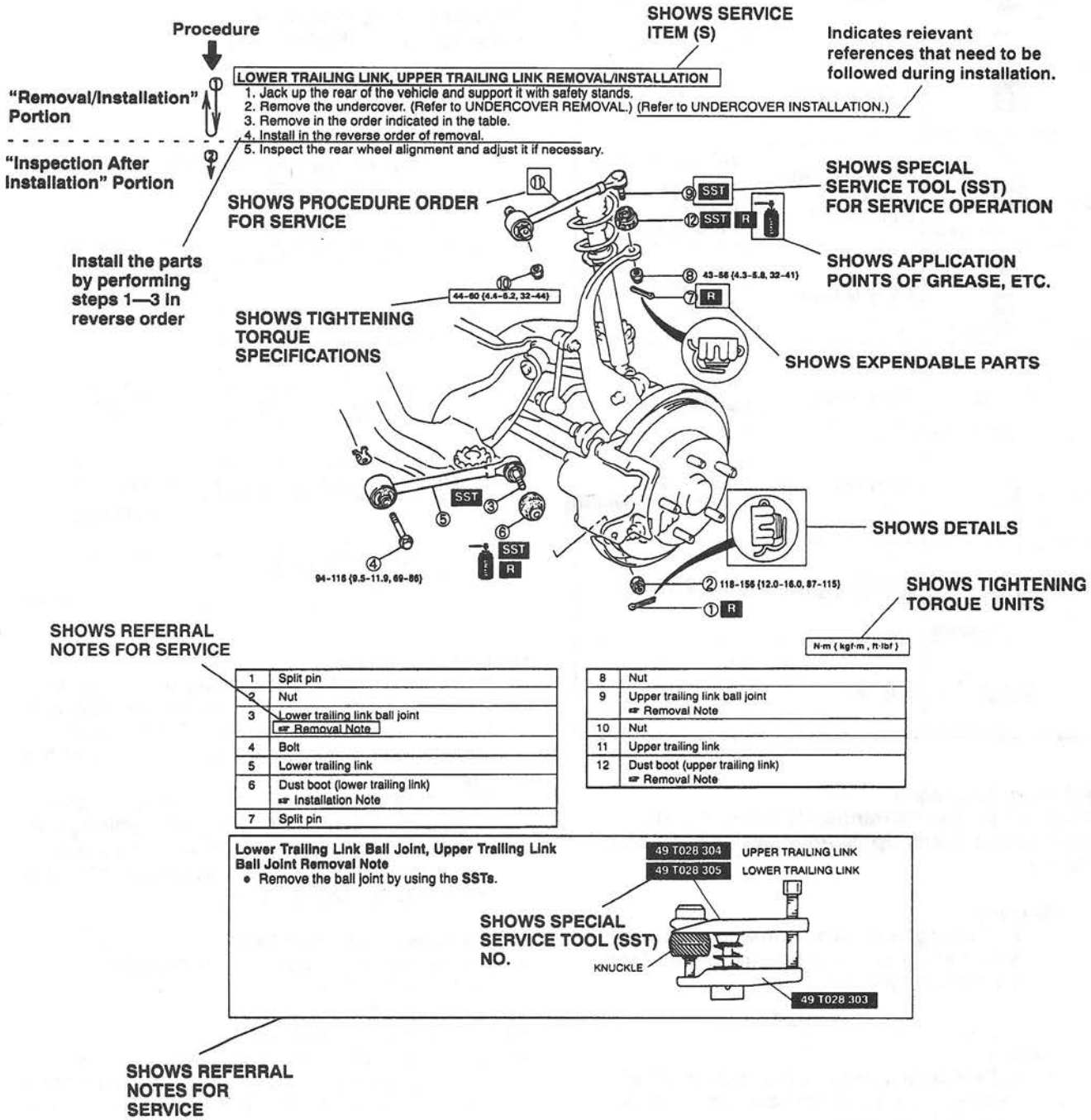

W6U000WA1

Symbols
- There are eight symbols indicating oil, grease, fluids, sealant and **SST** use. These symbols show application points or use of these materials during service.

Symbol	Meaning	Kind
 W6U000WA2	Apply oil	New appropriate engine oil or gear oil
 W6U000WA3	Apply brake fluid	New appropriate brake fluid
 W6U000WA4	Apply automatic transaxle/ transmission fluid	New appropriate automatic transaxle/ transmission fluid
 W6U000WA5	Apply grease	Appropriate grease
 W6U000WA6	Apply sealant	Appropriate sealant
 W6U000WA7	Apply petroleum jelly	Appropriate petroleum jelly
 W6U000WA8	Replace part	O-ring, gasket, etc.
 W6U000WA9	Use SST	Appropriate SST

Advisory Messages
You'll find several **Warnings**, **Cautions**, **Notes**, **Specifications** and **Upper and Lower Limits** in this manual.

Warning
- **A Warning indicates a situation in which serious injury or death could result if the warning is ignored.**

Caution
- **A Caution indicates a situation in which damage to the vehicle could result if the caution is ignored.**

Note
- A **Note** provides added information that will help you to complete a particular procedure.

Specification
- The values indicate the allowable range when performing inspections or adjustments.

Upper and Lower Limits
- The values indicate the upper and lower limits that must not be exceeded when performing inspections or adjustments.

Troubleshooting Procedure
Basic flow of troubleshooting

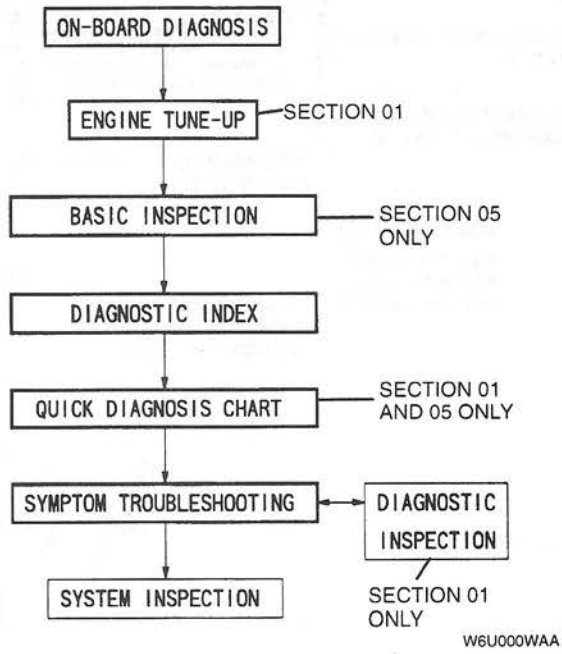

On-board diagnosis
- Diagnostic trouble codes (DTCs) are important hints for repairing malfunctions that are difficult to simulate. Perform the specific DTC diagnostic inspection to quickly and accurately diagnose the malfunction.
- The on-board diagnostic function is used during inspection. When a DTC is shown specifying the cause of a malfunction, continue the diagnostic inspection according to the items indicated by the on-board diagnostic function.

Engine tune-up (section 01)
- Any necessary adjustments are made after starting the engine.

Basic inspection (section 05)
- The basic inspection is performed to quickly narrow down the possible causes of a malfunction regardless of symptoms. Also, basic inspection is performed to locate the area(s) of any malfunction.

Diagnostic index
- The diagnostic index lists the symptoms of specific malfunctions. Select the symptoms related or most closely relating to the malfunction.

Quick diagnosis chart (section 01 and 05)
- The quick diagnosis chart lists diagnosis and inspection procedures to be performed specifically relating to the cause of the malfunction.

Symptom troubleshooting
- Symptom troubleshooting quickly determines the location of the malfunction according to symptom type.

Procedures for Use
Using the basic inspection
- Perform the basic inspection procedure before symptom troubleshooting.
- Perform each step in the order shown.
- The reference column lists the location of the detailed procedure for each basic inspection.
- Although inspections and adjustments are performed according to the reference column procedures, if the cause of the malfunction is discovered during basic inspection, continue the procedures as indicated in the remarks column.

SHOWS INSPECTION ORDER

SHOWS ITEM NAMES FOR DETAILED PROCEDURES

SHOW POINTS REQUIRING ATTENTION BASED ON INSPECTION RESULTS

STEP	INSPECTION		ACTION
1	Turn ignition switch to ON Does hold indicator light (illuminate/go out) correspond to hold switch position (ON/OFF)?	Yes	Go to next step
		No	Perform malfunction diagnosis according to No.26 "HOLD INDICATOR LIGHT DOES NOT ILLUMINATE WHEN HOLD SWITCH IS TURNED ON" or No.27 "HOLD INDICATOR LIGHT ILLUMINATES WHEN HOLD SWITCH IS NOT TURNED ON"
2	Check the ATF color and condition Are ATF color and odor normal?	Yes	Go to next step
		No	Repair or replace any defective parts
3	Perform the line pressure test ☞ MECHANICAL SYSTEM TEST, Line Pressure Test Is line pressure OK?	Yes	Go to next step
		No	Repair or replace any defective parts
4	Perform the stall test ☞ MECHANICAL SYSTEM TEST, Stall Test Is stall speed OK?	Yes	Go to next step
		No	Repair or replace any defective parts
5		Yes	Perform symptom troubleshooting

REFERENCE COLUMN

W6U000WAB

Using the diagnosis index
- The symptoms of the malfunctions are listed in the diagnostic index for symptom troubleshooting.
- The exact malfunction symptoms can be selected by following the index.

No.	TROUBLESHOOTING ITEM	DESCRIPTION
1	Discharged battery	—
2	Will not crank or cranks slowly	—
3	No combustion	Engine cranks at normal speed but shows on sign of firing
4	Combustion observed but engine will not start	Engine shows combustion while cranking but will not continue to run when ignition switch is turned from STA to ON
5	Cranks normal by hard to start	Engine cranks at normal speed but requires excessive cranking time before starting Engine runs normally at idle after started
6	Low idle speed/Engine stalls or vibrates	Engines idles at low speed, stalls, or vibrates when engine is cold, hot, or normal temperature
7	High idle speed Idle speed hard to high	Idle speed excessively high and will not go down after warm-up
8	High idle speed Idle speed hard to lower	Idle speed excessively high and requires time to be lowered to normal speed after warm-up
9	Rough idle/Engine stalls when E/L, P/S, or A/C ON	Engine runs normally at idle with no load but stalls or vibrates excessively when load (E/L, P/S, or A/C) is ON
10		Engine runs normally at idle but stalls or vibrates excessively during N–D shift
		—

W6U000WAC

Using the quick diagnosis chart

- The chart lists the relation between the symptom and the cause of the malfunction.
- The chart is effective in quickly narrowing down the relation between symptom and cause of the malfunction. It also specifies the area of the common cause when multiple malfunction symptoms occur.
- The appropriate diagnostic inspection relating to malfunction cause as specified by the symptoms can be selected by looking down the diagnostic inspection column of the chart.

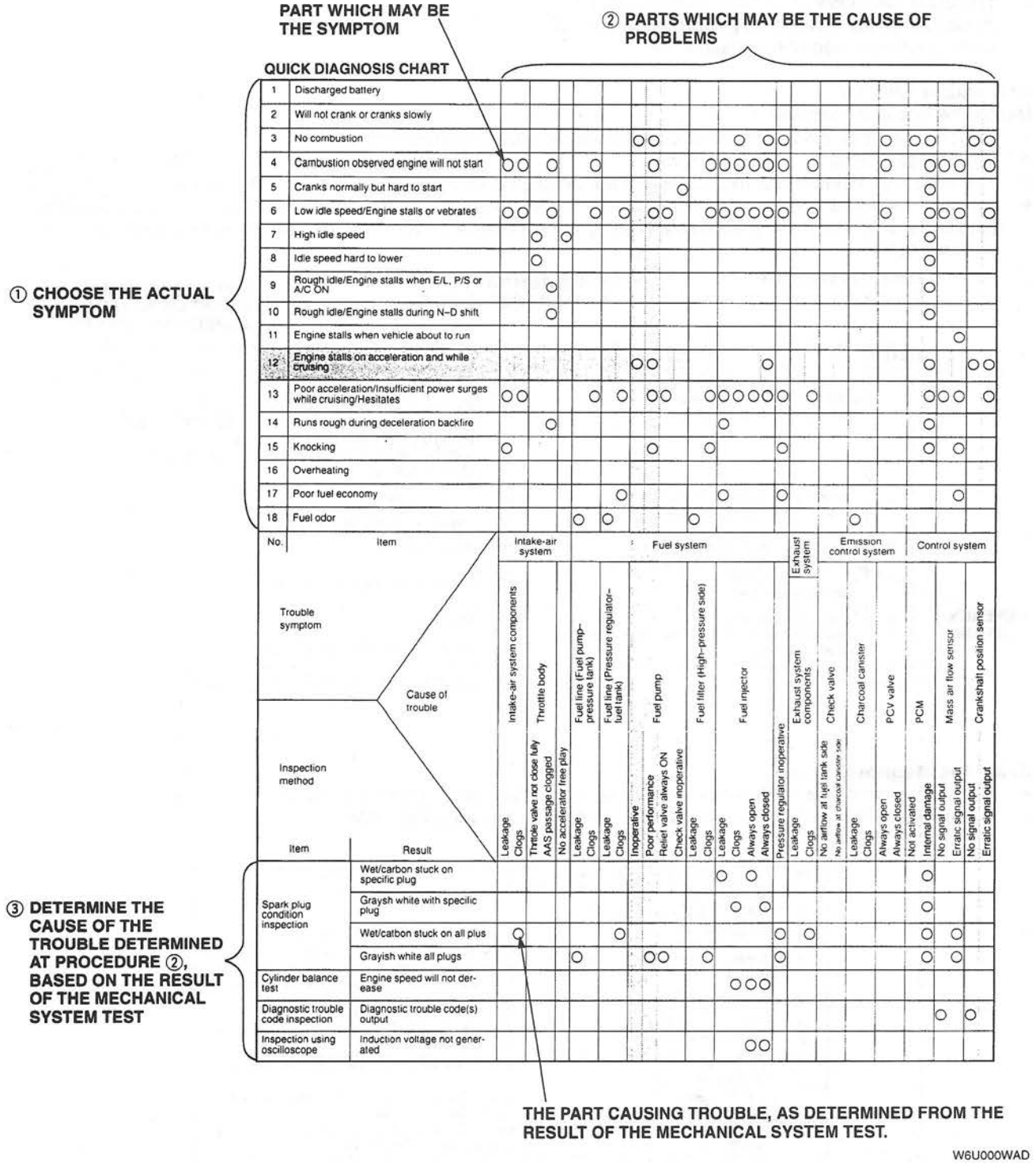

W6U000WAD

Using the symptom troubleshooting

- Symptom troubleshooting shows diagnostic procedures, inspection methods, and proper action to take for each trouble symptom.

TROUBLESHOOTING HINTS describes possible point of malfunction.

TROUBLE SYMPTOM

9	Engine stalls		
Troubleshooting hints • Constant application of torque converter clutch piston			
STEP	INSPECTION		ACTION
1	Does the vehicle shake at shift point as well as at other points when decelerating?	Yes	Troubleshoot according to "Vehicle vibrates back and forth or engine stalls during deceleration".
		No	Go to step 2.
2	Check the voltage at the following powertrain control module terminal. • Brake switch signal ☞ 01–40 POWERTRAIN CONTROL MODULE (PCM) INSPECTION Is terminal voltage OK?	Yes	Go to step 3.
		No	Carry out the stall test. ☞ 05–17 MECHANICAL SYSTEM TEST, Stall Test, Stall test procedure
3	Does torque converter clutch solenoid valve voltage at powertrain control module terminal measure 0 V? ☞ 01–40 POWERTRAIN CONTROL MODULE (PCM) INSPECTION	Yes	Go to step 4.
		No	Check for poor connection of the connectors from powertrain control module to torque converter clutch solenoid valve.
4	Check if torque converter clutch solenoid valve is sticking. Is solenoid valve OK?	Yes	Go to step 5.
		No	Replace torque converter clutch solenoid valve.
5	Overhaul the AT… operation of torque con…	Yes	Go to step 6.
		No	Repair or replace torque converter clutch control valve or control valve body.
			…ace the torque converter.

STEP shows the order of troubleshooting.

INSPECTION describes the method to quickly determine the failed part.

Reference item(s) for additional information to perform INSPECTION.

ACTION describes the appropriate action to take (Yes/No) based INSPECTION result.

Reference item(s) to perform ACTION.

W6U000WAE

Text Sequence

- The text sequence is indicated by the arrows shown below.

Example:

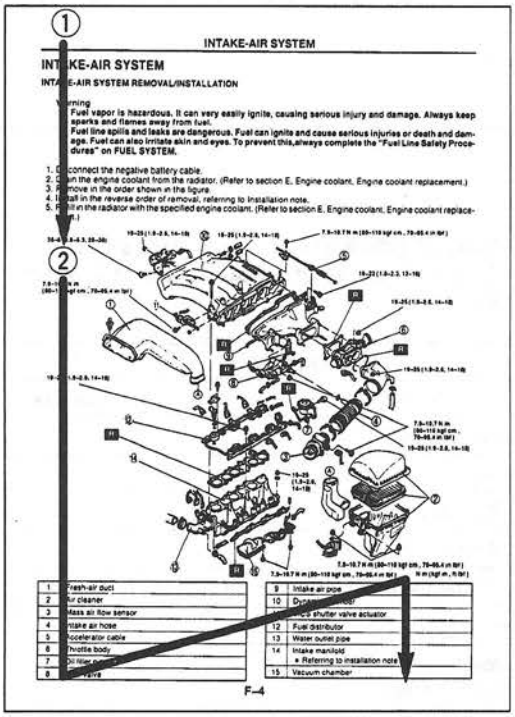

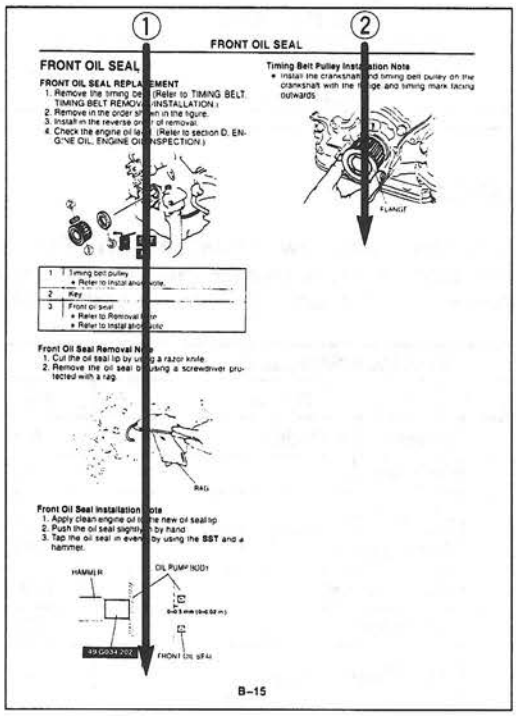

W6U000WAF

UNITS

W6U000W02

Electrical current	A (ampere)
Electric potential	V (volt)
Electric power	W (watt)
Length	mm (millimeter)
	in (inch)
Negative pressure	kPa (kilo pascal)
	mmHg (millimeters of mercury)
	inHg (inches of mercury)
Positive pressure	kPa (kilo pascal)
	kgf/cm^2 (kilogram force per square centimeter)
	psi (pounds per square inch)
Resistance	Ω (ohm)
Torque	N·m (Newton meter)
	kgf·m (kilogram force per meter)
	kgf·cm (kilogram force per centimeter)
	ft·lbf (foot pound)
	in·lbf (inch pound)
Volume	L (liter)
	US qt (U.S. quart)
	Imp qt (Imperial quart)
	ml (milliliter)
	cc (cubic centimeter)
	cu in (cubic inch)
	fl oz (fluid ounce)
Weight	g (gram)
	oz (ounce)

Conversion to SI Units (Système International d'Unités)

- All numerical values in this manual are based on SI units. Numbers shown in conventional units are converted from these values.

Rounding Off

- Converted values are rounded off to the same number of places as the SI unit value. For example, if the SI unit value is 17.2 and the value after conversion is 37.84, the converted value will be rounded off to 37.8.

Upper and Lower Limits

- When the data indicates upper and lower limits, the converted values are rounded down if the SI unit value is an upper limit and rounded up if the SI unit value is a lower limit. Therefore, converted values for the same SI unit value may differ after conversion. For example, consider 2.7 kgf/cm^2 in the following specifications:

  210—260 kPa {2.1—2.7 kgf/cm^2, 30—38 psi}
  270—310 kPa {2.7—3.2 kgf/cm^2, 39—45 psi}

- The actual converted values for 2.7 kgf/cm^2 are 264 kPa and 38.4 psi. In the first specification, 2.7 is used as an upper limit, so the converted values are rounded down to 260 and 38. In the second specification, 2.7 is used as a lower limit, so the converted values are rounded up to 270 and 39.

SAE STANDARDS

W6U000W03

- In accordance with new regulations, SAE (Society of Automotive Engineers) standard names and abbreviations are now used in this manual. The table below lists the names and abbreviations that have been used in Mazda manuals up to now and their SAE equivalents.

Previous Standard		New Standard		
Abbr.	**Name**	**Abbr.**	**Name**	**Remark**
—	Accelerator Pedal	AP	Accelerator Pedal	
—	Air Cleaner	ACL	Air Cleaner	
—	Air Conditioning	A/C	Air Conditioning	
—	Airflow Meter	VAF	Volume Air Flow Sensor	
—	Airflow Sensor	MAF	Mass Air Flow Sensor	
—	Alternator	GEN	Generator	
—	ATF Thermosensor	—	Transmission (Transaxle) Fluid Temperature Sensor	
—	Atmospheric Pressure	BARO	Barometric Pressure	
V_B	Battery Voltage	B+	Battery Positive Voltage	

Previous Standard		New Standard		
Abbr.	Name	Abbr.	Name	Remark
—	Catalytic Converter	OC	Oxidation Catalytic Converter	
		TWC	Three Way Catalytic Converter	
		WU–TWC	Warm Up Three Way Catalytic Converter	Directly connected to exhaust manifold
—	Circuit Opening Relay	FPR	Fuel Pump Relay	In some models, there is a fuel pump relay that controls pump speed. That relay is now called the fuel pump relay (speed).
—	Clutch Position	CPP	Clutch Pedal Position	
—	Crank Angle Sensor	CMP	Camshaft Position Sensor	
—	Crank Angle Sensor 2	CKP	Crankshaft Position Sensor	
—	Diagnosis Connector	DLC	Data Link Connector	
—	Diagnosis/Self-Diagnosis	OBD	On-Board Diagnostic	
—	Direct Ignition	DLI	Distributorless Ignition	
—	EC-AT Control Unit	TCM	Transmission (Transaxle) Control Module	
EGI	Electronic Gasoline Injection System	CIS	Continuous Fuel Injection System	
—	Electronic Spark Ignition	EI	Electronic Ignition	Controlled by the ECM/PCM
ECU	Engine Control Unit	PCM	Powertrain Control Module	Device that controls engine and powertrain
		ECM	Engine Control Module	
—	Engine Modification	EM	Engine Modification	
—	Engine RPM Signal	—	Engine Speed Input Signal	
—	Evaporative Emission	EVAP	Evaporative Emission	
—	Exhaust Gas Recirculation	EGR	Exhaust Gas Recirculation	
—	Fan Control	FC	Fan Control	
—	Feedback System	CLS	Closed Loop System	
—	Flexible Fuel	FF	Flexible Fuel	
—	Fuel Pump	FP	Fuel Pump	
—	Fully Closed	CTP	Closed Throttle Position	
—	Fully Open	WOT	Wide Open Throttle	
—	Ground/Earth	GND	Ground	
—	IC Regulator	VR	Voltage Regulator	
—	Idle Speed Control	IAC	Idle Air Control	
—	Idle Switch	—	Closed Throttle Position Switch	
—	Igniter	ICM	Ignition Control Module	
—	Inhibitor	TR	Transmission (Transaxle) Range	
—	Intake Air Pressure	MAP	Manifold Absolute Pressure	
—	Intake Air Thermo	IAT	Intake Air Temperature	
—	Intercooler	CAC	Charge Air Cooler	
—	Knock Sensor	KS	Knock Sensor	
—	Line Pressure Solenoid Valve	—	Pressure Control Solenoid	
—	Lock-up	TCC	Torque Converter Clutch	
—	Malfunction Indicator Light	MIL	Malfunction Indicator Lamp	
—	Multiport Fuel Injection	MFI	Multiport Fuel Injection	
—	Open Loop	OL	Open Loop	
—	Overdrive	4GR	Fourth Gear	

Previous Standard		New Standard		
Abbr.	Name	Abbr.	Name	Remark
—	Oxygen Sensor	HO2S	Heated Oxygen Sensor	With heater
		O2S	Oxygen Sensor	
—	Park/Neutral Range	PNP	Park/Neutral Position	
—	Power Steering Pressure	PSP	Power Steering Pressure	
—	Pulse Generator	—	Input/Turbine Speed Sensor	
—	Reed Valve	SAPV	Secondary Air Pulse Valve	
—	Secondary Air Injection System	PAIR	Pulsed Secondary Air Injection	Pulsed injection
		AIR	Secondary Air Injection	Inject with compressor
—	Sequential Fuel Injection	SFI	Sequential Multipoint Fuel Injection	
—	Service Code(s)	DTC	Diagnostic Trouble Code(s)	
—	Spark Ignition	DI	Distributor Ignition	
—	Stoplight Switch	—	Brake Switch	
—	Test Mode	DTM	Diagnostic Test Mode	Diagnostic trouble codes depend on the diagnostic test mode
—	Throttle Body	TB	Throttle Body	
—	Throttle Sensor	TP	Throttle Position Sensor	
—	Turbocharger	TC	Turbocharger	
—	Vehicle Speed Sensor	VSS	Vehicle Speed Sensor	
—	Vehicle Speed Sensor 1	—	Output Speed Sensor	
—	Water Thermo	ECT	Engine Coolant Temperature	
—	1–2 Shift Solenoid Valve	—	Shift Solenoid A	
	Shift + A Solenoid Valve			
—	2–3 Shift Solenoid Valve	—	Shift Solenoid B	
	Shift + B Solenoid Valve			
—	3–4 Shift Solenoid Valve	—	Shift Solenoid C	
—	3rd Gear	3GR	Third Gear	
—	—	—	Incorrect Gear Ratio	

FUNDAMENTAL PROCEDURES

W6U000W04

Protection of the Vehicle

- Always be sure to cover fenders, seats and floor areas before starting work.

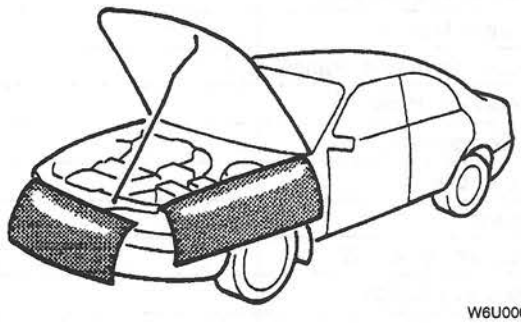

W6U000WAG

Preparation of Tools and Mesuring Equipment

- Be sure that all necessary tools and measuring equipment are available before starting any work.



W6U000WAH

Special Tools
- Use special tools when they are required.

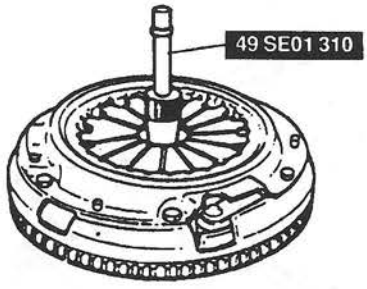

W6U000WAJ

Disconnection of the Negative Battery Cable
- Before beginning any work, turn the ignition switch to LOCK, disconnect the negative battery cable and then wait for more than 1 minute to allow the backup power supply of the SAS unit to deplete its stored power.

Removal of Parts
- While correcting a problem, also try to determine its cause. Begin work only after first learning which parts and subassemblies must be removed and disassembled for replacement or repair. After removing the part, plug all holes and ports to prevent foreign material from entering.



W6U000WAK

Disassembly
- If the disassembly procedure is complex requiring many parts to be disassembled, all parts should be disassembled in a way that will not affect their performance or external appearance and identified so reassembly can be performed easily and efficiently.

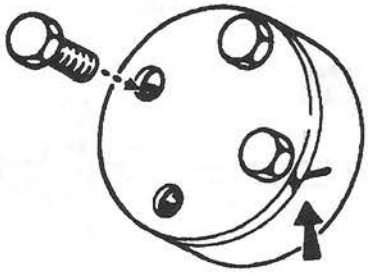

W6U000WAL

Inspection During Removal, Disassembly
- When removed, each part should be carefully inspected for malfunctioning, deformation, damage and other problems.

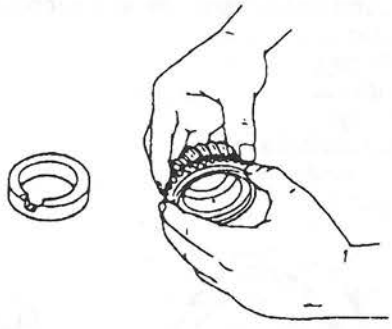

W6U000WAM

Arrangement of Parts
- All disassembled parts should be carefully arranged for reassembly.
- Be sure to separate or otherwise identify the parts to be replaced from those that will be reused.



W6U000WAN

Cleaning of Parts
- All parts to be reused should be carefully and thoroughly cleaned in the appropriate method.

Warning
- **Using compressed air can cause dirt and other particles to fly out causing injury to the eyes. Wear protective eye wear whenever using compressed air.**



W6U000WAP

Reassembly

- Standard values, such as torques and certain adjustments, must be strictly observed in the reassembly of all parts.
  If removed, these parts should be replaced with new ones:
  - Oil seals
  - Gaskets
  - O-rings
  - Lockwashers
  - Cotter pins
  - Nylon nuts

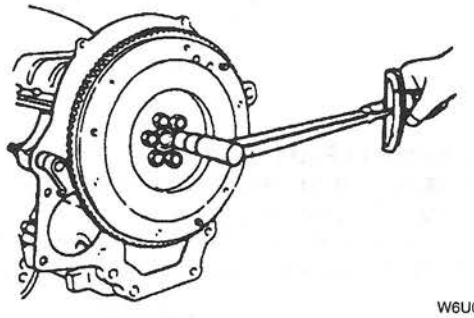

W6U000WAQ

Depending on location:

- Sealant and gaskets, or both, should be applied to specified locations. When sealant is applied, parts should be installed before sealant hardens to prevent leaks.
- Oil should be applied to the moving components of parts.
- Specified oil or grease should be applied at the prescribed locations (such as oil seals) before reassembly.

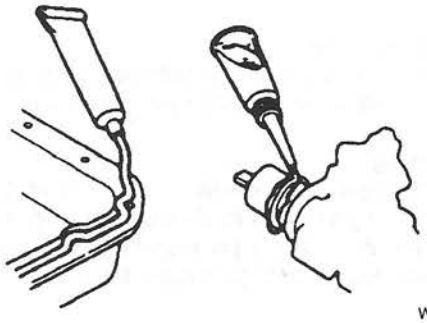

W6U000WAR

Adjustments

- Use suitable gauges and testers when making adjustments.



W6U000WAS

Rubber Parts and Tubing

- Prevent gasoline or oil from getting on rubber parts or tubing.

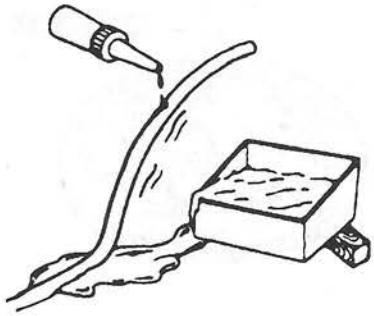

W6U000WAT

Hose Clamps

- When reinstalling, position the hose clamp in the original location on the hose and squeeze the clamp lightly with large pliers to ensure a good fit.

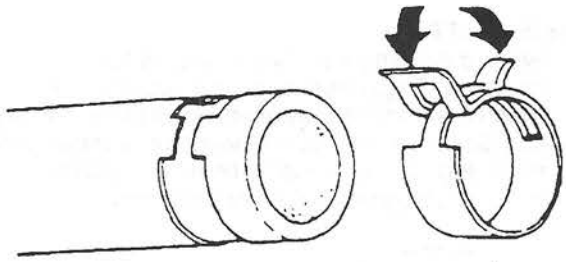

W6U000WAU

Torque Formulas

- When using a torque wrench-**SST** combination, the written torque must be recalculated due to the extra length that the **SST** adds to the torque wrench. Recalculate the torque by using the following formulas. Choose the formula that applies to you.

Torque Unit	Formula
N·m	N·m × [L/(L+A)]
kgf·m	kgf·m × [L/(L+A)]
kgf·cm	kgf·cm × [L/(L+A)]
ft·lbf	ft·lbf × [L/(L+A)]
in·lbf	in·lbf × [L/(L+A)]

A : The length of the **SST** past the torque wrench drive.
L : The length of the torque wrench.

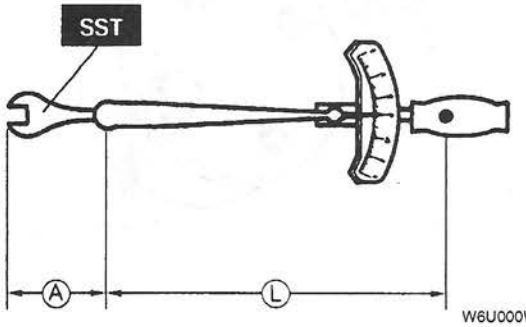

W6U000WAV

Vise

- When using a vise, put protective plates in the jaws of the vise to prevent damage to parts.

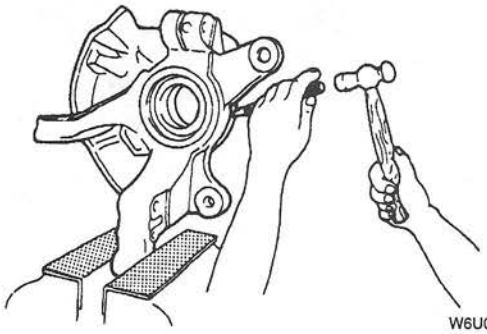

W6U000WAW

Dynamometer

- When test-running a vehicle on a dynamometer:
  - Place a fan, preferably a vehicle-speed proportional type, in front of the vehicle.
  - Connect an exhaust gas ventilation unit.
  - Cool the exhaust pipes with a fan.
  - Keep the area around the vehicle uncluttered.
  - Watch the water temperature gauge.

Note

- When the vehicle is on a chassis roller and only the front wheels rotate, the ABS warning light may illuminate. Refer to 04–01 PRECAUTION to turn off the warning light.

INSTALLATION OF RADIO SYSTEM

W6U000W05

If a radio system is installed improperly or if a high-powered type is used, the CIS and other systems may be affected. When the vehicle is to be equipped with a radio, observe the following precautions:

1. Install the antenna at the farthest point from control modules.
2. Install the antenna feeder as far as possible from the control module harnesses.
3. Ensure that the antenna and feeder are properly adjusted.
4. Do not install a high-powered radio system.

ELECTRICAL SYSTEM

W6U000W06

Electrical Parts
Battery cable

- Before disconnecting connectors or removing electrical parts, disconnect the negative battery cable.

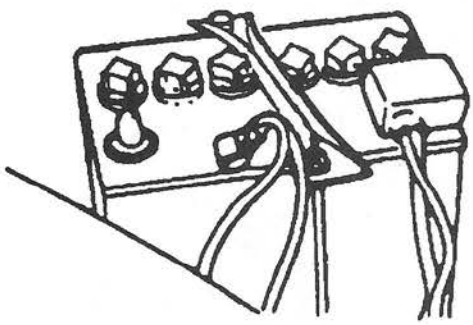

W6U000WAX

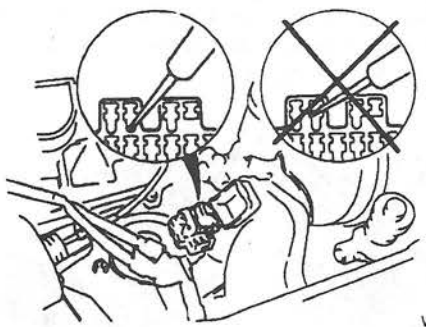

W6U000WAY

Disconnecting connectors

- When disconnecting two connectors, grasp the connectors, not the wires.

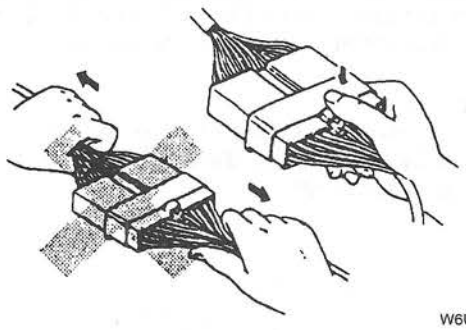

W6U000WAZ

Connectors
Data link connector

- Insert the probe into the service hole when connecting a jumper wire to the data link connector.

Caution

- **Inserting a jumper wire probe into the data link connector terminal may damage the terminal.**

- Connectors can be disconnected by pressing or pulling the lock lever as shown.

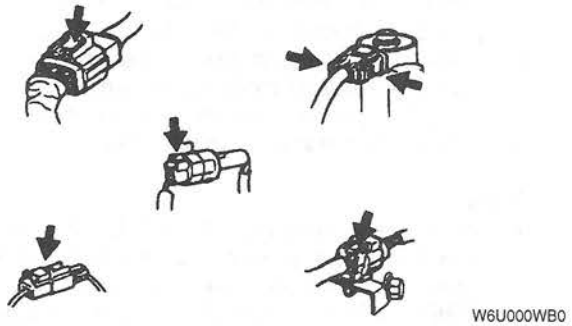

W6U000WB0

Locking connector

- When locking connectors, listen for a click indicating they are securely locked.

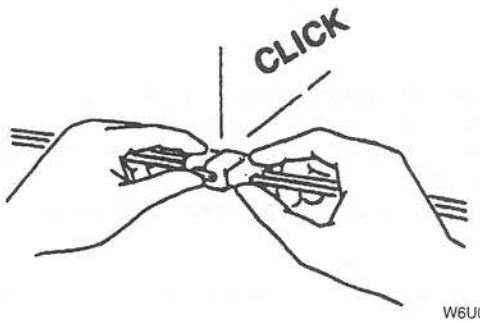

W6U000WB1

Inspection

- When a tester is used for checking continuity or measuring voltage, insert the tester probe from the wiring harness side.

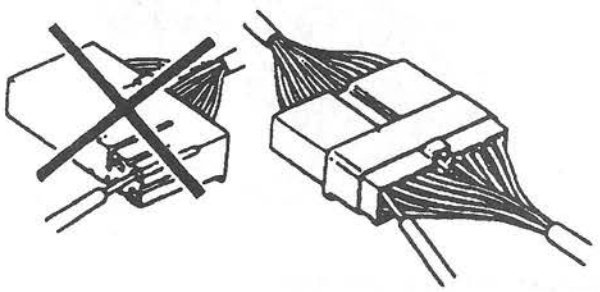

W6U000WB2

- Check the terminals of waterproof connectors from the connector side since they cannot be accessed from the wiring harness side.

Caution

- **To prevent damage to the terminal, wrap a thin wire around the lead before inserting into terminal.**

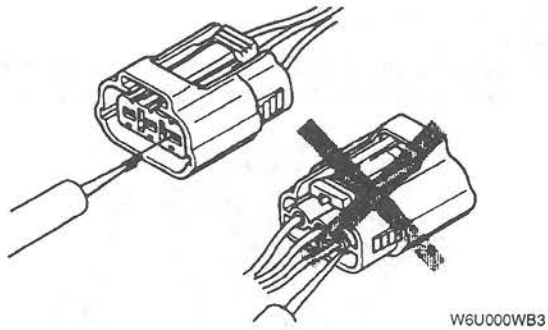

W6U000WB3

Terminals
Inspection

- Pull lightly on individual wires to check that they are secured in the terminal.

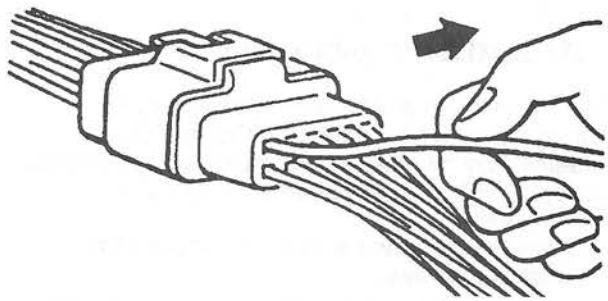

W6U000WB4

Replacement

- Use the appropriate tools to remove a terminal as shown. When installing a terminal, be sure to insert it until it locks securely.
- Insert a thin piece of metal from the terminal side of the connector and with the terminal locking tab pressed down, pull the terminal out from the connector.

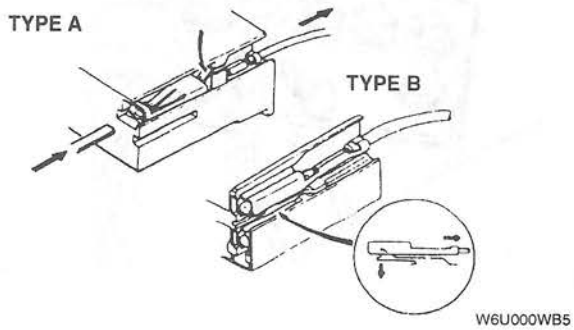

W6U000WB5

Sensors, Switches, and Relays

- Handle sensors, switches and relays carefully. Do not drop them or strike them against other objects.

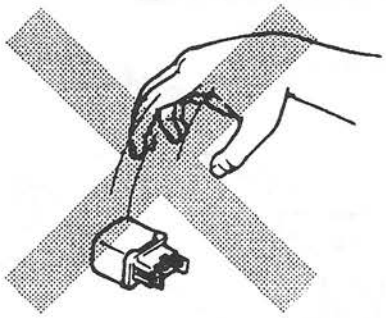

W6U000WB6

Wiring Harness

Wiring color codes

- Two-color wires are indicated by a two-color code symbol.
- The first letter indicates the base color of the wire and the second the color of the stripe.

CODE	COLOR		CODE	COLOR
B	Black		O	Orange
BR	Brown		P	Pink
G	Green		R	Red
GY	Gray		V	Violet
L	Blue		W	White
LB	Light Blue		Y	Yellow
LG	Light Green			

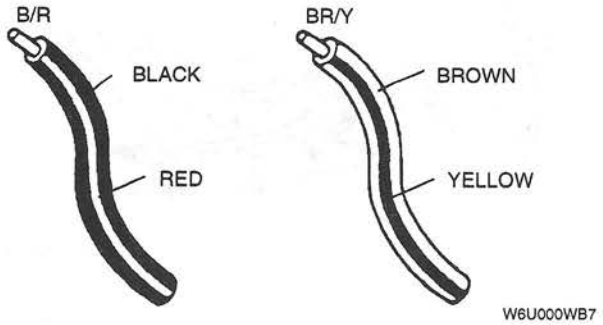

W6U000WB7

Fuse

Replacement

- When replacing a fuse, be sure to replace it with one of the same capacity. If a fuse fails again, the circuit probably has a short and the wiring should be checked.
- Be sure the negative battery terminal is disconnected before replacing a main fuse.

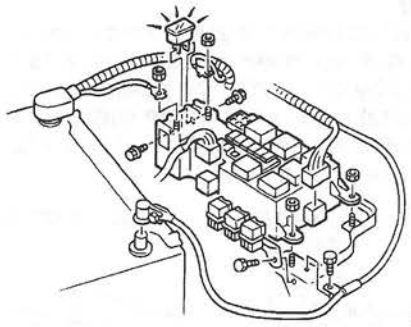

W6U000WB8

- When replacing a pullout fuse, use the fuse puller.

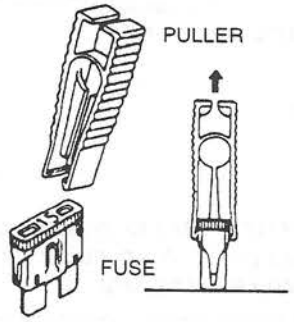

W6U000WB9

Electrical Troubleshooting Tools

Jumper wire

- A jumper wire is used to create a temporary circuit. Connect the jumper wire between the terminals of a circuit to bypass a switch.

Caution

- **Do not connect a jumper wire from the power source line to a body ground. This may cause burning or other damage to wiring harnesses or electronic components.**

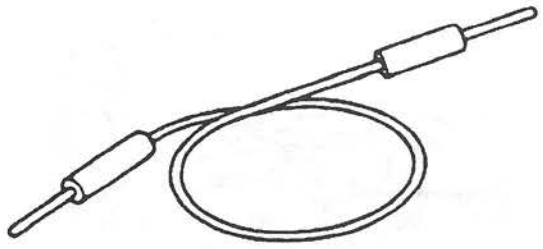

W6U000WBB

Voltmeter

- The DC voltmeter is used to measure circuit voltage. A voltmeter with a range of 15 V or more is used by connecting the positive (+) probe (red lead wire) to the point where voltage will be measured and the negative (–) probe (black lead wire) to a body ground.

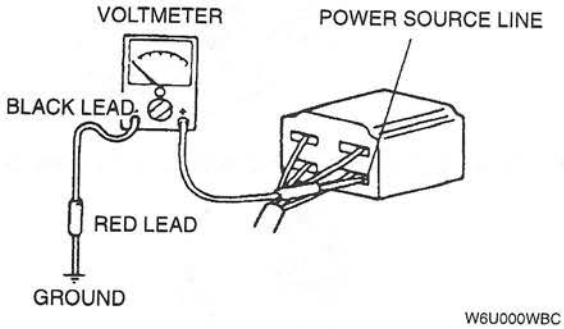

W6U000WBC

Ohmmeter

- The ohmmeter is used to measure the resistance between two points in a circuit and to check for continuity and short circuits.

Caution

- **Do not connect the ohmmeter to any circuit where voltage is applied. This will damage the ohmmeter.**

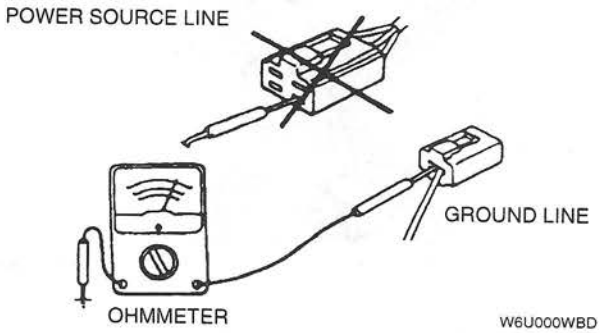

W6U000WBD

JACKING POSITIONS

W6U000W07

Warning

- **Improperly jacking a vehicle is dangerous. The vehicle can slip off the jack and cause serious injury. Use only the correct front and rear jacking positions and block the wheels.**

Use safety stands to support the vehicle after it has been lifted.

Front

- At the center of the crossmember

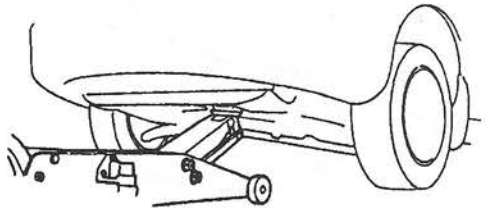

W6U000WBE

Rear

- At the center of the crossmember

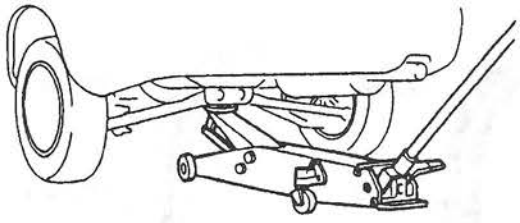

W6U000WBF

VEHICLE LIFT (2 SUPPORTS) AND SAFETY STAND (RIGID RACK) POSITION

W6U000W08

Vehicle Lift Positions

Front

- Both sides of the vehicle, on side sills.

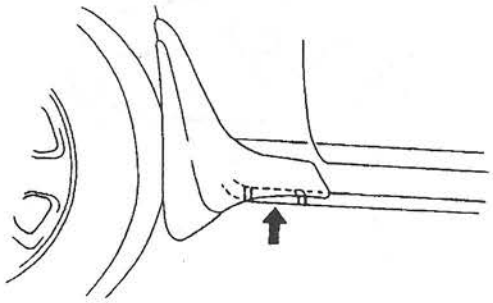

W6U000WBG

Rear

- Both sides of the vehicle, on side sills.

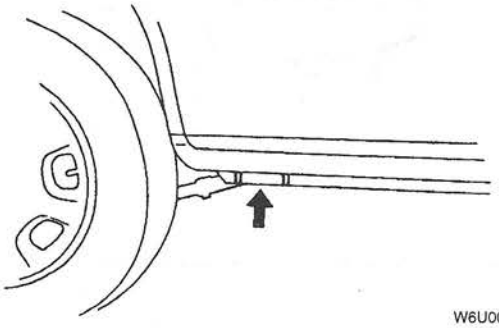

W6U000WBH

Safety Stand Positions

Front

- Both sides of the vehicle, on side sills.

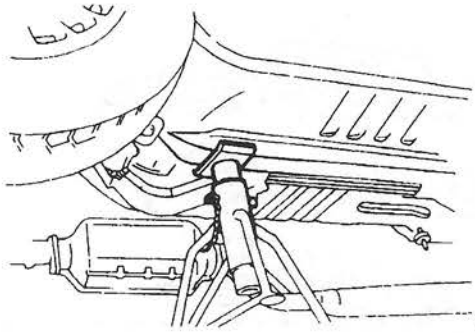

W6U000WBJ

Rear

- Both sides of the vehicle, on side sills.

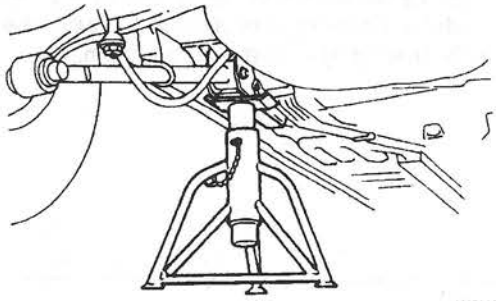

W6U000WBK

TOWING

W6U000W09

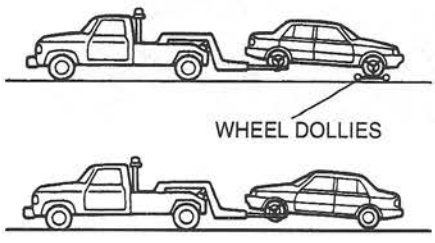

W6U000WBL

Proper lifting and towing are necessary to prevent damage to the vehicle. State and local laws must be followed.

A towed vehicle usually should have its front wheels off the ground. If excessive damage or other conditions prevent this, use wheel dollies.

When towing with the rear wheels on the ground, release the parking brake.

Caution

- **Do not tow the vehicle backward with driving wheels on the ground. This may cause internal damage to the transaxle.**

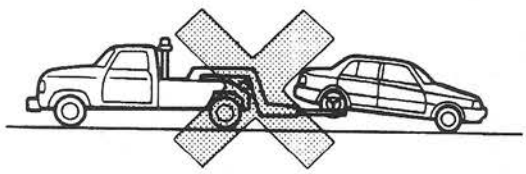

W6U000WBM

Caution

- **Do not tow with sling-type equipment. This could damage your vehicle. Use wheel-lift or flatbed equipment.**

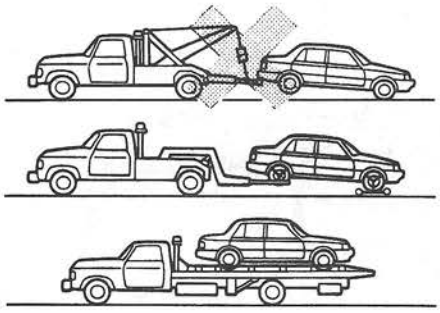

W6U000WBN

Caution

- **Do not use the hook loops under the front and rear bumpers for towing. They are designed ONLY for tying down the vehicle when it's being transported. Using them for towing will damage the bumper.**

Tiedown Hooks
Front

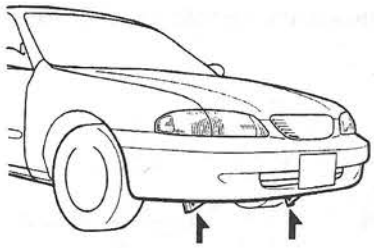

W6U000WBP

Rear

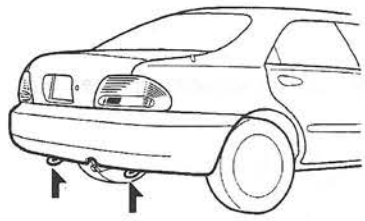

W6U000WBQ

IDENTIFICATION NUMBER LOCATIONS

W6U000W10

Vehicle Identification Number (VIN)

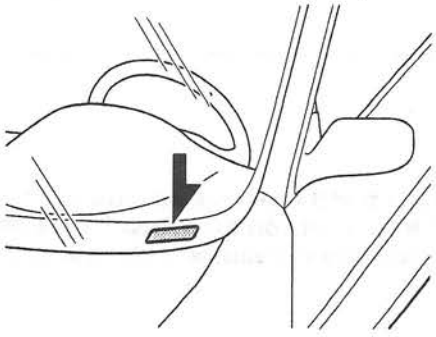

W6U000WBV

Chassis Number

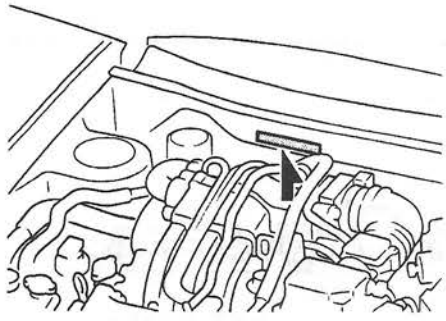

W6U000WBR

Engine Identification Number

FS ENGINE

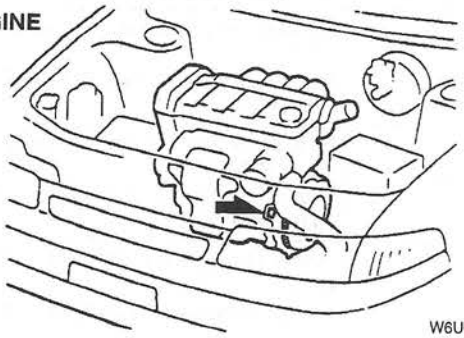

W6U000WBS

KL ENGINE

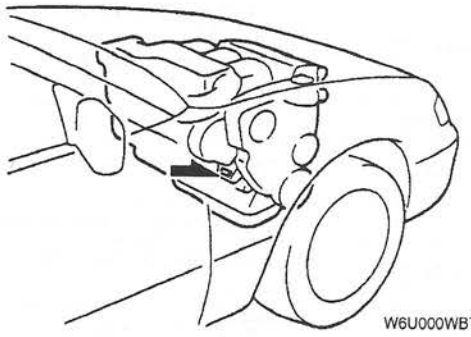

W6U000WBT

Automatic Transaxle Number

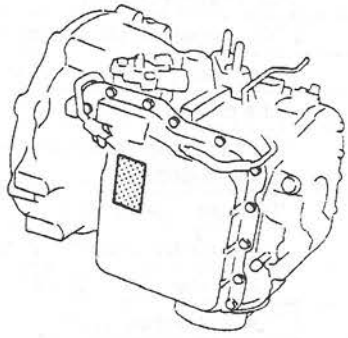

W6U000WBU

ABBREVIATIONS

W6U000W11

ABS	Antilock brake system
ACC	Accessories
ACCS	A/C switch
ACD	A/C
ACON	A/C control
ACP V	Refrigerant pressure switch signal voltage
ACT	Intake air temperature
ALR	Automatic locking retractor
ATF	Automatic transaxle fluid
ATFT	Transaxle fluid temperature
ATX	Automatic transaxle
AV	Pressure reduction valve
BARO	Barometric pressure
BLR	Blower
BLWMTR	Fan switch
BOO	Brake on/off
BUS+	Diagnostic trouble code input
BUS–	Diagnostic trouble code output
CANP1	Purge control
CAS+	NE+
CAS–	NE–
CASEGND	Ground
CCS	Pressure of 3–2 timing/coasting clutch
CDCV	Canister drain cut valve
CD1	Ignition #1, #4
CD2	Ignition #2, #5

CD3	Ignition #3, #6
CID	Cylinder identification
CID+	Cylinder identification (+)
CID–	Cylinder identification (–)
CM	Control module
CW	Code word
COM	Communication (with immobilizer)
CPP/PNP	In gear (not in neutral, not in park, clutch pedal not depressed)
CTO	Engine speed
D range	Drive range
DEF	Defroster
DRIVECT	Total number of OBD II drive mode completed
DRL	Daytime running light
DRLMP	Daytime running lights
DTC CNT	Total number of diagnostic trouble codes (DTC) stored in PCM (Include pending codes)
ECT V	Engine coolant temperature signal voltage
EDF	Cooling fan control
EGR	Barometric pressure or EGR pressure
EGRAP	Barometric pressure/EGR boost
EGRBARO	EGR boost solenoid valve
EGRCD1	EGR valve (Coil #1)
EGRCD2	EGR valve (Coil #2)

EGRCD3	EGR valve (Coil #3)
EGRCD4	EGR valve (Coil #4)
EGRCS	EGR boost switching control
ELR	Emergency locking retractor
EPC	Line pressure
EPC V	Electric pressure control solenoid valve signal voltage
EV	Pressure retention valve
EVAPCPF	Purge control system output circuit failed
EVAPCV	CDCV operation condition
EVAPCVF	CDCV failed detected
EVAPPDC	Purge solenoid valve duty cycle
EX	Exhaust
FEPS	Flash EP POM supply
FLI	Fuel level
FLI V	Fuel gage sender unit signal voltage
FP	Fuel pump operation condition
FPA	Fuel pump relay
FPF	Fuel pump circuit failed
FPRC	PRC solenoid valve
FTL	Fuel level
FTP V	Fuel tank pressure sensor signal voltage
FUELPW1	Fuel injector duration time (FS) Fuel injector duration time (RH) (KL)
FUELPW2	Fuel injector duration time (LH)
GEAR	Selector lever position
HDL	Headlight
HDLMP	Headlight switch
HEDF	Condenser fan control
HEGOF	Heated oxygen sensor (Front) (FS)
HEGOHTLF	Heated oxygen sensor heater control (Front LH)
HEGOHTLR	Heated oxygen sensor heater control (Rear)
HEGOHTRF	Heated oxygen sensor heater control (Front RH)
HEGOHTRR	Heated oxygen sensor heater control (Middle)
HEGOLF	Heated oxygen sensor (Front LH)
HEGOLR	Heated oxygen sensor (Rear)
HEGOR	Heated oxygen sensor (Rear) (FS)
HEGORF	Heated oxygen sensor (Front RH)
HEGORR	Heated oxygen sensor (Middle)
HEPC	Pressure control solenoid
HFC	Condenser fan
HFCF	Condenser fan circuit failed
HGND	Ground (for California)
HI	High
HLUP	TCC control
HSS1	Shift solenoid A
HSS2	Shift solenoid B
HSS3	Shift solenoid C
HSS5	3–2 timing solenoid valve
HTR11	Heated oxygen sensor heater (Front) (FS) Heated oxygen sensor heater (Front RH) (KL)
HTR11F	Heated oxygen sensor heater (Front) failed (FS) Heated oxygen sensor heater (Front RH) failed (KL)
HTR12	Heated oxygen sensor heater (Rear) (FS) Heated oxygen sensor heater (Middle) (KL)
HTR12F	Heated oxygen sensor heater (Rear) failed (FS) Heated oxygen sensor heater (Middle) failed (KL)
HTR21	Heated oxygen sensor heater (Front LH)
HTR21F	Heated oxygen sensor heater (Front LH) failed
HTR22	Heated oxygen sensor heater (Rear)
HTR22F	Heated oxygen sensor heater (Rear) failed
HU	ABS hydraulic unit
IACF	IAC system failed
IAT V	Intake air temperature sensor signal voltage
IG	Ignition
IN	Intake
INJ#1	Fuel injector No.1 control
INJ#2	Fuel injector No.2 control
INJ#3	Fuel injector No.3 control
INJ#4	Fuel injector No.4 control
INJ#5	Fuel injector No.5 control
INJ#6	Fuel injector No.6 control
INJ1F	Fuel injector #1 circuit failed
INJ2F	Fuel injector #2 circuit failed
INJ3F	Fuel injector #3 circuit failed
INJ4F	Fuel injector #4 circuit failed
INJ5F	Fuel injector #5 circuit failed
INJ6F	Fuel injector #6 circuit failed
INT	Intermittent
ISC – BPA	Idle air control (Negative)
ISCP	Idle air control (Positive)
IU	Immobilizer unit
KAM	Keep alive memory
KAPWR	Back-up power supply
KOEO	Key on engine off
KOER	Key on engine running
KS	Knocking
LF	Left front
LFC	Cooling fan
LFCF	Cooling fan circuit failed
LH	Left hand

LO	Low
LOAD	Calculated engine load value
LONGFT1	Long fuel trim (FS) Long fuel trim (RH) (KL)
LONGFT2	Long fuel trim (LH)
LOOP	Feedback control condition
MAF V	Mass air flow sensor signal voltage
MAFRTN	Mass air flow sensor signal return
MAX	Maximum
MILF	MIL circuit failed
MISF	Misfiring
MMI	Engine condition
MMR	Torque reduction request
MTX	Manual transaxle
N position	Neutral transaxle
NDS (MTX), PNP (ATX)	Load/no load distinction
O/D	Overdrive
ODF	O/D OFF indicator light
ODS	O/D OFF switch (FS), HOLD switch (KL)
OFF	Switch off
ON	Switch on
O2S11	Heated oxygen sensor (Front) signal voltage (FS) Heated oxygen sensor (Front RH) signal voltage (KL)
O2S12	Heated oxygen sensor (Rear) signal voltage (FS) Heated oxygen sensor (Middle) signal voltage (KL)
O2S21	Heated oxygen sensor (Front LH) signal voltage
O2S22	Heated oxygen sensor (Rear) signal voltage
P position	Park position
PCV	Positive crankcase ventilation
P/S	Power steering
PID	Parameter identification
PIP	IG coil signal
PRC	Pressure regulator control
PSPS	Power steering pressure
PSP V	Power steering pressure switch signal voltage
PURGCS	CDCV control
PWRGND	Power ground
RDEF	Rear window defroster switch
REC	Recirculate
RF	Right front
RH	Right hand
RPM	Engine speed
RR	Right rear
RTN	Return
SAS	Sophisticated air bag sensor

SHIFT A	Shift solenoid A
SHIFT B	Shift solenoid B
SHIFT C	Shift solenoid C
SHORTFT1	Short fuel trim (FS) Short fuel trim (RH) (KL)
SHORTFT2	Short fuel trim (LH)
SIG	Signal
SIGRTN	Ground
SPRKADV	Spark advance (negative values are retard)
SS1	Shift solenoid 1 (FS) Shift solenoid A (KL)
SS1F	Shift solenoid 1 circuit failed
SS2	Shift solenoid 2 (FS) Shift solenoid B (KL)
SS2F	Shift solenoid 2 circuit failed
SS3	Shift solenoid C
SS3L	3–2 timing/coasting clutch solenoid signal
SST	Special service tool
STM1	EGR control #1 coil
STM2	EGR control #2 coil
STM3	EGR control #3 coil
STM4	EGR control #4 coil
SW	Switch
TCBS	Trans control button depressed signal (ATX only)
TCC	Torque converter clutch solenoid duty value
TCC CON	Torque converter clutch control solenoid valve
TCCF	Torque converter clutch solenoid circuit failed
TCCH	Torque converter clutch soleonid valve signal (FS)
TCCMCMD	Slip value of torque converter
TCIL	O/D OFF indicator light
TCILF	O/D OFF indicator light circuit failed
TCS	Traction control system
TFT	Transaxle fluid temperature
TFT V	Transaxle fluid temperature sensor signal voltage
TNS	Tail number side lights
TOT	Transaxle fluid temperature
TP	Throttle position
TP MODE	Throttle position
TPREL	Closed throttle position signal voltage
TP V	Throttle position sensor signal voltage
TRIP	OBD II trip cycle status
TRIPCNT	Total number of OBD II trip cycle completed
TR V	Transaxle range switch signal voltage
TS1	Transaxle range position (L range)

TS2	Transaxle range position (S range)
TSD	Transaxle range position (D range)
TSR	Transaxle range position (R position)
TSS	Turbine shaft speed
TSS/ISS	Transaxle input shaft speed
TSS+	Input/turbine speed
TSS–	Ground (Input/turbine speed sensor)
VPWR	Battery voltage
VREF	Constant voltage (Vref)

VRIS	Variable resonance induction system
VRIS1	VRIS control No.1
VRIS2	VRIS control No.2
VSS	Vehicle speed
VSS+	Vehicle speed
VSS–	Ground
WAC	A/C relay

PRE-DELIVERY INSPECTION

W6U000W12

Pre-Delivery Inspection Table

Exterior

INSPECT and **ADJUST**, if necessary, the following items to specification:

- ☐ Glass, exterior bright metal and paint for damage
- ☐ Wheel lug nuts and locks (if equipped) 89—117 N·m {9—12 kgf·m, 66—86 ft·lbf}
- ☐ All weatherstrips for damage or detachment
- ☐ Operation of hood release and lock
- ☐ Operation of trunk lid and fuel lid opener
- ☐ Door operation and alignment
- ☐ Headlight aim

INSTALL the following parts:

- ☐ Wheel caps

Under hood—engine off

INSPECT and **ADJUST**, if necessary, the following items to specification:

- ☐ Fuel, engine coolant, and hydraulic lines, fittings, connections, and components for leaks
- ☐ Engine oil level
- ☐ Power steering fluid level
- ☐ Brake (clutch) fluid level
- ☐ Windshield washer reservoir fluid level
- ☐ Engine coolant level
- ☐ Tightness of battery terminals
- ☐ Manual transaxle oil level

Interior

CHECK the operations of the following items:

- ☐ Seat controls (slide and recline) and headrests
- ☐ Folding rear seat
- ☐ Door locks, including childproof door locks (if equipped)
- ☐ Seat belts and warning system
- ☐ Ignition switch and steering lock
- ☐ Air bag system by using warning light
- ☐ Cruise set (if equipped)
- ☐ Shift-lock system (ATX only)
- ☐ Starter interlock
- ☐ All lights including warning, and indicator lights
- ☐ Sound warning system
- ☐ Horn, wipers, and washers
- ☐ Audio system (if equipped)
- ☐ Cigarette lighter and clock
- ☐ Power windows (if equipped)
- ☐ Heater, defroster, and air conditioner at various mode selections (if equipped)

CHECK the following items:

- ☐ Presence of spare fuse
- ☐ Upholstery and interior finish

CHECK and **ADJUST**, if necessary, the following items:

- ☐ Pedal height and free play of clutch pedal

	Pedal height mm {in}	Free play mm {in}
Clutch pedal	196—204 {7.72—8.03} (with carpet)	5.0—14.0 {0.20—0.55}

- ☐ Parking brake 5—7 notches/ 98 N {10 kgf, 22 lbf}

Under hood—engine running at operating temperature

CHECK the following items:

- ☐ Automatic transaxle fluid level
- ☐ Operation of idle-up system for electrical load, air conditioner or power steering (if equipped)
- ☐ Ignition timing
- ☐ Idle speed

On hoist

CHECK the following items:

- ☐ Underside fuel, coolant and hydraulic lines, fittings, connections, and components for leaks
- ☐ Tires for cuts or bruises
- ☐ Steering linkage, suspension, exhaust system, and all underside hardware for looseness or damage

Road test

CHECK the following items:

- ☐ Brake operation
- ☐ Clutch operation
- ☐ Steering control
- ☐ Operation of gauges
- ☐ Squeaks, rattles, and unusual noises
- ☐ Emergency locking retractors and Automatic locking retractors
- ☐ Cruise control system (if equipped)

After road test

CHECK for necessary owner information materials, tools, and spare tire in vehicle

The following items must be done just before delivery to your customer.

- ☐ Load test battery and charge if necessary (Load test result: Volts)

- ☐ Adjust tire pressure to specification (Refer to door label)
- ☐ Clean outside of vehicle
- ☐ Install fuses for accessories
- ☐ Remove seat and cabin carpet protective covers
- ☐ Vacuum inside of vehicle

SCHEDULED MAINTENANCE

W6U000W13

Scheduled Maintenance Table (Except Canada)
Schedule 1 (Normal driving conditions)

- The vehicle is mainly operated where none of the "unique driving conditions" apply.

Maintenance Item	Maintenance Interval (Number of months or miles (kilometers), whichever comes first)								
	Months		6	12	18	24	30	36	42	48
	× 1000	Miles	7.5	15	22.5	30	37.5	45	52.5	60
		Kilometers	12	24	36	48	60	72	84	96
ENGINE										
Engine valve clearance										I
Drive belts (tension)						I				I
Engine timing belt	★		Replace every 60,000 miles (96,000 km)							
Engine timing belt	*1 ○		Inspect for 60,000 miles (96,000 km), 90,000 miles (144,000 km)							
			Replace every 105,000 miles (168,000 km)							
Engine oil			R	R	R	R	R	R	R	R
Oil filter			R	R	R	R	R	R	R	R
Hoses and tubes for emission	*1									I
AIR CLEANER										
Air cleaner element						R				R
IGNITION SYSTEM										
Spark plugs	(FS)					R				R
Spark plugs	(KL)		Replace every 60,000 miles (96,000 km)							
FUEL SYSTEM										
Idle speed	*1					I				I
Fuel filter	*1									R
Fuel lines and hoses	*1					I				I
COOLING SYSTEM										
Cooling system						I				I
Engine coolant			Replace at first 45,000 miles (72,000 km) or 36 months; after that, every 30,000 miles (48,000 km) or 24 months							
CHASSIS & BODY										
Brake lines, hoses and connections						I				I
Disc brakes						I				I
Drum brakes						I				I
Steering operation and linkages						I				I
Front suspension ball joints						I				I
Driveshaft dust boots						I				I
Bolts and nuts on chassis and body						I				I
Exhaust system heat shields						I				I
All locks and hinges			L	L	L	L	L	L	L	L
AIR CONDITIONER SYSTEM (IF EQUIPPED)										
Refrigerant amount				I		I		I		I
Compressor operation				I		I		I		I

Chart symbols
I : Inspect and repair, clean, adjust, or replace if necessary.
R : Replace
L : Lubricate

Remarks
- After 48 months or 60,000 miles (96,000 km), continue to follow the described maintenance at the recommended intervals.

*1 : According to state and federal regulations, failure to perform maintenance on these items will not void your emissions warranties. However, Mazda recommends that all maintenance services be performed at the recommended time or mileage period to ensure long-term reliability.
○ : For vehicle sold in California and Massachusetts
★ : For vehicle sold outside California and Massachusetts

Schedule 2 (Unique driving conditions)
- Repeated short-distance driving.
- Driving in dusty conditions.
- Driving with extended use of brakes.
- Driving in areas where salt or other corrosive materials are used.
- Driving on rough or muddy roads.
- Extended periods of idling or low-speed operation.
- Driving for long periods in cold temperatures or extremely humid climates.

Maintenance Item	Maintenance Interval (Number of months or miles (kilometers), whichever comes first)												
	Months		4	8	12	16	20	24	28	32	36	40	44	48
	× 1000	Miles	5	10	15	20	25	30	35	40	45	50	55	60
		Kilometers	8	16	24	32	40	48	56	64	72	80	88	96
ENGINE														
Engine valve clearance														I
Drive belts (tension)								I						I
Engine timing belt	★		Replace every 60,000 miles (96,000 km)											
Engine timing belt	*1 ○		Inspect for 60,000 miles (96,000 km), 90,000 miles (144,000 km)											
			Replace every 105,000 miles (168,000 km)											
Engine oil			R	R	R	R	R	R	R	R	R	R	R	R
Engine oil (for Puerto Rico)			Replace every 3,000 miles (4,800 km) or every 3 months											
Oil filter			R	R	R	R	R	R	R	R	R	R	R	R
Hoses and tubes for emission	*1													I
AIR CLEANER														
Air cleaner element					I*1			R			I*1			R
IGNITION SYSTEM														
Spark plugs	(FS)							R						R
Spark plugs	(KL)		Replace every 60,000 miles (96,000 km)											
FUEL SYSTEM														
Idle speed	*1							I						I
Fuel filter	*1													R
Fuel lines and hoses	*1							I						I
COOLING SYSTEM														
Cooling system								I						I
Engine coolant			Replace at first 45,000 miles (72,000 km) or 36 months; after that, every 30,000 miles (48,000 km) or 24 months											
CHASSIS & BODY														
Brake lines, hoses and connections								I						I
Disc brakes					I			I			I			I
Drum brakes								I						I
Steering operation and linkages								I						I
Front suspension ball joints								I						I

Maintenance Item	Maintenance Interval (Number of months or miles (kilometers), whichever comes first)												
	Months		4	8	12	16	20	24	28	32	36	40	44	48
	× 1000	Miles	5	10	15	20	25	30	35	40	45	50	55	60
		Kilometers	8	16	24	32	40	48	56	64	72	80	88	96
Driveshaft dust boots								I						I
Bolts and nuts on chassis and body					I			I			I			I
Exhaust system heat shields								I						I
All locks and hinges			L	L	L	L	L	L	L	L	L	L	L	L
AIR CONDITIONER SYSTEM (IF EQUIPPED)														
Refrigerant amount					I			I			I			I
Compressor operation					I			I			I			I

Chart symbols

I : Inspect and repair, clean, or replace if necessary.
R : Replace
L : Lubricate

Remarks

- After 48 months or 60,000 miles (96,000 km), continue to follow the described maintenance at the recommended intervals.

*1 : According to state and federal regulations, failure to perform maintenance on these items will not void your emissions warranties. However, Mazda recommends that all maintenance services be performed at the recommended time or mileage period to ensure long-term reliability.
○ : For vehicle sold in California and Massachusetts
★ : For vehicle sold outside California and Massachusetts

Scheduled Maintenance Table (Canada)

Maintenance Item	Maintenance Interval (Number of months or kilometers (miles), whichever comes first)												
	Months		5	10	15	20	25	30	35	40	45	50	55	60
	×1000	Kilometers	8	16	24	32	40	48	56	64	72	80	88	96
		Miles	5	10	15	20	25	30	35	40	45	50	55	60
ENGINE														
Engine valve clearance														I
Engine oil			R	R	R	R	R	R	R	R	R	R	R	R
Oil filter			R	R	R	R	R	R	R	R	R	R	R	R
Tension of all drive belts			I	I	I	I	I	I	I	I	I	I	I	I
Engine timing belt		*1												R
AIR CLEANER														
Air cleaner element					I			R			I			R
IGNITION SYSTEM														
Spark plugs		(FS)						R						R
Spark plugs		(KL)												R
COOLING SYSTEM														
Engine coolant level and strength			I	I	I	I	I	I	I	I	I	I	I	I
Cooling system for leaks					I			I			I			I
Engine coolant			Replace at first 72,000 km (45,000 miles) or 45 months; after that, every 48,000 km (30,000 miles) or 30 months											
FUEL SYSTEM														
Idle speed					I			I			I			I
Fuel lines and hoses								I*2						I
Fuel filter								R						R
PCV valve		*2												I
Emission hoses and tubes														I

Maintenance Item	Maintenance Interval (Number of months or kilometers (miles), whichever comes first)												
	Months		5	10	15	20	25	30	35	40	45	50	55	60
	×1000	Kilometers	8	16	24	32	40	48	56	64	72	80	88	96
		Miles	5	10	15	20	25	30	35	40	45	50	55	60
CHASSIS & BODY														
Automatic transaxle fluid level			I	I	I	I	I	I	I	I	I	I	I	I
Transaxle oil (MTX and ATX)								R						R
Driveshaft dust boots								I						I
Brake lines and hoses								I						I
Brake and clutch fluid level			I	I	I	I	I	I	I	I	I	I	I	I
Brake fluid		*3						R						R
Disc brakes					I			I			I			I
Rear drum brakes								I						I
Tire inflation pressure and tire wear			I	I	I	I	I	I	I	I	I	I	I	I
Tires					Rt			Rt			Rt			Rt
Power steering fluid level			I	I	I	I	I	I	I	I	I	I	I	I
Steering operation and linkage (Includes four wheel alignment)								I						I
Suspension components front and rear								I						I
All chassis and body nuts and bolts					I			I			I			I
Exhaust system heat shields								I						I
All locks and hinges			L	L	L	L	L	L	L	L	L	L	L	L
Washer fluid level			I	I	I	I	I	I	I	I	I	I	I	I
Function of all lights			I	I	I	I	I	I	I	I	I	I	I	I
AIR CONDITIONER SYSTEM (IF EQUIPPED)														
Refrigerant amount				I		I		I		I		I		I
Compressor operation				I		I		I		I		I		I

Chart symbols

I : Inspect and repair, clean, adjust, or replace if necessary.
R : Replace
L : Lubricate
Rt : Rotate (tires)

Remarks

- After 60 months or 96,000 km (60,000 miles), continue to follow the described maintenance at the recommended intervals.
- Refer below for a description of items marked * in the maintenance chart.

*1 : Replacement of the timing belt is required every 96,000 km (60,000 miles). Failure to replace this belt may result in damage to the engine.
*2 : This maintenance is recommended by Mazda. However, it is not necessary for emission warranty coverage or manufacturer recall liability.
*3 : This maintenance is recommended by Mazda.

ENGINE

01 SECTION

TROUBLESHOOTING [ENGINE CONTROL FS] 01–01A
TROUBLESHOOTING [ENGINE CONTROL KL] 01–01B
TROUBLESHOOTING [CRUISE CONTROL SYSTEM] 01–01C
MECHANICAL [FS] 01–10A
MECHANICAL [KL] 01–10B
LUBRICATION SYSTEM 01–11
COOLING SYSTEM 01–12
INTAKE-AIR SYSTEM [FS] ... 01–13A
INTAKE-AIR SYSTEM [KL] ... 01–13B
FUEL SYSTEM 01–14
EXHAUST SYSTEM 01–15
EMISSION SYSTEM 01–16
CHARGING SYSTEM 01–17
IGNITION SYSTEM 01–18
STARTING SYSTEM 01–19
CRUISE CONTROL SYSTEM . 01–20
CONTROL SYSTEM [FS] 01–40A
CONTROL SYSTEM [KL] 01–40B
TECHNICAL DATA 01–50
SPECIAL TOOLS 01–60

01–01A TROUBLESHOOTING [ENGINE CONTROL FS]

FOREWORD 01–01A–2
ENGINE ON-BOARD DIAGNOSIS [FS] 01–01A–2
On-Board Diagnostic (OBD) Test Description 01–01A–2
System Pass 01–01A–2
Key On Engine Off (KOEO) Self-Test 01–01A–2
Key On Engine Running (KOER) Self-Test 01–01A–2
Read/Clear Continuous Memory DTC Access Self-Test 01–01A–2
Parameter Identification (PID) Access 01–01A–2
Brake On/Off Test 01–01A–2
Transaxle Control Switch Test 01–01A–2
Power Steering Pressure (PSP) Switch Test 01–01A–2
On-Board Diagnostic Test 01–01A–2
Reading DTCs Procedure 01–01A–3
Read/Clear Continuous DTC Self-Test Procedure 01–01A–4
Key ON Engine OFF Self-Test Procedure 01–01A–4
Key ON Engine Running Self-Test Procedure 01–01A–5
After Repair Procedure 01–01A–5
PID/DATA Monitor and Record Procedure 01–01A–5
Playback of Stored PIDs Procedure . 01–01A–6
Output Test Mode Procedure 01–01A–6
Oxygen Sensor Monitoring Test Results Access Procedure 01–01A–6
OBD II Drive Mode 01–01A–7
ENGINE SYMPTOM TROUBLESHOOTING [FS] 01–01A–122
Diagnostic Index 01–01A–122
Quick Diagnostic Chart 01–01A–124
Description of Drivability Problems .. 01–01A–126
Fuel Pressure Release and Servicing Fuel System 01–01A–126
Fuel Line Safety Procedures 01–01A–126
Symptom Troubleshooting 01–01A–127
ENGINE DIAGNOSTIC INSPECTION [FS] 01–01A–169
Spark Plug Condition Check 01–01A–169
ENGINE SYSTEM INSPECTION [FS] . 01–01A–172
Intake Manifold Vacuum Inspection .. 01–01A–172
Fuel Injector Operation Inspection ... 01–01A–172
Idle Air Control Valve Inspection 01–01A–173
Fuel Pressure Hold Inspection 01–01A–173
Fuel Line Pressure Inspection 01–01A–174
Pressure Regulator Control Inspection 01–01A–175
Purge Control Inspection 01–01A–176
Main Relay Operation Inspection 01–01A–176
Ignition Timing Control Inspection ... 01–01A–176
A/C Cut Off Control Inspection 01–01A–176
Spark Test 01–01A–177
Fuel Cut Control Inspection 01–01A–177
Cooling Fan Control System Inspection 01–01A–177

FOREWORD

W6U101W01

Before proceeding with the following troubleshooting.
- Refer to section 00–00 to understand the basic troubleshooting procedure.
- Perform the diagnostic trouble code (DTC) inspection.
- If a DTC is displayed, proceed with the appropriate inspection steps.
- After starting the engine, perform "ENGINE TUNE-UP".

ENGINE ON-BOARD DIAGNOSIS [FS]

W6U101W02

On-Board Diagnostic (OBD) Test Description

OBD Test is divided into three special tests: Key On Engine Off Self-Test, Key On Engine Running Self-Test and Continuous Memory DTCs Self-Test. The OBD Test checks the integrity and function of the powertrain control system and outputs the test results when requested by the NGS Tester. If also provides a quick end check of the powertrain control system, is usually performed at the start of each diagnostic procedure with all accessories off and is performed at end of most troubleshooting tests for verification of repair and make sure no other faults were incurred while servicing a previous fault.

System Pass

A system pass will be displayed when no DTCs are output and no NGS Tester communication error exists. System pass means that hardware monitored by the PCM is functioning within normal operating limits. When using the NGS Tester, all step by step instructions are defined in the NGS instruction manual. When using a generic scan tool, KOEO and KOER self-tests may not be supported. Refer to the manufacturer's manual for details.

Key On Engine Off (KOEO) Self-Test

Key On Engine Off (KOEO) is a functional test of the PCM performed on demand. A fault must be present at the time of testing for the KOEO Self-Test to detect the fault. This test will perform checks on certain sensor and actuator circuits. A Diagnostic Trouble Code (DTC) will be output on the data link at the end of the test when requested by the NGS tester. Only system pass, hard fault code or an incomplete OBD II drive mode will be displayed.

Key On Engine Running (KOER) Self-Test

Key On Engine Running (KOER) is a functional test of the PCM performed on demand with the engine running and vehicle stopped. A check of the inputs and outputs is made during operating conditions and at normal temperature. The brake on/off, transaxle control and power steering pressure switch tests are part of the KOER self-test and **MUST** be performed during this operation (see below). A fault must be present at the time of testing to detect the fault. A Diagnostic Trouble Code (DTC) will be output on the data link at the end of the test when requested by the NGS tester. Only system pass, hard fault code or an incomplete OBD II drive mode will be displayed.

Read/Clear Continuous Memory DTC Access Self-Test

Continuous DTC access is also a functional test of the powertrain control system. The continuous self-test is always active. The test consists of all the OBD II monitors and the comprehensive component monitor, and is designed to detect failures contributing to driveability and emission concerns. As part of an OBD Test, the technician may perform a specific drive mode before running the OBD Test. This is necessary to detect certain faults not tested during other self-test operations. All self-tests are menu driven in the NGS tester.

Parameter Identification (PID) Access

The PID mode allows access to certain data values, analog and digital inputs and outputs, calculated values and system status information.

Brake On/Off Test

This tests ability of the powertrain control system to detect a state of change in the stop light switch. The brake pedal **MUST** briefly be applied and released on all vehicles with brake on/off input. This test is done during the KOER self-test.

Transaxle Control Switch Test

This tests ability of the powertrain control system to detect a state of change in the O/D OFF switch. The switch **MUST** briefly be cycle on all vehicles with a O/D OFF switch. This test is done during the KOER self-test.

Power Steering Pressure (PSP) Switch Test

This tests the ability of the powertrain control system to detect a change in power steering fluid pressure. The steering wheel **MUST** briefly be turned at least 1/4 of a revolution. This test is done during the KOER self-test.

On-Board Diagnostic Test

New generation star (NGS) tester hook-up procedure

Note
- Make sure key is off.

1. Insert the vehicle interface module and program card into the **SST** (NGS tester) control unit.

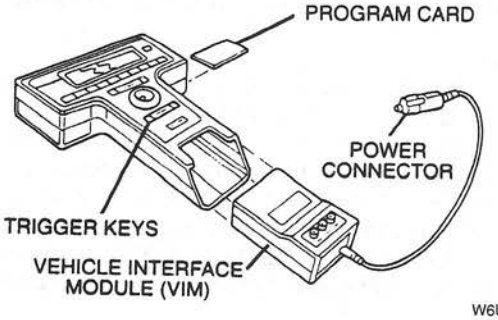

W6U101WC0

2. Plug the NGS OBD II adapter into the interface module and the connector into the vehicle data link connector (DLC) located under the dash left side of the steering shaft.

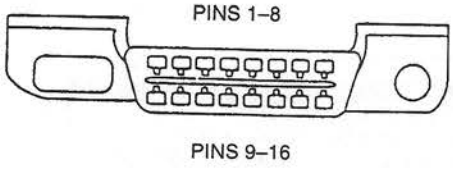

W6U101WA5

3. Plug the **SST** (NGS tester) tester power cable into the NGS OBD II adapter power cable connector, cigarette lighter or use a battery hook-up adapter.

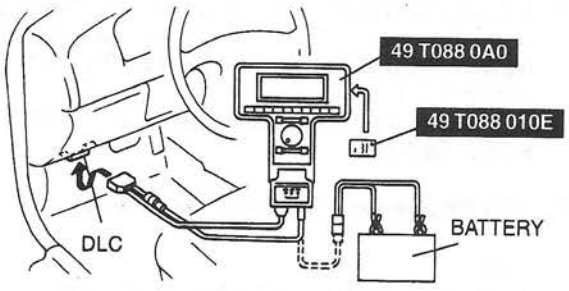

W6U101WA6

4. Listen for a double beep. The **SST** (NGS tester) is now initialized. Begin the functional test of powertrain control system.

Reading DTCs Procedure

Note

- Start engine and bring up to operating temperature before running OBD Test.

1. Perform the necessary vehicle preparation and visual inspection. Hook-up the **SST** (NGS tester) to the vehicle.

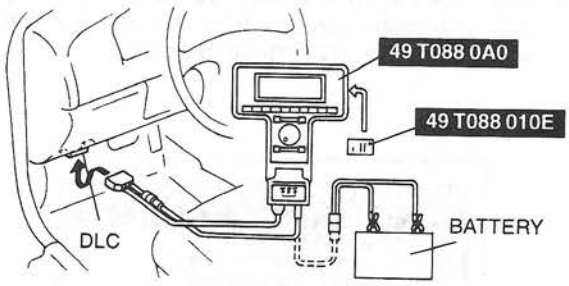

W6U101WC1

2. Move the cursor to **VEHICLE AND ENGINE SELECTION**.

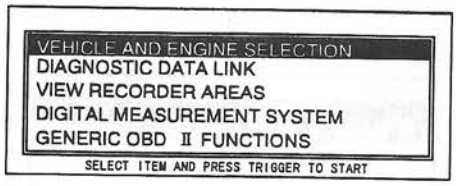

W6U101WC2

3. Move the cursor to **SELECT NEW VEHICLE YEAR & MODEL**. Press the trigger key to enter this selection.

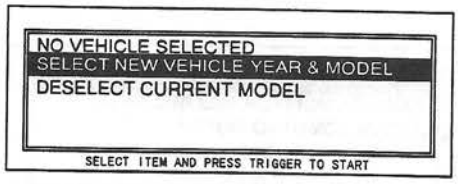

W6U101WC3

4. Move the cursor to **1998 — VIN #10:W**. Press the trigger key to enter this selection.
5. Move the cursor to appropriate model. Press the trigger key to enter this selection.
6. The vehicle selection screen showing the selected vehicle will be displayed. Move the cursor to the vehicle selected. Press the trigger key.

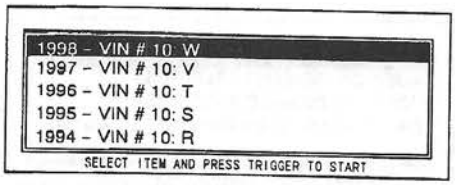

W6U101WC4

7. Move the cursor to **DIAGNOSTIC DATA LINK** in the main menu screen. Press the trigger key to enter into menu system diagnostics.

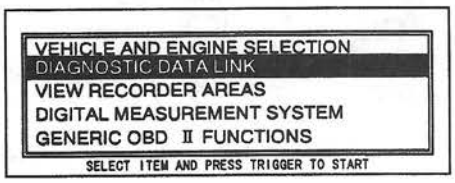

W6U101WC5

8. Move the cursor to **PCM**. Press the trigger.

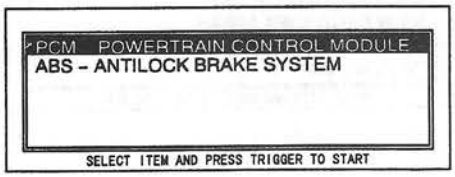

W6U101WC6

9. Move the cursor to **DIAGNOSTIC TEST MODE**. Press the trigger key to enter this selection.

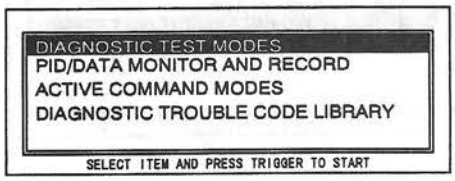

W6U101WC7

10. Move the cursor to appropriate mode. Press the trigger key to enter this selection.
11. Retrieve DTCs as follows:
    (1) Continuous DTCs
    (2) KOEO DTCs
    (3) KOER DTCs

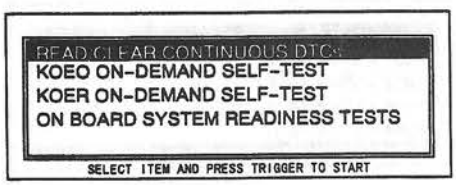

W6U101WC8

Read/Clear Continuous DTC Self-Test Procedure

Note
- The first test to run is Read/Clear Continuous DTC Self-Test. Record the DTCs on a piece of paper and proceed to the KOEO Self-Test.
- The purpose of recording the continuous DTCs at this time to make sure they are not unintentionally cleared during any KOEO or KOER service. KOEO and KOER codes are always addressed before continuous codes.

1. Perform the "New generation star (NGS) tester hook-up procedure".
2. Perform the "Reading DTC Procedure".
3. Move the cursor to **READ/CLEAR CONTINUOUS DTCs**. Press the trigger key to enter this selection.

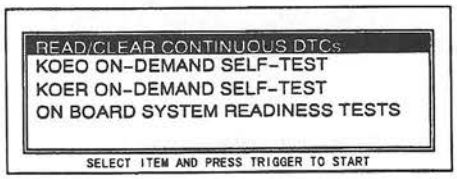

W6U101WC9

4. Turn key on. Press **START**.
5. Follow operating instruction from the menu.
6. If there are DTC(s), refer to Diagnostic Trouble Code Table for further diagnosis information. After repairs, clear DTCs. Press "**C-ALL**" (Key #7) button and press trigger.
7. If there are no codes, press **CANCEL**. Perform KOEO Self-Test.

Key ON Engine OFF Self-Test Procedure

Note
- Make sure the A/C switch is OFF during KOEO Self-Test. If the A/C switch is ON during this test, DTC P1464 will be indicated on the NGS tester.

1. Perform the "New generation star (NGS) tester hook-up procedure".
2. Perform the "Reading DTC Procedure".
3. Move the cursor to **KOEO ON-DEMAND SELF-TEST**. Press the trigger key to enter this selection.

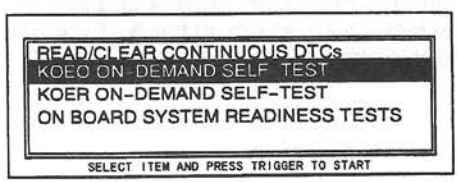

W6U101WCA

4. Follow operating instruction from the menu.
5. Note any KOEO DTCs.
6. Press **CANCEL**. Perform KOER Self-Test.

Key ON Engine Running Self-Test Procedure

Note
- Make sure the A/C switch is OFF during KOER Self-Test. If the A/C switch is ON during this test, DTC P1464 will be indicated on the NGS tester.
- The brake pedal must be depressed and released after KOER Self-Test is initiated. If not performed, DTC P1703 will be indicated on the NGS tester.
- The steering wheel must be turned to the right and left after KOER Self-Test is initiated. If not performed, DTC P1650 will be indicated on the NGS tester.
- Start the engine and bring up to normal operating temperature before running the KOER Self-Test.

1. Perform the "New generation star (NGS) tester hook-up procedure".
2. Perform the "Reading DTC Procedure".
3. Move the cursor to **KOER ON-DEMAND SELF-TEST**. Press the trigger to enter this selection.

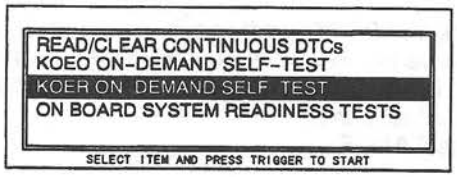

W6U101WCB

4. Start engine and bring up to normal operating temperature. Press **START**.
5. Follow operating instruction from the menu and perform Brake On/Off (BOO), O/D OFF switch and PSP cycling test, if equipped.
6. Note any KOER DTCs.
7. Press **CANCEL** several times to return to the main menu.

After Repair Procedure

1. After repairs have been made, connect **SST** (NGS tester) to the Data Link Connector.
2. Select Clear Codes function in **GENERIC OBD II FUNCTIONS** and clear DTCs.

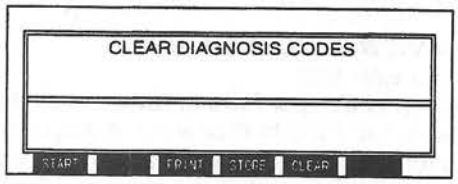

W6U101WCC

3. Perform Self-Test to ensure customer's concern has been resolved.

PID/DATA Monitor and Record Procedure

1. Perform the "New generation star (NGS) tester hook-up procedure."
2. Perform step 1 through step 9 from the "Reading DTC Procedure".
3. Turn key on or engine running.
4. Move the cursor to **PID/DATA MONITOR AND RECORD**. Press the trigger.

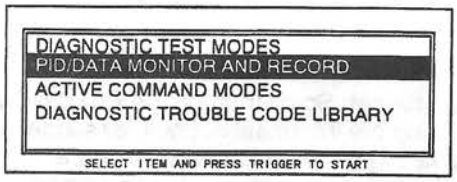

W6U101WCD

5. Move cursor to PID values to view. Press trigger.

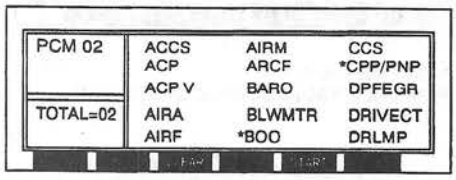

W6U101WCE

6. Select **START** to begin.
7. When ready to capture and store the select PIDs, press trigger button.
8. Press trigger again when ready to save information.
9. The information is now located in the main recording area. Store to a viewing area before starting another recording or the data will be overwritten.

Playback of Stored PIDs Procedure

Note
- Look for abnormal behavior or values that are clearly incorrect. Inspect the signals for abrupt or unexpected changes.
- Look for agreement in related signals.
- Make sure signals act in proper sequence.

1. Select **VIEW RECORDER AREAS**.
2. Select a view area.
3. Select up to the four PIDs to review in the table format or two PIDs to review in the graph mode.
4. Table format: Scroll through the PID data while analyzing the information. Look for sudden drops or spikes in the values.
   For example:
   Notice the major jump in the TP voltage while scrolling through the information. This example would require a smooth and progressive throttle pedal travel during a key ON and engine OFF mode.

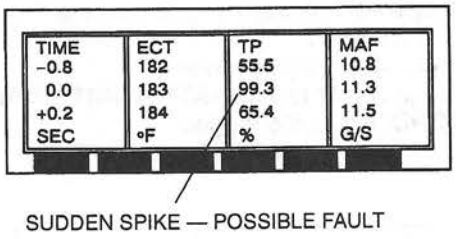

W6U101WCF

5. Graph format: Scroll through the PID data while analyzing the information. Look for sudden drops or spikes in the linear lines showing the transformation of values to the line graph.

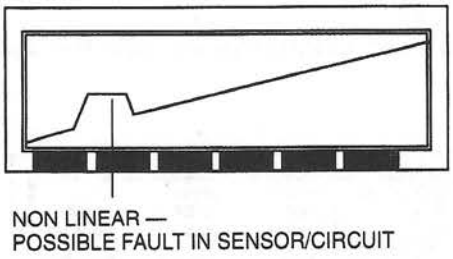

W6U101WCG

Output Test Mode Procedure

1. Perform the "New generation star (NGS) tester hook-up procedure."
2. Perform step 1 through step 9 from the "Reading DTC Procedure".
3. Turn key on.
4. Move the cursor to **ACTIVE COMMAND MODES**. Press the trigger key to enter this selection.

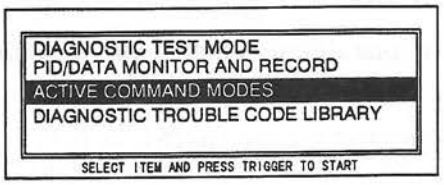

W6U101WCH

5. Move the **OUTPUT TEST MODE**. Press the trigger key to enter this selection.
6. Press **MODE** (Key #3) repeatedly to change the mode from **ALL ON** to **LOW FAN**, **HIGH FAN**, and **ALL OFF**. Return the mode to **ALL ON**.
7. Press **START** (Key #4) to run the fuel pump. Press **STOP** (Key #4) to turn off the fuel pump.
8. To open and close certain actuators in the emission system, press **PIDS** (Key #7).
9. Press **CLEAR** (Key #5) to clear previous selected **PIDS**.

Note
- To select desired PIDs, place the shaded bar over the item(s) and press trigger. A star symbol appears next to the item when it's selected. Press **START** (Key #7). The selected PID(s) and values appear.
- You can only select 30 PIDs at a time.

10. Press **START** (Key #4) to turn on the fuel pump. Observe the values change from **OFF** to **ON** or from **0%** to **100%**. Press **STOP** (Key #4) to turn off the fuel pump.
11. Press **CANCEL**.

Oxygen Sensor Monitoring Test Results Access Procedure

Note
- The Oxygen Sensor Monitoring Test Results allows access to on-board oxygen sensor fault limits and actual values during OBD II drive mode.

1. Perform the "New generation star (NGS) tester hook-up procedure."
2. Select **VEHICLE AND ENGINE SELECTION**.
3. Select **NEW VEHICLE YEAR & MODEL**. Select year, engine, model with appropriate qualifier, if needed. (Refer to Reading DTCs Procedure.)

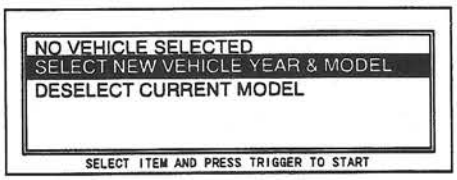

W6U101WCJ

4. Turn key on.
5. Move cursor to **GENERIC OBD II FUNCTIONS**. Press trigger to enter this selection.
6. Select **OXYGEN SENSOR TESTS**. Press trigger.
7. Select **MANUFACTURING SPECIFIC TEST ID**. Press trigger.
8. Scroll up to the test number (**41H**) and press trigger.

OBD II Drive Mode

- To complete the OBD II system check, following drive mode procedure must be performed.

Caution

- **When this procedure is carried out, be sure to drive the vehicle at the lawful speed and pay attention to the other vehicles. When the NGS tester is used to check the vehicle speed while driving, be sure to have another worker on the passenger seat, or record the data in the tester by the using the "PID/DATA MONITOR AND RECORD" function and check later.**

Note

- Vehicle speed and engine speed detected by the PCM may differ from that indicated by the speedometer and the tachometer. Check the vehicle speed and engine speed during driving mode by using the NGS tester.
- If the OBD II system check is not completed while the drive mode procedure carried out, the OBD II system may have detected the malfunction.
- The vehicle shold cold soak for at least 8 hours before performing the evaporative system check.

Procedure

1. Connect NGS tester to data link connector.
2. Start engine.
3. Drive vehicle and accelerate to 65 km/h {40 mph} within 20 seconds.
4. Fix throttle opening and drive vehicle at 56—73 km/h {35—45 mph} for 340 seconds.
5. Accerate to 80—93 km/h {50—58 mph} (FS MTX), 80—96 km/h {50—60 mph} (FS ATX) within 10 seconds.
6. Fix throttle opening and drive vehicle for at least 2 minutes.
7. Return to idle 20 seconds.
8. Stop vehicle and perform OBD II system check by using "ON BOARD SYSTEM READINESS" mode of ganeric OBD II function.
9. If supported test is not complete, repeat steps 2 to step 8.

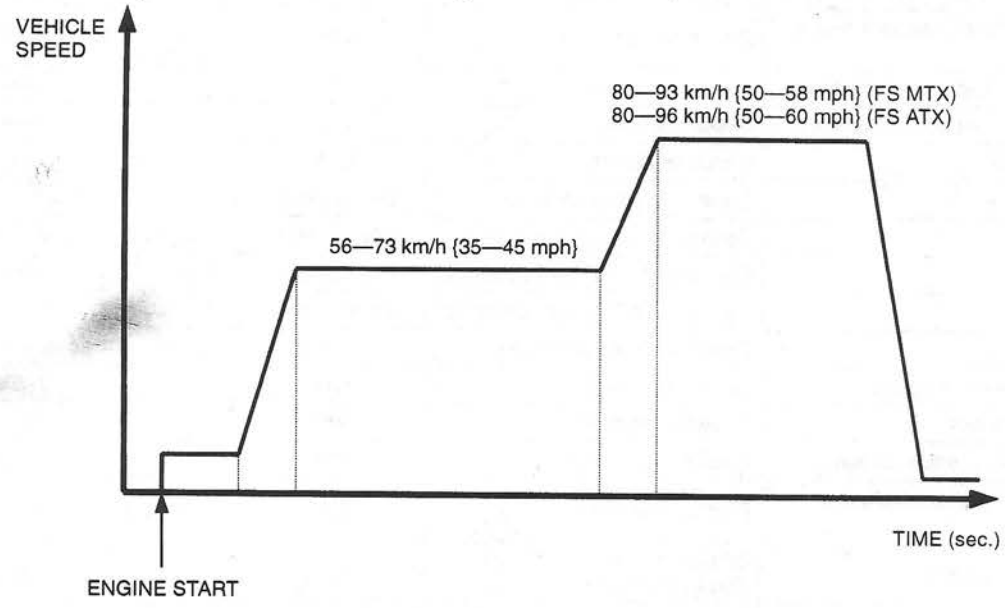

W6U101WD8

Diagnostic trouble code table

DTC No.	Diagnosed Circuit	Condition	MIL	DC*1	OBD Monitor*2
P0102	Mass air flow sensor	Circuit low input	ON	1	CCM
P0103	Mass air flow sensor	Circuit high input	ON	1	CCM
P0106	EGR boost sensor	Input signal out of self-test range	ON	1	CCM
P0107	EGR boost sensor	Input signal out of self-test minimum	ON	1	CCM
P0108	EGR boost sensor	Input signal out of self-test maximum	ON	1	CCM
P0112	Intake air temperature sensor	Circuit low input	ON	1	CCM
P0113	Intake air temperature sensor	Circuit high input	ON	1	CCM
P0117	Engine coolant temperature sensor	Circuit low input	ON	1	CCM
P0118	Engine coolant temperature sensor	Circuit high input	ON	1	CCM
P0122	Throttle position sensor	Circuit low input	ON	1	CCM
P0123	Throttle position sensor	Circuit high input	ON	1	CCM
P0125	Engine coolant temperature sensor	Insufficient coolant temperature to enter a closed loop fuel control	ON	2	CCM
P0133	Heated oxygen sensor (Front)	Circuit low response	ON	2	O_2 sensor
P0135	Heated oxygen sensor (Front)	Circuit malfunction	ON	2	O_2 sensor heater
P0136	Heated oxygen sensor (Rear)	Circuit malfunction	ON	2	O_2 sensor
P0141	Heated oxygen sensor heater (Rear)	Circuit malfunction	ON	2	O_2 sensor heater
P0171	Adaptive fuel control system	System too lean	ON	2	Fuel
P0172	Adaptive fuel control system	System too rich	ON	2	Fuel
P0230	Fuel pump	Circuit malfunction	OFF	—	—
P0300	Ignition	Random misfire detected	ON or Flash	1 or 2	Misfire
P0301	Ignition	Cylinder No.1 misfire detected	ON or Flash	1 or 2	Misfire
P0302	Ignition	Cylinder No.2 misfire detected	ON or Flash	1 or 2	Misfire
P0303	Ignition	Cylinder No.3 misfire detected	ON or Flash	1 or 2	Misfire
P0304	Ignition	Cylinder No.4 misfire detected	ON or Flash	1 or 2	Misfire
P0320	Ignition engine speed	Circuit malfunction	ON	1	CCM
P0325	Knock sensor	Circuit malfunction	OFF	—	—
P0340	Camshaft position sensor	Circuit malfunction	ON	1	CCM
P0400	Exhaust gas recalculation (EGR)	Flow malfunction	ON	2	EGR
P0420	Catalyst system	Efficiency below threshold (Except California)	ON	2	Catalyst
P0421	Catalyst system	Efficiency below threshold (California)	ON	2	Catalyst
P0442	Evaporative emission control system	Leak detected (Small leak)	ON	2	Purge
P0443	Evaporative emission control system	Purge solenoid valve circuit malfunction	ON	2	CCM
P0446	Evaporative emission control system	Vent control malfunction	ON	2	Purge
P0452	Evaporative emission control system	Pressure sensor low input	ON	2	CCM
P0453	Evaporative emission control system	Pressure sensor high input	ON	2	CCM
P0455	Evaporative emission control system	Control leak detected (Gross leak)	ON	2	Purge

DTC No.	Diagnosed Circuit	Condition	MIL	DC*1	OBD Monitor*2
P0460	Fuel gauge sender unit	Circuit malfunction (Open/short, functional)	OFF	—	—
P0500	Vehicle speed sensor	Sensor malfunction	ON	2	CCM
P0505	Idle air control system	System malfunction	OFF	—	—
P0603	PCM	Keep alive memory (KAM) test error	OFF	—	—
P0605	PCM	Read only memory (ROM) test error	OFF	—	—
P0704	Clutch switch	Input circuit malfunction	OFF	—	—
P0707	TR switch	TR out of range Shorted circuit or sensor	☞ 05–01A AUTOMATIC TRANSAXLE ON-BOARD DIAGNOSIS [LA4A-EL]		
P0708	TR switch	TR circuit high or open	☞ 05–01A AUTOMATIC TRANSAXLE ON-BOARD DIAGNOSIS [LA4A-EL]		
P0712	TFT sensor	150 °C {302 °F} indicates TFT circuit grounded (KOEO, KOER)	☞ 05–01A AUTOMATIC TRANSAXLE ON-BOARD DIAGNOSIS [LA4A-EL]		
		150 °C {302 °F} indicates TFT circuit grounded (continuous)			
P0713	TFT sensor	–40 °C {–40 °F} indicates TFT circuit open (KOEO, KOER)	☞ 05–01A AUTOMATIC TRANSAXLE ON-BOARD DIAGNOSIS [LA4A-EL]		
		–40 °C {–40 °F} indicates TFT circuit open (continuous)			
P0715	TSS sensor	Insufficient input from TSS sensor	☞ 05–01A AUTOMATIC TRANSAXLE ON-BOARD DIAGNOSIS [LA4A-EL]		
P0731	SS1, SS2, or internal parts	Incorrect 1GR ratio	☞ 05–01A AUTOMATIC TRANSAXLE ON-BOARD DIAGNOSIS [LA4A-EL]		
P0732	SS1, SS2, or internal parts	Incorrect 2GR ratio	☞ 05–01A AUTOMATIC TRANSAXLE ON-BOARD DIAGNOSIS [LA4A-EL]		
P0733	SS1, SS2, or internal parts	Incorrect 3GR ratio	☞ 05–01A AUTOMATIC TRANSAXLE ON-BOARD DIAGNOSIS [LA4A-EL]		
P0734	SS1, SS2, or internal parts	Incorrect 4GR ratio	☞ 05–01A AUTOMATIC TRANSAXLE ON-BOARD DIAGNOSIS [LA4A-EL]		
P0741	TCC solenoid	TCC control engagement error	☞ 05–01A AUTOMATIC TRANSAXLE ON-BOARD DIAGNOSIS [LA4A-EL]		
P0743	TCC solenoid	TCC solenoid circuit failure during self-test	☞ 05–01A AUTOMATIC TRANSAXLE ON-BOARD DIAGNOSIS [LA4A-EL]		
P0750	SS1	SS1 circuit failure	☞ 05–01A AUTOMATIC TRANSAXLE ON-BOARD DIAGNOSIS [LA4A-EL]		
P0751	SS1	SS1 hydraulic/mechanical malfunction	☞ 05–01A AUTOMATIC TRANSAXLE ON-BOARD DIAGNOSIS [LA4A-EL]		
P0755	SS2	SS2 circuit failure	☞ 05–01A AUTOMATIC TRANSAXLE ON-BOARD DIAGNOSIS [LA4A-EL]		
P0756	SS2	SS2 hydraulic/mechanical malfunction	☞ 05–01A AUTOMATIC TRANSAXLE ON-BOARD DIAGNOSIS [LA4A-EL]		
P1001	KOER aborted	KOER not able to complete	OFF	—	—
P1100	Mass air flow sensor	Sensor intermittent	OFF	—	—
P1101	Mass air flow sensor	Input signal out of self-test range	OFF	—	—
P1112	Intake air temperature sensor	Sensor intermittent	OFF	—	—
P1116	Engine coolant temperature sensor	Input signal out of self-test range	OFF	—	—
P1117	Engine coolant temperature sensor	Sensor intermittent	OFF	—	—
P1120	Throttle position sensor	Out of range low	ON	1	CCM
P1121	Throttle position sensor	Input signal inconsistent with MAF sensor	ON	1	CCM

DTC No.	Diagnosed Circuit	Condition	MIL	DC*1	OBD Monitor*2
P1124	Throttle position sensor	Input signal out of self-test range	OFF	—	—
P1125	Throttle position sensor	Circuit intermittent	OFF	—	—
P1127	Heated oxygen sensor heater	Exhaust system too cool	OFF	—	—
P1130	Heated oxygen sensor (Front)	Lack of HO2S 11 switch adaptive fuel at limit	ON	2	O_2 sensor
P1131	Heated oxygen sensor (Front)	Lack of HO2S 11 switch sensor indicates lean	ON	2	O_2 sensor
P1132	Heated oxygen sensor (Front)	Lack of HO2S 11 switch sensor indicates rich	ON	2	O_2 sensor
P1137	Heated oxygen sensor (Rear)	Lack of HO2S 12 switch sensor indicates lean	OFF	—	—
P1138	Heated oxygen sensor (Rear)	Lack of HO2S 12 switch sensor indicates rich	OFF	—	—
P1250	Fuel pressure regulator control solenoid valve	Circuit malfunction	OFF	—	—
P1409	EGR valve (Stepper motor)	Malfunction	ON	2	CCM
P1410	EGR boost sensor/solenoid	Stuck	OFF	—	—
P1450	Evaporative emission control system	Unable to bleed up fuel tank vacuum	ON	2	Purge
P1451	Evaporative emission control system	Canister Drain Cut Valve (CDCV) circuit malfunction (Open/short)	ON	2	CCM
P1460	Wide open throttle air conditioning cutoff	Circuit malfunction	OFF	—	—
P1464	Air conditioner (A/C)	Out of self-test range	OFF	—	—
P1474	Fan control system	Cooling fan control primary circuit malfunction	OFF	—	—
P1479	Fan control system	Condenser fan control primary circuit malfunction	OFF	—	—
P1487	EGR boost solenoid valve	Circuit malfunction	OFF	—	—
P1501	Vehicle speed sensor	Input signal out of self-test range	OFF	—	—
P1504	Idle air control (IAC) system	Circuit malfunction	ON	2	CCM
P1506	Idle air control (IAC) system	Overspeed error	ON	2	CCM
P1507	Idle air control (IAC) system	Underspeed error	ON	2	CCM
P1602	Immobilizer system	Immobilizer unit – PCM communication error	OFF	—	—
P1603	Immobilizer system	Cordword unregistered in PCM	OFF	—	—
P1604	Immobilizer system	Key ID number unregistered in PCM	OFF	—	—
P1621	Immobilizer system	Code word does not match after engine cranking	OFF	—	—
P1622	Immobilizer system	Key ID number does not match	OFF	—	—
P1623	Immobilizer system	Code word or key ID number read/write error in PCM	OFF	—	—
P1624	Immobilizer system	Immobilizer system communication counter = 0	OFF	—	—
P1650	Power steering pressure sensor	Out of self-test range	OFF	—	—
P1652	Power steering pressure switch	Faild on	ON	2	CCM
P1701	TCC sensor	Sensor intermittent	☞ 05–01A AUTOMATIC TRANSAXLE ON-BOARD DIAGNOSIS [LA4A-EL]		

DTC No.	Diagnosed Circuit	Condition	MIL	DC*1	OBD Monitor*2
P1702	TR circuit	TR intermittent	☞ 05–01A AUTOMATIC TRANSAXLE ON-BOARD DIAGNOSIS [LA4A-EL]		
P1703	Brake switch	Out of self-test range	OFF	—	—
P1705	TR circuit	TR indicates wrong position during KOEO	☞ 05–01A AUTOMATIC TRANSAXLE ON-BOARD DIAGNOSIS [LA4A-EL]		
P1711	TFT sensor	ATF is not at operating temperature during self-test	☞ 05–01A AUTOMATIC TRANSAXLE ON-BOARD DIAGNOSIS [LA4A-EL]		
P1742	TCC solenoid	TCC solenoid failed on (MIL turned on)	☞ 05–01A AUTOMATIC TRANSAXLE ON-BOARD DIAGNOSIS [LA4A-EL]		
P1743	TCC solenoid	TCC solenoid failed on (TCIL turned on)	☞ 05–01A AUTOMATIC TRANSAXLE ON-BOARD DIAGNOSIS [LA4A-EL]		
P1744	TCC solenoid	TCC system malfunction (stuck off)	☞ 05–01A AUTOMATIC TRANSAXLE ON-BOARD DIAGNOSIS [LA4A-EL]		
P1746	EPC solenoid	Open PCM output driver	☞ 05–01A AUTOMATIC TRANSAXLE ON-BOARD DIAGNOSIS [LA4A-EL]		
P1747	EPC solenoid	EPC solenoid circuit failure, shorted to ground or open	☞ 05–01A AUTOMATIC TRANSAXLE ON-BOARD DIAGNOSIS [LA4A-EL]		
P1751	SS1	SS1 circuit failure	☞ 05–01A AUTOMATIC TRANSAXLE ON-BOARD DIAGNOSIS [LA4A-EL]		
P1756	SS2	SS2 electrical malfunction	☞ 05–01A AUTOMATIC TRANSAXLE ON-BOARD DIAGNOSIS [LA4A-EL]		
P1767	TCC solenoid	TCC solenoid circuit failure	☞ 05–01A AUTOMATIC TRANSAXLE ON-BOARD DIAGNOSIS [LA4A-EL]		
P1780	O/D OFF switch	O/D OFF switch not cycled during self-test	☞ 05–01A AUTOMATIC TRANSAXLE ON-BOARD DIAGNOSIS [LA4A-EL]		
P1783	Transaxle fluid temperature sensor	ATF temperature exceeded 132 °C {270 °F}	☞ 05–01A AUTOMATIC TRANSAXLE ON-BOARD DIAGNOSIS [LA4A-EL]		
P1788	3-2T/CCS	Circuit open or PCM drive circuit failure during self-test	☞ 05–01A AUTOMATIC TRANSAXLE ON-BOARD DIAGNOSIS [LA4A-EL]		
P1789	3-2T/CCS	Circuit shorted during self-test	☞ 05–01A AUTOMATIC TRANSAXLE ON-BOARD DIAGNOSIS [LA4A-EL]		

*1 : DC signifies the Number of consecutive drive cycles required to illuminate the MIL.
*2 : Appropriate OBD II Monitor.

DTC P0102	MAF sensor circuit low input
DESCRIPTION	• DTC P0102 indicates MAF signal went below 0.39 volts (refer to Voltage to Mass Air Flow Conversion Table) sometime during normal engine operation (Continuous)

[Possible Cause]
- Damaged MAF sensor
- MAF sensor disconnected
- MAF circuit open
- Power circuit open
- Ground circuit open
- MAF circuit shorted to ground
- Air Intake Leak (near MAF sensor)
- Throttle Position (TP) system (possible closed throttle indication)
- Damaged PCM

STEP	INSPECTION		ACTION
1	CHECK MAF SIGNAL LOW INPUT TO PCM • Check broken/loose air outlet tube clamps (throttle body and air cleaner component ends), cracks/holes in air outlet tube, worn gaskets between MAF sensor and air cleaner assembly. Service as necessary. • Start engine and bring to idle. **Note** • If KOER DTC P0505 is present, go to Diagnostic Trouble Code Charts. If stabilized idle is not under 700 rpm, go to ENGINE SYMPTOM TROUBLESHOOTING. • Run engine up 1500 rpm for 5 seconds then bring it back to idle. • Access MAF V PID with NGS tester. • **Is MAF V PID less than 0.39 volts?**	Yes	The MAF sensor signal is lower than acceptable minimum. Go to next step.
		No	**For KOER reading between 0.60 and 1.00 volt:** Go to step 10. **All others:** Go to step 13.
2	CHECK MAF SENSOR POWER CIRCUIT VOLTAGE • Key off. • Disconnect MAF sensor. • Key on, engine off. • Measure voltage between power circuit at MAF sensor vehicle harness connector and battery negative post. • **Is voltage greater than 10.5 volts?**	Yes	Power harness circuit from MAF sensor to battery negative post is okay. Go to next step.
		No	Service open power circuit. RESET PCM to completely clear DTCs. ☞ After Repair Procedure COMPLETE OBD II Drive Mode. RETURN OBD Test.
3	CHECK CONTINUITY OF MAF SENSOR POWER CIRCUIT • Key off. • MAF sensor disconnected. • Disconnect PCM. Inspect for damaged or pushed out pins, corrosion, loose wires, etc, Service as necessary. • Install breakout box. Leave PCM disconnected. • Measure resistance between power circuit at the MAF sensor vehicle harness connector and Test Pin 71 or 97 at the breakout box. • **Is resistance less than 5.0 ohms?**	Yes	Power harness circuit to PCM is okay. Go to next step.
		No	Service open power harness circuit. REMOVE breakout box. RECONNECT all components. RESET the PCM to completely clear DTCs. ☞ After Repair Procedure COMPLETE OBD II Drive Mode. RERUN OBD Test.
4	CHECK MAF SIGNAL CIRCUIT FOR SHORTS TO GROUND CIRCUIT • Key off. • MAF sensor disconnected. • Breakout box installed, PCM disconnected. • Disconnect NGS tester from DLC. • Measure the resistance between Test Pin 88 or Test Pins 36 and 24 or 103 at the breakout box. • **Is each resistance greater than 10,000 ohms?**	Yes	MAF signal circuit and ground harness circuits to PCM are okay. RECONNECT NGS tester. Go to next step.
		No	Service short circuit between MAF signal and ground. REMOVE breakout box. RECONNECT all components. RESET PCM to completely clear DTCs. ☞ After Repair Procedure COMPLETE OBD II Drive Mode. RERUN OBD Test.

STEP	INSPECTION		ACTION
5	CHECK CONTINUITY OF MAF SIGNAL CIRCUIT • Key off. • MAF sensor disconnected. • Breakout box installed. PCM disconnected. • Measure resistance between MAF circuit at the MAF sensor vehicle harness connector and Test Pin 88 at the breakout box. • **Is resistance less than 5.0 ohms?**	Yes	MAF signal circuit to PCM is okay. Go to next step.
		No	SERVICE open in MAF signal circuit. REMOVE breakout box. RECONNECT all components. RESET PCM to completely clear DTCs. ☞ After Repair Procedure COMPLETE OBD II Drive Mode. RERUN OBD Test.
6	CHECK GROUND CIRCUIT TO MAF SENSOR • Key off. • MAF sensor disconnected. • Breakout box installed. • Key on, engine off. • Measure voltage between power circuit and ground circuit at MAF sensor vehicle harness connector. • **Is voltage greater than 10.5 volts?**	Yes	Ground circuit from battery negative post to MAF sensor is okay. Go to step 8.
		No	Go to next step.
7	CHECK MAF SENSOR GROUND CIRCUIT CONTINUITY • Key off. • MAF sensor disconnected. • Breakout box installed. • Disconnect PCM. • Disconnect NGS tester from DLC. • Measure resistance between ground circuit at MAF sensor vehicle harness connector and battery negative post. • **Is resistance less than 10 ohms?**	Yes	Ground harness circuit to MAF sensor is okay. RECONNECT NGS tester. Go to next step.
		No	SERVICE open in ground harness circuit. REMOVE breakout box. RECONNECT all components. RESET PCM to completely clear DTCs. ☞ After Repair Procedure COMPLETE OBD II Drive Mode. RERUN OBD Test.
8	CHECK PCM GROUND CIRCUIT (BETWEEN PCM AND MAF SENSOR GROUND CIRCUIT) CONTINUITY • Key off. • MAF sensor disconnected. • Breakout box installed. PCM disconnected. • Measure resistance between PCM ground circuit at MAF sensor vehicle harness connector and Test Pin 36 at breakout box. • **Is resistance less than 5.0 ohms?**	Yes	PCM ground harness circuit to PCM is okay. Go to next step.
		No	SERVICE open in PCM ground harness circuit. REMOVE breakout box. RECONNECT all components. RESET PCM to completely clear DTCs. ☞ After Repair Procedure COMPLETE OBD II Drive Mode. RERUN OBD Test.
9	CHECK MAF SIGNAL CIRCUIT FOR SHORT TO GROUND IN PCM • Key off. • MAF sensor disconnected. • Breakout box installed. • Reconnect PCM to breakout box. • Disconnect NGS tester from DLC (if applicable). • Measure resistance between Test Pin 88 and Test Pins 36 and 24 or 103 (PWR GND) at breakout box. • **Is each resistance greater than 10,000 ohms?**	Yes	RECONNECT NGS tester. Go to next step.
		No	MAF signal circuit short to in PCM. REMOVE breakout box. RECONNECT MAF sensor. RESET PCM to completely clear DTCs. ☞ After Repair Procedure COMPLETE OBD II Drive Mode. RERUN OBD Test.
10	CHECK MAF SIGNAL CIRCUIT OUTPUT • Key off. • MAF sensor connected. • Breakout box installed. PCM connected. • Key on, engine running. **Note** • If stabilized idle is not stabilized at minimum of 700 rpm, go to ENGINE SYMPTOM TROUBLESHOOTING. • Measure voltage between Test Pin 88 at breakout box and battery negative post. • **Is voltage at idle between 0.34 and 1.96 volts?**	Yes	MAF signal circuit to PCM is okay. Go to next step.
		No	MAF signal circuit or ground circuit is open in the MAF sensor, or MAF signal circuit is shorted to PCM ground circuit in the MAF sensor. REPLACE MAF sensor. REMOVE breakout box. RECONNECT PCM. RESET PCM to completely clear DTCs. ☞ After Repair Procedure COMPLETE OBD II Drive Mode. RERUN OBD Test.

STEP	INSPECTION		ACTION
11	VERIFY MAF SIGNAL CIRCUIT INPUT AND OUTPUT • Key off. • MAF sensor connected. • Breakout box installed. PCM connected. • Key on, engine running. • Measure voltage between Test Pin 88 and Test Pin 36 at breakout box. • **Is voltage between 0.34 and 1.96 volts?**	Yes	PCM ground circuit in MAF sensor is okay. Go to next step.
		No	PCM ground circuit open in the MAF sensor. REPLACE MAF sensor. REMOVE breakout box. RECONNECT PCM. RESET PCM to completely clear DTCs. ☞ After Repair Procedure COMPLETE OBD II Drive Mode. RERUN OBD Test.
12	CHECK MAF SIGNAL CIRCUIT OUTPUT WITH NGS TESTER • Key off. • MAF sensor connected. • Breakout box installed. PCM connected. • Key on, engine running. • Access MAF V PID with NGS tester at idle. • **Is MAF V PID between 0.34 and 1.96 volts?**	Yes	Unable to identify fault at this time. Check possible intermittent. Go to ENGINE SYMPTOM TROUBLESHOOTING No.27.
		No	MAF signal circuit or PCM ground circuit is open or shorted together in PCM. REPLACE PCM. REMOVE breakout box. RECONNECT PCM. RESET PCM to completely clear DTCs. ☞ After Repair Procedure COMPLETE OBD II Drive Mode. RERUN OBD Test.
13	CHECK MAF SENSOR OUTPUT VOLTAGE **Note** • DTC P1101 could be generated by low charged vehicle battery or the garage exhaust ventilation system. Service battery as necessary. Then remove ventilation system and properly vent to outside atmosphere. Return KOEO self-test. • Key off. • Check that MAF sensor in corrected. If not, service as necessary. • Disconnect PCM. Inspect for damaged or pushed out pins, corrosion, loose wires, etc. Service as necessary. • NGS tester connected. • Install breakout box, connect PCM to breakout box. • Key on, engine off. • Measure between Test Pin 88 and Test Pins 24 or 103 at breakout box. • **Is voltage greater than 0.20 volts?**	Yes	The MAF signal voltage is greater than expected. Go to step 7.
		No	Go to step 3.

DTC P0103	MAF sensor circuit high input
DESCRIPTION	• DTC P0103 indicates Mass Air Flow (MAF) sensor signal went above 4.35 volts during normal engine operation (continuous) or during self-test (KOEO)

[Possible Cause]
- Blocked MAF sensor screen
- Damaged MAF sensor
- MAF signal harness short to power circuit
- Damaged PCM

STEP	INSPECTION		ACTION
1	CHECK MAF SIGNAL HIGH INPUT TO PCM • Start engine and bring to idle. **Note** • If KOER DTC P0505 is present, go to Diagnostic Trouble Code Charts. If stabilized idle is under 700 rpm, go to ENGINE SYMPTOM TROUBLESHOOTING. • Run throttle up to 1500 rpm for 5 seconds, and bring it back to idle. • Access MAF V PID with NGS tester. **Note** • MAF V PID should be greater than 3.9 volts. • Key off. • Disconnect MAF sensor. • Jumper ground and PCM ground (between PCM and MAF sensor ground circuit) pins at MAF sensor vehicle harness connector. • Key on, engine running. • Again access MAF V PID with NGS tester. • **Did MAF V PID drop from previous reading below 0.39 volts?**	Yes	MAF signal circuit shorted to power circuit in MAF sensor. REMOVE Jumper. REPLACE MAF sensor. RESET PCM to completely clear DTCs. ☞ After Repair Procedure COMPLETE OBD II Drive Mode. RERUN OBD Test.
		No	Power short circuit, but not in MAF sensor. REMOVE Jumper. Go to next step.
2	RERUN SELF-TEST WITH MAF SENSOR DISCONNECTED • Key off. • Disconnect MAF sensor. • Disconnect PCM. • Inspect for damage or pushed out pins, corrosion loose wires, etc. Service as necessary. • Install breakout box. Leave PCM disconnected. • Key on, engine off. • Measure voltage between Test Pin 88 and Test pin 24 or 103 GND at breakout box. • **Is voltage greater than 10.5 volts?**	Yes	SERVICE short between MAF signal and power circuit (excluding constant voltage circuit) in harness circuit. REMOVE breakout box. RECONNECT all components. RESET PCM to completely clear DTCs. ☞ After Repair Procedure COMPLETE OBD II Drive Mode. RERUN OBD Test.
		No	Go to next step.
3	CHECK MAF SIGNAL CIRCUIT FOR SHORT TO MAF SENSOR POWER CIRCUIT • Key off. • MAF sensor disconnected. • Disconnect NGS tester from DLC. • Measure resistance between Test Pin 88 and Test Pins 71 or 97 at breakout box. • **Is resistance greater than 10,000 ohms?**	Yes	MAF signal circuit shorted to power circuit in PCM. REPLACE damaged PCM. REMOVE breakout box. RECONNECT MAF sensor. RESET PCM to completely clear DTCs. ☞ After Repair Procedure COMPLETE OBD II Drive Mode. RERUN OBD Test.
		No	SERVICE short between MAF signal circuit and constant voltage circuit in harness circuit. REMOVE breakout box. RECONNECT all components. RESET PCM to completely clear DTCs. ☞ After Repair Procedure COMPLETE OBD II Drive Mode. RERUN OBD Test.

Note
- DTC P0103 could be generated by foreign material blocking the mass air flow sensor screen causing an air flow restriction. If contaminants are found on the screen, check air filter installation in air cleaner tray and proper sealing of air cleaner and air tube before proceeding. Rerun OBD Test after repair.

DTC P0106	EGR boost sensor circuit input signal out of self-test range
DESCRIPTION	• DTC P0106 indicate EGR boost sensor input signal is out of self-test range

[Possible Cause]
- Damaged EGR boost sensor
- Damaged EGR boost solenoid valve
- Damaged EGR boost solenoid valve to EGR boost sensor hose
- Damaged PCM
- Damaged harness connector
- Damaged harness

STEP	INSPECTION		ACTION
1	CHECK EGR BOOST SENSOR CONSTANT VOLTAGE **Note** • If DTC P1410 is present confirm that PRC solenoid valve and EGR boost solenoid valve harness connectors are not swapped. • Key on, engine off. • EGR boost sensor disconnected. • Measure voltage between constant voltage and ground circuits at EGR boost sensor vehicle harness connector. • Key off. • **Is voltage between 4.0 and 6.0 volts?**	Yes	Go to next step.
		No	REPAIR open in constant voltage circuit.
2	CHECK CONTINUITY OF EGR BOOST SENSOR HARNESS CIRCUITS • Key off. • EGR boost sensor disconnected. • Disconnect PCM. Inspect for damaged or pushed out pins, corrosion, loose wires, etc. Service as necessary. • Install breakout box. Leave PCM disconnected. • Measure the resistance between EGR boost signal circuit at EGR boost sensor vehicle harness connector and Test Pin 34 at breakout box. • Measure the resistance between ground circuit at EGR boost sensor vehicle harness connector and Test Pin 91 at breakout box. • **Is each resistance less than 5 ohms?**	Yes	Go to next step.
		No	Service open in appropriate circuit. EGR boost sensor harness circuit. RESET PCM to completely clear DTCs. ☞ After Repair Procedure COMPLETE OBD II Drive Mode. Confirm repair by performing EGR portion of OBD II Drive Mode to check for DTCs.
3	CHECK EGR BOOST SIGNAL CIRCUITS FOR SHORT TO GROUND AND POWER • Key off. • EGR boost sensor disconnected. • Breakout box installed. PCM disconnected. • Measure resistance between Test Pin 34 and Test Pins 91 RTN, 51 and 103 at breakout box. • Measure resistance between Test Pin 34 and Test Pins 71, 90 and 97 at breakout box. • **Is resistance greater than 10,000 ohms?**	Yes	Go to next step.
		No	SERVICE short in EGR boost signal circuit. REMOVE breakout box. RECONNECT all components. RESET PCM to completely clear DTCs. ☞ After Repair Procedure COMPLETE OBD II Drive Mode. Confirm repair by performing EGR portion of OBD II Drive Mode to check for DTCs.

STEP	INSPECTION		ACTION
4	CONFIRM EGR BOOST SOLENOID VACUUM LINES ARE NOT DAMAGED • Check all vacuum lines connected to EGR boost solenoid for damage, blockage etc. • **Do vacuum lines have any blockage or damage?**	Yes	Damaged vacuum lines can cause DTCs to be displayed. SERVICE damaged vacuum lines as necessary. RESET PCM to completely clear DTCs. ☞ After Repair Procedure COMPLETE OBD II Drive Mode. Confirm repair by performing EGR portion of OBD II Drive Mode to check for DTCs.
		No	Vacuum lines are operational and will not cause DTCs. Go to next step.
5	CHECK RESPONSE OF EGR BOOST SENSOR TO MANUALLY APPLIED SIGNAL • Key off. • Disconnect hose from EGR boost solenoid to EGR boost sensor. • Check all vacuum lines connected to the EGR boost solenoids for damage, bleckage, etc. Service as necessary. • Breakout box installed. PCM connected. • Key on. • Using a hand held pump, slowly apply and maintain 71 kPa {533 mmHg, 21 inHg}, while measuring EGR boost sensor voltage response at Test Pin 34 of breakout box. • **Is voltage response between 0.8 and 1.5 volts?**	Yes	REMOVE vacuum pump. RECONNECT all components. Go to next step.
		No	REPLACE EGR boost sensor. REMOVE breakout box. RECONNECT all components. RESET PCM to completely clear DTCs. ☞ After Repair Procedure COMPLETE OBD II Drive Mode. Confirm repair by performing EGR portion of OBD II Drive Mode to check for DTCs.
6	CHECK POWER CIRCUIT AT EGR BOOST SOLENOID • Key off. • EGR boost solenoid disconnected. • Key on, engine idling. • Measure voltage between power circuit and chassis ground at EGR boost solenoid vehicle harness connector. • **Is EGR boost solenoid valve power voltage greater than 10.5 volts?**	Yes	Go to next step.
		No	SERVICE open in EGR boost sensor solenoid valve power circuit. RECONNECT all components. RESET PCM to completely clear DTCs. ☞ After Repair Procedure COMPLETE OBD II Drive Mode. Confirm repair by performing EGR portion of OBD II Drive Mode to check for DTCs.
7	CHECK RESISTANCE OF EGR BOOST SOLENOID • Key off. • EGR boost solenoid disconnected. • Measure solenoid resistance. • **Is resistance between 30 and 70 ohms?**	Yes	Go to next step.
		No	REPLACE EGR boost solenoid. RESET PCM to completely clear DTCs. ☞ After Repair Procedure COMPLETE OBD II Drive Mode. Confirm repair by performing EGR portion of OBD II Drive Mode to check for DTCs.
8	CHECK EGR BOOST SOLENOID CIRCUIT CONTINUITY • Key off. • EGR boost solenoid disconnected. • Disconnect PCM. Inspect for damaged or pushed out pins, corrosion, loose wires, etc. Service as necessary. • Install breakout box. Leave PCM disconnected. • Measure resistance between Test Pin 98 at breakout box and EGR boost solenoid circuit at solenoid vehicle harness connector. • **Is resistance less than 5.0 ohms?**	Yes	Go to next step.
		No	SERVICE open in EGR boost solenoid harness circuit. REMOVE breakout box. RECONNECT all components. RESET PCM to completely clear DTCs. ☞ After Repair Procedure COMPLETE OBD II Drive Mode. Confirm repair by performing EGR portion of OBD II Drive Mode to check for DTCs.

STEP	INSPECTION		ACTION
9	CHECK EGR BOOST SOLENOID CIRCUIT FOR SHORT TO POWER AND GROUND • Key off. • EGR boost solenoid disconnected. • Breakout box installed, PCM disconnected. • Measure resistance between Test Pin 98 and Test Pins 71, 97 and 90 at breakout box. • Measure resistance between Test Pin 98 and Test Pins 51, 103 and 91 at breakout box. • **Is each resistance greater than 10,000 ohms?**	Yes	REMOVE breakout box. RECONNECT all components. Go to next step.
		No	SERVICE short in EGR boost solenoid harness circuit. REMOVE breakout box. RECONNECT all components. RESET PCM to completely clear DTCs. ☞ After Repair Procedure COMPLETE OBD II Drive Mode. Confirm repair by performing EGR portion of OBD II Drive Mode to check for DTCs.
10	CHECK EGR BOOST SOLENOID VALVE OPERATION • Key off. • Breakout box installed. PCM connected. • Disconnect the vacuum line from intake manifold vacuum reservoir to EGR boost solenoid at EGR boost solenoid. • Install vacuum pump at input port of EGR boost solenoid, apply –27— –33 kPa {–203— –254 mmHg, –8— –10 inHg} of vacuum to EGR boost solenoid. • Disconnect vacuum line from barometric pressure to EGR boost sensor at Barometric Pressure Sensor install vacuum gauge at unattached end of vacuum line. • Key on. • Momentarily jumper to ground Test Pin 98 at breakout box to ground and observe the vacuum gauge. • Key off. • **Was vacuum signal of 0— –3.3 kPa {0— –25 mmHg, 0— –1 inHg} indicated by the vacuum gauge before Test Pins 98 and 51 were shorted and –27— –33 kPa {–203— –254 mmHg, –8— –10 inHg} after Pins were shorted?**	Yes	REPLACE damaged PCM. REMOVE breakout box. REMOVE vacuum gauge and vacuum pump. RECONNECT all components. RESET PCM to completely clear DTCs. ☞ After Repair Procedure COMPLETE OBD II Drive Mode. Confirm repair by performing EGR portion of OBD II Drive Mode to check for DTCs.
		No	REPLACE damaged EGR boost solenoid. REMOVE breakout box. REMOVE vacuum gauge and vacuum pump. RECONNECT all components. RESET PCM to completely clear DTCs. ☞ After Repair Procedure COMPLETE OBD II Drive Mode. Confirm repair by performing EGR portion of OBD II Drive Mode to check for DTCs.

DTC P0107	EGR boost sensor circuit input signal out of self-test range minimum
DESCRIPTION	• Continuous memory DTC P0107 indicates that EGR boost signal circuit input is less than self-test minimum

[Possible Cause]
- Damaged EGR boost sensor
- Damaged EGR boost solenoid valve
- Damaged EGR boost solenoid valve to EGR boost sensor hose
- Damaged PCM
- Damaged harness connector
- Damaged harness

STEP	INSPECTION		ACTION
1	CHECK EGR BOOST SENSOR CONSTANT VOLTAGE • Key on, engine off. • EGR boost sensor disconnected. • Measure voltage between constant voltage circuit and ground circuit at EGR boost sensor vehicle harness connector. • **Is voltage between 4.0 and 6.0 volts?**	Yes	Go to next step.
		No	REPAIR open in constant voltage circuit.
2	CHECK CONTINUITY OF EGR BOOST SENSOR SIGNAL CIRCUIT • Key off. • EGR boost sensor disconnected. • Disconnect PCM. Inspect for damaged or pushed out pins, corrosion, loose wires, etc. Service as necessary. • Install breakout box. Leave PCM disconnected. • Measure resistance between EGR boost signal circuit at EGR boost sensor vehicle harness connector and Test Pin 34 at breakout box. • **Is resistance less than 5 ohms?**	Yes	Go to next step.
		No	RESET PCM to completely clear DTCs. ☞ After Repair Procedure COMPLETE OBD II Drive Mode. Confirm repair by performing EGR portion of OBD II Drive Mode to check for DTCs.
3	CHECK EGR BOOST SIGNAL CIRCUIT FOR SHORT TO GROUND • Key off. • EGR boost sensor disconnected. • Breakout box installed. PCM disconnected. • Measure resistance between Test Pin 34 and Test Pins 91, 51 and 103 at breakout box. • **Is resistance greater than 10,000 ohms?**	Yes	Go to next step.
		No	SERVICE short in EGR boost sensor signal circuit. REMOVE breakout box. RECONNECT all components. RESET PCM to completely clear DTCs. ☞ After Repair Procedure COMPLETE OBD II Drive Mode. Confirm repair by performing EGR portion of OBD II Drive Mode to check for DTCs.
4	CHECK RESPONSE OF EGR BOOST SENSOR TO MANUALLY APPLIED SIGNAL • Key off. • Disconnect hose from EGR check solenoid to EGR boost sensor. Inspect for damage, blockage, etc. Service as necessary. • Breakout box installed. PCM connected. • Key on. • Using hand held pump, slowly apply and maintain –71 kPa {–533 mmHg, –21 inHg}, while measuring EGR boost sensor voltage response at Test Pin 34 of breakout box. • **Is voltage response between 0.8 and 1.5 volts?**	Yes	REMOVE vacuum pump. RECONNECT all components. Go to DTC P0106 Troubleshooting step 5.
		No	REPLACE the EGR boost sensor. REMOVE breakout box. RECONNECT all components. RESET PCM to completely clear DTCs. ☞ After Repair Procedure COMPLETE OBD II Drive Mode. Confirm repair by performing EGR portion of OBD II Drive Mode to check for DTCs.

DTC P0108	EGR boost sensor circuit input signal out of self-test range maximum
DESCRIPTION	• Continuous memory DTC P0108 indicates EGR boost sensor signal circuit input is greater than self-test maximum

[Possible Cause]
- Damaged EGR boost sensor
- Damaged EGR boost solenoid valve
- Damaged EGR boost solenoid valve to EGR boost sensor hose
- Damaged PCM
- Damaged harness connector
- Damaged harness

STEP	INSPECTION		ACTION
1	CHECK EGR BOOST SENSOR CONSTANT VOLTAGE • Key on, engine off. • EGR boost sensor disconnected. • Measure voltage between constant voltage circuit and ground circuit at EGR boost sensor vehicle harness connector. • **Is voltage between 4.0 and 6.0 volts?**	Yes	Go to next step.
		No	REPAIR open in constant voltage circuit.
2	CHECK CONTINUITY OF EGR BOOST SENSOR SIGNAL CIRCUIT • Key off. • EGR boost sensor disconnected. • Disconnect PCM. Inspect for damaged or pushed out pins, corrosion, loose wires, etc. Service as necessary. • Install breakout box. Leave PCM disconnected. • Measure resistance between ground circuit at EGR boost sensor vehicle harness connector and Test Pin 91 at breakout box. • **Is resistance less than 5 ohms?**	Yes	Go to next step.
		No	SERVICE open in EGR boost sensor signal circuit. RESET PCM to completely clear DTCs. ☞ After Repair Procedure COMPLETE OBD II Drive Mode. Confirm repair by performing EGR portion of OBD II Drive Mode to check for DTCs.
3	CHECK EGR BOOST SENSOR SIGNAL CIRCUIT FOR SHORT TO POWER • Key off. • EGR boost sensor disconnected. • Breakout box installed. PCM disconnected. • Measure resistance between Test Pin 34 and Test Pins 71, 97 and 90 at breakout box. • **Is resistance greater than 10,000 ohms?**	Yes	Go to next step.
		No	SERVICE short in EGR boost sensor signal circuit. REMOVE breakout box. RECONNECT all components. RESET PCM to completely clear DTCs. ☞ After Repair Procedure COMPLETE OBD II Drive Mode. Confirm repair by performing EGR portion of OBD II Drive Mode to check for DTCs.
4	CHECK RESPONSE OF EGR BOOST SENSOR TO MANUALLY APPLIED SIGNAL • Key off. • Disconnect hose from EGR boost solenoid to EGR boost sensor. Inspect for damage, blockage, etc. Service as necessary. • Breakout box installed. PCM connected. • Key on. • Using a hand held pump, slowly apply and maintain –71 kPa {–533 mmHg, –21 inHg}, while measuring EGR boost sensor voltage response at Test Pin 34 of breakout box. • **Is voltage response between 0.8 and 1.5 volts?**	Yes	REMOVE the vacuum pump. RECONNECT all components. Go to DTC P0106 Troubleshooting step 5.
		No	REPLACE EGR boost sensor. REMOVE breakout box. RECONNECT all components. RESET PCM to completely clear DTCs. ☞ After Repair Procedure COMPLETE OBD II Drive Mode. Confirm repair by performing EGR portion of OBD II Drive Mode to check for DTCs.

KOEO, KOER P0112 DTC P0117	IAT sensor circuit low input ECT sensor circuit low input
DESCRIPTION	• DTC P0117 (ECT) or P0112 (IAT) indicates corresponding sensor's signal is less than self-test minimum. IAT and ECT sensor minimum is 0.2 volt 121 °C {250 °F}

[Possible Cause]
- Grounded circuit in harness
- Damaged PCM
- Damaged sensor
- Improper harness connection

STEP	INSPECTION		ACTION
1	SIMULATE OPPOSITE SIGNAL TO PCM • Key off. • Disconnect vehicle harness from suspect sensor. Inspect for damaged or pushed out pins or loose wires, etc. Service as necessary. • Key on. • **Is ECT or IAT PID more than 4.2 volts (less than –40 °C {–40 °F})?**	Yes	REPLACE sensor. RECONNECT harness. RERUN OBD Test.
		No	Go to next step.
2	CHECK CONSTANT VOLTAGE CIRCUIT VOLTAGE AT THROTTLE POSITION SENSOR • Key off. • Disconnect suspected sensor. • Disconnect TP sensor. • Key on, engine off. • Measure voltage between constant voltage circuit and ground circuit at TP sensor vehicle harness connector. • **Is voltage between 4.5 volts and 5.5 volts?**	Yes	RECONNECT TP sensor. Go to next step.
		No	REPAIR open in constant voltage circuit.
3	CHECK TEMPERATURE SENSOR SIGNAL CIRCUIT FOR SHORT TO GROUND • Key off. • Disconnect suspected temperature sensor. • Disconnect PCM. Inspect for damaged or pushed out pins, corrosion loose wires, etc. Service as necessary. • Install breakout box. Leave PCM disconnected. • Measure resistance between Test Pin 38 or 39 and Test Pins 91 at breakout box. • **Is each resistance greater than 10,000 ohms?**	Yes	REPLACE PCM. REMOVE breakout box. RECONNECT all components. RESET PCM to completely clear DTCs. ☞ After Repair Procedure COMPLETE OBD II Drive Mode. RERUN OBD Test.
		No	SENSOR short circuit. REMOVE breakout box. RECONNECT all components. RESET PCM to completely clear DTCs. ☞ After Repair Procedure COMPLETE OBD II Drive Mode. RERUN OBD Test.

CONTINUOUS DTC	**P0112**	**IAT sensor circuit low input**
	P0113	**IAT sensor circuit high input**
	P1112	**IAT sensor intermittent**
	P0117	**ECT sensor circuit low input**
	P0118	**ECT sensor circuit high input**
	P1117	**ECT sensor intermittent**
DESCRIPTION		• DTCs P0112, P1112 or P0113 (IAT DTCs) and P0117, P1117 and P0118 (ECT DTCs) are not received during KOEO and KOER self-test but are output during Continuous Memory self-test and may be intermittent

[Possible Cause]
- Damaged IAT or ECT sensor
- Damaged harness
- Low coolant (ECT)
- Damaged harness connector
- Damaged PCM

STEP	INSPECTION		ACTION

1	CHECK ECT AND IAT OUTPUT WITH NGS TESTER
	• Key off.
	• NGS tester connected.
	• Key on.
	• Monitor ECT or IAT PID.
	• While observing PID, perform the following:
	  • Tap on sensor to simulate road shock
	  • Wiggle sensor connector
	• **Is there any change in temperature reading?**
		Yes	DISCONNECT and INSPECT connectors.
			If okay, REPLACE sensor.
			RESET PCM to completely clear DTCs.
			☞ After Repair Procedure
			COMPLETE OBD II Drive Mode.
			RERUN OBD Test.
			For Continuous DTCs P1112 and P1117, COMPLETE Comprehensive Component Monitor Drive Mode.

		No	Go to next step.
2	CHECK PCM VEHICLE HARNESS • Still monitoring PID. • While obsering approprate PID, perform the following: • Hold the vehicle harness close to the sensor connector. Wiggle, shake and bend small section of wiring harness while working toward PCM. • **Is there any change in temperature reading?**	Yes	ISOLATE fault. SERVICE as necessary. RESET PCM to completely clear DTCs. ☞ After Repair Procedure COMPLETE OBD II Drive Mode. RERUN OBD Test. For Continuous DTCs P1112 and P1117, COMPLETE Comprehensive Component Monitor Drive Mode.
		No	Go to next step.
3	CHECK PCM AND VEHICLE HARNESS CONNECTORS • Key off. • Disconnect PCM. Disconnect sensor connector. Inspect for damage, loose or pushed outpins, loose or poorly crimped wires. • **Are connectors and terminals okay?**	Yes	Fault is not present. RESET PCM to completely clear DTCs. ☞ After Repair Procedure COMPLETE OBD II Drive Mode. RERUN OBD Test. For Continuous DTCs P1112 and P1117, COMPLETE Comprehensive Component Monitor Drive Mode.
		No	SERVICE as necessary. RESET PCM to completely clear DTCs. ☞ After Repair Procedure COMPLETE OBD II Drive Mode. REURN OBD Test. For Continuous DTCs P1112 and P1117, COMPLETE Comprehensive Component Monitor Drive Mode.

KOEO, KOER P0113 DTC P0118	IAT sensor circuit high input ECT sensor circuit high input
DESCRIPTION	• DTC P0118 (ECT) or P0113 (IAT) indicate corresponding sensor signal is greater than self-test maximum. Maximum for ECT and IAT sensor is 4.6 volt or –50 °C {–46 °F}

[Possible Cause]
- Open in harness (IAT or ECT sensor)
- Damaged sensor
- Improper harness connection
- Damaged PCM

STEP	INSPECTION		ACTION
1	CHECK ECT AND IAT OUTPUT WITH NGS TESTER • Key off. • Disconnect suspected temperature sensor. • Connect jumper wire between sensor signal circuit and ground circuit at temperature sensor vehicle harness connector. • NGS tester installed. • Key on. **Note** • If any NGS tester communication problem exists, remove jumper wire immediately and go to step 3 • Access ECT or IAT PID. • **Is ECT or IAT PID less than 0.2 volts (greater than 120 °C {248 °F})?**	Yes	REPLACE suspect sensor. REMOVE jumper. RECONNECT vehicle harness. RERUN OBD Test.
		No	REMOVE jumper. Go to next step.
2	CHECK CONTINUITY OF SENSOR SIGNAL AND GROUND CIRCUITS • Key off. • Disconnect suspected temperature sensor. • Disconnect PCM. Inspect for damaged or pushed out pins, corrosion, loose wire, etc. Service as necessary. • Install breakout box. Leave PCM disconnected. • Measure resistance between sensor signal circuit at temperature sensor vehicle harness connector and Test Pin 38 or 39 at breakout box. • Measure resistance between ground circuit at temperature sensor vehicle harness connector and Test Pin 91 at breakout box. • **Is each resistance less than 5.0 ohms?**	Yes	REMOVE breakout box. RECONNECT all components. Go to next step.
		No	SERVICE open circuit. REMOVE breakout box. RECONNECT all components. RERUN OBD Test.
3	CHECK FOR SENSOR SIGNAL CIRCUIT SHORTED TO CONSTANT VOLTAGE • Key off. • Disconnect suspected temperature sensor. • Disconnect PCM. Inspect for damaged or pushed out pins, corrosion, loose wires, etc. Service as necessary. • Install breakout box. Leave PCM disconnected. • Measure resistance between sensor signal circuit Test Pin 38 or 39 and constant voltage circuit at breakout box. • **Is each resistance greater than 10,000 ohms?**	Yes	REPLACE PCM. REMOVE breakout box. RECONNECT all components. RERUN OBD Test.
		No	LOCATE and REPAIR short to constant voltage circuit. RERUN OBD Test.

DTC P0122	TP sensor circuit low input
DESCRIPTION	• DTC P0122 indicates Throttle Position (TP) Sensor signal is less than self-test minimum value of 3.43% (0.17 volts)

[Possible Cause]
- TP not seated properly (tightened down)
- Damaged TP sensor
- Open TP signal circuit or constant voltage harness
- TP signal circuit harness short to ground
- Damaged PCM

STEP	INSPECTION		ACTION
1	DTC P0122 ATTEMPT TO GENERATE OPPOSITE DTC P0123 • Key off. • Disconnect TP sensor. Inspect for damaged or pushed out pins, corrosion, loose wires, etc. Service as necessary. • Leave TP sensor disconnected. • Jumper constant voltage circuit to TP signal circuit at TP sensor vehicle harness connector. • Key on, engine off. **Note** • If any NGS tester communication problem exists, remove jumper and go directly to step 4 • Access TP V PID with NGS tester. • Is TP V PID greater than 4.79 V? • **Is DTC P0123 present (ignore all other DTC's)?**	Yes	TP signal circuit shorted to TP sensor ground circuit in TP sensor, or TP signal circuit or constant voltage circuit open in TP sensor. REPLACE TP sensor. REMOVE jumper. RERUN OBD Test.
		No	Constant voltage circuit or TP signal circuit open in harness or PCM or TP signal circuit shorted to ground circuit in harness or PCM. REMOVE jumper. Go to next step.
2	CHECK CONSTANT VOLTAGE • Key off. • TP sensor disconnected. • Key on, engine off. • Measure voltage between constant voltage circuit and ground circuit at TP sensor vehicle harness connector. • **Is voltage between 4.0 and 6.0 volts?**	Yes	Go to next step.
		No	KEY off. RECONNECT all components. REPAIR open in constant voltage circuit.
3	CHECK TP SIGNAL CIRCUIT CONTINUITY • Key off. • TP sensor disconnected. • Disconnect PCM. Inspect for damaged or pushed out pins, corrosion, loose wires, etc. Service as necessary. • Install breakout box. Leave PCM disconnected. • Measure resistance between TP circuit at the TP sensor vehicle harness connector and Test Pin 89 at breakout box. • **Is resistance less than 5.0 ohms?**	Yes	TP signal harness circuit to PCM is okay. Go to next step.
		No	SERVICE open in TP signal harness circuit. REMOVE breakout box. RECONNECT all components. RESET PCM to completely clear DTCs. ☞ After Repair Procedure COMPLETE OBD II Drive Mode. RERUN OBD Test.
4	CHECK TP SIGNAL CIRCUIT FOR SHORTS TO PCM GROUND (BETWEEN PCM AND TP SENSOR GROUND CIRCUIT) OR GROUND • Key off. • TP sensor disconnected. • PCM disconnected. • Measure resistance between Test Pin 89 and Test Pins 91 and 24 or 103 at breakout box. • **Is each resistance greater than 10,000 ohms?**	Yes	TP signal circuit open or shorted to PCM ground (ground circuit) in PCM. REPLACE PCM. REMOVE breakout box. RECONNECT all components. RESET PCM to completely clear DTCs. ☞ After Repair Procedure COMPLETE OBD II Drive Mode. RERUN OBD Test.
		No	SERVICE TP signal circuit shorted to PCM ground (ground circuit) in harness. REMOVE breakout box. RECONNECT all components. RESET PCM to completely clear DTCs. ☞ After Repair Procedure COMPLETE OBD II Drive Mode. RERUN OBD Test.

Note
- An intermittant fault can cause a continuous memory DTC P0122. If DTC P0122 is still present after completing steps 1 through 4, go to DTC P1125.

DTC P0123	TP sensor circuit high input
DESCRIPTION	• DTC P0123 indicates Throttle Position (TP) Sensor signal is greater than the self-test maximum value of 92.27% (4.79 volts)

[Possible Cause]
- TP seated properly (tightened down)
- Damaged TP sensor
- TP SIG harness short to constant voltage circuit or TP sensor power circuit
- Constant voltage circuit harness short to TP sensor power circuit
- Open ground harness circuit
- Damaged PCM

STEP	INSPECTION		ACTION
1	ATTEMPT TO GENERATE DTC P0122 • Key off. • Disconnect TP sensor. Inspect for damaged or pushed out pins, corrosion, loose wires, etc. Service as necessary. • Leave TP sensor disconnected. • Key on, engine off. • Access TPV PID with NGS tester. • **Is TPV PID less than 0.17 volts?**	Yes	TP signal circuit is either shorted to constant voltage in TP sensor or ground circuit is open in TP sensor or harness. Go to next step.
		No	TP signal circuit is shorted to constant voltage or TP sensor power circuit. Go to step 3.
2	CHECK CONSTANT VOLTAGE • Key off. • TP sensor disconnected. • Key on, engine off. • Measure voltage between constant voltage circuit and ground circuit at TP sensor vehicle harness connector. • **Is voltage between 4.0 and 6.0 volts?**	Yes	TP signal circuit shorted to constant voltage on ground circuit open in TP sensor. REPLACE TP sensor. RERUN OBD Test.
		No	KEY off. RECONNECT all components. REPAIR open in constant voltage circuit.
3	CHECK TP SENSOR CIRCUIT FOR SHORTS TO POWER • Key off. • TP sensor disconnected. • Disconnect PCM. Inspect for damaged or pushed out pins, corrosion, loose wires, etc. Service as necessary. • Install breakout box. Leave PCM disconnected. • Measure resistance between Test Pin 89 and Test Pins 90 and 71 or 97 at breakout box. • **Is each resistance greater than 10,000 ohms?**	Yes	TP signal circuit is shorted to constant voltage circuit or TP sensor power circuit in PCM. REPLACE PCM. REMOVE breakout box. RECONNECT TP sensor. RESET PCM to completely clear DTCs. ☞ After Repair Procedure COMPLETE OBD II Drive Mode. RERUN OBD Test.
		No	SERVICE short circuit. REMOVE breakout box. RECONNECT all components. RESET PCM to completely clear DTCs. ☞ After Repair Procedure COMPLETE OBD II Drive Mode. RERUN OBD Test.

Note
- An intermittent fault can cause Continuous Memory DTC P0123. If Continuous Memory DTC P0123 is still present after completing step 1 through 3, go to DTCs P1120 or P1125.

DTC P0125	Insufficient engine coolant temperature for enter a closed loop fuel control
DESCRIPTION	• DTC P0125 indicates ECT sensor has not achieved required temperature to enter closed loop operating conditions within specified amount of time after starting engine. This code will light the MIL

[Possible Cause]
- Insufficient warm up time
- Leaky or stuck open thermostat
- Low coolant

STEP	INSPECTION		ACTION
1	DTC P0125 INDICATES EXCESSIVE TIME TO ENTER CLOSED LOOP FUEL CONTROL • Check coolant level. • **Is coolant level correct?**	Yes	Check thermostat. ☞ 01–12 THERMOSTAT INSPECTION
		No	FILL to proper level. RESET PCM to completely clear DTCs. ☞ After Repair Procedure COMPLETE OBD II Drive Mode. COMPLETE Comprehensive Component Monitor Drive Mode. RERUN OBD Test.

DTC P0133	Heated oxygen sensor (Front) (HO2S 11) circuit low response
DESCRIPTION	• DTC P0133 indicates response rate of heated oxygen sensor is below some calibrated window

[Possible Cause]
- Contaminated heated oxygen sensor
- Exhaust leaks
- Shorted/Open wires
- Improper fueling
- MAF sensor
- Air leaks
- Deteriorating heated oxygen sensor

STEP	INSPECTION		ACTION
1	PERFORM KOER SELF TEST • Key on, engine running and engine at operating temperature. • Activate KOER self-test. • **Is DTCs P1127 present during KOER self-test?**	Yes	Go to DTC chart and service DTCs P1127 as necessary.
		No	Go to next step.
2	HEATED OXYGEN SENSOR RESPONSE TEST • Key off. • NGS tester connected. • Key on, engine off. • Select Generic OBD II function from menu and trigger. • Press Continue. • Select Diagnostic Monitoring Test Results from menu and trigger. • Scroll to Test ID: 01 trigger and press start. • **Does the measured value indicate greater than 614?**	Yes	RESET PCM to completely clear DTCs. ☞ After Repair Procedure COMPLETE OBD II Drive Mode. REPEAT step 1. If test results indicate pass, testing is complete.
		No	Oxygen sensor test results indicate a fail. Go to next step.

3	CHECK FOR SOURCE OF POTENTIAL HEATED OXYGEN SENSOR CONTAMINATION
	• Investigate following items as potential source of heated oxygen sensor contamination.
	  • Use of unapproved silicone sealers
	  • Fuel contaminated by silicone additives
	  • Excessive oil burning (i.e. rings, valve seals and oil overfill)
	  • Glycol (antifreeze) leaking internally in engine
	  • Contaminated fuel
	  • Use of unapproved cleaning agents
	• **Are any of above conditions present?**
		Yes	SERVICE source of contamination.
			REPLACE heated oxygen sensor and oil/filter.
			RESET PCM to completely clear DTCs.
			☞ After Repair Procedure
			COMPLETE OBD II Drive Mode.
			RERUN OBD Test.

		No	Go to next step.

STEP	INSPECTION		ACTION

4	CHECK FOR UNMETERED AIR LEAKS
	Fuel calculations can be affected by unmetered air leaks.
	• Carefully inspect the following areas for potential air leaks.
	  • Hoses connecting to MAF sensor
	  • Hoses connecting to throttle body
	  • Intake manifold gasket leaks
	  • Positive crankcase ventilation (PCV) disconnected
	  • Vacuum lines disconnected
	  • Improperly seated engine oil dipstick and tube
	  • Exhaust leaks at flanges and gaskets
	• **Are there any air leaks?**
		Yes	Air leaks located.
			SERVICE source of air leak.
			RESET PCM to completely clear DTCs.
			☞ After Repair Procedure
			COMPLETE OBD II Drive Mode.
			RERUN OBD Test.

		No	Go to next step.
5	CHECK OF HEATED OXYGEN SENSOR CIRCUIT WIRING WITH PCM CONNECTED • Key off. • PCM connected. • Disconnect suspected heated oxygen sensor. • Jumper heated oxygen sensor signal circuit to power circuit at heated oxygen sensor harness connector. • NGS tester connected. • Key on, engine off. • Access correct heated oxygen sensor PID. • O2S11 **Note** • Heated oxygen sensor displayed as O2S11 (Front), O2S12 (REAR) on NGS tester. • **Is voltage greater than 1.50 volts?**	Yes	Heated oxygen sensor signal circuit is not faulty. REPLACE heated oxygen sensor. CHANGE oil/filter. RESET PCM to completely clear DTCs. ☞ After Repair Procedure COMPLETE OBD II Drive Mode. RERUN OBD Test.
		No	Go to next step.

6	CHECK RESISTANCE OF HEATED OXYGEN SENSOR SIGNAL CIRCUIT
	• Key off.
	• Disconnect NGS tester.
	• Disconnect PCM. Inspect both end of connect for bent or pushed out pins, corrosion or other damage. Service as necessary.
	• Install breakout box. Leave PCM disconnected.
	• Measure resistance between heated oxygen sensor signal Test Pin at breakout box and heated oxygen sensor harness connector.
	  • HO2S Front=Test Pin 60
	• Measure resistance between following Test Pin at breakout box and heated oxygen sensor harness connector.
	  • Ground=Test Pin 91
	• **Is resistance less than 5.0 ohms?**
		Yes	Go to next step.

		No	Resistance is high. SERVICE open circuit. REMOVE breakout box. RECONNECT all components. RESET PCM to completely clear DTCs. ☞ After Repair Procedure COMPLETE OBD II Drive Mode. RERUN OBD Test.

7	CHECK FOR SHORT IN HEATED OXYGEN SENSOR CIRCUIT
	• Key off.
	• Breakout box installed. PCM disconnected.
	• Measure resistance between heated oxygen sensor signal Test Pin at breakout box and power circuit and heated oxygen sensor signal Test Pin and ground circuit at breakout box.
	  • HO2S (Front)=Test Pin 60
	  • Power circuit=Test Pin 71/97
	  • Ground=Test Pin 91
	• **Is resistance greater than 10,000 ohms?**
		Yes	REPLACE PCM.
			COMPLETE OBD II Drive Mode.
			RERUN OBD Test.

		No	SERVICE short circuit. REMOVE breakout box. RECONNECT all components. RESET PCM to completely clear DTCs. ☞ After Repair Procedure COMPLETE OBD II Drive Mode. RERUN OBD Test.

DTC	P0135 P0141	**Heated oxygen sensor heater (Front) (HTR 11) circuit malfunction** **Heated oxygen sensor heater (Rear) (HTR 12) circuit malfunction**
DESCRIPTION		• DTC P0135 and P0141 indicate short to ground, or open, or short to power circuit in heated oxygen sensor heater circuit

[Possible Cause]
- Shorts to B+ in harness or heated oxygen sensor
- Water in connectors
- Cut or pulled wires
- Disconnected wiring
- Open heated oxygen sensor heater power circuit
- Open ground circuit
- Low battery positive voltage
- Corrosion or poor mating terminals
- Damaged heated oxygen sensor heater
- Damaged PCM

STEP	INSPECTION		ACTION
1	HEATED OXYGEN SENSOR HEATER SIGNAL CIRCUIT IS OPEN, SHORTED TO GROUND, SHORTED TO B+ OR EXCESSIVE CURRENT DRAW Heated oxygen sensor reference list DTC P0135=Heated oxygen sensor heater (Front) DTC P0141=Heated oxygen sensor heater (Rear) • Visually inspect heated oxygen sensor circuit for exposed wiring, contamination, corrosion and proper assembly. **Note** • On some applications, vehicle hoist may be required to access heated oxygen sensor harness. • **Were any concerns found during visual inspection?**	Yes	SERVICE any concerns found in the visual inspection. RESET PCM to completely clear DTCs. ☞ After Repair Procedure COMPLETE a OBD II Drive Mode. RERUN OBD Test.
		No	Go to next step.
2	PERFORM KOEO SELF TEST • Key off. • NGS tester connected. • Key on, engine on. • Engine at 2,000 rpm for 1 minute. • Key off. • Key on, engine off. • Perform KOEO self-test. • **Are DTCs P0135 and/or P0141 present?**	Yes	Go to next step.
		No	Fault may be intermittent. Intermittent poor connection or component malfunction (SERVICE or REPLACE as necessary). Go to ENGINE SYMPTOM TROUBLESHOOTING No.27
3	CHECK FOR POWER AT VEHICLE HEATED OXYGEN SENSOR HARNESS CONNECTOR • Key off. • Disconnect appropriate heated oxygen sensor(s). • Inspect both ends of connector(s) for damaged or pushed out pins, moisture, corrosion, contamination, etc. Repair as necessary. • Key on, engine off. • Measure voltage between power and ground circuit at heated oxygen sensor vehicle harness connector. • **Is voltage greater than 10.5 volts?**	Yes	Go to step 5.
		No	Go to next step.

STEP	INSPECTION		ACTION
4	CHECK FOR OPEN HEATED OXYGEN SENSOR POWER CIRCUIT • Key off. • Disconnect PCM. Inspect both ends of connector for bent or pushed out pins, corrosion or other damage. Repair as necessary. • Install breakout box. Leave PCM disconnected. • Disconnect suspected sensor. • Measure the resistance between Test Pin 71 or 97 at breakout box and power circuit at heated oxygen sensor vehicle harness connector. • **Is resistance less than 4.0 ohms?**	Yes	Go to next step.
		No	CHECK fuse. SERVICE open circuit if necessary. REMOVE breakout box. RECONNECT all components. RESET PCM to completely clear DTCs. ☞ After Repair Procedure COMPLETE OBD II Drive Mode. RERUN OBD Test.
5	CHECK HEATED OXYGEN SENSOR HEATER RESISTANCE • Key off. • Heated oxygen sensor disconnected. • Connect circuit tester to heated oxygen sensor heater ground and power terminals at heated oxygen sensor connector, and measure resistance of heated oxygen sensor heater. • **Is resistance between 3 and 30 ohms?**	Yes	Go to next step.
		No	REPLACE heated oxygen sensor. REMOVE breakout box. RECONNECT all components. RESET PCM to completely clear DTCs. ☞ After Repair Procedure COMPLETE OBD II Drive Mode. RERUN OBD Test.
6	CHECK FOR HEATER GND AND POWER CIRCUIT SHORTED TO HEATED OXYGEN SENSOR CASE • Disconnect suspected sensor. • Measure the resistance between heated oxygen sensor heater ground at heated oxygen sensor connector and heated oxygen sensor case. • Measure resistance between heated oxygen sensor heater ground or ground terminal at heated oxygen sensor. • Measure resistance between heated oxygen sensor power circuit at heated oxygen sensor connector and heated oxygen sensor case. • **Is resistance greater than 10,000 ohms?**	Yes	Go to next step.
		No	REPLACE heated oxygen sensor. REMOVE breakout box. RECONNECT all components. RESET PCM to completely clear DTCs. ☞ After Repair Procedure COMPLETE OBD II Drive Mode. RERUN OBD Test.

7	CHECK FOR SHORTS TO OTHER GROUNDS AND POWER IN HEATED OXYGEN SENOSR HEATER GROUND HARNESS CIRCUITS
	• Key off.
	• Disconnect NGS tester from DLC.
	• Disconnect suspected sensor.
	• Disconnect PCM.
	• Install breakout box. Leave PCM disconnected.
	• Use following list to measure resistance between appropriate test pins at breakout box.
	  • DTC P0135=HO2S heater (Front) (Heater ground) Test Pin 93 and Test Pins 24, 103, 91 and 97.
	  • DTC P0141=HO2S heater (Rear) (Heater ground) Test Pin 95 and Test Pins 24, 103, 91 and 97.
	• **Is resistance greater than 10,000 ohms?**
		Yes	Go to next step.

		No	SERVICE shorted circuit. REMOVE breakout box. RECONNECT all components. RESET PCM to completely clear DTCs. ☞ After Repair Procedure COMPLETE OBD II Drive Mode. RERUN OBD Test.

STEP	INSPECTION		ACTION

8	CHECK FOR OPEN HEATED OXYGEN SENSOR HEATER GROUND HARNESS CIRCUIT
	• Key off.
	• Disconnect suspected sensor.
	• Install breakout box. PCM disconnected.
	• Use the following list to measure resistance between appropriate Test Pins at breakout box and heated oxygen sensor heater ground at vehicle harness connector.
	  • HO2S heater (Front)=Test Pin 93 (Heater ground)
	  • HO2S heater (Rear)=Test Pin 95 (Heater ground)
	• **Is resistance less than 4.0 ohms?**
		Yes	Open or shorted or excessive resistance in heater circuit in PCM.
			REPLACE PCM.
			REMOVE breakout box.
			RECONNECT all components.
			COMPLETE OBD II Drive Mode.
			RERUN OBD Test.

		No	SERVICE open or excessive resistance in heater circuit in harness. REMOVE breakout box. RECONNECT all components. RESET PCM to completely clear DTCs. ☞ After Repair Procedure COMPLETE OBD II Drive Mode. RERUN OBD Test.

DTC	P0136 P1137 P1138	**Heated oxygen sensor (Rear) (HO2S 12) circuit malfunction** **Lack of heated oxygen sensor (Rear) (HO2S 12) switch sensor indicates lean** **Lack of heated oxygen sensor (Rear) (HO2S 12) switch sensor indicates rich**
DESCRIPTION		• DTC P0136 indicate output voltage of rear heated oxygen sensor is less than calibratabled functional window. • DTC P1137 and P1138 can only be retrieved during KOER self-test when fuel control is ramped rich and lean and monitored for voltage change on rear heated oxygen sensor.

[Possible Cause]
- Wiring Concerns
  - Pinched, shorted, and corroded wiring and pins
  - Crossed sensor wires
- Other Concerns
  - Exhaust leaks
  - Contaminated or damaged sensor

STEP	INSPECTION		ACTION
1	DTCS P0136 MONITOR REAR HEATED OXYGEN SENSOR OUTPUT VOLTAGE FOR ACTIVITY. • **Are any of the above concerns present?**	Yes	SERVICE as necessary. RESET PCM to completely clear DTCs. ☞ After Repair Procedure COMPLETE OBD II Drive Mode. RERUN OBD Test.
		No	**Continuous Memory DTCs P0136:** Go to next step. **All others:** Go to step 3.
2	CHECK FOR KOER DTCS P1137 AND P1138 • Key off. • NGS tester connected. • Key on. • Engine at 2,000 rpm for 3 minutes. • Perform KOER self-test. • Check for DTCs. • **Are DTCs P1137 or P1138 present?**	Yes	Go to next step.
		No	Fault may be intermittent. Intermittent poor connection or component malfunction (SERVICE or REPLACE as necessary). Go to ENGINE SYMPTOM TROUBLESHOOTING No. 27.

3	CHECK EXHAUST SYSTEM FOR LEAKS
	Note
	• Any exhaust leaks between the engine and the end of three way catalytic converter may cause DTC P0136.
	• Key off.
	• Raise vehicle.
	• Inspect the following:
	  • Exhaust flanges for leaks
	  • Heated oxygen sensor tightening torque
	  • Check for punctures and cracks in three way catalytic converter and pipes leading to them
	• **Are there any exhaust leaks?**
		Yes	REPLACE or SERVICE as required.
			RESET PCM to completely clear DTCs.
			☞ After Repair Procedure
			COMPLETE OBD II Drive Mode.
			RERUN OBD Test.

		No	Go to next step.

STEP	INSPECTION		ACTION

4	CHECK HEATED OXYGEN SENSOR HARNESS CIRCUIT FOR SHORT TO POWER AND GROUND AND PCM GROUND (BETWEEN PCM AND HO2S GROUND CIRCUIT)
	• Key off.
	• Disconnect NGS tester from DLC.
	• Disconnect PCM. Inspect both ends of connector for damaged or pushed out pins, moisture, corrosion and loose pins. Service as necessary.
	• Breakout box installed. Leave PCM disconnected.
	• Disconnect suspected heated oxygen sensor.
	• Measure resistance between heated oxygen sensor signal Test Pin and PCM ground Test Pin at breakout box.
	• Measure resistance between heated oxygen sensor signal Test Pin and power and constant voltage Test Pin at breakout box.
	• Measure resistance between heated oxygen sensor signal Test Pin and ground Test Pin at breakout box.
	  • Heated oxygen sensor (Rear)=Test Pin 35
	  • PCM ground=Test Pin 91
	  • Ground=Test Pins 24 and 103
	  • Power=Test Pin 71 and 97
	  • Constant voltage=Test Pin 90
	• **Is resistance greater than 10,000 ohms?**
		Yes	Go to next step.

		No	SERVICE short circuit in harness. REMOVE breakout box. RECONNECT all components. RESET PCM to completely clear DTCs. ☞ After Repair Procedure COMPLETE OBD II Drive Mode. RERUN OBD Test.

5	CHECK RESISTANCE OF HEATED OXYGEN SENSOR AND HEATED OXYGEN SENSOR GROUND CIRCUIT
	• Key off.
	• Breakout box installed. PCM disconnected.
	• Disconnect suspected heated oxygen sensor.
	• Measure resistance between heated oxygen sensor signal Test Pin at breakout box and heated oxygen sensor vehicle harness connector. Record readings.
	• Measure resistance between PCM ground Test Pin at breakout box and heated oxygen sensor PCM ground vehicle harness connector. Record readings.
	  • Heated oxygen sensor (Rear)=Test Pin 35
	  • PCM ground=Test Pin 91
	• **Is resistance reading less than 5.0 ohms?**
		Yes	Go to next step.

		No	SERVICE open circuit in harness. REMOVE breakout box. RECONNECT all components. RESET PCM to completely clear DTCs. ☞ After Repair Procedure COMPLETE OBD II Drive Mode. RERUN OBD Test.

6	CHECK HEATED OXYGEN SENSOR CIRCUIT RESISTANCE
	• Key off.
	• PCM connected to vehicle harness.
	• Connect suspected heated oxygen sensor connector.
	• NGS tester connected.
	• Key on, engine off.
	• Access correct heated oxygen sensor PID.
	  • O2S12 PID
	
	Note
	• Heated oxygen sensor displayed as O2S12 (Rear) on NGS tester.
	
	  • Heated oxygen sensor (Rear)=Test Pin 35
	• **Is voltage greater than 1.5 volts?**
		Yes	Go to step 9.

		No	Go to next step.

STEP	INSPECTION		ACTION
7	CHECK RESISTANCE OF HEATED OXYGEN SENSOR GROUND CIRCUIT IN PCM • Key off. • PCM connected to breakout box. vehicle harness disconnected from breakout box. • Measure resistance between Test Pin 35 and Test Pin 91 at breakout box. • **Is resistance reading less than 5.0 ohms?**	Yes	REMOVE breakout box. RECONNECT PCM. Go to next step.
		No	REPLACE PCM. REMOVE breakout box. RECONNECT all components. COMPLETE OBD II Drive Mode. RERUN OBD Test.
8	APPLY 12 VOLTS TO SUSPECT HEATED OXYGEN SENSOR CIRCUIT • Key off. • Heated oxygen sensor (Rear) disconnected. • Jumper power to heated oxygen sensor signal circuit at vehicle harness connector. • Key on. • Access heated oxygen sensor PID and monitor. • O2S12 PID • **Is PID voltage greater than 1.5 volts?**	Yes	REPLACE heated oxygen sensor. RECONNECT all components. RESET PCM to completely clear DTCs. ☞ After Repair Procedure COMPLETE OBD II Drive Mode. RERUN OBD Test.
		No	REPLACE PCM. RECONNECT all components. RESET PCM to completely clear DTCs. ☞ After Repair Procedure COMPLETE OBD II Drive Mode. RERUN OBD Test.
9	CHECK FOR OVER VOLTAGE ON HEATED OXYGEN SENSOR CIRCUIT IN PCM • Key on. • PCM connected to vehicle harness. • Heated oxygen sensor disconnected. • Inspect both ends of connect for damaged or pushed out pins, moisture, corrosion, loose pins, etc. and service as necessary. • Measure voltage between PCM ground Test Pin at heated oxygen sensor vehicle harness connector and battery negative post. • Measure voltage between heated oxygen sensor signal Test Pin at heated oxygen sensor vehicle harness connector and battery negative post. • **Are voltage readings greater than 1.5 volts?**	Yes	REPLACE PCM. RECONNECT all components. COMPLETE OBD II Drive Mode. RERUN OBD Test.
		No	REPLACE heated oxygen sensor. RECONNECT all components. RESET PCM to completely clear DTCs. ☞ After Repair Procedure COMPLETE OBD II Drive Mode. RERUN OBD Test.

DTC	**P0171**	**Adaptive fuel control system too lean**
	P0172	**Adaptive fuel control system to rich**
	P1130	**Lack of heated oxygen sensor (Front) (HO2S 11) switch adaptive fuel at limit**
	P1131	**Lack of heated oxygen sensor (Front) (HO2S 11) switch sensor indicates too lean**
	P1132	**Lack of heated oxygen sensor (Front) (HO2S 11) switch sensor indicates too rich**
DESCRIPTION		• DTC P0171 indicates fuel/air ratio is too lean. Fuel trim system is at rich correction limit. • DTC P0172 indicates fuel/air ratio is too rich. Fuel trim system is at lean correction limit. • DTC P1130 indicates fuel control system has reached maximum compensation for lean or rich condition and heated oxygen sensor is not switching. • DTC P1131 indicates fuel/air ratio is correcting rich for an overly lean condition. Heated oxygen sensor voltage is less than 0.45 volt. • DTC P1132 indicates fuel/air ratio is correcting lean for an overly rich condition. Heated oxygen sensor voltage is greater than 0.45 volt.

[Possible Cause]

Fuel System
- Excessive fuel pressure
- Leaking fuel injector(s)
- Leaking pressure regulator
- Low fuel pressure or running out of fuel
- Contaminated fuel injector(s)

Base Engine
- Oil overfill
- Cam timing
- Cylinder compression
- Exhaust leaks before or near heated oxygen sensor

Induction System
- Air leaks after the MAF sensor
- Vacuum leaks
- Restricted air inlet
- Positive crankcase ventilation (PCV) system
- Fuel purge system
- Improperly seated engine oil dipstick

EGR System
- Leaking gasket
- Stuck open EGR valve
- Leaking diaphragm

Warning

Following troubleshooting flow chart contains fuel system diagnosis and repair procedures. Read following warnings before performing fuel system service:
- **Fuel vapor is hazardous. It can easily ignite, causing serious injury and damage. Always keep sparks and flames away from fuel.**
- **Fuel line spills and leaks are dangerous. Fuel can ignite and cause serious injuries or death and damage. Fuel can also irritate skin and eyes. To prevent this, always complete "BEFORE REPAIR PROCEDURE" and "AFTER REPAIR PROCEDURE" described in this manual.**
  ☞ 01–14 BEFORE REPAIR PROCEDURE
  ☞ 01–14 AFTER REPAIR PROCEDURE

STEP	INSPECTION		ACTION
1	VISUAL CHECKS • Check intake air system for leaks, obstructions and damage. • Check air cleaner element and air cleaner housing for blockage. • Verify integrity of PCV system. • Check for vacuum leaks. • **Are any of the above concerns present?**	Yes	SERVICE as necessary. RESET PCM to completely clear DTCs. ☞ After Repair Procedure COMPLETE OBD II Drive Mode. RERUN OBD Test.
		No	Go to next step.
2	PERFORM KOER SELF-TEST • Key off. • NGS tester connected. • Disconnect fuel vapor hose from intake manifold and plug fitting at intake manifold. • Start engine and run at 2,000 rpm for 5 minutes and return to idle. • Perform KOER self-test. • **Are any heated oxygen sensor DTCs P1127, P1131 or P1132 present?**	Yes	**If DTC(s) P1127 is present:** Go to DTC(s) charts PROCEED as required. **DTCs P1131 or P1130:** Go to next step. **DTCs P1132 or P1130:** Go to step 9.
		No	**For Continuous DTCs P1130, P0171, and P0172 Only:** Go to step 12. **If DTC(s) P1132 is no longer present:** RECONNECT fuel vapor line. Check purge solenoid valve DTC (P0443). **All others:** Fault that produced DTC is intermittent. Check for poor connection or component malfunction (SERVICE or REPLACE as necessary). Go to ENGINE SYMPTOM TROUBLESHOOTING No. 27

STEP	INSPECTION		ACTION
3	HEATED OXYGEN SENSOR CIRCUIT TEST (WITH LEAN DTCS) • Key off. • NGS tester connected. • Disconnect suspected heated oxygen sensor. Inspect for damaged or pushed out pins, water, corrosion, loose wires. Service as necessary. • Key on, engine off. • Access correct heated oxygen sensor PID. • O2S11 PID **Note** • If spark occurs, remove jumper and go to step 7 (check fuse in the heater circuit) • Jumper heated oxygen sensor signal circuit to heated oxygen sensor heater power circuit at heated oxygen sensor vehicle harness connector. • **Is reading 1.30 volts or greater?**	Yes	CHECK heated oxygen sensor ground circuit. Go to next step.
		No	An open or short to ground exists in vehicle harness or PCM. Go to step 6.
4	CHECK SIGNAL RETURN CIRCUIT FOR SHORTS AND OPENS • Key off. • Install breakout box. PCM connected. • Measure resistance between heated oxygen sensor ground terminal at heated oxygen sensor vehicle harness connector and ground Test Pin 91 at breakout box. • **Is resistance reading less than 5.0 ohms?**	Yes	REMOVE breakout box. Go to step 12.
		No	Go to next step.
5	CHECK HEATED OXYGEN SENOSR SIGNAL RETURN CIRCUIT IN VEHICLE HARNESS • Breakout box installed. PCM disconnected. • Measure resistance between heated oxygen sensor ground terminal at heated oxygen sensor vehicle harness connector and ground Test Pin 91 at breakout box. • **Is resistance reading less than 5.0 ohms?**	Yes	REMOVE breakout box. REPLACE PCM. COMPLETE OBD II Drive Mode. RERUN OBD Test.
		No	SERVICE open circuit. REMOVE breakout box. RESET PCM to completely clear DTCs. ☞ After Repair Procedure COMPLETE OBD II Drive Mode. RERUN OBD Test.

6	CHECK RESISTANCE OF HEATED OXYGEN SENSOR AND HEATED OXYGEN SENSOR GROUND CIRCUIT
	• Key off.
	• Disconnect PCM. Inspect both ends of connector for bent or pushed out pins, corrosion or other damage. Service as necessary.
	• Install breakout box. Leave PCM disconnected.
	• Disconnected suspected heated oxygen sensor from harness. Inspect both ends of connector for damaged or pushed out pins, moisture, corrosion, loose pins. Service as required.
	• Measure resistance between suspected heated oxygen sensor signal Test Pin at breakout box and heated oxygen sensor vehicle harness connector. Use pin assignment below and record reading:
	  • Heated oxygen sensor (Front)=Test Pin 60
	  • Heated oxygen sensor ground=Test Pin 91
	• **Is resistance reading less than 5.0 ohms?**
		Yes	Go to next step.

		No	SERVICE open circuit. REMOVE breakout box. RECONNECT PCM and heated oxygen sensor. RESET PCM to completely clear DTCs. ☞ After Repair Procedure COMPLETE OBD II Drive Mode. RERUN OBD Test.

STEP	INSPECTION		ACTION
7	CHECK HEATED OXYGEN SENSOR CIRCUIT WIRING HARNESS FOR SHORT TO GROUND • Key off. • Breakout box installed. PCM disconnected. • Heated oxygen sensor disconnected. • Measure resistance between heated oxygen sensor signal Test Pin 60 and Test Pins 23, 24, 51, 76, 77, 103 and 91 at breakout box. • **Is each resistance greater than 10,000 ohms?**	Yes	Go to next step.
		No	SERVICE short circuit. REMOVE breakout box. RECONNECT PCM and heated oxygen sensor. RESET PCM to completely clear DTCs. ☞ After Repair Procedure COMPLETE OBD II Drive Mode. RERUN OBD Test.

8	CHECK HEATED OXYGEN SENSOR FOR SHORT TO GROUND OR PCM GROUND (BETWEEN PCM AND HO2S GROUND CIRCUIT)
	• Key off.
	• Breakout box installed. PCM disconnected.
	• Reconnect heated oxygen sensor.
	• Measure resistance between ground and PCM ground Test Pins and heated oxygen sensor signal Test Pin at breakout box:
	  • Heated oxygen sensor (Front)=Test Pin 60
	  • Ground=Test Pin 24 and 103
	  • PCM ground=Test Pin 91
	• **Is resistance greater than 10,000 ohms?**
		Yes	REMOVE breakout box.
			RECONNECT heated oxygen sensor.
			REPLACE PCM.
			COMPLETE OBD II Drive Mode.
			RERUN OBD Test.

		No	REPLACE heated oxygen sensor. REMOVE breakout box. RECONNECT PCM. RESET PCM to completely clear DTCs. ☞ After Repair Procedure COMPLETE OBD II Drive Mode. RERUN OBD Test.
9	HEATED OXYGEN SENSOR CIRCUIT CHECK (FOR RICH DTCS) • Key off. • Disconnect suspected heated oxygen sensor. Inspect for damaged or pushed out pins, corrosion and loose wires. Service as necessary. • NGS tester connected. • Access O2S11 PID. • **Is reading 0.2 volt or less?**	Yes	Go to step 11.
		No	A short to power exists. Go to next step.

10	CHECK FOR SHORTS TO VOLTAGE SOURCE IN HARNESS CIRCUIT
	• Key off.
	• Disconnect NGS tester from DTC.
	• Disconnect suspected sensor.
	• Disconnect PCM. Inspect for damaged or pushed out pins, corrosion and loose wires. Service as necessary.
	• Install breakout box. Leave PCM disconnected.
	• Use following list to measure resistance between appropriate test pins at breakout box:
	  • DTC P1130, P1132=Heated oxygen sensor (Front)
	  Test Pin 60 and Test Pins 71, 93 and 97.
	• **Is resistance greater than 10,000 ohms?**
		Yes	REMOVE breakout box.
			REPLACE PCM.
			COMPLETE OBD II Drive Mode.
			RERUN OBD Test.

		No	REPLACE heated oxygen sensor. SERVICE short to power. REMOVE breakout box. RECONNECT all components. RESET PCM to completely clear DTCs. ☞ After Repair Procedure COMPLETE OBD II Drive Mode. RERUN OBD Test.
11	CHECK FOR HEATED OXYGEN SENSOR SIGNAL SHORTED TO HEATED OXYGEN SENSOR HEATER CIRCUIT IN SENSOR • Key off. • Connect suspected heated oxygen sensor. • NGS tester connected. • Key on, engine off. **Note** • Heated oxygen sensor displayed as O2S11 on NGS tester. • Access O2S11 PID. • **Is heated oxygen sensor voltage greater than 0.45 volt?**	Yes	REPLACE heated oxygen sensor. RECONNECT all components. RESET PCM to completely clear DTCs. ☞ After Repair Procedure COMPLETE OBD II Drive Mode. RERUN OBD Test.
		No	RECONNECT all components. Go to next step.

STEP	INSPECTION		ACTION
12	CHECK FUEL PRESSURE • Key off. • Install fuel pressure gauge. • Verify vacuum source to fuel pressure regulator. **If engine will start:** • Start engine and idle. Record fuel pressure. • Increase engine speed to 2,500 rpm and maintain for one minute. Record fuel pressure. **No start:** • Cycle key on and off several times. Record fuel pressure. • **Is fuel pressure between 210—280 kPa {2.1—2.9 kgf/cm^2, 30—45 psi}?**	Yes	Fuel system is capable of required fuel pressure. Go to step 22.
		No	Fuel pressure out of specification. Go to next step.
13	CHECK PRESSURE REGULATOR CONTROL (PRC) SOLENOID VALVE POWER CIRCUIT Symptom Charts have indicated lack of power during acceleration and/or cruise drive modes. Possible causes: • Damaged PRC solenoid valve. • Damaged input port or output port vacuum lines. • Damaged PRC solenoid valve harness circuits. • Damaged PCM. • Key off. • PRC solenoid valve disconnected. • Key on, engine off. • Measure voltage between power circuit at PRC solenoid valve vehicle harness connector and battery ground. • **Is voltage greater than 10.5 volts?**	Yes	PRC solenoid valve power circuit is complete. Go to next step.
		No	PRC solenoid valve power circuit is not complete. SERVICE open in power harness circuit. RECONNECT PRC solenoid valve. RESET PCM to completely clear DTCs. ☞ After Repair Procedure COMPLETE OBD II Drive Mode. RERUN OBD Test.
14	CHECK PRC SOLENOID VALVE HARNESS CIRCUIT RESISTANCE • Key off. • PRC solenoid valve disconnected. • Disconnect PCM. Inspect for damaged or pushed out pins, corrosion and loose wires. Service as necessary. • Install breakout box. Leave PCM disconnected. • Measure resistance between Test Pin 19 at breakout box and PRC solenoid valve circuit at solenoid vehicle harness connector. • **Is resistance less than 5.0 ohms?**	Yes	PRC solenoid valve circuit is complete. Go to next step.
		No	PRC solenoid valve circuit lacks continuity. SERVICE open circuit. REMOVE breakout box. RECONNECT all components. RESET PCM to completely clear DTCs. ☞ After Repair Procedure COMPLETE OBD II Drive Mode. RERUN OBD Test.
15	CHECK PRC SOLENOID VALVE CIRCUIT FOR SHORTS TO POWER AND GROUND • Key off. • PRC solenoid valve disconnected. • Breakout box installed, PCM disconnected. • Disconnect NGS tester from DLC. • Measure resistance between Test Pin 19 and Test Pin 71 and 97 at breakout box. • Measure resistance between Test Pin 19 and Test Pins 24, 77 and 91 at breakout box. • **Is resistance greater than 10,000 ohms?**	Yes	There are no power or ground short circuits to PRC solenoid valve. Go to next step.
		No	A power or ground short circuit exists in the PRC solenoid valve harness circuit. SERVICE short circuit. REMOVE breakout box. RECONNECT all components. RESET PCM to completely clear DTCs. ☞ After Repair Procedure COMPLETE OBD II Drive Mode. RERUN OBD Test.

STEP	INSPECTION		ACTION
16	CHECK VACUUM LINE: MANIFOLD VACUUM SOURCE TO PRC SOLENOID VALVE INPUT PORT • Key off. • Disconnect and inspect vacuum line between manifold vacuum source and PRC solenoid valve input vacuum port for blockage, kinks or cracks. • **Is vacuum line free of damage?**	Yes	Vacuum line is okay. RECONNECT vacuum line to manifold vacuum source, leave other end of line. Go to next step.
		No	Vacuum line is damaged. SERVICE or REPLACE damaged vacuum line. RESET PCM to completely clear DTCs. ☞ After Repair Procedure COMPLETE OBD II Drive Mode. RERUN OBD Test.
17	CHECK VACUUM SIGNAL: MANIFOLD VACUUM SOURCE TO PRC SOLENOID VALVE INPUT • Key off. • Connect vacuum gauge at unattached end of vacuum line. • Start engine while observing vacuum gauge display. • Key off. • **Was a vacuum signal present?**	Yes	PRC solenoid valve normally receives manifold vacuum signal. REMOVE vacuum gauge. RECONNECT all components. Go to next step.
		No	REMOVE vacuum gauge. RECONNECT all components. Go to step 38.
18	CHECK VACUUM LINE: FUEL PRESSURE REGULATOR TO PRC SOLENOID VALVE OUTPUT PORT • Key off. • Disconnect and inspect vacuum line between fuel pressure regulator and PRC solenoid valve output vacuum port for blockage, kinks or cracks. • **Is vacuum line free of damage?**	Yes	Vacuum line is okay. RECONNECT vacuum line. Go to next step.
		No	Vacuum line is damaged. SERVICE or REPLACE damaged vacuum line. RESET PCM to completely clear DTCs. ☞ After Repair Procedure COMPLETE OBD II Drive Mode. RERUN OBD Test.
19	CHECK FOR PRC SOLENOID VALVE – VALVE STUCK CLOSED • Key off. • Breakout box installed. PCM connected. • Disconnect vacuum line from PRC solenoid valve to fuel pressure regulator at fuel pressure regulator. Install vacuum gauge at unattached end of vacuum line. • Disconnect vacuum line from intake manifold vacuum to PRC solenoid valve at manifold vacuum source. **Note** • PRC solenoid valve contains normally open valve. If solenoid is not energized while vacuum is applied at input port, vacuum signal will normally be allowed to pass. • Install vacuum pump at input port of PRC solenoid valve and apply –27— –33 kPa {–202— –247 mmHg, –8— –10 inHg} of vacuum to PRC solenoid valve while observing vacuum gauge. • **Is vacuum signal indicated by vacuum gauge?**	Yes	PRC solenoid valve is not stuck closed. Go to next step.
		No	The PRC solenoid valve is stuck closed. REPLACE damaged PRC solenoid valve. REMOVE vacuum gauge and pump. RECONNECT all components. RESET PCM to completely clear DTCs. ☞ After Repair Procedure COMPLETE OBD II Drive Mode. RERUN OBD Test.

STEP	INSPECTION		ACTION
20	CHECK FOR PRC SOLENOID VALVE STUCK OPEN • Key off. • Breakout box installed. PCM connected. • Install vacuum gauge at output port of PRC solenoid valve. • Vacuum pump installed at input port of PRC solenoid valve. • Apply –27— –33 kPa {–203— –247 mmHg, –8— –10 inHg} of vacuum to PRC solenoid valve input port. • Key on. • Momentarily jumper Test Pin 19 to Test Pin 103 at breakout box and observe vacuum gauge. **Note** • PRC solenoid valve contains normally open valve. If solenoid is energized while vacuum is applied at input port, vacuum signal will normally not be allowed to pass because solenoid valve will be closed. • Key off. • **Did vacuum gauge reading drop from –27— –33 kPa {–203— –247 mmHg, –8— –10 inHg} to 0— –3.3 kPa {0— –25 mmHg, 0— –1 inHg} when Test Pin 19 was jumpered to Pin 103?**	Yes	PRC solenoid valve is not stuck open. REMOVE vacuum gauge and pump. RECONNECT all component. Go to next step.
		No	PRC solenoid valve is stuck open. REPLACE damaged PRC solenoid valve. REMOVE vacuum gauge and pump. RECONNECT all components. RESET PCM to completely clear DTCs. ☞ After Repair Procedure COMPLETE OBD II Drive Mode. RERUN OBD Test.

21	CHECK PCM CONTROL OF PRC SOLENOID VALVE
	• Key off.
	• Breakout box installed. PCM connected.
	• Install digital multimeter between Test Pin 19 and Test Pin 71 of breakout box.
	• Record digital multimeter readings under following conditions:
	  • Key on, engine off.
	  • Engine crank.
	  • Engine running (More than 10 seconds after start-up).
	
	Note
	• PRC solenoid valve should only be energized during engine crank for previous conditions.
	
	• **Is voltage reading between Pin 19 and Pin 71 10—12 V during engine crank and 0—2 V during other conditions?**
		Yes	PCM is properly controlling the PRC solenoid valve.
			REMOVE breakout box.
			CHECK and REPLACE pressure regulator.

		No	PCM is not properly controlling PRC solenoid valve. REMOVE breakout box. REPLACE PCM. COMPLETE OBD II Drive Mode. RERUN OBD Test.
22	CHECK SYSTEM ABILITY TO HOLD FUEL PRESSURE • Install fuel pressure gauge. • Cycle key on and off several times. • Verify there are no external leaks (Service as necessary) • **Does fuel pressure remain within 34 kPa {0.35 kgf/cm^2, 5 psi} of highest reading after one minute?**	Yes	**For Continuous DTCs P1130, P0171 and P0172:** Go to step 31. **For No Starts:** Go to step 32. **For Fuel Control DTCs displayed with Misfire DTCs:** Go to step 33. **All other DTCs:** Go to step 34.
		No	Excessive pressure loss. Go to next step.

STEP	INSPECTION		ACTION
23	CHECK FUEL PRESSURE LEAKDOWN • Observe all Warnings, Cautions and Notes. • Install fuel pressure tester. • Connect NGS tester. • Key on, engine off. • Access Output Test Mode and active fuel pump to obtain maximum fuel pressure. • Exit Output Test Mode. Key off. • Verify fuel pressure remains within 34 kPa {35 kgf/cm^2, 5 psi} of maximum pressure for 1 minute after turning pump off. • **Does fuel pressure remain within 34 kPa {0.35 kgf/cm^2, 5 psi}?**	Yes	Go to step 25.
		No	Go to next step.
24	CHECK PRESSURE REGULATOR DIAPHRAGM • Key off. • Install fuel pressure tester. • Start and run engine for 10 seconds. • Key off. Wait 10 seconds. • Start and run engine for 10 seconds. • Key off. Remove vacuum hose from fuel pressure regulator. • Inspect for fuel in vacuum hose or regulator port. • **Is vacuum hose and regulator port free of fuel?**	Yes	Go to step 28.
		No	REPLACE fuel pressure regulator. RESET PCM to completely clear DTCs. ☞ After Repair Procedure COMPLETE OBD II Drive Mode. RERUN OBD Test.
25	CHECK FUEL PRESSURE, ENGINE RUNNING • Key off. • Install fuel pressure tester. • Disconnect vacuum hose at fuel pressure regulator and plug it. • Drive vehicle with heavy accelerations while observing fuel pressure gauge reading. • **Does fuel pressure reading hold steady within 21 kPa {0.21 kgf/cm^2, 3 psi} during test?**	Yes	UNPLUG vacuum hose and RECONNECT to fuel pressure regulator. Go to next step.
		No	Go to step 29.
26	CHECK FUEL PRESSURE REGULATOR RESPONSE TO VACUUM • Key off. • Install fuel pressure tester. • Install vacuum gauge to intake manifold. • Start engine and observe both gauges. • Accelerate and decelerate engine speed to vary vacuum gauge reading. • **Does fuel pressure gauge reading increase as vacuum gauge reading decreases, or decrease as vacuum gauge reading increases?**	Yes	REMOVE vacuum gauge and fuel pressure tester. Concern is elsewhere. ☞ 01–01A ENGINE SYMPTOM TROUBLESHOOTING [FS]
		No	Go to next step.
27	CHECK VACUUM SUPPLY • Key off. • Install fuel pressure tester. • Disconnect vacuum hose at the fuel pressure regulator and plug it. • Install hand held vacuum pump to fuel pressure regulator. • Start engine and let run at idle. • Observe fuel pressure while applying vacuum. • **Does fuel pressure change as vacuum changes?**	Yes	SERVICE vacuum system. UNPLUG vacuum hose and RECONNECT to the pressure regulator. RECHECK fuel pressure.
		No	REPLACE fuel pressure regulator. RECHECK fuel pressure.

STEP	INSPECTION		ACTION
28	CHECK FUEL INJECTOR LEAKAGE AND FLOW • Verify that flow rate for each fuel injector is within specification using **SST** (49 L018 901). • **Is flow rate for each injector within specification?**	Yes	VERIFY for other leaks. If none are found, REPLACE fuel pump. RECHECK fuel pressure.
		No	REPLACE damaged fuel injector. RECONNECT all components. RECHECK fuel pressure.
29	CHECK VOLTAGE AT FUEL PUMP VEHICLE HARNESS CONNECTOR • Key off. • Disconnect fuel pump harness connector at fuel pump. Inspect for damaged or pushed out pins, corrosion and loose wires. Service as necessary. • Key on, engine off. • Connect a digital multimeter between fuel pump power circuit and fuel pump ground circuit at fuel pump vehicle harness connector (refer to Electrical and Vacuum Troubleshooting Manual for the correct pin locations). • Enter Output Test Mode and active fuel pump circuit. Record voltage reading. • **Is the voltage greater than 10.5 volts?**	Yes	EXIT Output Test Mode. RECONNECT fuel pump harness connector. Go to next step.
		No	CHECK ground and power circuit. SERVICE as necessary. RECHECK fuel pressure.
30	CHECK SUPPLY FUEL LINE FOR RESTRICTIONS • Key off. • Observe Warnings, Cautions and Notes at beginning of this Pinpoint Test. • Disconnect supply fuel line at fuel rail and at fuel pump. • Inspect supply line for blockage, kinks or pinching. • Apply 21—34 kPa {0.21—0.35 kgf/cm^2, 3—5 psi} regulated shop air to supply line at fuel rail side supply line. • **Does air flow freely through supply line?**	Yes	Air flows freely. REPLACE fuel pump. RECHECK fuel pressure.
		No	SERVICE cause of restriction. RECHECK fuel pressure.
31	CHECK SYSTEM ABILITY TO HOLD FUEL PRESSURE WITH KEY ON • Install fuel pressure gauge. • Cycle key on then off three times. • Turn key on and engine off, monitor fuel pressure gauge. • **Does the fuel pressure remain within 34 kPa {0.35 kgf/cm^2, 5 psi} of the highest reading after 10 seconds?**	Yes	**For Continuous DTCs P1130 and P0171:** Go to step 33.
		No	**For DTCs P0172:** Go to step 35.
32	CHECK ABILITY OF FUEL INJECTOR(S) TO DELIVER FUEL • Pressure gauge installed. • Cycle key three times. • Monitor pressure gauge while cranking the engine for at least five seconds. • **Was there a pressure drop greater than 34 kPa {0.35 kgf/cm^2, 5 psi} while cranking the engine?**	Yes	EEC-V system is not cause of no start. REMOVE fuel pressure gauge. ☞ 01–01A ENGINE SYMPTOM TROUBLESHOOTING [FS] for future diagnosis.
		No	REMOVE fuel pressure gauge. Go to next step.

<table>
<tr><th>STEP</th><th>INSPECTION</th><th></th><th>ACTION</th></tr>
<tr><td>33</td><td>CHECK RESISTANCE OF FUEL INJECTOR(S) AND HARNESS
• Key off.

Note
• This erases Continuous Memory DTCs.

• Disconnect PCM. Inspect for damaged or pushed out pins, corrosion and loose wires. Service as necessary.
• Install breakout box. Leave PCM disconnected.

Note
• If misfire DTCs are displayed with fuel control DTCs, use the misfire DTCs to determine fuel injector circuits requiring testing.

• Measure resistance between suspect fuel injector Test Pin(s) and Test Pin 71/97 at breakout box using chart below.
<table><tr><th>Cylinder Number</th><th>Test pin</th><th>Cylinder Number</th><th>Test pin</th></tr><tr><td>1</td><td>75</td><td>3</td><td>74</td></tr><tr><td>2</td><td>101</td><td>4</td><td>100</td></tr></table>W6U101WD0
• Is resistance between 12.0—16.0 ohms?</td><td>Yes</td><td>Fuel injector and harness resistance is okay.
Go to step 36.</td></tr>
<tr><td></td><td></td><td>No</td><td>Go to next step.</td></tr>
<tr><td>34</td><td>CHECK RESISTANCE OF FUEL INJECTOR HARNESS
• Key off.
• Breakout box installed. PCM disconnected.
• Disconnect fuel injector harness connector at suspect fuel injector.
• Measure resistance between Test Pin 71/97 at breakout box and power circuit pin at suspected fuel injector harness connector.
• Measure resistance between fuel injector Test Pin(s) at breakout box and Fuel Injector Signal Pin at fuel injector connector. (Refer to step 33 for Injector Pin location.)
• Is each resistance less than 5.0 ohms?</td><td>Yes</td><td>Go to next step.</td></tr>
<tr><td></td><td></td><td>No</td><td>SERVICE open harness circuit.
REMOVE breakout box.
RECONNECT PCM and all fuel injectors.
RESET PCM to completely clear DTCs.
☞ After Repair Procedure
COMPLETE OBD II Drive Mode.
RERUN OBD Test.</td></tr>
<tr><td>35</td><td>CHECK FUEL INJECTOR HARNESS CIRCUIT FOR SHORT TO POWER OR GROUND
• Key off.
• Breakout box installed. PCM disconnected.
• Disconnect suspected fuel injector harness.
• Measure resistance between the fuel injector Test Pin(s) (refer to step 33) and Test Pin 71 or 97, 24 and 103 at breakout box.
• Measure the resistance between the Fuel injector Test Pin(s) at the breakout box and chassis ground.
• Is each resistance greater than 10,000 ohms?</td><td>Yes</td><td>Go to next step.</td></tr>
<tr><td></td><td></td><td>No</td><td>SERVICE short circuit.
REMOVE breakout box.
RECONNECT PCM and all fuel injectors.
RESET PCM to completely clear DTCs.
☞ After Repair Procedure
COMPLETE OBD II Drive Mode.
RERUN OBD Test.</td></tr>
</table>

<table>
<tr><th>STEP</th><th>INSPECTION</th><th></th><th>ACTION</th></tr>
<tr><td rowspan="2">36</td><td>CHECK INJECTOR DRIVER SIGNAL

Note
• This test requires standard 12 volt test lamp.

• Key off.
• Install breakout box.
• Connect test lamp between Test Pin 71/97 and suspected fuel injector Test Pin(s).
<table><tr><th>Cylinder Number</th><th>Test pin</th><th>Cylinder Number</th><th>Test pin</th></tr><tr><td>1</td><td>75</td><td>3</td><td>74</td></tr><tr><td>2</td><td>101</td><td>4</td><td>100</td></tr></table>W6U101WD1
Note
• At idle properly operating system will cause dim glow on test lamp.

• Crank or start engine.
• Does test lamp have a dim glow while cranking or running engine?</td><td>Yes</td><td>REMOVE breakout box.
RECONNECT PCM.
Go to next step.</td></tr>
<tr><td>No</td><td>No light and/or continuous bright light.
REPLACE PCM
REMOVE breakout box.
COMPLETE OBD II Drive Mode.
RERUN OBD Test.</td></tr>
<tr><td rowspan="2">37</td><td>FLOW TEST FUEL INJECTOR(S)
• Is leakage and flow within specification?</td><td>Yes</td><td>DTCs P0171, P1130 and P1131:
Go to next step.
DTCs P0172:
The fault that produced the DTC is intermittent.
Go to ENGINE SYMPTOM TROUBLESHOOTING No. 27 with following data:
SHRTFT1, LONGFT1, PIDs and list of possible causes.
For DTCs P1132:
Go to step 41.</td></tr>
<tr><td>No</td><td>REPLACE fuel injector.
RESET PCM to completely clear DTCs.
☞ After Repair Procedure
COMPLETE OBD II Drive Mode.
RERUN OBD Test.</td></tr>
<tr><td rowspan="2">38</td><td>INSPECT INDUCTION SYSTEM FOR AIR LEAKS
• Inspect following areas for signs of air leaks:
  • Inlet tube(s) from air cleaner to throttle body.
  • Gaskets which seal upper and lower intake manifold.
  • Vacuum hoses and lines for cranks and proper connections.
  • PCV system.
• Are there any sings of leaks or damage?</td><td>Yes</td><td>SERVICE as necessary.
RESET PCM to completely clear DTCs.
☞ After Repair Procedure
COMPLETE OBD II Drive Mode.
RERUN OBD Test.</td></tr>
<tr><td>No</td><td>CONTINUOUS DTCs P0171 or P1130:
Fault that produced DTC is intermittent.
Go to ENGINE SYMPTOM TROUBLESHOOTING No. 27 with following data:
SHORTFT1, LONGFT1, O2S11 PIDs and a list of possible causes.
DTCs P1131 and P1130:
Go to next step.</td></tr>
<tr><td rowspan="2">39</td><td>CHECK CYLINDER COMPRESSION

Note
• Use Misfire DTC(s) displayed on prior DTC retrieval to determine which cylinder to perform compression.

• Check cylinder compression.
☞ 01–10A COMPRESSION INSPECTION [FS]
• Are cylinder compression readings within specification?</td><td>Yes</td><td>For DTCs P1131 and P1130:
Go to next step.
For DTC P1132:
Go to step 41.
Misfire DTCs displayed with fuel control DTCs:
Go to appropriate misfire monitor DTC.</td></tr>
<tr><td>No</td><td>SERVICE as necessary.
RESET PCM to completely clear DTCs.
☞ After Repair Procedure
COMPLETE OBD II Drive Mode.
RERUN OBD Test.</td></tr>
</table>

STEP	INSPECTION		ACTION
40	CHECK HEATED OXYGEN SENSOR ABILITY TO GENERATE A VOLTAGE GREATER THAN 0.5 VOLT **Note** • Any vacuum or air leaks can cause DTCs P1131, and P1130. Possible cause: • Leaking vacuum actuators. • Engine sealing (Intake and IAC). • EGR system (valve). • PCV system (hose and valve). • Unmetered air leaks between throttle body and MAF sensor assembly. • Silicone contaminated heated oxygen sensor. • Key off. • Inspect heated oxygen sensor harness for chafing, burned out wires or other damage and service as necessary. • Disconnect suspected heated oxygen sensor from vehicle harness. • Connect digital multimeter to heated oxygen sensor signal and heated oxygen sensor ground or heated oxygen sensor ground at sensor connector. • Run engine at 2,000 rpm for three minutes. • Rerun KOER Self-Test and monitor heated oxygen sensor voltage. • **Is voltage greater than 0.5 volt during or at the end of self-test?**	Yes	Go to step 43.
		No	REPLACE heated oxygen sensor. RESET PCM to completely clear DTCs. ☞ After Repair Procedure COMPLETE OBD II Drive Mode. RERUN OBD Test.
41	ATTEMPT TO GENERATE DTC P1131 • Key off. • Disconnect heated oxygen sensor. • Jumper heated oxygen sensor signal at heated oxygen sensor harness vehicle connector to battery negative post. • Activate Key On Engine Running (KOER) self-test. • **Are DTCs P1131 present?**	Yes	REMOVE jumper. Go to next step.
		No	REMOVE jumper. RECONNECT heated oxygen sensor. DISCONNECT PCM. INSPECT both ends of connector for damaged or pushed out pins, moisture, corrosion, loose pins and SERVICE as necessary. If okay, REPLACE PCM. RERUN KOER Self-test.
42	HEATED OXYGEN SENSOR CHECK • Key off. • Disconnect suspected heated oxygen sensor. • Connect digital multimeter to heated oxygen sensor signal circuit and heated oxygen sensor ground at sensor connector. • Disconnect vacuum hose from vacuum tree. • Start engine and run at 2,000 rpm. • **Does voltage reading indicate less than 0.4 volt within 30 seconds?**	Yes	RECONNECT vacuum hose and heated oxygen sensor. Go to next step.
		No	REPLACE heated oxygen sensor. RECONNECT vacuum hose. RESET PCM to completely clear DTCs. ☞ After Repair Procedure COMPLETE OBD II Drive Mode. RERUN OBD Test.

STEP	INSPECTION		ACTION
43	MONITOR HEATED OXYGEN SENSOR (PID) FOR PROPER SWITCHING • Key on, engine running. • Engine at operating temperature. • Connect NGS tester. **Note** • Heated oxygen sensor PID displayed as O2S on NGS tester. • Access PID of suspected heated oxygen sensor. • O2S11 • Monitor PID while wiggling, bending, and shaking small sections of harness from PCM to heated oxygen sensor. • **Did heated oxygen sensor voltage stay high (greater than 0.45 volt) or low (less than 0.45 volt)?**	Yes	ISOLATE cause of lack of heated oxygen sensor switching. Service harness or connector. RESET PCM to completely clear DTCs. ☞ After Repair Procedure COMPLETE OBD II Drive Mode. RERUN OBD Test.
		No	Go to next step.
44	TEST DRIVE WHILE MONITORING HEATED OXYGEN SENSOR PID FOR PROPER SWITCHING **Note** • This test step requires an observer to monitor PID for proper operation. • NGS tester connected. • While observer views heated oxygen sensor PID, test drive vehicle under different road conditions in attempt to simulate original fault. • **Does heated oxygen sensor appear to switch properly?**	Yes	UNABLE to duplicate fault. RESET PCM to completely clear DTCs. ☞ After Repair Procedure Testing complete at this time.
		No	REPLACE heated oxygen sensor. RESET PCM to completely clear DTCs. ☞ After Repair Procedure COMPLETE OBD II Drive Mode. RERUN OBD Test.

KOEO DTC P0230	Fuel pump primary circuit malfunction
DESCRIPTION	• DTC P0230 indicates a fuel pump circuit failure

[Possible Cause]
- Damaged Fuel Pump Relay
- Damaged PCM
- Open or shorted circuit

STEP	INSPECTION		ACTION
1	CHECK FOR POWER TO FUEL PUMP RELAY • Disconnect the fuel pump relay. • Key on, engine off. • Measure voltage between power circuit at the fuel pump relay vehicle harness connector and chassis ground. • **Is voltage greater than 10.5 volts?**	Yes	Go to next step.
		No	SERVICE open in power circuit between ignition switch and fuel pump relay. RECONNECT fuel pump relay. RERUN OBD Test.
2	CHECK FUEL PUMP RELAY • **Is fuel pump relay okay?**	Yes	Go to next step.
		No	REPLACE fuel pump relay. RERUN OBD Test.

3	CHECK FUEL PUMP CIRCUIT FOR SHORT TO POWER
	• Key off.
	• Disconnect fuel pump relay.
	• Disconnect PCM. Inspect for damaged or pushed out pins, corrosion, loose wires, etc. Service as necessary.
	• Install breakout box. Leave PCM disconnected.
	• Key on, engine off.
	• Measure voltage between appropriate Test Pin at breakout box and chassis ground.
	  • With immobilizer system=Test Pin 70
	  • Without immobilizer system=Test Pin 80
	• **Is voltage less than 1.0 volt?**
		Yes	Go to next step.

		No	SERVICE short to power. REMOVE breakout box. RECONNECT all components. RERUN OBD Test.

4	CHECK FUEL PUMP CIRCUIT FOR SHORT TO GROUND
	• Key off.
	• Disconnect NGS tester from DLC.
	• Breakout box installed. PCM disconnected.
	• Disconnect fuel pump relay.
	• Measure resistance between appropriate Test Pin and Test Pins 51 or 103 and 91 at breakout box.
	  • With immobilizer system=Test Pin 70
	  • Without immobilizer system=Test Pin 80
	• **Is resistance greater than 10,000 ohms?**
		Yes	Go to next step.

		No	SERVICE short circuit. REMOVE breakout box. RECONNECT all components. RERUN OBD Test.

5	CHECK FUEL PUMP CIRCUIT CONTINUITY
	• Key off.
	• Breakout box installed, PCM disconnected.
	• Disconnect fuel pump relay.
	• Measure resistance between Fuel Pump circuit at fuel pump relay vehicle harness connector and appropriate Test Pin at breakout box.
	  • With immobilizer system=Test Pin 70
	  • Without immobilizer system=Test Pin 80
	• **Is resistance less than 5.0 ohms?**
		Yes	REPLACE PCM.
			RECONNECT all components.
			RERUN OBD Test.

		No	SERVICE open circuit. REMOVE breakout box. RECONNECT all components. RERUN OBD Test.

DTC	P0300	Random misfire detected
	P0301	Cylinder No.1 misfire detected
	P0302	Cylinder No.2 misfire detected
	P0303	Cylinder No.3 misfire detected
	P0304	Cylinder No.4 misfire detected
DESCRIPTION		• DTC P0300 indicates multiple cylinders misfiring or Camshaft Position (CMP) sensor failure resulting in cylinder misfire • DTCs P0301, P0302, P0303 or P0304 indicate specific cylinder misfiring

[Possible Cause]
- Ignition system
- Fuel injection
- Fuel pressure
- Evaporative Emission System
- Purge solenoid valve
- Base engine
- Running out of fuel

Warning
Following troubleshooting flow chart contains fuel system diagnosis and repair procedures. Read following warnings before performing fuel system service:
- **Fuel vapor is hazardous. It can easily ignite, causing serious injury and damage. Always keep sparks and flames away from fuel.**
- **Fuel line spills and leaks are dangerous. Fuel can ignite and cause serious injuries or death and damage. Fuel can also irritate skin and eyes. To prevent this, always complete "BEFORE REPAIR PROCEDURE" and "AFTER REPAIR PROCEDURE" described in this manual.**
  ☞ 01–14 BEFORE REPAIR PROCEDURE
  ☞ 01–14 AFTER REPAIR PROCEDURE

STEP	INSPECTION		ACTION
1	CHECK POSSIBLE CAUSES TO MISFIRE **Note** • Running out of fuel may turn on the MIL and possibly store Continuous Misfire DTC. • **Has vehicle recently run out of fuel?**	Yes	OBD II system okay. RESET PCM to completely clear DTCs. ☞ After Repair Procedure RETURN vehicle to customer.
		No	Go to next step.
2	CHECK FOR OTHER NON-MISFIRE CONTINUOUS MEMORY DTCS Check for other non-misfire Continuous Memory DTCs which could cause the Misfire DTC. Possible causes: • CMP sensor • Ignition coil primary circuit • Knock sensor • **Are other non-misfire Continuous Memory DTCs present?**	Yes	ADDRESS next Continuous DTC. DISREGARD Misfire DTC at this time. Go to DTC charts and PROCEED as required.
		No	Go to next step.
3	CHECK FOR ON-DEMAND SELF-TEST DTCS **Note** • Check for any Key On Engine Off (KOEO) DTCs, which could cause the misfire DTC. • Perform KOEO self-tests. • **Are any DTCs presented?**	Yes	Go to DTC charts and PROCEED as required.
		No	CHECK spark plugs and secondary wires. If okay, go to next step.
4	CHECK FOR OTHER KEY ON ENGINE RUNNING (KOER) DTCS **Note** • Check for any KOER DTCs which could cause misfire DTCs. • **Are any KOER DTCs displayed on NGS tester?**	Yes	**If DTCs P1131 is present:** Go to next step. **All others:** Go to DTC charts and PROCEED as required.
		No	Go to next step.

<table>
<tr><th>STEP</th><th>INSPECTION</th><th></th><th>ACTION</th></tr>
<tr><td rowspan="2">5</td><td rowspan="2">CHECK RESISTANCE OF INJECTOR(S) AND HARNESS
• Key off.
• Disconnect PCM. Inspect for damaged or pushed out pins, corrosion, loose wires etc. Service as necessary.
• Install breakout box. Leave PCM disconnected.
• Measure resistance between suspect fuel injector test pin and Test Pin 71 or 97 at the breakout box.
• Is the resistance between 12.0—16.0 ohms?</td><td>Yes</td><td>Fuel injector and harness resistance is okay.
Go to next step.</td></tr>
<tr><td>No</td><td>Go to step 35 of pinpoint test for DTC P0171, P0172, P1130, P1131, P1132 step 35 to diagnose fuel injectors.</td></tr>
<tr><td rowspan="2">6</td><td rowspan="2">CHECK INJECTOR DRIVER SIGNAL

Note
• Requires a standard 12 volt test lamp. A properly operating system will slow dim glow on Test Lamp.

• Key off.
• Breakout box installed.
• Connect PCM to breakout box.
• Connect Test Lamp between Test Pin 71 or 97 and suspect injector Test Pin.
<table><tr><th>Cylinder Number</th><th>Test pin</th><th>Cylinder Number</th><th>Test pin</th></tr><tr><td>1</td><td>75</td><td>3</td><td>74</td></tr><tr><td>2</td><td>101</td><td>4</td><td>100</td></tr></table>W6U101WD2
• Start engine.
• Does test lamp emit dim glow while engine is running?</td><td>Yes</td><td>Go to next step.</td></tr>
<tr><td>No</td><td>No light or bright light.
REPLACE PCM.
REMOVE breakout box.
COMPLETE OBD II Drive Mode.
RERUN OBD Test.</td></tr>
<tr><td rowspan="2">7</td><td rowspan="2">CHECK FUEL PRESSURE
• Key off.
• Install fuel pressure gauge.
• Start and run engine at idle. Record fuel pressure.
• Increase engine speed to 2,500 rpm and maintain for one minute. Note and compare fuel pressure.
• Is fuel pressure between 210—310 kPa {2.1—3.1 kgf/cm^2, 31—46 psi}?</td><td>Yes</td><td>Go to next step.</td></tr>
<tr><td>No</td><td>CHECK fuel system.</td></tr>
<tr><td rowspan="2">8</td><td rowspan="2">CHECK ABILITY OF FUEL SYSTEM TO HOLD FUEL PRESSURE
• Start and run engine at idle. Note fuel pressure.
• Increase engine speed to 2,500 rpm and maintain for one minute.
• Visually check for fuel leaking at injector O-ring, fuel pressure regulator and fuel lines to fuel charging assembly. Service as necessary.
• Turn engine off.
• Key on, engine off.
• Does fuel pressure remain at specification within 16.5 kPa {0.16 kgf/cm^2, 5 psi} for 60 seconds?</td><td>Yes</td><td>Go to next step.</td></tr>
<tr><td>No</td><td>CHECK Fuel Delivery System is at fault.
☞ 01–14 FUEL INJECTOR INSPECTION, Fuel Leakage Test [FS]</td></tr>
</table>

STEP	INSPECTION		ACTION
9	CHECK FUEL INJECTOR FOR FLOW AND LEAKAGE • Verify flow rate for each fuel injector is within specification using **SST** (49 L018 901). • **Is flow rate for each fuel injector within specification?**	Yes	Fuel delivery system is not likely to have caused misfire DTC. Go to next step.
		No	REPLACE or CLEAN inoperative fuel injector(s) as required. RESET PCM to completely clear DTCs. ☞ After Repair Procedure COMPLETE OBD II Drive Mode. RERUN OBD Test.
10	CHECK VACUUM SYSTEM • Inspect all vacuum lines for damage, or pinched lines, cracks, proper routing and assembly. • **Is the vehicle vacuum system okay?**	Yes	Go to next step.
		No	SERVICE the vacuum system. RESET PCM to completely clear DTCs. ☞ After Repair Procedure COMPLETE OBD II Drive Mode. RERUN OBD Test.
11	CHECK EVAPORATIVE EMISSION SYSTEM Misfire Monitor can be influenced by Evaporative Emission System. Steps 11—14 will diagnose Evaporative Emission System. • Check charcoal canister for fuel saturation. • **Is there excess amount of liquid fuel present in charcoal canister.**	Yes	REPLACE charcoal canister. RESET PCM to completely clear DTCs. ☞ After Repair Procedure COMPLETE OBD II Drive Mode. RERUN OBD Test.
		No	Go to next step.
12	CHECK VACUUM IN EVAPORATIVE EMISSION SYSTEM • Check for blockage/restriction or cut hoses between engine vacuum port and charcoal canister. • Check for blockage in fuel tank vent system. • **Is there fault indicated?**	Yes	REPLACE damaged vacuum hoses or REMOVE blockage/restrictions. RESET PCM to completely clear DTCs. ☞ After Repair Procedure COMPLETE OBD II Drive Mode. RERUN OBD Test.
		No	Go to next step.
13	CHECK PURGE SOLENOID VALVE This step will verify the mechanical integrity of purge solenoid valve. Solenoid and circuit have been checked electrically and reported during KOEO self-test. • Key off. • Disconnect purge solenoid valve. • Connect 12 volt DC power source to solenoid. **Caution** • **Must be observed for proper pin orientation.** • Connect positive power source to power circuit and negative lead to purge solenoid valve circuit at purge solenoid valve harness connector. • Apply 53 kPa {407 mmHg, 16 inHg} of vacuum to manifold side of purge solenoid valve. Apply power source. • **Does solenoid open and pass air freely?**	Yes	Evaporative system is functioning properly. Go to next step for base engine concerns.
		No	REPLACE purge solenoid valve. RESET PCM to completely clear DTCs. ☞ After Repair Procedure COMPLETE OBD II Drive Mode. RERUN OBD Test.
14	CHECK FOR BASE ENGINE CONCERNS The purpose of this step is to determine if there are any base engine concerns that may have caused the misfire DTC or drive concern. Perform the following tests in order to evaluate base engine integrity. • Perfom engine compression test. • Perform dynamic valve train analysis. • Check positive crankcase ventilation system. • Check possible leakage points. ☞ 01–10A COMPRESSION INSPECTION [FS] • **Is any service required?**	Yes	SERVICE as necessary. RESET PCM to completely clear DTCs. ☞ After Repair Procedure COMPLETE OBD II Drive Mode. RERUN OBD Test.
		No	Cause of Misfire DTC is intermittent and diagnosis will be in Ignition System. Check intermittent poor connection or component malfunction (SERVICE or REPLACE as necessary). ☞ 01–18 IGNITION SYSTEM INSPECTION

DTC P0320	Ignition engine speed input circuit malfunction
DESCRIPTION	• Two succesive Profile Ignition Pickup (PIP) pulses occurred resulting in an engine misfire or stall

[Possible Cause]
- Loose wires/connectors
- Arcing secondary ignition components
- On-board transmitter (2-way radio)

STEP	INSPECTION		ACTION
1	CHECK FOLLOWING COMPONENTS • Loose wires/connectors. • Arcing secondary ignition components (coil, wires, plugs, etc.). • On-board transmitter (2-way radio). • **Are any of the above present? Verify all 2-way radio installation instructions regarding routing of antenna and power lead.**	Yes	SERVICE as necessary. RERUN OBD Test.
		No	**For No starts:** Go to ENGINE SYMPTOM TROUBLESHOOTING No.5. **For Intermittent faults:** Go to ENGINE SYMPTOM TROUBLESHOOTING No.27. **All others:** Loss of PIP. REPLACE PCM.

DTC P0325	Knock sensor circuit malfunction
DESCRIPTION	• DTC P0325 indicates misfire of spark knock system failed.

[Possible Cause]
- PCM not receiving signal at high altitude
- Open or short in harness
- Damaged knock sensor
- Damaged PCM

STEP	INSPECTION		ACTION
1	CHECK KNOCK SENSOR VOLTAGE • Key off. • Disconnect PCM. Inspect for damage or pushed out pins, corrosion and loose wires. Service as necessary. • Install breakout box. • Key on, engine running. • Read DC voltage between terminal 57 and 77 or 103 at the breakout box. • **Is reading between 2.2 and 2.6 volts?**	Yes	Go to next step.
		No	**Less than 2.2 volts:** Go to step 4. **Greater than 2.6 volts:** Go to step 6.
2	CHECK FOR INTERMITTENT CIRCUIT FAULT • Key on. • While viewing voltmeter, grasp vehicle harness as close to knock sensor as possible. Shake and bend small section of harness from knock sensor to PCM. • Tap PCM and knock sensor connectors if possible. • **Is knock sensor reading changing?**	Yes	ISOLATE fault and service as required. RECONNECT PCM. RESET PCM to completely clear DTCs. ☞ After Repair Procedure COMPLETE OBD II Drive Mode. RERUN OBD Test.
		No	Go to next step.
3	CHECK FOR VOLTAGE INCREASE • Key off. • PCM disconnected. • Connect NGS tester. • Start and run engine. • Monitor voltage on AC setting at idle and at 3,000 rpm between suspect knock sensor and ground. • **Does AC voltage reading increase?**	Yes	REPLACE PCM. RECONNECT all components. RESET PCM to completely clear DTCs. ☞ After Repair Procedure COMPLETE OBD II Drive Mode. RERUN OBD Test.
		No	Go to next step.

STEP	INSPECTION		ACTION
4	CHECK RESISTANCE OF KNOCK SENSOR CIRCUIT • Key off. • Breakout box installed. PCM disconnected. • Disconnect knock sensor. • Measure resistance of knock sensor signal circuit between Test Pin 57 at breakout box and same signal pin at vehicle harness connector. • Where applicable, measure resistance between Test Pin 24 at breakout box and shield pin at vehicle harness connector. • **Is resistance less than 5.0 ohms?**	Yes	Go to next step.
		No	SERVICE open circuit. RECONNECT all components. RESET PCM to completely clear DTCs. ☞ After Repair Procedure COMPLETE OBD II Drive Mode. RERUN OBD Test.
5	CHECK KNOCK SENSOR CIRCUIT SHORT TO GROUND • Key off. • Breakout box installed. PCM disconnected. • Knock sensor disconnected. • Measure resistance between Test Pin 57 and Test Pins 77 or 103 at breakout box and chassis ground. • **Is resistance greater than 10,000 ohms?**	Yes	REPLACE knock sensor. RECONNECT all components. RESET PCM to completely clear DTCs. ☞ After Repair Procedure COMPLETE OBD II Drive Mode. RERUN OBD Test.
		No	SERVICE short circuit. RECONNECT all components. RESET PCM to completely clear DTCs. ☞ After Repair Procedure COMPLETE OBD II Drive Mode. RERUN OBD Test.
6	CHECK KNOCK SENSOR CIRCUIT SHORT TO POWER • Key off. • Breakout box installed. • Knock sensor disconnected. • Key on, engine off. • Measure voltage between Test Pin 57 and Test Pins 77 or 103 at the breakout box. • **Is voltage less than 0.5 volts?**	Yes	REPLACE PCM. RECONNECT all components. RESET PCM to completely clear DTCs. ☞ After Repair Procedure COMPLETE OBD II Drive Mode. RERUN OBD Test.
		No	SERVICE short to ground. RECONNECT all components. RESET PCM to completely clear DTCs. ☞ After Repair Procedure COMPLETE OBD II Drive Mode. RERUN OBD Test.
7	CHECK RESISTANCE OF KNOCK SENSOR • Key off. • Disconnect PCM from breakout box. • Knock sensor connected. • Measure resistance between Test Pin 57 and ground at breakout box. • **Is resistance greater than 5.11 megaohm?**	Yes	REPLACE knock sensor. RECONNECT all components. RESET PCM to completely clear DTCs. ☞ After Repair Procedure COMPLETE OBD II Drive Mode. RERUN OBD Test.
		No	REPLACE PCM. RECONNECT all components. RESET PCM to completely clear DTCs. ☞ After Repair Procedure COMPLETE OBD II Drive Mode. RERUN OBD Test.

DTC P0340	CMP sensor circuit malfunction
DESCRIPTION	• DTC P0340 indicates that self-test has detected Camshaft Position (CMP) sensor circuit failure

[Possible Cause]
- CMP sensor circuit open
- CMP sensor circuit shorted to ground
- CMP sensor circuit shorted to power
- CMP senosr ground open
- Power circuit open
- Damaged CMP sensor
- Damaged PCM

STEP	INSPECTION		ACTION
1	START ENGINE • Start engine. • **Will engine start?**	Yes	Go to next Step.
		No	DTC P0340 is not the cause of no start condition. Go to ENGINE SYMPTOM TROUBLESHOOTING No.5.
2	CLEAR AND ATTEMPT TO RE-GENERATE DTC P0340 • RESET PCM to completely clear DTCs. ☞ After Repair Procedure • COMPLETE OBD II Drive Mode. • Start engine. • Increase rpm to greater than 1,500 rpm for 10 seconds. Repeat two times. • Key off. • Retrieve all Continuous Memory DTCs. • **Is DTC P0340 present?**	Yes	Go to next step.
		No	The fault that produced DTC P0340 is intermittent. Intermittent poor connection or component malfunction (REPAIR or REPLACE as necessary). Go to ENGINE SYMPTOM TROUBLESHOOTING No.27.
3	CHECK POWER CIRCUIT TO CMP SENSOR • Key off. • Disconnect CMP sensor. • Key on, engine off. • Measure voltage between power circuit at CMP vehicle harness connector and battery negative post. • **Is voltage greater than 10.5 volts?**	Yes	Go to next step.
		No	SERVICE open in CMP sensor power circuit. RECONNECT all components. RESET PCM to completely clear DTCs. ☞ After Repair Procedure COMPLETE OBD II Drive Mode. RERUN OBD Test.
4	CHECK GROUND CIRCUIT TO CMP SENSOR • Key off. • CMP sensor disconnected. • Measure resistance between ground circuit at CMP sensor harness connector and battery negative post. • **Is resistance less than 5.0 ohms?**	Yes	Go to next step.
		No	SERVICE open in CMP sensor ground circuit. RESET PCM to completely clear DTCs. ☞ After Repair Procedure COMPLETE OBD II Drive Mode. RERUN OBD Test.

5	CHECK CONTINUITY TO PCM
	• Key off.
	• CMP sensor disconnected.
	• Disconnect PCM. Inspect for damaged or pushed out pins, corrosion, loose wires, etc. Service as necessary.
	• Install breakout box.
	• Measure resistance between signal circuit at CMP sensor vehicle harness connector and CMP Test Pin at breakout box.
	  • CMP sensor terminal A – Test Pin 85
	  • CMP sensor terminal B – Test Pin 87
	• **Are resistance measurements less than 5.0 ohms?**
		Yes	Go to next step.

		No	SERVICE open circuit. REMOVE breakout box. RECONNECT all components. RERUN OBD Test.
6	CHECK CMP SIGNAL CIRCUIT FOR SHORT TO POWER • Key off. • CMP sensor disconnected. • Breakout box installed. • Key on, engine off. • Measure voltage between CMP Test Pin 85 and Test Pins 51 and 103 at breakout box. • **Is voltage less than 1.0 volt?**	Yes	Go to next step.
		No	SERVICE CMP circuit for short to power. REMOVE breakout box. RECONNECT all components. RERUN OBD Test.

STEP	INSPECTION		ACTION
7	CHECK CMP SIGNAL CIRCUIT FOR SHORT TO GND OR PCM GROUND (BETWEEN PCM AND CMP SENSOR GROUND CIRCUIT) • Key off. • Breakout box installed. • CMP sensor disconnected. • Disconnect NGS tester from DLC. • Measure resistance between Test Pin 85 and Test Pins 51, 103 and 91. • **Is each resistance greater than 10,000 ohms?**	Yes	Go to next step.
		No	SERVICE CMP signal circuit for short to ground or PCM ground. REMOVE breakout box. RECONNECT all components. RERUN OBD Test.
8	CHECK FOR SHORTS IN PCM • Key off. • CMP sensor disconnected. • Breakout box installed. • Measure resistance between Test Pin 85 and Test Pins 51, 103, 71, 97, 91 at breakout box. • **Is each resistance greater than 500 ohms?**	Yes	Go to next step.
		No	REPLACE PCM. REMOVE breakout box. RECONNECT all components. RERUN OBD Test.
9	CHECK CMP SENSOR OUTPUT • Key off. • Breakout box installed. PCM connected. • Reconnect CMP sensor. • Set voltmeter to AC (to monitor less than 5.0 volts). • Measure voltage between Test Pin 85 and Test Pins 51 and 103 at breakout box while running engine at varying rpm. • **Does AC voltage vary greater than 0.1 volt AC?**	Yes	REPLACE PCM. REMOVE breakout box. RECONNECT all components. RERUN OBD Test.
		No	REPLACE CMP sensor. REMOVE breakout box. RECONNECT all components. RERUN OBD Test.

DTC P0400	EGR flow malfunction
DESCRIPTION	• DTC P0400 indicates an EGR valve/flow failure

[Possible Cause]
- Damaged EGR valve
- Damaged EGR boost sensor
- Damaged EGR boost solenoid valve
- Restriction in exhaust system
- Damaged PCM
- Damaged harness connector
- Damaged harness

STEP	INSPECTION		ACTION
1	OUTPUT ALL DTCS • Verify EGR boost solenoid valve connection and repair as necessary. • Output all continuous memory, KOEO and KOER self-test DTCs. ☞ 01–01A ENGINE ON-BOARD DIAGNOSIS [FS], Rettieving DTCs Procedure • **Are any other DTCs displayed on NGS tester?**	Yes	Go to DTC charts and PROCEED as required.
		No	Go to next step.

2	CHECK FOR UNMETERED AIR LEAKS
	• Carefully inspect following areas for potential air leaks:
	  • Hoses connecting to MAF sensor assembly.
	  • Hoses connecting to throttle body.
	  • Intake manifold gasket leaks.
	  • Positive crankcase ventilation (PCV) disconnected.
	  • Vacuum lines disconnected.
	  • Improperly seated engine oil dipstick and tube.
	  • Exhaust leaks at flanges and gaskets.
	• **Are there any air leaks?**
		Yes	Air leaks located.
			SERVICE source of air leak.
			RESET PCM to completely clear DTCs.
			☞ After Repair Procedure
			COMPLETE OBD II Drive Mode.
			RERUN OBD Test.

		No	Go to next step.
3	CHECK CYLINDER COMPRESSION • Check cylinder compression. ☞ 01–10A COMPRESSION INSPECTION [FS] • **Are cylinder compression readings within specification?**	Yes	Go to next step.
		No	SERVICE as necessary. RESET PCM to completely clear DTCs. ☞ After Repair Procedure COMPLETE OBD II Drive Mode. RERUN OBD Test.
4	CHECK OPERATION OF EGR VALVE • Key on and listen for initialization noise (clicks) of EGR valve by using screwdriver or soundscope. **Note** • EGR valve initialization is closing action of valve observed before and after engine is started, and when engine is stopped. • **Does EGR valve initialization noise heard?**	Yes	Go to step 9.
		No	Go to next step.
5	CHECK POWER CIRCUIT TO EGR VALVE • Key off. • EGR valve disconnected. • Key on, engine off. • Measure voltage between power circuit and chassis ground at EGR valve vehicle harness connector. • **Is EGR valve power voltage greater than 10.5 volts?**	Yes	Go to next step.
		No	SERVICE open in EGR valve power circuit. RECONNECT all components. RESET PCM to completely clear DTCs. ☞ After Repair Procedure COMPLETE OBD II Drive Mode. RERUN OBD Test.
6	CHECK RESISTANCE OF EGR VALVE • Key off. • EGR valve disconnected. • Measure resistance of EGR valve coils. • **Is each resistance approximately 22 ohms?**	Yes	Go to next step.
		No	REPLACE EGR valve. RECONNECT all components. RESET PCM to completely clear DTCs. ☞ After Repair Procedure COMPLETE OBD II Drive Mode. RERUN OBD Test.

STEP	INSPECTION		ACTION
7	CHECK EGR VALVE CIRCUIT CONTINUITY • Key off. • Disconnect PCM. Inspect for damaged or pushed out pins, corrosion, loose wires, etc. Service as necessary. • Install breakout box. Leave PCM disconnected. • Measure resistance between EGR valve Test Pin at the breakout box and EGR valve vehicle harness connector. Record readings. Test pin / EGR valve terminal 68 / E 72 / A 46 / B 56 / F W6U101WD3 • **Is each resistance less than 5.0 ohms?**	Yes	Go to next step.
		No	SERVICE open in EGR valve harness circuit. REMOVE breakout box. RECONNECT all components. RESET PCM to completely clear DTCs. ☞ After Repair Procedure COMPLETE OBD II Drive Mode. RERUN OBD Test.
8	CHECK EGR VALVE CIRCUIT FOR SHORT TO POWER AND SHORT TO GROUND • Key off. • EGR valve disconnected. • Breakout box installed. • Measure resistance between Test Pins 46, 56, 68, 72 and Test Pins 71, 97 and 90 at breakout box. • Measure resistance between Test Pins 46, 56, 68, 72 and Test Pins 51,103 and 91 at breakout box. • **Is each resistance greater than 10,000 ohms?**	Yes	REPLACE EGR valve. REMOVE breakout box. RECONNECT all components. RESET PCM to completely clear DTCs. ☞ After Repair Procedure COMPLETE OBD II Drive Mode. RERUN OBD Test.
		No	SERVICE short in EGR valve harness circuit. REMOVE breakout box. RECONNECT all components. RESET PCM to completely clear DTCs. ☞ After Repair Procedure COMPLETE OBD II Drive Mode. RERUN OBD Test.
9	CHECK POWER CIRCUIT TO EGR BOOST SOLENOID VALVE • Key off. • EGR boost solenoid valve disconnected. • Key on, engine off. • Measure voltage between power circuit and chassis ground at EGR boost solenoid valve vehicle harness connector. • **Is EGR boost solenoid valve power circuit voltage greater than 10.5 volts?**	Yes	Go to next step.
		No	SERVICE open in EGR boost solenoid valve power circuit. RECONNECT all components. RESET PCM to completely clear DTCs. ☞ After Repair Procedure COMPLETE OBD II Drive Mode. RERUN OBD Test.
10	CHECK RESISTANCE OF EGR BOOST SOLENOID VALVE • Key off. • EGR boost solenoid valve disconnected. • Measure EGR boost solenoid valve resistance. • **Is resistance between 30 and 70 ohms?**	Yes	Go to next step.
		No	REPLACE EGR boost solenoid valve. RESET PCM to completely clear DTCs. ☞ After Repair Procedure COMPLETE OBD II Drive Mode. RERUN OBD Test.
11	CHECK EGR BOOST SOLENOID VALVE CIRCUIT CONTINUITY • Key off. • EGR boost solenoid valve disconnected. • Disconnect PCM. Inspect for damaged or pushed out pins, corrosion, loose wires, etc. Service as necessary. • Install breakout box. • Measure resistance between Test Pin 98 at breakout box and EGR boost solenoid valve circuit at vehicle harness connector. • **Is resistance less than 5.0 ohms?**	Yes	Go to next step.
		No	SERVICE open in EGR boost solenoid valve harness circuit. REMOVE breakout box. RECONNECT all components. RESET PCM to completely clear DTCs. ☞ After Repair Procedure COMPLETE OBD II Drive Mode. RERUN OBD Test.

STEP	INSPECTION		ACTION
12	CHECK EGR BOOST SOLENOID VALVE CIRCUIT FOR SHORT TO POWER AND SHORT TO GROUND • EGR boost solenoid valve disconnected. • Breakout box installed. • Measure resistance between Test Pin 98 and Test Pins 71, 97 and 90 at breakout box. • Measure the resistance between Test Pin 98 and Test Pins 51, 103 and 91 at breakout box. • **Is each resistance greater than 10,000 ohms?**	Yes	REMOVE breakout box. RECONNECT all components. Go to next step.
		No	SERVICE short in EGR boost solenoid valve harness circuit. REMOVE breakout box. RECONNECT all components. RESET PCM to completely clear DTCs. ☞ After Repair Procedure COMPLETE OBD II Drive Mode. RERUN OBD Test.
13	CHECK OPERATION OF EGR BOOST SOLENOID VALVE • Key off. • Breakout box installed. PCM connected. • Disconnect vacuum line from EGR boost sensor solenoid valve to intake manifold vacuum at solenoid valve. • Install vacuum pump at input port of EGR boost solenoid valve and apply–27— –30 kPa {–203— –247 mmHg, –8— –10 inHg} of vacuum. • Disconnect vacuum line from EGR boost solenoid valve to EGR boost sensor at sensor. Inspect vacuum line for damage, service as necessary. • Install vacuum gauge at unattached end of vacuum line. • Key on. • Jumper Test Pin 98 to ground at breakout box and observe vacuum gauge. Remove jumper. • Apply –27— –30 kPa {–203— –247 mmHg, –8— –10 inHg} of vacuum to EGR boost sensor solenoid valve once again. • Again jumper Test Pin 98 to ground at breakout box and observe vacuum gauge. Remove jumper. • Key off. • **Was vacuum signal indicated at any time by vacuum gauge?**	Yes	The fault that produced DTC P0400 is intermittent, and cannot be identified at this time. REMOVE vacuum pump and gauge. RECONNECT all vacuum lines. Intermittent poor connection or component malfunction. (SERVICE or REPLACE as necessary). Go to ENGINE SYMPTOM TROUBLESHOOTING No. 27.
		No	REPLACE damaged EGR boost solenoid valve. REMOVE breakout box. REMOVE vacuum gauge and vacuum pump. RECONNECT all components. RESET PCM to completely clear DTCs. ☞ After Repair Procedure COMPLETE OBD II Drive Mode. RERUN OBD Test.

DTC	P0420 P0421	Catalyst efficiency below threshold (Except California) Catalyst efficiency below threshold (California)
DESCRIPTION		• DTCs P0420, P0421 indicate catalyst system efficiency is below acceptable threshold

[Possible Cause]

- Use of leaded fuel
- Oil contamination
- Cylinder misfiring
- Damaged heated oxygen sensor
- Damaged ECT sensor
- Downstream heated oxygen sensor wires improperly connected
- Fuel pressure too high
- Damaged exhaust system pipe
- Damaged exhaust manifold
- Damaged silencer/tailpipe component
- Damaged catalytic converter

Warning

Following troubleshooting flow chart contains fuel system diagnosis and repair procedures. Read following warnings before performing fuel system service:

- **Fuel vapor is hazardous. It can easily ignite, causing serious injury and damage. Always keep sparks and flames away from fuel.**
- **Fuel line spills and leaks are dangerous. Fuel can ignite and cause serious injuries or death and damage. Fuel can also irritate skin and eyes. To prevent this, always complete "BEFORE REPAIR PROCEDURE" and "AFTER REPAIR PROCEDURE" described in this manual.**
  ☞ 01–14 BEFORE REPAIR PROCEDURE
  ☞ 01–14 AFTER REPAIR PROCEDURE

STEP	INSPECTION		ACTION
1	CHECK FOR MISFIRE MONITOR DTC **Note** • Complete the spark timing check in OBD Test before proceeding with this step. Spark timing retarded below specification may increase exhaust gas temperature and decrease catalyst efficiency overtime. ☞ 01–17 IGNITION SYSTEM INSPECTION **Note** Be sure customer has not: • Refueled vehicle with leaded gasoline. • Experienced excessive oil consumption. **Note** • Internal deterioration of catalytic converter is usually caused by abnormal engine operation upstream of catalyst. Events that may produce higher than normal temperature in catalyst are particularly suspect. For example, misfiring can cause higher than normal catalyst operating temperature higher than normal. • Key on, engine off. • Retrieve and record all Continuous Memory DTCs. • **Were any of following misfire monitor DTCs recorded: P0300, P0301, P0302, P0303 and P0304?**	Yes	Go to pinpoint test for misfire DTCs.
		No	Go to next step.

STEP	INSPECTION		ACTION
2	CHECK FOR HEATED OXYGEN SENSOR MONITOR DTC **Note** • Incorrect heated oxygen sensor signal input (e.g. rich/lean input signal when engine is operating under lean/rich conditions) may cause an abnormal temperature increase in catalyst. **Note** • Non-California applications will not have active Heated Oxygen Sensor Monitor. As result, Catalyst Efficiency Monitor DTC can be generated for rear heated oxygen sensor concern. To check for heated oxygen sensor concerns, go to heated oxygen sensor inspection. If any repairactions are necessary procedure, run KOER self-test to verify repair. If repair actions are not necessary, go to step 3. • **Were any of following heated oxygen sensor monitor DTCs recorded in step 1: P0136?**	Yes	Go to appropriate DTC test.
		No	Go to next step.
3	CHECK FOR ECT SENSOR DTCS **Note** • ECT sensor DTCs can indicate that thermostat is not operating correctly or that engine coolant level is not filled to specifications. Resulting in above normal operating temperatures. • **Were any of following ECT sensor DTCs recorded: P0117, P0118, P0125 and P1117?**	Yes	Go to appropriate DTC test.
		No	Go to next step.
4	CHECK FOR ANY OTHER DTCS • **Were any other DTCs recorded in step 1?**	Yes	Go to appropriate DTC test.
		No	Go to next step.
5	CHECK DOWNSTREAM HEATED OXYGEN SENSOR WIRING AND PCM CONNECTIONS **Note** • If of downstream heated oxygen sensor continuous are interchanged or crossed, Catalyst Efficiency Monitor Test will fail. • Inspect wiring of each rear heated oxygen sensor for proper routing and connection. • Disconnect PCM. Inspect for damaged or pushed out pins, corrosion and loose wires, etc. Service as necessary. • **Are there any wiring or connection concerns?**	Yes	SERVICE any wiring or connection concerns. For PCM pin concerns, REPLACE PCM. RECONNECT all components. COMPLETE OBD II Drive Mode. RERUN OBD Test.
		No	No PCM root causes related to DTCs or symptoms. Go to next step.

STEP	INSPECTION		ACTION
6	CHECK CATALYST MONITOR OPERATION • Key off. • NGS tester connected. • Key on, engine on. • Select PID/DATA MONITOR AND RECORD and monitor O2S11 and O2S12 PIDs. • Drive the vehicle for approximately 10 min. at 64—96 km/h {40—60 mph}. • Allow vehicle to idle in Neutral or Park. • Maintain idle engine speed. • Record PID/DATA and count inversion times of O2S11 and O2S12. • Calculate devide O2S11 by O2S12. • **Is ratio of O2S11 and O2S12 greater than 2.0?**	Yes	REPLACE PCM. COMPLETE OBD II Drive Mode. ☞ After Repair Procedure RERUN OBD Test.
		No	REPEAT step. If ratio of O2S11 and O2S12 is below 2.0 after three attempts, go to next step.
7	CHECK FUEL PRESSURE **Note** • Fuel pressures above specification may produce abnormally rich air/fuel mixture. Rich air/fuel mixture may cause higher than normal catalyst operating temperatures. • Key off. • Inspection vacuum hose going to fuel pressure regulator for proper installation, cracks, etc. Service as necessary. • Install fuel pressure gauge. • Verify vacuum source to fuel pressure regulator. • Start and run engine at idle. Record fuel pressure. • Increase engine speed to 2,500 rpm and maintain for one minute. Record fuel pressure. • **Is fuel pressure between 210—310 kPa {2.2—3.1 kgf/cm^2, 31—46 psi}?**	Yes	Fuel pressure is okay. REMOVE fuel pressure gauge. Go to next step.
		No	Fuel pressure is out of specification. Inspect Fuel Delivery System. ☞ 01–14 FUEL INJECTOR INSPECTION [FS], Fuel Leakage Inspection RESET PCM to completely clear DTCs. ☞ After Repair Procedure COMPLETE OBD II Drive Mode. RERUN OBD Test.

8	CHECK FOR OBVIOUS LEAK SOURCES IN EXHAUST SYSTEM
	Note
	• Catalyst in series with leaking exhaust system, it can cause Catalyst Efficiency Monitor Test to fail.
	• Key off.
	• Inspect following for leaks, cracks, loose connections or punctures:
	  • Exhaust manifold
	  • Front exhaust pipe
	  • Rear exhaust pipe
	  • Silencer/tailpipe component
	• **Are above components free of cracks and punctures, etc.?**
		Yes	CHECK that exhaust manifold to catalyst inlet pipe joint is tight.
			Go to next step.

		No	REPLACE/SERVICE the leak source(s). RESET PCM to completely clear DTCs. ☞ After Repair Procedure COMPLETE OBD II Drive Mode. RERUN OBD Test.

9	CHECK FOR OBVIOUS RESTRICTIONS IN EXHAUST SYSTEM
	• Inspect following for dents, areas of collapsed material and unusual bending:
	  • Front exhaust pipe
	  • Rear exhaust pipe
	  • Silencer/tailpipe component
	• **Are above components free of dents and areas of collapsed material or unusual bending, etc.?**
		Yes	Go to next step.

		No	REPLACE/SERVICE restricted component(s) as necessary. RESET PCM to completely clear DTCs. ☞ After Repair Procedure COMPLETE OBD II Drive Mode. RERUN OBD Test.

STEP	INSPECTION		ACTION
10	CHECK MANIFOLD VACUUM FOR INDICATION OF EXCESSIVE EXHAUST SYSTEM RESTRICTION • Attach vacuum gauge to intake manifold vacuum source. • Install tachometer. • Observe vacuum gauge needle while performing following: **Note** • Vacuum gauge reading may be normal when engine is first started and idling. However, excessive restriction in exhaust system will cause vacuum. Gauge needle to drop to low point even while engine is idling. • Start engine and gradually increase rpm to 2,000 with transaxle in NEUTRAL • Decrease engine speed to base idle rpm. • Key off. • **Did manifold vacuum rise above 54 kPa {407 mmHg, 16 inHg} with engine rpm at 2,000?**	Yes	Go to next step.
		No	Manifold vacuum did not reach an acceptable level. Excessive restriction may be present. Go to step 12.
11	CHECK MANIFOLD VACUUM FOR INDICATION OF MODERATE EXHAUST SYSTEM RESTRICTION • Vacuum gauge installed. • Tachometer installed. • Key on, engine idling. • Increase engine speed gradually from base idle rpm to 2,000 rpm with transaxle in NEUTRAL. • Observe vacuum gauge needle rises while maintaining increased engine rpm. **Note** • On a non-restricted exhaust system, vacuum gauge needle will rise quickly to normal range as increased rpm is maintained. • On a restricted exhaust system, vacuum gauge needle will rise slowly to normal range as the increased rpm is maintained. **Note** • As increased rpm is maintained, rate of speed of vacuum gauge needle rising to normal range is slower on restricted system than on non-restricted system. • Decrease engine speed to base idle rpm. • Key off. • **Is the rate of speed that vacuum gauge needle rises back to normal range (above 54 kPa {407 mmHg, 16 inHg}) much slower than non-restricted system?**	Yes	Moderate restriction may be present. Go to next step.
		No	No indications of restrictions or leaks have been detected in exhaust system. If DTCs P0420 and P0421 are presenting catalytic converter is chemically inactive. REMOVE vacuum gauge and tachometer. REPLACE catalytic converter. RESET PCM to completely clear DTCs. ☞ After Repair Procedure COMPLETE OBD II Drive Mode. RERUN OBD Test. For further symptom diagnosis (e.g. Lack of power, Loss of Power, or No Start). ☞ 01–01A ENGINE SYMPTOM TROUBLESHOOTING [FS]

STEP	INSPECTION		ACTION
12	CHECK MANIFOLD VACUUM WITH EXHAUST MANIFOLD DISCONNECTED FOR INDICATION OF RESTRICTION • Key off. • Disconnect exhaust system immediately after catalytic converter. • Repeat vacuum measurement from step 10. • **Did vacuum needle quickly rise above 54 kPa {407 mmHg, 16 inHg} with engine rpm at 2,000?** **Note** • Intake manifold gasket leak can also cause vacuum gauge needle to remain well below normal range.	Yes	The exhaust system restriction is downstream of exhaust manifold. RECONNECT exhaust system at exhaust manifold. Go to next step.
		No	A restriction is present in exhaust manifold. REMOVE vacuum gauge and tachometer. INSPECT each exhaust port for casting flash/restrictions by dropping a length of chain into it. **Note** • Do not use wire or lamp to check ports. Restriction can be small enough for both to pass through but large enough to cause excessive back pressure at high engine rpm. REPLACE exhaust manifold if unable to remove casting flash/restriction. RESET PCM to completely clear DTCs. ☞ After Repair Procedure COMPLETE OBD II Drive Mode. RERUN OBD Test.
13	CHECK MANIFOLD VACUUM WITH SILENCER/TAILPIPE ASSEMBLY DISCONNECTED FOR INDICATION OF RESTRICTION • Key off. • Disconnect silencer/tailpipe component located after the catalytic converter. • Repeat vacuum measurement found in test step 10. • **Did vacuum needle quickly rise above 54 kPa {407 mmHg, 16 inHg} with engine rpm at 2,000?**	Yes	There is restriction in the silencer/tail pipe assembly. REPLACE silencer/tail pipe assembly. REMOVE vacuum gauge and tachometer. RESET PCM to completely clear DTCs. ☞ After Repair Procedure COMPLETE OBD II Drive Mode. RERUN OBD Test.
		No	There is restriction in three way catalytic converter. REMOVE vacuum gauge and tachometer. REPLACE catalytic converter. INSPECT silencer to be certain converter debris has not entered. RECONNECT silencer/tail pipe assembly. RESET PCM to completely clear DTCs. ☞ After Repair Procedure COMPLETE OBD II Drive Mode. RERUN OBD Test.

DTC P0442	Evaporative emission control system leak detected (Small leak)
DESCRIPTION	• DTC P0442 indicates leak has been detected [as small as 1 mm (0.040 inch)] in Evaporative Emission System.

[Possible Cause]

- Purge solenoid valve malfunction
- Canister Drain Cut Valve (CDCV) malfunction
- Loose fuel filler cup
- Charcoal canister malfunction
- Catch tank malfunction
- Pressure control valve malfunction
- Cracked fuel tank
- Fuel tank component parts poorly installed
- Evaporative hose damaged or loose
- Fuel tank level sensor malfunction
- Fuel tank pressure sensor malfunction
- Engine coolant temperature sensor malfunction
- Intake air temperature sensor malfunction
- Throttle position sensor malfunction
- Mass air flow sensor malfunction
- Vehicle speed sensor malfunction
- Poor connection of connector

Warning

Following troubleshooting flow chart contains fuel system diagnosis and repair procedures. Read following warnings before performing fuel system service:

- **Fuel vapor is hazardous. It can easily ignite, causing serious injury and damage. Always keep sparks and flames away from fuel.**
- **Fuel line spills and leaks are dangerous. Fuel can ignite and cause serious injuries or death and damage. Fuel can also irritate skin and eyes. To prevent this, always complete "BEFORE REPAIR PROCEDURE" and "AFTER REPAIR PROCEDURE" described in this manual.**
  - **☞ 01–14 BEFORE REPAIR PROCEDURE**
  - **☞ 01–14 AFTER REPAIR PROCEDURE**

STEP	INSPECTION		ACTION
1	CHECK FOR OTHER CONTINUOUS MEMORY DTC Check for other Continuous Memory DTCs which could cause Evaporative Emission Monitor DTC. • Key off. • NGS tester connected. • Key on, engine off. • Retrieve and record any Continuous Memory DTCs. • **Are there any other continuous Memory DTCs present?**	Yes	Go to appropriate DTC test. DISREGARD Evaporative Emission Monitor DTC at this time.
		No	Go to next step.
2	CHECK FOR KOEO SELF TEST • Activate key on, engine off (KOEO) self-test. • **Are any KOEO DTCs displayed?**	Yes	Go to appropriate DTC test.
		No	Go to next step.
3	CHECK FOR KOER SELF TEST • Key on, engine running. • Warm up engine to normal operating temperature. • Activate key on, engine running (KOER) self-test. • **Are any KOER DTCs displayed?**	Yes	Go to appropriate DTC test.
		No	Go to next step.
4	INSPECTION OF FUEL FILLER CAP • Key off. • Disconnect NGS tester. • Confirm filler cap is not either disconnected, loose or damaged. **Note** • When filler caps other than order entry system (OES) caps are attached, it is considered abnormal. • **Is fault detected?**	Yes	REPLACE or PROPERLY attach the filler cap. RESET PCM to completely clear DTCs. ☞ After Repair Procedure COMPLETE OBD II Drive Mode. RERUN OBD Test.
		No	Go to next step.

STEP	INSPECTION		ACTION
5	INSPECTION OF VACUUM HOSES • Pull slightly on vacuum hoses at purge solenoid, catch tank and charcoal canister. • Check for loose connections. • Visually inspect for improperly connected and cracked hoses between dynamic chamber and purge solenoid, purge solenoid and catch tank and catch tank and charcoal canister. • Confirm air-tightness of vacuum hose by using vacuum pump. • **Is fault detected?**	Yes	SERVICE or REPLACE as necessary. RECONNECT all components. RESET PCM to completely clear DTCs. ☞ After Repair Procedure COMPLETE OBD II Drive Mode. RERUN OBD Test.
		No	RECONNECT all components. Go to next step.
6	CHECK FOR PURGE SOLENOID VALVE STUCK CLOSED OR STUCK OPEN • Remove the purge solenoid valve. • Confirm the purge solenoid valve air vents properly when ON and is air tight when OFF. • **Is fault detected?**	Yes	REPLACE purge solenoid valve. RECONNECT all components. RESET PCM to completely clear DTCs. ☞ After Repair Procedure COMPLETE OBD II Drive Mode. RERUN OBD Test.
		No	RECONNECT all components. Go to next step.
7	INSPECTION OF CATCH TANK • Remove catch tank. • Visually inspect for cracked catch tank. • Inspect catch tank for plugging by using vacuum pump. • **Is fault detected?**	Yes	REPLACE catch tank. RECONNECT all components. RESET PCM to completely clear DTCs. ☞ After Repair Procedure COMPLETE OBD II Drive Mode. RERUN OBD Test.
		No	RECONNECT all components. Go to next step.
8	INSPECTION OF CHARCOAL CANISTER • Remove charcoal canister. • Visually inspect for cracked charcoal canister. • Inspect charcoal canister for plugging by using vacuum pump. • **Is fault detected?**	Yes	REPLACE charcoal canister. RECONNECT all components. RESET PCM to completely clear DTCs. ☞ After Repair Procedure COMPLETE OBD II Drive Mode. RERUN OBD Test.
		No	RECONNECT all components. Go to next step.
9	VERIFY FUEL TANK PRESSURE (FTP) SIGNAL VOLTAGE • Clamp on hose on tank side of charcoal canister. • Remove filler cap. • Connect NGS tester. • Key on, engine off. • Access FTP V PID. • **Is FTP V PID values same as atmospheric pressure (approx. 2.5 V)?**	Yes	Install the filler cap. Go to step 13.
		No	Install the filler cap. Go to next step.
10	INDUCE OPPOSITE FTP SIGNAL • Key off. • Disconnect FTP sensor. • Connect jumper wire between the sensor constant voltage circuit and FTP signal circuit at FTP sensor vehicle harness connector. • Key on, engine off. • If NGS tester communication concern exists, remove jumper immediately and go directly to next step. • Access FTP V PID. • **Is the FTP V PID value between 4.0 and 6.0 volts?**	Yes	REPLACE damaged FTP sensor. RECONNECT all components. RESET PCM to completely clear DTCs. ☞ After Repair Procedure COMPLETE OBD II Drive Mode. RERUN OBD Test.
		No	REMOVE jumper. Go to next step.

STEP	INSPECTION		ACTION
11	CHECK CONSTANT VOLTAGE AT FTP SENSOR VEHICLE HARNESS CONNECTOR • FTP sensor disconnected. • Key on, engine off. • Measure voltage between constant voltage circuit and FTP sensor ground circuit at FTP sensor vehicle harness connector. • **Is constant voltage between 4.0 and 6.0 volts?**	Yes	Go to next step.
		No	Constant voltage is out of range. SERVICE or REPLACE constant voltage circuit. RECONNECT all components. RESET PCM to completely clear DTCs. ☞ After Repair Procedure COMPLETE OBD II Drive Mode. RERUN OBD Test.
12	CHECK FTP SIGNAL CIRCUIT FOR SHORTS TO FTP SENSOR GROUND AND GROUND CIRCUIT • Key off. • FTP sensor disconnected. • Disconnect PCM. Inspect for damaged or pushed out pins, corrosion and loose wires. Service as necessary. • Install breakout box. • Disconnect NGS tester from DLC. • Measure resistance between Test Pin 62 and Test Pin 91 at breakout box. • Measure resistance between Test Pin 62 and Test Pins 51 and 103 at breakout box. • **Is each resistance greater than 10,000 ohms?**	Yes	FTP sensor is shorted to FTP sensor ground or ground in PCM. REPLACE PCM. REMOVE breakout box. RECONNECT all components. RESET PCM to completely clear DTCs. ☞ After Repair Procedure COMPLETE OBD II Drive Mode. RERUN OBD Test.
		No	SERVICE harness short between FTP sensor and ground. REMOVE breakout box. RECONNECT all components. RESET PCM to completely clear DTCs. ☞ After Repair Procedure COMPLETE OBD II Drive Mode. RERUN OBD Test.
13	CHECK FOR EVAPORATIVE EMISSION MONITOR SYSTEM • Key off. • Disconnect vacuum hose from charcoal canister at fuel tank side. • Attach the vacuum pump to vacuum hose. • Connect NGS tester. • Key on, engine off. • Access FTP V PID with NGS tester. • Apply 17 kPa {13 mmHg, 0.5 inHg} vacuum by using vacuum pump, then leave it for one minute. • **Did FTP V PID value maintain negative pressure?**	Yes	DISCONNECT NGS tester. Go to step 18.
		No	DISCONNECT NGS tester. Go to next step.
14	INSPECTION OF VACUUM HOSES • Key off. • Pull slightly on vacuum hoses at pressure control valve, FTP sensor, fuel filler pipe and fuel tank. • Check for loose connections. • Visually inspect for wrongly connected and cracked hoses between fuel tank and FTP sensor, fuel tank and pressure control valve, fuel filler pipe and pressure control valve and pressure control valve and charcoal canister. • Confirm air tightness of vacuum hose using vacuum pump. • **Is fault detected?**	Yes	SERVICE or REPLACE as necessary. RECONNECT all components. RESET PCM to completely clear DTCs. ☞ After Repair Procedure COMPLETE OBD II Drive Mode. RERUN OBD Test.
		No	RECONNECT all components. Go to next step.
15	CHECK FOR PRESSURE CONTROL VALVE • Remove and inspect pressure control valve. • **Is fault detected?**	Yes	REPLACE pressure control valve. RECONNECT all components. RESET PCM to completely clear DTCs. ☞ After Repair Procedure COMPLETE OBD II Drive Mode. RERUN OBD Test.
		No	RECONNECT all components. Go to next step.

STEP	INSPECTION		ACTION
16	INSPECTION FUEL FILLER PIPE • Remove fuel filler pipe. • Visually inspect fuel filler pipe for damage. • **Is fault detected?**	Yes	REPLACE the fuel filler pipe. RECONNECT all components. RESET PCM to completely clear DTCs. ☞ After Repair Procedure COMPLETE OBD II Drive Mode. RERUN OBD Test.
		No	RECONNECT all components. Go to next step.
17	INSPECTION OF FUEL TANK • Remove fuel tank and visually inspect for damage. • Visually inspect for insufficient sealing or poorly attached accessories on fuel tank. (i.e. fuel gauge.) • **Is fault detected?**	Yes	SERVICE or REPLACE fuel tank or sealing. RECONNECT all components. RESET PCM to completely clear DTCs. ☞ After Repair Procedure COMPLETE OBD II Drive Mode. RERUN OBD Test.
		No	RECONNECT all components. Go to next step.
18	CHECK FOR CANISTER DRAIN CUT VALVE (CDCV) • Key off. • Remove CDCV. • Confirm CDCV is not damaged, and that air vents is tight when at ON. • **Is fault detected?**	Yes	REPLACE CDCV. RECONNECT all components. RESET PCM to completely clear DTCs. ☞ After Repair Procedure COMPLETE OBD II Drive Mode. RERUN OBD Test.
		No	Inspect and repair any detached, incorrectly installed or cracked hoses between charcoal canister to CDCV. RECONNECT all components. RESET PCM to completely clear DTCs. ☞ After Repair Procedure COMPLETE OBD II Drive Mode. RERUN OBD Test.

DTC P0443	Evaporative emission control system purge solenoid valve circuit malfunction
DESCRIPTION	• DTC P0443 indicates failure in purge solenoid valve circuit

[Possible Cause]
- Power circuit open
- Purge solenoid valve signal open in harness
- Purge solenoid valve signal circuit short to power ground
- Damaged purge solenoid valve
- Damaged PCM

STEP	INSPECTION		ACTION
1	CHECK PURGE SOLENOID VALVE POWER CIRCUIT **Note** • If DTC P0443 was generated in continuous memory only, go to step 5. • Key off. • Disconnect purge solenoid valve. • Key on, engine off. • Measure voltage between power circuit at purge solenoid valve vehicle harness connector and battery ground. • **Is voltage greater than 10.5 volts?**	Yes	Go to next step.
		No	SERVICE open in power circuit harness circuit. RECONNECT all components. VERIFY symptom no longer exists. RESET PCM to completely clear DTCs. ☞ After Repair Procedure COMPLETE OBD II Drive Mode. RERUN OBD Test.
2	CHECK PURGE SOLENOID VALVE RESISTANCE • Key off. • Purge solenoid valve disconnected. • Measure resistance between purge solenoid valve signal and power circuit at purge solenoid valve. • **Is resistance between 27 and 35 ohms?**	Yes	Go to next step.
		No	REPLACE purge solenoid valve. VERIFY the symptom no longer exists. RESET PCM to completely clear DTCs. ☞ After Repair Procedure COMPLETE OBD II Drive Mode. RERUN OBD Test.
3	CHECK CONTINUITY OF PURGE SOLENOID VALVE SIGNAL CIRCUIT • Key off. • Purge solenoid valve disconnected. • Disconnect PCM. Inspect for damaged or pushed out pins, corrosion, loose wires, etc. Service as necessary. • Install breakout box. Leave PCM disconnected. • Measure resistance between Test Pin 67 at breakout box and purge solenoid valve signal circuit at solenoid vehicle harness connector. • **Is the resistance less than 5.0 ohms?**	Yes	Go to next step.
		No	SERVICE open in harness circuit. REMOVE breakout box. RECONNECT all components. VERIFY symptom no longer exists. RESET PCM to completely clear DTCs. ☞ After Repair Procedure COMPLETE OBD II Drive Mode. RERUN OBD Test.
4	CHECK PURGE SOLENOID VALVE SIGNAL CIRCUIT FOR SHORT GROUND CIRCUIT • Key off. • Purge solenoid valve disconnected. • Breakout box installed. • Disconnect NGS tester from DLC. • Measure the resistance between Test Pin 67 and Test Pins 24 and 103 at breakout box. • **Is each resistance greater than 10,000 ohms?**	Yes	Go to next step.
		No	SERVICE harness short circuit. REMOVE breakout box. RECONNECT all components. VERIFY symptom no longer exists. RESET PCM to completely clear DTCs. ☞ After Repair Procedure COMPLETE OBD II Drive Mode. RERUN OBD Test.
5	COMPLETED KOEO AND KOER SELF-TEST • **Was DTC P0443 generated in either KOEO or KOER self-test?**	Yes	RETURN to step 1 and address the cause of the DTC.
		No	Go to next step.

STEP	INSPECTION		ACTION

6	CHECK FOR INTERMITTENT FAULT IN HARNESS AND CONNECTOR
	• Key off.
	• Disconnect PCM. Inspect for damaged or pushed out pins, corrosion, loose wires, etc.
	• Install breakout box.
	• Connect DVOM to Test Pin 67 and Test Pin 71 at breakout box.
	• Key on, engine off.
	• Observe DVOM display for an indication of a fault (changing voltage) while performing the following:
	  • Lightly tap on purge solenoid valve.
	  • Wiggle purge solenoid valve connector.
	  • Grasp the purge solenoid valve vehicle harness connector and wiggle wires between the solenoid and PCM.
	• **Is fault detected?**
		Yes	ISOLATE fault and SERVICE as necessary.
			REMOVE breakout box.
			RECONNECT all components.
			RERUN OBD Test.

		No	Unable to duplicate and/or identify fault at this time. Intermittent poor connection or component malfunction (Repair as necessary.). Go to ENGINE SYMPTOM TROUBLESHOOTING No.27.

DTC P0446	Evaporative emission control system vent control malfunction
DESCRIPTION	• DTC P0446 indicates an excessive fuel tank pressure (FTP) or vent control malfunction in Evaporative Emission Control System

[Possible Cause]
- Damaged FTP sensor
- Kinks or blockage in fuel vapor hose/tube
- Constant voltage circuit to FTP sensor open
- Fuel vapor storage canister vent restriction
- Damaged Canister Vent side filter
- Damaged Canister Drain Cut Valve (CDCV)
- Damaged PCM

Warning
Following troubleshooting flow chart contains fuel system diagnosis and repair procedures. Read following warnings before performing fuel system service:
- **Fuel vapor is hazardous. It can easily ignite, causing serious injury and damage. Always keep sparks and flames away from fuel.**
- **Fuel line spills and leaks are dangerous. Fuel can ignite and cause serious injuries or death and damage. Fuel can also irritate skin and eyes. To prevent this, always complete "BEFORE REPAIR PROCEDURE" and "AFTER REPAIR PROCEDURE" described in this manual.**
  ☞ 01–14 BEFORE REPAIR PROCEDURE
  ☞ 01–14 AFTER REPAIR PROCEDURE

STEP	INSPECTION		ACTION
1	CHECK FTP SENSOR • Key on, engine off. **Note** • The FTP V PID should read between 2.50 and 2.70 volts. Start engine if FTP V PID is equal to or less than 0.33 volt.	Yes	INSTALL fuel filler cap only 1/8 turn so that cap initially clicks by sound or touch. Go to step 3.
	• Access FTP V PID. • Key on, engine running. • Idle engine for 3 minutes. • Loosen fuel filler cap. • Again, access FTP V PID with NGS tester. • **Is FTP V PID voltage between 2.40 and 2.80 volts?**	No	INSTALL fuel filler cap only 1/8 turn so cap initially clicks by sound or touch. Go to next step.

STEP	INSPECTION		ACTION
2	CHECK CONSTANT VOLTAGE AT FTP SENSOR VEHICLE HARNESS CONNECTOR • Key off. • Disconnect FTP sensor vehicle harness connector. • Key on, engine off. • Measure voltage between the constant voltage circuit and FTP sensor ground circuit at the FTP sensor harness connector. • **Is constant voltage between 4.0 and 6.0 volts?**	Yes	Constant voltage is open in FTP sensor. REPLACE FTP sensor. REMOVE breakout box. RECONNECT all components. RESET PCM to completely clear DTCs. ☞ After Repair Procedure COMPLETE OBD II Drive Mode. RERUN OBD Test.
		No	Constant voltage is out of range. SERVICE open or short in constant voltage circuit.
3	CHECK FOR RESTRICTION AT CHARCOAL CANISTER AND CDCV • Check for kinks or bends in fuel vapor hoses from fuel tank to the in-line tee and from tee to both purge solenoid valve and charcoal canister. • Disconnect both ends of fuel vapor hose between charcoal canister and pressure control valve. • Check for vacuum bleed on disconnected fuel vapor hose with vacuum pump. Fuel vapor hose must not hold vacuum. • Check for excessive debris in charcoal canister or restrictions at charcoal canister atmosphere venting port to canister drain cut valve (CDCV) (most applications have CDCV directly attached to charcoal canister). • Check for kinks or bends in purge air inlet tube (larger diameter hose) between CDCV and atmosphere. • **Is obstruction indicated?**	Yes	SERVICE as necessary. RECONNECT all components. RESET PCM to completely clear DTCs. ☞ After Repair Procedure COMPLETE OBD II Drive Mode. RERUN OBD Test.
		No	Go to next step.
4	CHECK HOSE FROM CANISTER DRAIN CUT VALVE (CDCV) FILTER PORT TO ATMOSPHERE • Disconnect vacuum hose to atmosphere at CDCV. • Install hand-held vacuum pump to CDCV side of vacuum hose. • Apply vacuum to vacuum hose. • **Does air flow?**	Yes	RECONNECT all components. Go to step 7.
		No	Go to next step.
5	INSPECTION OF CHECK VALVE • Remove and inspect check valve for plugging. • **Is fault detected?**	Yes	REPLACE check valve. RECONNECT all components. RESET PCM completely clear DTCs. ☞ After Repair Procedure COMPLETE OBD II Drive Mode. RERUN OBD Test.
		No	Go to next step.
6	INSPECTION OF AIR FILTER • Remove and inspect air filter for plugging. • **Is fault detected?**	Yes	REPLACE air filter. RECONNECT all components. RESET PCM completely clear DTCs. ☞ After Repair Procedure COMPLETE OBD II Drive Mode. RERUN OBD Test.
		No	REPLACE vacuum hose. RECONNECT all components. RESET PCM completely clear DTCs. ☞ After Repair Procedure COMPLETE OBD II Drive Mode. RERUN OBD Test.

STEP	INSPECTION		ACTION
7	CHECK CDCV MECHANICAL OPERATION OPEN VACUUM POSITION • Key off. • Disconnect vacuum hose at both ends of CDCV. • If CDCV is directly attached to charcoal canister, disconnect fuel vapor hose from purge solenoid valve to charcoal canister at charcoal canister. • Install hand-held vacuum pump vent to atmosphere side of CDCV. • CDCV electrically connected. • Apply 53 kPa {0.53 kgf/cm^2, 16 inHg} of vacuum to CDCV. • **Does CDCV hold vacuum for one minute?**	Yes	REMOVE vacuum pump. REPLACE CDCV. RECONNECT all components. RESET PCM completely clear DTCs. ☞ After Repair Procedure COMPLETE OBD II Drive Mode. RERUN OBD Test.
		No	RECONNECT all components. Go to next step.
8	CHECK CDCV RESISTANCE • Key off. • Disconnect CDCV harness connector. • Measure the resistance between CDCV terminals. • **Is each resistance less than 45 ohms?**	Yes	CDCV circuit is shorted to ground in CDCV. REPLACE CDCV. RECONNECT all components. RESET PCM completely clear DTCs. ☞ After Repair Procedure COMPLETE OBD II Drive Mode. RERUN OBD Test.
		No	Go to next step.
9	CHECK CDCV CIRCUIT FOR SHORT TO GROUND CIRCUIT • Key off. • CDCV disconnected. • Disconnect PCM. Inspect for damaged or pushed out pins, corrosion and loose wires. Service as necessary. • Install breakout box. Leave PCM disconnected. • Disconnect NGS tester from DLC. • Measure resistance between Test Pin 67 and Test Pins 51 and 103 at breakout box. • **Is each resistance greater than 10,000 ohms?**	Yes	Go to next step.
		No	SERVICE harness short between CDCV and ground. REMOVE breakout box. RECONNECT all components. RESET PCM completely clear DTCs. ☞ After Repair Procedure COMPLETE OBD II Drive Mode. RERUN OBD Test.
10	INSPECTION OF FUEL TANK • Remove and inspect fuel tank. • **Is fault detected?**	Yes	SERVICE or REPLACE fuel tank or sealing. RECONNECT all components. RESET PCM completely clear DTCs. ☞ After Repair Procedure COMPLETE OBD II Drive Mode. RERUN OBD Test.
		No	UNABLE to duplicate or identify fault. Go to ENGINE SYMPTOM TROUBLESHOOTING No.30.

DTC P0452	Evaporative emission control system fuel tank pressure sensor circuit low input
DESCRIPTION	• Diagnostic trouble code P0452 indicates that Fuel Tank Pressure (FTP) sensor input signal is below minimum.

[Possible Cause]
- FTP sensor completely submerged in liquid fuel
- Inside contamination of FTP sensor connector
- Ground circuit short circuit
- FTP sensor ground short circuit
- Damaged FTP sensor
- Damaged PCM

STEP	INSPECTION		ACTION
1	CHECK FOR FUEL SATURATION OF FTP SENSOR • Key off. • Visually check for liquid fuel contamination of FTP sensor connector. • Check for completely submerged FTP sensor in liquid fuel (can affect FTP voltage reading). • **Does FTP sensor and/or connector show signs of fuel contamination?**	Yes	SERVICE FTP sensor connector as necessary. If FTP sensor is completely submerged in fuel, DRAIN fuel tank and REFILL to proper fuel level. RESET PCM to completely clear DTCs. ☞ After Repair Procedure COMPLETE OBD II Drive Mode. RERUN OBD Test.
		No	INSTALL original FTP sensor in fuel tank. Go to step 6 and the RETURN to the Pinpoint Test Step that directed you here. Go to next step.
2	VERIFY FTP SIGNAL VOLTAGE • Key on, engine off. **Note** • FTP sensor input with no pressure/vacuum on fuel tank (filler cap open or not open to atmosphere) is 2.37—2.87 volts. Access FTP V PID with NGS tester. • **Is FTP V PID voltage less than 0.22 volt?**	Yes	FTP sensor voltage less than acceptable minimum. Go to next step.
		No	The fault that produced the DTC P0452 is intermittent. Perform the Wiggle/Tap test.
3	INDUCE OPPOSITE FTP SIGNAL • Key off. • Disconnect FTP sensor vehicle harness connector. • Connect jumper wire between the sensor constant voltage circuit and the FTP signal circuit at the FTP sensor vehicle harness connector. • Key on, engine off. • If NGS tester communication concern exists, remove jumper immediately and go directly to next step. • Access FTP V PID with NGS tester. • **Is the FTP V PID value between 4.0 and 6.0 volts?**	Yes	REPLACE damaged FTP sensor. ☞ 01–16 EMISSION SYSTEM (FUEL TANK SIDE) COMPONENT RECONNECT all components. RECORD and REMEMBER this Pinpoint Test Step go to step 6. then RETURN to the Pinpoint Test Step that directed you here. RESET PCM to completely clear DTCs. ☞ After Repair Procedure COMPLETE OBD II Drive Mode. RERUN OBD Test.
		No	REMOVE jumper wire. Go to next step.
4	CHECK CONSTANT VOLTAGE AT FTP SENSOR VEHICLE HARNESS CONNECTOR • FTP sensor disconnected. • Key on, engine off. • Measure voltage between constant voltage circuit and FTP sensor ground circuit at FTP sensor vehicle harness connector. • **Is constant voltage between 4.0 and 6.0 volts?**	Yes	Go to next step.
		No	Constant voltage is out of range.

STEP	INSPECTION		ACTION
5	CHECK FTP SIGNAL CIRCUIT FOR SHORTS TO FTP SENSOR GROUND AND GROUND CIRCUIT • Key off. • FTP sensor disconnected. • Disconnect PCM. Inspect for damaged or pushed out pins, corrosion and loose wires. Service as necessary. • Install breakout box. Leave PCM disconnected. • Disconnect NGS tester from DLC. • Measure the resistance between Test Pin 62 and Test Pin 91 at breakout box. • Measure resistance between Test Pin 62 and Test Pins 51 and 103 at breakout box. • **Is each resistance greater than 10,000 ohms?**	Yes	FTP signal circuit is shorted to FTP sensor ground or ground circuit in PCM. REPLACE PCM. REMOVE breakout box. RECONNECT all components. RERUN OBD Test.
		No	SERVICE harness short between FTP signal circuit and FTP sensor ground or ground circuit. REMOVE breakout box. RECONNECT all components. RESET PCM to completely clear DTCs. ☞ After Repair Procedure COMPLETE OBD II Drive Mode. RERUN OBD Test.
6	EVAPORATIVE SYSTEM RE-CHECK • RESET PCM to completely clear DTCs. ☞ After Repair Procedure • COMPLETE OBD II Drive Mode. • **Is MIL illuminated?**	Yes	ISOLATE pressure leak in evaporative emission system (vacuum/fuel vapor hose connections, cracked/split hoses, damaged components. SERVICE as necessary. VERIFY symptom no longer exists. RESET PCM to completely clear DTCs. ☞ After Repair Procedure COMPLETE OBD II Drive Mode. RERUN OBD Test.
		No	If detected here from previous step, return to that step and continue step. RETURN to the Action to Take column of the Pinpoint Test Step that directed you here.

DTC P0453	Evaporative emission control system fuel tank pressure sensor circuit high input
DESCRIPTION	• DTC P0453 indicates Fuel Tank Pressure (FTP) signal circuit input above the maximum.

[Possible Cause]
- FTP signal circuit open
- FTP signal circuit shorted to constant voltage circuit or power circuit
- Constant voltage shorted to power circuit
- FTP sensor ground open
- Damaged FTP sensor
- Damaged PCM

STEP	INSPECTION		ACTION
1	VERIFY FTP SIGNAL CIRCUIT VOLTAGE • Key on, engine off. **Note** • FTP sensor input with no pressure/vacuum on fuel tank (fuel filler cap open or not open to atmosphere) is 2.37—2.87 volts. • Access FTP V PID with NGS tester. • **Is FTP V PID voltage greater than 4.50 volts?**	Yes	FTP signal circuit voltage is greater than acceptable maximum. Go to next step.
		No	The fault that produced DTC P0453 is intermittent. Perform the Wiggle/Tap test.
2	CHECK FTP AT FTP SENSOR FOR SHORT TO POWER CIRCUIT • Key off. • Disconnect FTP sensor vehicle harness connector. • Key on, engine off. • Measure voltage between FTP signal circuit at FTP sensor vehicle harness connector and battery ground. • **Is voltage greater than 10.5 volts?**	Yes	The FTP is indicating short to power circuit. Go to next step.
		No	Go to step 4.
3	CHECK FTP SIGNAL CIRCUIT FOR SHORT TO POWER CIRCUIT • Key off. • FTP sensor disconnected. • Disconnect PCM. Inspect for damaged or pushed out pins, corrosion and loose wires. Service as necessary. • Install breakout box. Leave PCM disconnected. • Key on, engine off. • Measure voltage between Test Pin 62 and Test Pins 51 and 103 at breakout box. • **Is voltage greater than 10.5 volts?**	Yes	SERVICE harness short between FTP and power circuit. REMOVE breakout box. RECONNECT all components. RESET PCM to completely clear DTCs. ☞ After Repair Procedure COMPLETE OBD II Drive Mode. RERUN OBD Test.
		No	FTP is shorted to power circuit in PCM. REPLACE damaged PCM. REMOVE breakout box. RECONNECT all components. RERUN OBD Test.
4	INDUCE OPPOSITE SIGNAL • Key off. • FTP sensor disconnected. • Connect jumper wire between sensor FTP sensor ground circuit and FTP circuit at FTP sensor harness connector. • Key on, engine off. • If NGS tester communication concern exists, remove jumper immediately and check FTP signal short to constant voltage in PCM or harness. • Access FTP V PID with NGS tester. • **Is FTP V PID voltage less than 0.10 volt?**	Yes	REMOVE jumper wire. Go to next step.
		No	Unable to induce opposite signal.
5	VERIFY THAT CONSTANT VOLTAGE IS IN RANGE • FTP sensor disconnected. • Key on, engine off. • Measure voltage between constant voltage circuit and FTP sensor ground circuit at FTP sensor vehicle harness connector. • **Is constant voltage between 4.0 and 6.0 volts?**	Yes	Go to next step.
		No	Constant voltage is out of range.

STEP	INSPECTION		ACTION
6	CHECK FTP SIGNAL CIRCUIT FOR SHORT TO CONSTANT VOLTAGE CIRCUIT IN SENSOR OR HARNESS • Key off. • FTP sensor disconnected. • Disconnected PCM. Inspect for damaged or pushed out pins, corrosion and loose wires. Service as necessary. • Install breakout box. Leave PCM disconnected. • Measure resistance between Test Pin 62 and Test Pin 90 at breakout box. • **Is resistance greater that 10,000 ohms?**	Yes	FTP sensor ground in FTP sensor or FTP sensor or FTP is shorted to constant voltage circuit in FTP sensor. REPLACE damaged FTP sensor. REMOVE breakout box. RECONNECT all components. RECORD and REMEMBER this Pinpoint Test Step Go to next step then RETURN to the Pinpoint Test Step that directed you here. RESET PCM to completely clear DTCs. ☞ After Repair Procedure COMPLETE OBD II Drive Mode. RERUN OBD Test.
		No	SERVICE harness short between FTP signal and constant voltage. REMOVE breakout box. RECONNECT all components. RESET PCM to completely clear DTCs. ☞ After Repair Procedure COMPLETE OBD II Drive Mode. RERUN OBD Test.
7	EVAPORATIVE SYSTEM RE-CHECK • RESET PCM to completely clear DTCs. ☞ After Repair Procedure • COMPLETE OBD II Drive Mode. • **Is MIL illuminated?**	Yes	ISOLATE pressure leak in evaporative emission system (vacuum/fuel vapor hose connections, cracked/split hoses, damaged components). SERVICE as necessary. VERIFY symptom no longer exists. RESET PCM to completely clear DTCs. ☞ After Repair Procedure COMPLETE OBD II Drive Mode. RERUN OBD Test.
		No	RETURN to Action column of the Pinpoint Test Step that directed you here.

DTC P0455	Evaporative emission control system leak detected (Gross leak)
DESCRIPTION	• DTC P0455 indicates substantial leak or blockage has been detected in Evaporative Emission System.

[Possible Cause]

- Purge solenoid valve malfunction
- CDCV malfunction
- Loose fuel filler cap
- Charcoal canister malfunction
- Catch tank malfunction
- Pressure control valve malfunction
- Cracked fuel tank
- Fuel tank component parts poorly installed
- Evaporative hose damaged or loose
- Insufficient manifold absolute pressure
- Fuel tank level sensor malfunction
- Fuel tank pressure sensor malfunction
- Engine coolant temperature sensor malfunction
- Intake air temperature sensor malfunction
- Throttle position sensor malfunction
- Mass air flow sensor malfunction
- Vehicle speed sensor malfunction
- Poor connection of connector

Warning

Following troubleshooting flow chart contains fuel system diagnosis and repair procedures. Read following warnings before performing fuel system service:

- **Fuel vapor is hazardous. It can easily ignite, causing serious injury and damage. Always keep sparks and flames away from fuel.**
- **Fuel line spills and leaks are dangerous. Fuel can ignite and cause serious injuries or death and damage. Fuel can also irritate skin and eyes. To prevent this, always complete "BEFORE REPAIR PROCEDURE" and "AFTER REPAIR PROCEDURE" described in this manual.**
  - **☞ 01–14 BEFORE REPAIR PROCEDURE**
  - **☞ 01–14 AFTER REPAIR PROCEDURE**

STEP	INSPECTION		ACTION
1	CHECK FOR OTHER CONTINUOUS MEMORY DTC Check for other Continuous Memory DTCs which could cause this DTC. • Key off. • NGS tester connected. • Key on, engine off. • Retrieve and record any Continuous Memory DTCs. • **Are there any other continuous Memory DTCs present?**	Yes	DISREGARD Evaporative Emission Monitor DTC at this time. Go to appropriate DTC test.
		No	Go to next step.
2	CHECK FOR KOEO SELF-TEST • Activate key on, engine off (KOEO) self-test. • **Are any Key On Engine Off DTCs displayed?**	Yes	Go to DTC charts and PROCEED as required.
		No	Go to next step.
3	CHECK FOR KOER SELF-TEST • Key on, engine running. • Warm up engine to normal operating temperature. • Activate key on, engine running (KOER) self-test. • **Are any key On Engine Running DTCs displayed?**	Yes	Go to DTC charts and PROCEED as required.
		No	Go to next step.
4	CHECK FOR INTAKE MANIFOLD VACUUM • Key off. • Attach vacuum gauge to intake manifold vacuum source beside purge control system. • Key on, engine running. • Warm up engine to normal operating temperature. • Measure intake manifold vacuum. • **Did manifold vacuum rise above 54 kPa {407 mmHg, 16 inHg}.**	Yes	DISCONNECT vacuum gauge. RECONNECT all components. Go to next step.
		No	INSPECT and SERVICE troubles on air intake and engine. RECONNECT all components. RESET PCM to completely clear DTCs. ☞ After Repair Procedure COMPLETE OBD II Drive Mode. RERUN OBD Test.

STEP	INSPECTION		ACTION
5	INSPECTION OF FUEL FILLER CAP • Key off. • Disconnect NGS tester. • Confirm the filler cap is not either disconnected, loose or damaged. **Note** • It is considered abnormal when filler caps other than order entry system (OES) caps are attached. • **Is fault detected?**	Yes	REPLACE or PROPERLY attach filler cap. RESET PCM to completely clear DTCs. ☞ After Repair Procedure COMPLETE OBD II Drive Mode. RERUN OBD Test.
		No	Go to next step.
6	INSPECTION OF VACUUM HOSES • Pull slightly on vacuum hoses at purge solenoid, catch tank and charcoal canister. • Check for loose connections. • Visually inspect for improperly connection and cracked hoses between dynamic chamber and purge solenoid, purge solenoid and catch tank and catch tank and charcoal canister. • Confirm air tightness of vacuum hose by using vacuum pump. • **Is fault detected?**	Yes	SERVICE or REPLACE as necessary. RECONNECT all components. RESET PCM to completely clear DTCs. ☞ After Repair Procedure COMPLETE OBD II Drive Mode. RERUN OBD Test.
		No	RECONNECT all components. Go to next step.
7	CHECK FOR PURGE SOLENOID VALVE – VALVE STUCK CLOSED OR STUCK OPEN • Remove purge solenoid valve. • Confirm purge solenoid vents air properly when ON and is air tight when OFF. • **Is fault detected?**	Yes	REPLACE purge solenoid valve. RECONNECT all components. RESET PCM to completely clear DTCs. COMPLETE OBD II Drive Mode. ☞ After Repair Procedure RERUN OBD Test.
		No	RECONNECT all components. Go to next step.
8	INSPECTION OF CATCH TANK • Remove catch tank. • Visually inspect for cracked catch tank. • Inspect catch tank for plugging by using vacuum pump. • **Is fault detected?**	Yes	REPLACE catch tank. RECONNECT all components. RESET PCM to completely clear DTCs. ☞ After Repair Procedure COMPLETE OBD II Drive Mode. RERUN OBD Test.
		No	RECONNECT all components. Go to next step.
9	CHECK FOR INTAKE MANIFOLD VACUUM TO PURGE CONTROL SYSTEM • Key off. • Attach vacuum gauge to intake manifold vacuum source for purge control system. • Key on, engine running. • Warm up engine to normal operating temperature. • Measure intake manifold vacuum. • **Did manifold vacuum rise above 54 kPa {407 mmHg, 16 inHg}.**	Yes	DISCONNECT vacuum gauge. RECONNECT all components. Go to next step.
		No	INSPECT and SERVICE plugging, cracking, or damages on the dynamic chamber vacuum passage. RECONNECT all components. RESET PCM to completely clear DTCs. ☞ After Repair Procedure COMPLETE OBD II Drive Mode. RERUN OBD Test.
10	INSPECTION OF CHARCOAL CANISTER • Remove charcoal canister. • Visually inspect for cracked charcoal canister. • Inspect charcoal canister for plugging by using vacuum pump. • **Is fault detected?**	Yes	REPLACE charcoal canister. RECONNECT all components. RESET PCM to completely clear DTCs. ☞ After Repair Procedure COMPLETE OBD II Drive Mode. RERUN OBD Test.
		No	RECONNECT all components. Go to next step.

STEP	INSPECTION		ACTION
11	VERIFY FTP SIGNAL VOLTAGE • Clamp on hose on tank side of the charcoal canister. • Remove filler cap. • Connect NGS tester. • Key on, engine off. • Access FTP V PID with NGS tester. • **Are FTP V PID values same as atmospheric pressure (approx. 2.5 V)?**	Yes	Install filler cap. Go to step 15.
		No	Install filler cap. Go to next step.
12	INDUCE OPPOSITE FTP SIGNAL • Key off. • Disconnect FTP sensor vehicle harness connector. • Connect jumper wire at constant voltage circuit between FTP sensor and sensor vehicle harness connector. • Key on, engine off. • If NGS tester communication concern exists, remove jumper immediately and go directly to next step. • Access FTP V PID. • **Is FTP V PID value between 4.0 and 6.0 volts?**	Yes	REPLACE damaged FTP sensor. RECONNECT all components. RESET PCM to completely clear DTCs. ☞ After Repair Procedure COMPLETE OBD II Drive Mode. RERUN OBD Test.
		No	REMOVE jumper. Go to next step.
13	CHECK VREF AT FTP SENSOR VEHICLE HARNESS CONNECTOR • FTP sensor disconnected. • Key on, engine off. • Measure voltage between constant voltage circuit and FTP sensor ground circuit at FTP sensor vehicle harness connector. • **Is constant voltage between 4.0 and 6.0 volts?**	Yes	Go to next step.
		No	Constant voltage is out of range. SERVICE or REPLACE constant voltage circuit. RECONNECT all components. RESET PCM to completely clear DTCs. ☞ After Repair Procedure COMPLETE OBD II Drive Mode. RERUN OBD Test.
14	CHECK FTP SIGNAL CIRCUIT FOR SHORTS TO FTP SENSOR GROUND AND GROUND CIRCUIT • Key off. • Disconnect FTP sensor. • Disconnect PCM. Inspect for damaged or pushed out pins, corrosion and loose wires. Service as necessary. • Install breakout box. Leave PCM disconnected. • Disconnect NGS tester from DLC. • Measure resistance between Test Pin 62 and Test Pin 91 at breakout box. • Measure resistance between Test Pin 62 and Test Pins 51 and 103 at breakout box. • **Is each resistance greater than 10,000 ohms?**	Yes	FTP is shorted to FTP sensor ground or ground circuit in PCM. REPLACE PCM. REMOVE breakout box. RECONNECT all components. RESET PCM to completely clear DTCs. ☞ After Repair Procedure COMPLETE OBD II Drive Mode. RERUN OBD Test.
		No	SERVICE harness short between FTP signal and FTP sensor ground or ground circuit. REMOVE breakout box. RECONNECT all components. RESET PCM to completely clear DTCs. ☞ After Repair Procedure COMPLETE OBD II Drive Mode. RERUN OBD Test.
15	CHECK FOR EVAPORATIVE EMISSION MONITOR SYSTEM • Key off. • Disconnect vacuum hose from charcoal canister at fuel tank side. • Attach vacuum pump to vacuum hose. • Connect NGS tester. • Key on, engine off. • Access FTP V PID. • Apply vacuum by using vacuum pump. • **Does FTP V PID value change on negative pressure side?** ☞ 01–40A FUEL TANK PRESSURE SENSOR INSPECTION [FS]	Yes	DISCONNECT NGS tester. Go to step 20.
		No	DISCONNECT NGS tester. Go to next step.

STEP	INSPECTION		ACTION
16	INSPECTION OF VACUUM HOSES • Key off. • Pull slightly on vacuum hoses at pressure control valve, FTP sensor, fuel filler pipe and fuel tank. • Check for loose connections. • Visually inspect for improperly connections and cracked hoses between fuel tank and FTP sensor, fuel tank and pressure control valve, fuel filler pipe and pressure control valve and pressure control valve and charcoal canister. • Confirm air tightness of vacuum hose using vacuum pump. • **Is fault detected?**	Yes	SERVICE or REPLACE as necessary. RECONNECT all components. RESET PCM to completely clear DTCs. ☞ After Repair Procedure COMPLETE OBD II Drive Mode. RERUN OBD Test.
		No	RECONNECT all components. Go to next step.
17	CHECK FOR PRESSURE CONTROL VALVE • Remove and inspect pressure control valve. • **Is fault detected?**	Yes	REPLACE pressure control valve. RECONNECT all components. RESET PCM to completely clear DTCs. ☞ After Repair Procedure COMPLETE OBD II Drive Mode. RERUN OBD Test.
		No	RECONNECT all components. Go to next step.
18	INSPECTION FUEL FILLER PIPE • Remove fuel filler pipe. • Visually inspect for fuel filler pipe damage. • **Is fault detected?**	Yes	REPLACE fuel filler pipe. RECONNECT all components. RESET PCM to completely clear DTCs. ☞ After Repair Procedure COMPLETE OBD II Drive Mode. RERUN OBD Test.
		No	RECONNECT all components. Go to next step.
19	INSPECTION OF FUEL TANK • Remove fuel tank. • Visually inspect for fuel tank damage. • Visually inspect for insufficient sealing or poorly attached accessories on fuel tank: i.e., fuel gauge. • **Is fault detected?**	Yes	SERVICE or REPLACE fuel tank or sealing. RECONNECT all components. RESET PCM to completely clear DTCs. ☞ After Repair Procedure COMPLETE OBD II Drive Mode. RERUN OBD Test.
		No	RECONNECT all components. Go to next step.
20	CHECK FOR EVAPORATIVE EMISSION MONITOR SYSTEM • Key off. • Disconnect vacuum hose from charcoal canister at fuel tank side. • Attach the vacuum pump to vacuum hose. • Connect NGS tester. • Key on, engine off. • Access FTP V PID. • Apply 17 kPa {13 mmHg, 0.5 inHg} vacuum by using vacuum pump, then leave it for one minute. • **Does FTP V PID value maintained negative pressure?**	Yes	DISCONNECT NGS tester. Go to step 25.
		No	DISCONNECT NGS tester. Go to next step.

STEP	INSPECTION		ACTION
21	INSPECTION OF VACUUM HOSES • Key off. • Pull slightly on vacuum hoses at pressure control valve, FTP sensor, fuel filler pipe and fuel tank. • Check for loose connections. • Visually inspect for improper connections and cracked hoses between fuel tank and FTP sensor, fuel tank and pressure control valve, fuel filler pipe and pressure control valve and pressure control valve and charcoal canister. • Confirm the air tightness of vacuum hose using vacuum pump. • **Is fault detected?**	Yes	SERVICE or REPLACE as necessary. RECONNECT all components. RESET PCM to completely clear DTCs. ☞ After Repair Procedure COMPLETE OBD II Drive Mode. RERUN OBD Test.
		No	RECONNECT all components. Go to next step.
22	CHECK FOR PRESSURE CONTROL VALVE • Remove and inspect pressure control valve. • **Is fault detected?**	Yes	REPLACE pressure control valve. RECONNECT all components. RESET PCM to completely clear DTCs. ☞ After Repair Procedure COMPLETE OBD II Drive Mode. RERUN OBD Test.
		No	RECONNECT all components. Go to next step.
23	INSPECTION FUEL FILLER PIPE • Remove fuel filler pipe. • Visually inspect for fuel filler pipe damage. • **Is fault detected?**	Yes	REPLACE fuel filler pipe. RECONNECT all components. RESET PCM to completely clear DTCs. ☞ After Repair Procedure COMPLETE OBD II Drive Mode. RERUN OBD Test.
		No	RECONNECT all components. Go to next step.
24	INSPECTION OF FUEL TANK • Remove fuel tank. • Visually inspect for fuel tank damage. • Visually inspect for insufficient sealing or poorly attached accessories on fuel tank: i.e., fuel gauge. • **Is fault detected?**	Yes	SERVICE or REPLACE fuel tank or sealing. RECONNECT all components. RESET PCM to completely clear DTCs. ☞ After Repair Procedure COMPLETE OBD II Drive Mode. RERUN OBD Test.
		No	RECONNECT all components. Go to next step.
25	CHECK CANISTER DRAIN CUT VALVE (CDCV) • Key off. • Remove CDCV. • Confirm CDCV is not damaged, and that air vents are tight when at ON. • **Is fault detected?**	Yes	REPLACE CDCV. RECONNECT all components. RESET PCM to completely clear DTCs. ☞ After Repair Procedure COMPLETE OBD II Drive Mode. RERUN OBD Test.
		No	Inspect and repair any detached, incorrectly installed or cracked hoses between the charcoal canister and CDCV. RECONNECT all components. RESET PCM to completely clear DTCs. ☞ After Repair Procedure COMPLETE OBD II Drive Mode. RERUN OBD Test.

DTC P0460	Fuel gauge sender unit circuit malfunction (Open/short and functional)
DESCRIPTION	• DTC P0460 indicates fuel level input circuit malfunction due to low or high fuel level input circuit input to PCM or mechanically stuck fuel pump

[Possible Cause]

- Empty fuel tank
- Overfilled fuel tank
- Fuel pump mechanically stuck open
- Fuel pump mechanically stuck closed
- Incorrect fuel gauge
- Damaged fuel gauge or instrument cluster
- Fuel level input circuit open
- Fuel level input circuit shorted to pround circuit
- Fuel level input shorted to power circuit
- Damaged PCM

STEP	INSPECTION		ACTION
1	VERIFICATION OF FUEL TANK LEVEL • Key on, engine off. • Record vehicle fuel gauge reading. • If during initial 30 seconds of both readings, fuel gauge is between one quarter and three quarters filled but fuel level input PID indicates much higher or lower reading (approximately 100% or 0%), check fuel pump resistance. Access fuel level input PID NGS tester. • **Is fuel level in fuel tank between one quarter (25% on FLI PID) and three quarters (75% on FLI PID) filled?**	Yes	Go to next step.
		No	INSPECT fuel tanks for leaks. SERVICE as necessary. EVALUATE fuel tank for overfilled condition (greater than 75%). ADD fuel tank for under filled condition (less than 25%). RERUN OBD Test. Go to next step.
2	CHECK FUEL LEVEL INPUT VOLTAGE • Key on, engine off. • Access FLI V PID. • **Is FLI V PID voltage between 1.24 and 2.90 volts?**	Yes	CHECK for mechanically stuck fuel pump.
		No	Go to next step.
3	COMPARE FUEL LEVEL INPUT CIRCUIT VOLTAGE CHECK AT BREAKOUT BOX AND NGS TESTER • Key off. • Disconnect PCM. Inspect for damaged or pushed out pins, corrosion and loose wires. Service as necessary. • Install breakout box. Connect PCM to breakout box. • Key on, engine off. • Measure voltage between Test Pin 63 and Test Pin 91 at breakout box. • **Are both voltage readings at breakout box and NGS tester between 1.24 and 2.90 volts?**	Yes	Go to next step.
		No	**For either voltage reading greater than 10 volts:** CHECK for installation of proper fuel gauge at instrument cluster. REPLACE fuel gauge when necessary. RERUN Pinpoint test step 3. **For either voltage reading greater than 2.90 volts or less than 1.24 volts:** REMOVE breakout box. REPLACE PCM. RERUN OBD test. **For both voltage readings greater than 2.90 volts or less than 1.24 volts:** Check fuel pump resistance.

DTC P0500	Vehicle speed sensor (VSS) malfunction
DESCRIPTION	• DTC P0500 indicates VSS input signal has been detected out of self-test range

[Possible Cause]
- Damaged VSS
- Damaged PCM
- Open in VSS (+)/VSS (–) harness circuit
- Short to ground in VSS (+)/VSS (–) harness circuit
- Short to power circuit

STEP	INSPECTION		ACTION
1	CHECK CONTINUITY OF VSS HARNESS CIRCUIT • Key off. • Disconnect PCM. Inspect for damaged or pushed out pins, corrosion, loose wires, etc. Service as necessary. • Install breakout box. PCM disconnected. • Disconnect VSS. • Measure resistance between Test Pin 58 at breakout box and VSS (+) circuit at VSS connector. • Measure resistance between Test Pin 33 at breakout box VSS (–) circuit at VSS connector. • **Is each resistance less than 5.0 ohms?**	Yes	Go to next step.
		No	SERVICE open in harness circuit. REMOVE breakout box. RECONNECT all components. RESET PCM to completely clear DTCs. ☞ After Repair Procedure COMPLETE OBD II Drive Mode. RUN VSS Drive Mode to verify repair.
2	CHECK VSS HARNESS CIRCUITS FOR SHORTS TO SIG RTN AND GROUND • Key off. • VSS disconnected. • Breakout box installed. PCM disconnected. • Measure resistance between Test Pin 58 and Test Pins 51, 103, 33, 91 and 71 at breakout box. • Measure resistance between Test Pins 33 and 71 at breakout box. • **Is each resistance greater than 500 ohms?**	Yes	Go to next step.
		No	SERVICE short circuit. REMOVE breakout box. RECONNECT all components. RESET PCM to completely clear DTCs. ☞ After Repair Procedure COMPLETE OBD II Drive Mode. RUN VSS Drive Mode verify repair.
3	CHECK VSS RESISTANCE • Key off. • VSS disconnected. • Measure VSS resistance. • **Is resistance between 190 and 250 ohms?**	Yes	REMOVE breakout box. REPLACE PCM. RECONNECT VSS. RUN VSS Drive Mode verify repair.
		No	REPLACE VSS. REMOVE breakout box. RECONNECT PCM. RUN VSS Drive Mode verify repair.

DTC	P0505 P1504 P1507	**Idle air control (IAC) system malfunction** **Idle air control (IAC) valve circuit malfunction** **Idle air control (IAC) system underspeed error**
DESCRIPTION		• DTC P0505 indicates IAC system malfunction • DTC P1504 indicates IAC valve circuit malfunction • DTC P1507 indicates IAC underspeed error

[Possible Cause]
- IAC valve signal circuit open
- IAC valve signal circuit shorted to power circuit
- IAC valve signal short to ground (P1504)
- IAC valve power circuit open
- Air inlet plugged (P0505, P1507)
- Air inlet leakage (P1507)
- Damaged IAC valve component
- Damaged throttle body (P0505, P1507)
- Damaged PCM

STEP	INSPECTION		ACTION
1	CHECK POWER CIRCUIT TO IAC VALVE • Key off. • Disconnect IAC valve vehicle harness connector. • Key on. • Measure voltage between power circuit at IAC valve vehicle harness connector and battery ground. • **Is voltage greater than 10.5 volts?**	Yes	Go to next step.
		No	SERVICE open in power circuit to IAC valve. RECONNECT all components. RERUN OBD Test.
2	CHECK IAC VALVE RESISTANCE • Key off. • IAC valve connector disconnected. • Measure solenoid resistance. **Note** • Due to diode in solenoid, place DVOM (+) lead on power circuit pin and (–) lead on IAC valve pin. • **Is resistance between 6.0 and 13.0 ohms?**	Yes	Go to next step.
		No	REPLACE IAC valve assembly. RECONNECT all components. RERUN OBD Test.
3	CHECK IAC VALVE FOR AN INTERNAL SHORT TO IAC CASE • Key off. • IAC valve connector disconnected. • Measure resistance from either IAC valve pin to IAC valve assembly case. • **Is resistance greater than 10,000 ohms?**	Yes	**For DTC P1504:** Go to step 6. **All others:** Go to next step.
		No	REPLACE IAC valve assembly. RECONNECT all components. RERUN OBD Test.
4	CHECK AIR INLET FOR PLUGGING • Key off. • Inspect entire air inlet system for debris blockage and other damage. • Remove and inspect air filter element for excessive dirt. • **Is air inlet system okay?**	Yes	Go to next step.
		No	SERVICE as necessary. RECONNECT all components. RERUN OBD Test.

5	CHECK FOR VACUUM LEAKS
	• Key on, engine running.
	• With engine running at idle, listen for vacuum leaks.
	• Inspect the entire air inlet system from MAF sensor to intake manifold for leaks such as:
	  • Cracked or punctured air inlet tube
	  • Loose air inlet tube at air cleaner housing or throttle body
	  • IAC valve assembly or gasket seal
	  • EGR valve gasket seal
	  • Vacuum supply connector and hose
	  • Positive crankcase ventilation (PCV) valve connectors and hose
	• **Are any leaks detected in above areas?**
		Yes	SERVICE as necessary.
			RECONNECT all components.
			RERUN OBD Test.

		No	Go to next step.

STEP	INSPECTION		ACTION

6	CHECK IAC VALVE SIGNAL CIRCUIT CONTINUITY
	• Key off.
	• IAC valve disconnected.
	• Disconnect PCM. Inspect for damaged or pushed out pins, corrosion, loose wires, etc. Service as necessary.
	• Install breakout box. Leave PCM disconnected.
	• Measure resistance between appropriate Test Pin at breakout box and IAC circuit at IAC valve connector.
	  • IAC valve terminal A and Test Pin 20
	  • IAC valve terminal B and Test Pin 83
	• **Is resistance less than 5.0 ohms?**
		Yes	Go to next step.

		No	SERVICE open circuit. REMOVE breakout box. RECONNECT all components. RERUN OBD Test.

7	CHECK IAC VALVE CIRCUIT FOR SHORT TO POWER CIRCUIT
	• Key off.
	• Breakout box installed. PCM disconnected.
	• IAC valve disconnected.
	• Key on, engine off.
	• Measure voltage between appropriate Test Pin at breakout box and chassis ground.
	  • IAC valve terminal A=Test Pin 20
	  • IAC valve terminal B=Test Pin 83
	• **Is voltage less than 1.0 volt?**
		Yes	Go to next step.

		No	SERVICE short circuit. REMOVE breakout box. RECONNECT all components. RERUN OBD Test.

8	CHECK IAC VALVE SIGNAL CIRCUIT FOR SHORT TO GROUND
	• Key off.
	• Breakout box installed. PCM disconnected.
	• IAC valve disconnected.
	• Measure resistance between appropriate Test Pin and Test Pins 51 and 103 (PWR GND) at breakout box.
	  • IAC valve terminal A=Test Pin 20
	  • IAC valve terminal B=Test Pin 83
	• **Is each resistance greater than 10,000 ohms?**
		Yes	Go to next step.

		No	SERVICE short circuit. RECONNECT all components. RERUN OBD Test.
9	CHECK IAC VALVE SIGNAL FROM PCM • Key off. • Breakout box installed. • Reconnect PCM to breakout box. • Reconnect IAC valve. • Connect DVOM between Test Pin 83 and Test Pin 51 at breakout box. • Start engine. • Slowly increase rpm to 3,000 rpm. • **Is voltage between 3.0 and 11.5 volts?**	Yes	For Continuous Memory DTCs P1504 and P1507. Go to next step. INSPECT throttle body for damage, SERVICE as necessary. If okay, REPLACE IAC valve assembly. RESET PCM to completely clear DTCs. ☞ After Repair Procedure COMPLETE OBD II Drive Mode. RERUN OBD Test.
		No	REPLACE PCM. REMOVE breakout box. RECONNECT all components. RERUN OBD Test.

STEP	INSPECTION		ACTION

10	CHECK IAC SYSTEM FOR INTERMITTENT OPEN OR SHORT
	• NGS tester connected.
	• Key on engine running.
	• Access IAC and RPM PIDs.
	• With engine at normal operating temperature, accessories off and at idle, the IAC duty cycle should read between 20% and 45%.
	• Observe IAC and RPM PIDs for indication fault while performing following at idle:
	  • Lightly tap on IAC valve assembly and wiggle harness connector to simulate road shock
	  • Grasp vehicle harness closest to IAC valve assembly. Shake and bend a small section of harness from IAC to dash panel and from dash panel to PCM
	• **Do IAC or RPM PIDs suddenly change in value indicating fault?**
		Yes	ISOLATE fault and SERVICE as necessary.
			RECONNECT all components.
			RESET PCM to completely clear DTCs.
			☞ After Repair Procedure
			COMPLETE OBD II Drive Mode.
			RERUN OBD test.

		No	**For idle quality, starting, or stalling symptoms currently present:** REPLACE IAC valve component. RECONNECT all components. RESET PCM to completely clear DTCs. ☞ After Repair Procedure COMPLETE OBD II Drive Mode. **All others:** Unable to duplicate and/or identify fault at this time. Intermittent poor connection or component malfunction (REPAIR or REPLACE as necessary). Go to ENGINE SYMPTOM TROUBLESHOOTING No.27.

DTC	P0603 P0605	PCM Keep alive memory (KAM) test error PCM Read only memory (ROM) test error
DESCRIPTION		• DTC P0603 indicates PCM Keep Alive Memory (KAM) error • DTC P0605 indicates PCM Read Only Memory (ROM) error

[Possible Cause]
- Battery terminals corrosion or loose connections
- Improper keep alive power circuit wire routing
- Harness open in keep alive power circuit
- Damaged PCM

STEP	INSPECTION		ACTION
1	CHECK BATTERY TERMINALS **Note** • If Keep Alive Power (KAPWR) is interrupted to PCM (i.e. when breakout box is installed or battery is disconnected), DTC P0603 and/or P0605 may be generated on first power-up. • Inspect battery cables for loose connections, corrosion, etc. • **Are battery terminal connections in good condition?**	Yes	Go to next step.
		No	SERVICE battery terminals as necessary. RERUN OBD Test.
2	INSPECT ENGINE COMPARTMENT FOR PROPER WIRE ROUTING • Inspect PCM wiring for proximity to ignition components or wires. • **Is wiring too close to ignition components or wires?**	Yes	REROUTE as necessary. RERUN OBD Test.
		No	Engine compartment wire routing is okay. Go to next step.
3	CHECK KEEP ALIVE POWER CIRCUIT TO PCM • Key off. • Disconnect PCM. Inspect for damaged or pushed out pins, corrosion, loose wires, etc. Service as necessary. • Install breakout box. Leave PCM disconnected. • Measure voltage between Test Pin 55 and Test Pin 51 or 103 at breakout box. • While observing DVOM, grasp PCM harness and wiggle, shake or bend small section while working from PCM to dash panel. • **Is voltage less than 10.5 volts?**	Yes	ISOLATE and SERVICE open in keep alive power circuit. REMOVE breakout box. RECONNECT PCM. RERUN OBD Test.
		No	No open in keep alive power circuit harness detected. REMOVE breakout box. RECONNECT PCM. Go to next step.
4	CHECK FOR REPEAT OF DTC P0603/P0605 • Activate KOEO self-test. • **Is DTC P0603/P0605 retrieved?**	Yes	REPLACE PCM. RERUN OBD Test.
		No	SERVICE other DTCs as necessary. If none, testing is complete. DTC P0603/P0605 was due to previous service action mentioned in step 1.

DTC P0704	Clutch switch input circuit malfunction
DESCRIPTION	• DTC P0704 indicates malfunction of the neutral or clutch switch.

[Possible Cause]
- Crank engine while in self test
- Starter interlock switch disconnected during OBD Test
- Clutch switch circuit shorted to power
- Damaged clutch or neutral switch
- Damaged PCM

STEP	INSPECTION		ACTION

1	**Note**
	• During self test, clutch pedal must be pressed down and gearshift lever in NEUTRAL.
	• Key off.
	• NGS tester connected.
	• Key on, engine off.
	• Look for CPP/PNP PID cycling ON/OFF with:
	  • Transaxle in neutral, then shift into gear and clutch pedal up.
	  • Transaxle in gear and clutch pedal up then down.
	• **Does reading change from ON to OFF for both switches?**
		Yes	Fault intermittent.
			DISCONNECT PCM.
			INSPECT both ends of connector for damaged or pushed out pins, corrosion and loose wires.
			SERVICE as necessary.
			If okay, REPLACE PCM.
			RERUN OBD Test.

		No	Go to next step.
2	CHECK CLUTCH/NEUTRAL SWITCHES • Key off. • Located the clutch switch near clutch pedal and neutral switch near transaxle shift linkage. • Inspect both switches and brackets for damage. Service as required. • Disconnect clutch and neutral electrical vehicle harness connector and inspect for damage, pushed out or broken pins and broken wires. Service as required. • Measure resistance across the clutch switch terminals with clutch pedal down. • Measure resistance across the neutral switch terminals with shift lever in neutral. • **Is resistance less than 5.0 ohms for both switches?**	Yes	Go to next step.
		No	REPLACE damaged clutch or neutral switch. RECONNECT components. RERUN OBD Test.
3	CHECK RESISTANCE OF CLUTCH/NEUTRAL CIRCUIT • Key off. • Disconnect NGS tester. • Disconnect PCM. Inspect for damaged or pushed out pins, corrosion and loose wires. Service as necessary. • Install breakout box. Leave PCM disconnected. • Measure resistance between Test Pin 91 at breakout box and same Test Pin 91 pin at clutch and neutral vehicle harness connector. • **Is each resistance less than 5.0 ohms?**	Yes	Go to next step.
		No	SERVICE open circuit. REMOVE breakout box. RECONNECT all components. RERUN OBD Test.
4	CHECK CLUTCH/NEUTRAL CIRCUIT FOR SHORT • Key off. • NGS tester disconnected. • Breakout box installed PCM disconnected. • Clutch and neutral vehicle harnesses disconnected. • Measure resistance between Test Pins 64 and 91 at breakout box and chassis ground. • **Is resistance greater than 10,000 ohms?**	Yes	REPLACE PCM. REMOVE breakout box. RECONNECT all components. RERUN OBD Test.
		No	SERVICE short circuit. REMOVE breakout box. RECONNECT all components. RERUN OBD Test.

DTC P1001	Active self-test standard protocol communication error
DESCRIPTION	• KOER self-test cannot be completed

[Possible Cause]
- Damaged DLC
- Incorrect self test activation method
- Constant voltage is not in specification
- Idle RPM out of specification
- Open in DLC harness circuit
- Short in DLC harness circuit
- Damaged main relay circuit
- Damaged PCM

STEP	INSPECTION		ACTION
1	VERIFY SELF TEST ACTIVATION METHOD • Key off. • Disconnect NGS tester from DLC. Inspect DLC for damage. Service as necessary. • Verify that the correct procedure was used to activate Continuous Memory, KOEO or KOER self-test. • **Was the correct self-test activation method used?**	Yes	Go to next step.
		No	COMPLETE self test using correct procedure.
2	CHECK FOR CONSTANT VOLTAGE AT TP SENSOR • Key off. • TP sensor disconnected. • Key on, engine off. • Measure voltage between constant voltage and TP sensor ground circuits at TP sensor connector. • Key off. • **Was voltage between 4.0 and 6.0 volts?**	Yes	RECONNECT TP sensor. Go to next step.
		No	REPAIR open in constant voltage circuit. RECONNECT TP sensor.
3	ABILITY TO ACCESS CONTINUOUS MEMORY DTCs • **Could Continuous Memory DTCs be accessed before this OBD Test was entered?**	Yes	Go to next step.
		No	Go to step 6.
4	ABILITY TO ACTIVATE KOEO SELF-TEST • **Could KOEO self-test be activated and completed before this OBD Test was entered?**	Yes	Go to next step.
		No	Go to step 6.
5	ABILITY TO ACTIVATE KOER SELF-TEST • **Could KOER self-test be activated and completed before this OBD Test was entered?**	Yes	CHECK that correct PCM is installed on vehicle.
		No	Go to next step.

STEP	INSPECTION		ACTION
6	RETRIEVE ANY CONTINUOUS MEMORY DTCs **Note** • If failures are present in the following components or systems, this could cause PCM to complete KOER self-test and/or cause PCM to generate NGS tester communication error message: ① Idle speed control ② EGR system ③ Fuel control system ④ Vehicle speed sensor circuits ⑤ Mass air flow sensor circuits ⑥ Transaxle range switch circuits **Note** • For information on retrieving MIL and non-MIL DTCs, continuous memory self-test. • NGS tester connected. • Key on, engine off. • Retrieve and record all Continuous Memory DTCs (MIL and non-MIL). • Key off. • **Were any Continuous Memory DTCs present.**	Yes	Go to appropriate DTC chart.
		No	Go to step 7.
7	CHECK POWER CIRCUIT AT DLC • Key off. • Inspect the DLC for damage. Service as necessary. • Measure voltage between power circuit cavity at DLC and engine block ground. • **Is voltage greater than 10.5 volts?**	Yes	Go to next step.
		No	SERVICE open in DLC power circuit. RERUN OBD Test.
8	CHECK DLC CHASSIS GROUND CONTINUITY • Key off. • Measure resistance between chassis ground circuit cavity at DLC and chassis ground. • **Is resistance less than 5.0 ohms?**	Yes	Go to next step.
		No	SERVICE open in DLC chassis ground circuit. RERUN OBD Test.
9	CHECK DLC GROUND CIRCUIT CONTINUITY • Key off. • Disconnect PCM. Inspect for damaged or pushed out pins, loose wires, corrosion, etc. Service as necessary. • Install breakout box. Leave PCM disconnected. • Disconnect NGS tester. • Measure resistance between Test Pin 51 or 103 at breakout box and ground circuit cavity at DLC. • **Is resistance less than 5.0 ohms?**	Yes	Go to next step.
		No	SERVICE open in DLC ground circuit. RECONNECT PCM. REMOVE breakout box. RERUN OBD Test.
10	CHECK DLC BUS(–) CIRCUIT CONTINUITY • Key off. • Breakout box installed. Leave PCM disconnected. • Measure resistance between Test Pin 15 BUS(–) at breakout box and BUS(–) circuit at DLC. • **Is resistance less than 5 ohms?**	Yes	Go to next step.
		No	SERVICE open in DLC BUS(–) circuit. RECONNECT PCM. REMOVE breakout box. RERUN OBD Test.

STEP	INSPECTION		ACTION
11	CHECK BUS(–) CIRCUIT FOR SHORT TO CHASSIS GROUND • Key off. • Breakout box installed. Leave PCM disconnected. • Disconnect NGS tester. • Measure resistance between Test Pin 15 at breakout box and chassis ground. • **Is resistance greater than 10,000 ohms?**	Yes	Go to next step.
		No	SERVICE short to ground in the BUS(–) circuit. RECONNECT chassis PCM. REMOVE breakout box. RERUN OBD Test.
12	CHECK BUS(–) CIRCUIT FOR SHORT TO POWER • Key off. • Breakout box installed. Leave PCM disconnected. • Disconnect NGS tester. • Key on, engine off. • Measure voltage between Test Pin 15 BUS(–) and Test Pin 51 or 103 at breakout box. • **Was voltage greater than 6.0 volts?**	Yes	SERVICE Short to power in the BUS(–) circuit. RECONNECT PCM. REMOVE breakout box. RERUN OBD Test.
		No	Go to next step.
13	CHECK DLC BUS(+) CIRCUIT CONTINUITY • Key off. • Breakout box installed. Leave PCM disconnected. • Measure resistance between Test Pin 16 at breakout box and BUS(+) circuit at DLC. • **Is resistance less than 5.0 ohms?**	Yes	Go to next step.
		No	SERVICE open in DLC (+) circuit. RECONNECT PCM. REMOVE breakout box. RERUN OBD Test.
14	CHECK BUS(+) CIRCUIT FOR SHORT TO CHASSIS GROUND • Key off. • Disconnect NGS tester. • Measure resistance between Test Pin 16 BUS(+) at breakout box and chassis ground. • **Is resistance greater than 10,000 ohms?**	Yes	There is no short chassis ground in BUS(+) circuit. Go to next step.
		No	SERVICE short to power in BUS(+) circuit. RECONNECT PCM. REMOVE breakout box. RERUN OBD Test.
15	CHECK BUS(+) CIRCUIT FOR SHORT TO POWER • Key off. • Breakout box installed. Leave PCM disconnected. • Disconnect NGS tester. • Key on, engine off. • Measure voltage between Test Pin 16 and Test Pins 51 or 103 at breakout box. • **Was voltage greater than 1.0 volt?**	Yes	SERVICE short to power in BUS(+) circuit. RECONNECT PCM. REMOVE breakout box. RERUN OBD Test.
		No	REPLACE PCM.

DTC P1100	MAF sensor intermittent
DESCRIPTION	• Continuous Memory DTC P1100 indicates MAF sensor signal went below 0.39 volts or above 4.35 volts (refer to Voltage to Mass Air Flow Conversion Table at beginning of this Test in 01–40A MASS AIR FLOW SENSOR INSPECTION [FS]) sometime during last 40 warm-up cycles

[Possible Cause]
- Poor continuity with MAF sensor connector
- Poor continuity with MAF harness
- MAF harness intermittent short
- MAF sensor internal intermittent open or short

STEP	INSPECTION		ACTION
1	CHECK FOR MAF CIRCUIT INTERMITTENT VOLTAGE INPUT • Start engine and bring to idle. **Note** • If stabilized idle is not stabilized at minimum of 700 rpm, go to ENGINE SYMPTOM TROUBLESHOOTING. • NGS tester connected. • Run throttle up to 1,500 rpm for 5 seconds then bring back to idle. • Access MAF V PID for fault indication while performing following: • Lightly tap on MAF sensor and wiggle harness connector to simulate road shock • **Does MAF V PID go below minimum 0.39 volts or above maximum 3.90 volts?**	Yes	DISCONNECT and INSPECT MAF sensor connector. If okay, REPLACE MAF sensor. RESET PCM to completely clear DTCs. ☞ After Repair Procedure COMPLETE OBD II Drive Mode. RERUN OBD Test.
		No	Go to next step.

2	CHECK MAF HARNESS TO PCM FOR INTERMITTENT OPENS OR SHORTS
	• Key off.
	• Disconnect PCM. Inspect for damaged or pushed out pins, corrosion, loose wires, etc. Service as necessary.
	• Install breakout box. Reconnect PCM.
	• Key on, engine off.
	• Connect DVOM between Test Pin 88 and Test Pin 36 at breakout box.
	• While viewing DVOM, do the following:
	  • Grasp vehicle harness closest to MAF sensor connector
	  • Shake and bend small section of harness all way to dash panel
	  • Wiggle, shake and bend harness from dash panel to PCM
	• **Does voltage go below minimum 0.39 volts or above maximum 3.90 volts?**
		Yes	ISOLATE fault and SERVICE as necessary.
			RECONNECT all components.
			RESET PCM to completely clear DTCs.
			☞ After Repair Procedure
			COMPLETE OBD II Drive Mode.
			RERUN OBD Test.

		No	Unable to duplicate and/or identify fault at this time. Intermittent poor connection or component malfunction (REPAIR or REPLACE as necessary). Go to SYMPTOM TROUBLESHOOTING No.27.

DTC P1101	MAF sensor out of self-test range
DESCRIPTION	• Key On Engine Running (KOER) DTC P1101 indicates MAF signal circuit was not between 0.34 and 1.96 volts during KOER self-test

[Possible Cause]
- Damaged MAF sensor
- Contaminated MAF sensor
- MAF sensor partially connected
- Open MAF sensor ground circuit
- Open PCM ground circuit (between PCM and MAF sensor ground circuit)
- Damaged PCM

STEP	INSPECTION		ACTION
1	CHECK FOR MAF SENSOR CONTINUOUS MEMORY CODES • Drive vehicle for 6 to 10 minutes. • Rerun Continuous Memory and KOEO self-test. • **Is Continuous Memory DTC present with KOER DTC P1101?**	Yes	**For Continuous Memory DTC P0102:** Go to appropriate MAF sensor Monitor DTC test. **For Continuous Memory DTC P0103:** Go to appropriate MAF sensor Monitor DTC test. **For all other Continuous Memory DTCs:** Go to appropriate DTC test.
		No	Go to next step.
2	CHECK MAF SENSOR OUTPUT VOLTAGE **Note** • DTC P1101 could be generated by low charged vehicle battery or the garage exhaust ventilation system. Service battery as necessary then remove ventilation system and properly vent to outside atmosphere. Rerun KOEO or KOER self-test. • Key off. • Check that MAF sensor is corrected. If not, service as necessary. • Disconnect PCM. Inspect for damaged or pushed out pins, corrosion, loose wires, etc. Service as necessary. • NGS tester connected. • Install breakout box. Connect PCM to breakout box. • Key on, engine off. • Measure between Test Pin 88 and Test Pins 24 or 103 at breakout box. • **Is voltage greater than 0.20 volts?**	Yes	The MAF sensor signal circuit voltage is greater than expected. Go to step 14.
		No	Go to step 10.
3	CHECK MAF SENSOR GROUND CIRCUIT CONTINUITY • Key off. • MAF sensor disconnected. • Breakout box installed. • Disconnect PCM. • Disconnect NGS tester from DLC. • Measure resistance between MAF sensor ground circuit at MAF sensor connector and battery negative post. • **Is resistance less than 10 ohms?**	Yes	MAF sensor ground circuit harness circuit to MAF sensor is okay. RECONNECT NGS tester. Go to next step.
		No	SERVICE open in MAF sensor ground harness circut. REMOVE breakout box. RECONNECT all components. RESET PCM to completely clear DTCs. ☞ After Repair Procedure COMPLETE OBD II Drive Mode. RERUN OBD Test.
4	CHECK PCM GROUND CIRCUIT (BETWEEN PCM AND MAF SENSOR GROUND CIRCUIT) CIRCUIT CONTINUITY • Key off. • MAF sensor disconnected. • Breakout box installed. PCM disconnected. • Measure resistance between MAF sensor connector and Test Pin 36 at breakout box. • **Is resistance less than 5.0 ohms?**	Yes	PCM ground circuit harness to PCM is okay. Go to next step.
		No	SERVICE open in PCM ground circuit harness. REMOVE breakout box. RECONNECT all components. RESET PCM to completely clear DTCs. ☞ After Repair Procedure COMPLETE OBD II Drive Mode. RERUN OBD Test.

STEP	INSPECTION		ACTION
5	CHECK MAF CIRCUIT FOR SHORT TO GROUND IN PCM • Key off. • MAF sensor disconnected. • Breakout box installed. • Reconnect PCM to breakout box. • Disconnect NGS tester from DLC. • Measure resistance between Test Pin 88 and Test Pins 36 and 24 or 103 at breakout box. • **Is each resistance greater than 10,000 ohms?**	Yes	RECONNECT NGS tester. Go to next step.
		No	MAF sensor signal circuit shorted to ground or PCM ground in PCM. REMOVE breakout box. RECONNECT MAF sensor. RESET PCM to completely clear DTCs. ☞ After Repair Procedure COMPLETE OBD II Drive Mode. RERUN OBD Test.
6	CHECK PCM GROUND CIRCUIT (BETWEEN PCM AND MAF SENSOR GROUND CIRCUIT) FOR SHORT TO GROUND CIRCUIT IN PCM • Key off. • MAF sensor disconnected. • Breakout box installed. • PCM connected to breakout box. • NGS disconnected from DLC. • Measure resistance between Test Pin 36 and Test Pins 51 or 103 at breakout box. • **Is resistance greater than 10,000 ohms?**	Yes	RECONNECT NGS tester. Go to next step.
		No	PCM ground circuit shorted to ground circuit in PCM. REPLACE PCM. REMOVE breakout box. RECONNECT all components. RERUN OBD Test.
7	CHECK MAF SENSOR CIRCUIT OUTPUT • Key off. • MAF sensor connected. • Breakout box installed. • PCM connected. • Key on, engine running. **Note** • If idle is not stabilized at minimum of 700 rpm, go to ENGINE SYMPTOM TROUBLESHOOTING. • Measure voltage between Test Pin 88 at breakout box and battery negative post. • **Is voltage between 0.34 and 1.96 volts at idle?**	Yes	MAF SIG to PCM is okay. Go to next step.
		No	MAF sensor signal circuit or MAF sensor ground circuit is open or MAF SIG is shorted to MAF RTN in MAF sensor. REPLACE MAF sensor. REMOVE breakout box. RECONNECT PCM. RESET PCM to completely clear DTCs. ☞ After Repair Procedure COMPLETE OBD II Drive Mode. RERUN OBD Test.
8	VERIFY MAF SENSOR CIRCUIT INPUT AND OUTPUT • Key off. • MAF sensor connected. • Breakout box installed. • PCM connected. • Key on, engine running. • Measure voltage between Test Pin 88 and Test Pin 36 at breakout box. • **Is voltage between 0.34 and 1.96 volts?**	Yes	PCM ground circuit in MAF sensor is okay. Go to next step.
		No	PCM ground circuit open in MAF sensor. REPLACE MAF sensor. REMOVE breakout box. RECONNECT PCM. RESET PCM to completely clear DTCs. ☞ After Repair Procedure COMPLETE OBD II Drive Mode. RERUN OBD Test.
9	CHECK MAF SENSOR CIRCUIT OUTPUT WITH NGS TESTER • Key off. • MAF sensor connected. • Key on, engine running. • Access MAF V PID with NGS tester at idle. • **Is MAF V PID between 0.34 and 1.96 volts?**	Yes	Unable to identify fault at this time. Check possible intermittent. Go to SYMPTOM TROUBLESHOOTING No.27.
		No	MAF sensor signal circuit or PCM ground circuit is open or shorted together in PCM. REPLACE PCM. REMOVE breakout box. RECONNECT PCM. RESET PCM to completely clear DTCs. ☞ After Repair Procedure COMPLETE OBD II Drive Mode. RERUN OBD Test.

STEP	INSPECTION		ACTION
10	CHECK CONTINUITY OF POWER CIRCUIT • Key off. • MAF sensor disconnected. • Disconnect PCM. Inspect for damaged or pushed out pins, corrosion, loose wires, etc. Service as necessary. • Install breakout box. Leave PCM disconnected. • Measure resistance between MAF sensor connector and Test Pin 71 or 97 at breakout box. • **Is resistance less than 5.0 ohms?**	Yes	Power circuit harness to PCM is okay. Go to next step.
		No	Service open in power circuit harness. REMOVE breakout box. RECONNECT all components. RESET PCM to completely clear DTCs. ☞ After Repair Procedure COMPLETE OBD II Drive Mode. RERUN OBD Test.
11	CHECK MAF SENSOR CIRCUIT FOR SHORTS TO GROUND CIRCUIT AND PCM GROUND CIRCUIT • Key off. • MAF sensor disconnected. • Breakout box installed. • PCM disconnected. • Disconnect NGS tester from DLC. • Measure resistance between Test Pin 88 and Test Pins 36 and 24 or 103 at breakout box. • **Is each resistance greater than 10,000 ohms?**	Yes	MAF sensor signal, PCM ground and ground harness circuits to PCM are okay. RECONNECT NGS tester. Go to next step.
		No	Service short circuit between MAF sensor signal and ground or PCM ground. REMOVE breakout box. RECONNECT all components. RESET PCM to completely clear DTCs. ☞ After Repair Procedure COMPLETE OBD II Drive Mode. RERUN OBD Test.
12	CHECK PCM GROUND CIRCUIT (BETWEEN PCM AND MAF SENSOR GROUND) FOR SHORT TO GROUND CIRCUITS. • Key off. • MAF sensor disconnected. • Breakout box installed. PCM disconnected. • NGS tester disconnected from DLC. • Measure resistance between Test Pin 36 and Test Pin 51 or 103 at breakout box. • **Is each resistance greater than 10,000 ohms?**	Yes	RECONNECT NGS tester. Go to next step.
		No	SERVICE short circuit between PCM ground circuit and ground circuit. REMOVE breakout box. RECONNECT all components. RESET PCM to completely clear DTCs. ☞ After Repair Procedure COMPLETE OBD II Drive Mode.
13	CHECK CONTINUITY OF MAF SENSOR SIGNAL CIRCUIT • Key off. • MAF sensor disconnected. • Breakout box installed. PCM disconnected. • Measure resistance between MAF circuit at MAF sensor connector and Test Pin 88 at breakout box. • **Is resistance less than 5.0 ohms?**	Yes	MAF sensor signal harness circuit to PCM is okay. Go to next step.
		No	SERVICE open in MAF sensor signal harness circuit. REMOVE breakout box. RECONNECT all components. RESET PCM to completely clear DTCs. ☞ After Repair Procedure COMPLETE OBD II Drive Mode. RERUN OBD Test.
14	CHECK GROUND CIRCUIT TO MAF SENSOR • Key off. • MAF sensor disconnected. • Breakout box installed. • PCM connected to breakout box. • Key on, engine off. • Measure voltage between power circuit and ground circuit at MAF sensor vehicle harness connector. • **Is voltage greater than 10.5 volts?**	Yes	Ground harness circuit from battery negative post to MAF sensor is okay. Go to step 4.
		No	Go to step 3.

DTC P1116	ECT sensor input signal out of self-test range
DESCRIPTION	• DTC P1116 (ECT) indicates that corresponding sensor is out of self-test range. Correct range of measurement is • –6.6 °C {20 °F} to 115 °C {240 °F} (KOEO) • 49 °C {120 °F} to 115 °C {240 °F} (KOER)

[Possible Cause]
- Low coolant level
- Damaged harness connector
- Overheated condition
- Poor thermostat operation
- Damaged sensor

STEP	INSPECTION		ACTION
1	CHECK OPERATION, INSTALLATION OF ENGINE COOLANT TEMPERATURE SENSOR • Run engine at 2,000 rpm until engine temperature stabilizes. NO START: • Go to step 3 VEHICLE STALLS: • Return to Symptom Flow Chart • Check that upper radiator hose is hot and pressurized. • Rerun Key On Engine Running (KOER) self-test. • **Is DTC P1116 present?**	Yes	**For symptom of cooling system concern:** Do not service DTC P1116, service next DTC. If no other DTC's exists. RETURN to Symptom Flow Charts. **All others:** Go to next step.
		No	Engine was not during closed loop operating condition. SERVICE other DTCs as necessary.
2	CHECK CONSTANT VOLTAGE CIRCUIT VOLTAGE AT THROTTLE POSITION SENSOR • Key off. • Disconnect TP sensor. • Measure voltage between constant voltage circuit and TP sensor ground circuit at TP sensor vehicle harness connector. • **Is voltage between 4.5 volts and 5.5 volts?**	Yes	There is sufficient constant voltage. RECONNECT TP sensor. Go to next step.
		No	REPAIR open in constant circuit. Go to ENGINE SYMPTOM TROUBLESHOOTING No.31.
3	CHECK RESISTANCE OF ENGINE COOLANT TEMPERATURE SENSOR WITH ENGINE OFF • Key off. • Disconnect ECT sensor. • Measure resistance between sensor signal circuit and TP sensor ground circuit at ECT sensor. • **Is resistance within specification?**	Yes	**For ECT sensor with NO START:** Do not service DTC P1116 at this time. RETURN to Symptom Flow Charts. **All others:** Go to next step.
		No	REPLACE suspect sensor. RECONNECT vehicle harness. RERUN OBD Test.
4	CHECK RESISTANCE OF TEMPERATURE SENSOR WITH ENGINE RUNNING **Note** • Verify engine is at operating temperature before taking ECT readings. • Key off. • Suspect engine coolant temperature sensor disconnected. • Run engine for two minutes at 2,000 rpm. • Measure resistance between sensor signal circuit and TP sensor ground circuit at engine coolant temperature sensor. • **Is resistance within specification?**	Yes	REPLACE PCM. RECONNECT vehicle harness. RERUN OBD Test.
		No	REPLACE suspect sensor. RECONNECT vehicle harness. RERUN OBD Test.

DTC P1120	TP sensor out of range low
DESCRIPTION	• DTC P1120 indicates throttle position (TP) signal within the self-test range but with closed throttle position range of below 0.17 volts

[Possible Cause]
- Frayed wires
- Corrosion on TP sensor, PCM or harness connectors
- Constant voltage circuit harness open or shorts
- Damaged TP sensor
- Damaged PCM

STEP	INSPECTION		ACTION
1	CHECK FRAYED TP CIRCUIT WIRES OR CORROSION ON CONNECTORS • Do complete visual inspection of harness connector at TP sensor (including pins) for corrosion. • Do complete visual inspection of harness wires between TP sensor and PCM for insulation fraying and corrosion. • **Is a fault present?**	Yes	SERVICE as necessary. RESET PCM to completely clear DTCs. ☞ After Repair Procedure COMPLETE OBD II Drive Mode. RERUN OBD Test.
		No	Go to next step.
2	CHECK FOR STUCK TP SENSOR • Key on, engine off. • Access TP V PID with NGS tester. • Slowly move throttle from closed throttle position to wide open throttle and observe TP V PID. • **While opening throttle, is TP V PID below 0.49 volts?**	Yes	Go to next step.
		No	Go to DTC P1125 (Continuous).
3	CHECK CONSTANT VOLTAGE CIRCUIT VOLTAGE • Key off. • TP sensor disconnected. • Key on, engine off. • Measure voltage between constant voltage circuit and TP sensor ground circuit at TP sensor vehicle harness connector. • **Is voltage between 4.0 and 6.0 volts?**	Yes	Go to next step.
		No	Key off. RECONNECT all components. REPAIR open in constant voltage circuit.
4	CHECK TP SENSOR CIRCUIT CONTINUITY • Key off. • TP sensor disconnected. • Disconnect PCM. Inspect for damaged or pushed out pins, corrosion, loose wires, etc. Service as necessary. • Install breakout box. Leave PCM disconnected. • Measure resistance between TP circuit at TP sensor connector and Test Pin 89 at breakout box. • **Is resistance less than 5.0 ohms?**	Yes	TP SIG harness circuit to PCM is okay. Go to next step.
		No	SERVICE corrosion or open in TP sensor signal circuit harness. RESET PCM to completely clear DTCs. ☞ After Repair Procedure COMPLETE OBD II Drive Mode. RERUN OBD Test.
5	CHECK TP SENSOR SIGNAL TO PCM • Key off. • Connect PCM to breakout box. • Connect TP sensor. • Start engine and idle for 2 minutes. • Measure the voltage between Test Pin 89 and Test Pin 91 at breakout box while slowly opening throttle from closed position. • **Is voltage between 0.17 to 0.49 volts?**	Yes	TP sensor is damaged. REPLACE TP sensor. REMOVE breakout box. RERUN OBD Test.
		No	RERUN OBD Test. If DTC P1120 is still present, go to DTC P1125 (Continuous).

DTC P1121	TP sensor input signal inconsistent with MAF sensor
DESCRIPTION	• Continuous Memory DTC P1121 indicates throttle position is inconsistent with MAF sensor

[Possible Cause]
- Damaged TP sensor
- TP sensor not seated properly (almost completely detached from throttle body)
- Air leak between MAF sensor and throttle body

STEP	INSPECTION		ACTION
1	TP SENSOR AND MAF SENSOR RATIONALITY CHECK • Attempt to start engine. • **Does engine run?**	Yes	Go to next step.
		No	CHECK for major leaks, cracks, and openings between MAF sensor and throttle body.
2	CHECK MECHANICAL OPERATION OF TP SENSOR • Key on, engine off. • Access TP V PID with the NGS tester. • Slowly move throttle from closed throttle position to wide open throttle position and observe TP V PID for smooth reading change. • **While opening and closing the throttle, is there a sudden drop in TP V PID below 0.66 volts or sudden jump in TP V PID above 1.20 volts?**	Yes	TP sensor has internal substrate problem. REPLACE TP sensor. RERUN OBD Test.
		No	Go to next step.
3	CHECK TP SENSOR SIGNAL HIGH VERSUS THE ENGINE LOAD WHILE DRIVING VEHICLE • Key on, engine running. • Do normal drive, exercising throttle and TP sensor while accessing PIDs. • Access TP V PID and LOAD PID with NGS tester and record readings. • **Is TP V PID greater than 2.44 volts and LOAD PID reading less than 25%?**	Yes	CHECK for air leaks between the MAF sensor and throttle body including air noise sounds while engine is running. SERVICE as necessary. If okay, REPLACE TP sensor. RERUN OBD Test.
		No	Go to next step.
4	CHECK TP SENSOR SIGNAL LOW VERSUS THE ENGINE LOAD • Key on, engine running. **Note** • If the vehicle does not start, go to ENGINE SYMPTOM TROUBLESHOOTING. • Access TP V PID and LOAD PID with NGS tester and record readings. • **Is TP V PID reading less than 0.24 volts and LOAD PID reading greater than 60%?**	Yes	CHECK for TP sensor loosely connected to throttle body (screws not securely tightened down). SERVICE as necessary. RESET PCM to completely clear DTCs. ☞ After Repair Procedure COMPLETE OBD II Drive Mode. DRIVE vehicle exercising throttle. RERUN OBD Test. If Continuous Memory P1121 is present, REPLACE MAF sensor.
		No	Go to next step.
5	CHECK TP SENSOR SIGNAL LOW VERSUS THE ENGINE LOAD WHILE DRIVING VEHICLE • Key on, engine running. • Do normal drive, exercising throttle and TP sensor near higher gears (preferably overdrive) while accessing PIDs. • Access TP V PID and LOAD PID with NGS tester and record readings. • **Is TP V PID reading less than 0.24 volts and LOAD PID reading greater than 60%?**	Yes	CHECK for TP sensor loosely connected to the throttle body (screws not securely tightened down). SERVICE as necessary. RESET PCM to completely clear DTCs. ☞ After Repair Procedure COMPLETE OBD II Drive Mode. DRIVE vehicle exercising the throttle. RERUN OBD Test. If Continuous Memory P1121 is now present, REPLACE MAF sensor.
		No	Unable to identify fault at this time. If vehicle does not start, go to ENGINE SYMPTOM TROUBLESHOOTING.

DTC P1124	TP sensor input signal out of self-test range
DESCRIPTION	• TP sensor's rotational setting is not in self-test range of 13.23 to 24.02% (0.43 to 1.17 volts)

[Possible Cause]
- Binding or bent throttle linkage
- TP sensor may not be seated properly (tightened down)
- Throttle plate below closed throttle position
- Throttle plate/screw misadjusted
- Damaged TP sensor
- Damaged PCM

STEP	INSPECTION		ACTION
1	CHECK FOR OTHER DTCS • Active KOEO and KOER self-tests. • **Is KOEO or KOER DTC present?**	Yes	Go to appropriate DTC test.
		No	Go to next step.
2	CHECK FOR STUCK THROTTLE PLATE OR LINKAGE • Visually inspect throttle body and throttle linkage for binding or sticking. • Verify throttle plate and linkage is at closed throttle position. • **Does throttle move freely and return to closed throttle position?**	Yes	Throttle plate and linkage are okay.
		No	SERVICE as necessary. RERUN OBD Test.

DTC P1125	TP sensor circuit intermittent
DESCRIPTION	• Continuous Memory DTC P1125 indicates the TP sensor signal went below 9.80% (0.17 volts) or above 92.27% (4.60 volts) sometime during last 80 warm up cycles

[Possible Cause]
- TP sensor connector with poor continuity
- TP sensor harness with poor continuity
- TP sensor harness intermittent short
- TP sensor internal electrical or substrate open or electrical short

STEP	INSPECTION		ACTION
1	CHECK FOR TP CIRCUIT INTERMITTENT VOLTAGE INPUT Start engine and bring to idle. Run engine up to 1,500 rpm for 5 seconds. Key on, engine running. Access TP V PID for fault indication with NGS tester while performing following: • Lightly tap on TP sensor and wiggle harness connector to simulate road shock • **Is TP V PID changing below the minimum 0.49 volts or above the maximum 4.60 volts?**	Yes	DISCONNECT and INSPECT TP sensor connector. If OK, REPLACE TP sensor. RESET PCM to completely clear DTCs. ☞ After Repair Procedure COMPLETE OBD II Drive Mode. RERUN OBD Test.
		No	Go to next step.
2	CHECK TP SENSOR HARNESS TO PCM FOR INTERMITTENT OPENS OR SHORTS • Key off. • Disconnect PCM. Inspect for damaged or pushed out pins, corrosion, loose wires, etc. Service as necessary. • Install breakout box. Reconnect PCM. • Key on, engine off. • Connect DVOM between Test Pin 89 and Test Pin 91 at the breakout box. • While viewing DVOM: • Grasp vehicle harness closest to TP sensor connector • Shake and bend small section of harness all way to dash panel • Wiggle, shake and bend harness from dash panel to PCM • **Is the voltage changing below minimum 0.49 volts or above maximum 4.60 volts?**	Yes	ISOLATE fault and SERVICE as necessary. RECONNECT all components. RESET PCM to completely clear DTCs. ☞ After Repair Procedure COMPLETE OBD II Drive Mode. RERUN OBD Test.
		No	Unable to duplicate and/or identify fault at this time. Intermittent poor connection or component malfunction (REPAIR or REPLACE as necessary). Go to ENGINE SYMPTOM TROUBLESHOOTING No.27.

DTC P1127	Exhaust system too cool
DESCRIPTION	• DTC P1127 indicates oxygen sensor heater was not on during KOER self test. Accurate testing of oxygen sensor heater is energized when certain temperature criteria is met. The heater will energize based on exhaust temperature modeling which allows for upstream heaters being energized independent of downstream heaters

[Possible Cause]
- Exhaust system too cool

STEP	INSPECTION		ACTION

1	CHECK HEATED OXYGEN SENSOR HEATER RELATED HARNESS
	• Key off.
	• NGS tester connected.
	• Key on, engine on.
	• Access all heated oxygen sensor heater related PIDs.
	  • HTR11
	  • HTR12
	• **Do all PIDs indicate on?**
		Yes	RERUN OBD Test.
			SERVICE any other DTC as necessary.

		No	RUN engine until all PIDs indicate ON. RERUN OBD Test. SERVICE any other DTC.

DTC P1250	Pressure regulator control (PRC) solenoid valve circuit malfunction
DESCRIPTION	• DTC P1250 indicates a fuel pressure regulator control (PRC) solenoid valve circuit malfunction

[Possible Cause]
- Damaged fuel pressure regulator control (PRC) solenoid valve
- Open or shorted circuit
- Damaged PCM

STEP	INSPECTION		ACTION
1	CHECK FOR POWER CIRCUIT TO PRC SOLENOID VALVE • Disconnect PRC solenoid valve connector. • Key on, engine off. • Measure voltage between power circuit at PRC solenoid valve connector and chassis ground. • **Is voltage greater than 10.5 volts?**	Yes	Go to next step.
		No	SERVICE open in power circuit between ignition switch and PRC solenoid valve.
2	CHECK PRC SOLENOID VALVE • Key off. • PRC solenoid valve disconnected. • Measure resistance of terminals at PRC solenoid valve. • **Is resistance less than 5.0 ohms?**	Yes	Go to next step.
		No	REPLACE PRC solenoid valve. RERUN OBD Test.
3	CHECK PRC SOLENOID VALVE CIRCUIT FOR SHORT TO POWER CIRCUIT • Key off. • PRC solenoid valve disconnected. • Disconnect PCM. Inspect for damaged or pushed out pins, corrosion, loose wires, etc. Service as necessary. • Install breakout box. Leave PCM disconnected. • Key on, engine off. • Measure voltage between Test Pin 19 at breakout box and chassis ground. • **Is voltage less than 1.0 volt?**	Yes	Go to next step.
		No	SERVICE short to power. REMOVE breakout box. RECONNECT all components. RERUN OBD Test.
4	CHECK PRC SOLENOID VALVE CIRCUIT FOR SHORT TO GROUND • Key off. • Disconnect NGS tester from DLC. • Breakout box installed. • PCM disconnected. • PRC solenoid valve disconnected. • Measure resistance between Test Pin 19 and Test Pins 51 or 103 at breakout box. • **Is resistance greater than 10,000 ohms?**	Yes	Go to next step.
		No	SERVICE short circuit. REMOVE breakout box. RECONNECT all components. RERUN OBD Test.

STEP	INSPECTION		ACTION
5	CHECK PRC SOLENOID VALVE CIRCUIT CONTINUITY • Key off. • Breakout box installed. • PCM disconnected. • PRC solenoid valve disconnected. • Measure resistance between PRC solenoid valve circuit at PRC solenoid valve vehicle harness connector and Test Pin 19 at breakout box. • **Is resistance less than 5.0 ohms?**	Yes	REPLACE PCM. RECONNECT all components. RERUN OBD Test.
		No	SERVICE open circuit. REMOVE breakout box. RECONNECT all components. RERUN OBD Test.

DTC P1409	EGR valve (Stepper motor) malfunction
DESCRIPTION	• Open or short circuit is observed in EGR valve

[Possible Cause]
- Damaged EGR valve coil
- EGR valve control signal circuit open
- EGR valve control signal circuit short to ground
- EGR valve power circuit open

STEP	INSPECTION		ACTION
1	CHECK CONNECTOR CONNECTION • Check for connection of EGR valve and PCM. • **Is connection okay?**	Yes	Go to next step.
		No	SERVICE as necessary. RESET PCM to completely clear DTCs. ☞ After Repair Procedure COMPLETE OBD II Drive Mode. RERUN OBD Test.
2	CHECK EGR VALVE POWER CIRCUIT VOLTAGE • Key off. • Disconnect EGR valve. • Key on, engine off. • Measure voltage between power circuit at EGR valve harness connector terminal C or D, and battery negative post. • **Is each voltage greater than 10.5 volts?**	Yes	Go to next step.
		No	SERVICE open power circuit. RECONNECT all components. RESET PCM to completely clear DTCs. ☞ After Repair Procedure COMPLETE OBD II Drive Mode. RERUN OBD Test.

3	CHECK EGR VALVE CONTROL SIGNAL CIRCUIT SHORT TO GROUND
	• Key off.
	• EGR valve disconnected.
	• Disconnect PCM. Inspect for damaged or pushed out pins, corrosion, loose wires, etc. Service as necessary.
	• Measure resistance between following terminals EGR valve connector and battery negative post.
	  • Test Pin 68
	  • Test Pin 72
	  • Test Pin 46
	  • Test Pin 56
	• **Is each resistance greater than 10,000 ohms?**
		Yes	EGR valve control signal harness circuits to PCM is okay.
			Go to next step.

		No	SERVICE short circuit between EGR valve control signal circuit. RESET PCM to completely clear DTCs. ☞ After Repair Procedure COMPLETE OBD II Drive Mode. RERUN OBD Test.

4	CHECK CONTINUITY EGR VALVE CONTROL SIGNAL CIRCUIT OPEN
	• Key off.
	• EGR valve disconnected.
	• Breakout box installed.
	• PCM disconnected.
	• Measure resistance between appropriate Test Pin at the breakout box and EGR valve terminal at vehicle harness connector.
	  • EGR valve terminal E – Test Pin 68
	  • EGR valve terminal A – Test Pin 72
	  • EGR valve terminal B – Test Pin 46
	  • EGR valve terminal F – Test Pin 56
	• **Is each resistance less than 5.0 ohms?**
		Yes	EGR valve control signal harness circuits to PCM is okay.
			SERVICE EGR valve
			☞ 01–16A EGR VALVE INSPECTION [FS]
			RESET PCM to completely clear DTCs.
			☞ After Repair Procedure
			COMPLETE OBD II Drive Mode.
			RERUN OBD test.

		No	Service open in EGR valve control signal circuit harness. RECONNECT all components. RESET PCM to completely clear DTCs. ☞ After Repair Procedure COMPLETE the OBD II Drive Mode. RERUN OBD Test.

DTC P1410	EGR boost solenoid valve stuck
DESCRIPTION	• Deference of EGR boost pressure and atmospheric pressure is out of self-test range

[Possible Cause]

- Connection of hose between intake manifold and EGR boost solenoid is not properly
- Connection of hose between EGR boost sensor and EGR boost solenoid is not properly
- Air leaks after MAF sensor
- Open or short to EGR boost solenoid circuit
- Damaged EGR boost solenoid valve
- Damaged EGR boost sensor
- Damaged PCM

STEP	INSPECTION		ACTION
1	VISUAL CHECKS • Check intake air system for leaks, obstructions and damage. • Check air cleaner element, air cleaner housing for blockage. • Verify integrity of positive crankcase ventilation (PCV) system. • Check for vacuum leaks. • Check connection of hose between EGR boost solenoid valve and intake manifold. • Check connection of hose between EGR boost solenoid valve and EGR boost sensor. • **Are any of above concerns present?**	Yes	SERVICE as necessary. RESET PCM to completely clear DTCs. ☞ After Repair Procedure COMPLETE OBD II Drive Mode. RERUN OBD Test.
		No	Go to next step.
2	PERFORM CONTINUOUS MEMORY SELF-TEST • Key off. • Connect NGS tester. • Perform continuous memory self-test. • **Are any continuous memory DTCs displayed?**	Yes	Go to appropriate DTC test.
		No	Go to next step.
3	PERFORM KOEO SELF-TEST • Key off. • NGS tester connected. • Key on, engine off. • Perform KOEO self-test. • **Are any KOEO DTCs displayed?**	Yes	Go to appropriate DTC test.
		No	Go to next step.
4	PERFORM KOER SELF-TEST • Key off. • NGS tester connected. • Key on, engine running. • Perform KOER self-test. • **Are any KOER DTCs displayed?**	Yes	Go to appropriate DTC test.
		No	Go to next step.
5	CHECK FOR POWER CIRCUIT TO EGR BOOST SOLENOID VALVE • Disconnect EGR boost solenoid valve connector. • Key on, engine off. • Measure voltage between power circuit at EGR boost solenoid valve vehicle harness connector and chassis ground. • **Is voltage greater than 10.5 volts?**	Yes	Go to next step.
		No	SERVICE open in POWER circuit between ignition switch and EGR boost solenoid valve. RESET PCM to completely clear DTCs. ☞ After Repair Procedure COMPLETE OBD II Drive Mode. RERUN OBD Test.
6	CHECK EGR BOOST SOLENOID VALVE • Key off. • EGR boost solenoid valve disconnected. • Measure resistance between terminals A and B at EGR boost sensor solenoid valve. • **Is resistance less than 5.0 ohms?**	Yes	Go to next step.
		No	REPLACE EGR boost solenoid valve. RECONNECT all components. RESET PCM to completely clear DTCs. ☞ After Repair Procedure COMPLETE OBD II Drive Mode. RERUN OBD Test.

STEP	INSPECTION		ACTION
7	CHECK EGR BOOST SOLENOID VALVE CIRCUIT FOR SHORT TO POWER • Key off. • EGR boost solenoid valve disconnected. • Disconnect PCM. Inspect for damaged or pushed out pins, corrosion, loose wires, etc. Service as necessary. • Install breakout box. Leave PCM disconnected. • Key on, engine off. • Measure voltage between Test Pin 98 at breakout box and chassis ground. • **Is voltage less than 1.0 volts?**	Yes	Go to next step.
		No	SERVICE short to power. REMOVE breakout box. RECONNECT all components. RESET PCM to completely clear DTCs. ☞ After Repair Procedure COMPLETE OBD II Drive Mode. RERUN OBD Test.
8	CHECK EGR BOOST SOLENOID VALVE CIRCUIT SHORT TO GROUND • Key off. • Disconnect NGS tester from DLC. • Breakout box installed. PCM disconnected. • EGR boost solenoid valve disconnected. • Measure resistance between Test Pin 98 and Test Pin 51 or 103 and 91 at breakout box. • **Is resistance greater than 10,000 ohms?**	Yes	Go to next step.
		No	SERVICE short circuit. REMOVE breakout box. RECONNECT all components. RESET PCM to completely clear DTCs. ☞ After Repair Procedure COMPLETE OBD II Drive Mode. RERUN OBD Test.
9	CHECK EGR BOOST SOLENOID VALVE CIRCUIT CONTINUITY • Key off. • Breakout box installed. PCM disconnected. • EGR boost solenoid disconnected. • Measure resistance between EGR boost solenoid valve circuit at EGR boost solenoid valve connector Test Pin 98 at breakout box. • **Is resistance less than 5.0 ohms?**	Yes	Go to next step.
		No	SERVICE open circuit. REMOVE breakout box. RECONNECT all components. RESET PCM to completely clear DTCs. ☞ After Repair Procedure COMPLETE OBD II Drive Mode. RERUN OBD Test.
10	CHECK EGR BOOST SENSOR CONSTANT VOLTAGE • Key on, engine off. • EGR boost sensor disconnected. • Measure voltage between constant voltage and ground circuits at EGR boost sensor harness connector. • Key off. • **Is voltage between 4.0 and 6.0 volts?**	Yes	Go to next step.
		No	REPAIR open in constant voltage circuit.
11	CHECK CONTINUITY OF EGR BOOST SENSOR HARNESS CIRCUIT • Key off. • EGR boost sensor disconnected. • Disconnect PCM. Inspect for damaged pushed out pins, corrosion, loose wires, etc. Service as necessary. • Install breakout box. Leave PCM disconnected. • Measure resistance between EGR boost sensor signal circuit at EGR boost solenoid harness connector and Test Pin 34 at breakout box. • Measure resistance between EGR boost sensor ground circuit at EGR boost sensor harness connector and Test Pin 91 at breakout box. • **Is each resistance less than 5.0 ohms?**	Yes	Go to next step.
		No	SERVICE open in appropriate circuit. RESET PCM to completely clear DTCs. ☞ After Repair Procedure COMPLETE OBD II Drive Mode. RERUN OBD Test. Confirm repair by performing by EGR portion of OBD II Drive Mode to check for DTCs.

STEP	INSPECTION		ACTION
12	CHECK EGR BOOST SENSOR SIGNAL CIRCUIT FOR SHORT TO GROUND AND POWER • Key off. • EGR boost sensor disconnected. • Breakout box installed. PCM disconnected. • Measure resistance between Test Pin 34 and test Pin 91, 51 and 103 at breakout box. • Measure resistance between Test pin 34 and Test Pin 71, 90 and 97 at breakout box. • **Is resistance greater than 10,000 ohms?**	Yes	Go to next step.
		No	SERVICE short in EGR boost sensor signal circuit. REMOVE breakout box. RECONNECT all components. RESET PCM to completely clear DTCs. ☞ After Repair Procedure COMPLETE OBD II Drive Mode. RERUN OBD Test. Confirm repair by performing by EGR portion of OBD II Drive Mode to check for DTCs.
13	CHECK EGR VALVE POWER CIRCUIT VOLTAGE • Key off. • Disconnect EGR valve. • Key on, engine off. • Measure voltage between power circuit at EGR valve harness connector C or D and battery negative post. • **Is each voltage greater than 10.5 volts?**	Yes	Power harness circuit from main relay to EGR is okay. Go to next step.
		No	SERVICE open power circuit. Reconnect all components. RESET PCM to completely clear DTCs. ☞ After Repair Procedure COMPLETE OBD II Drive Mode. RERUN OBD Test. Confirm repair by performing by EGR portion of OBD II Drive Mode to check for DTCs.

14	CHECK EGR CONTROL SIGNAL CIRCUIT SHORT TO GROUND
	• Key off.
	• EGR valve disconnected.
	• Disconnect PCM.
	• Measure resistance between following terminals EGR valve connector and battery negative post.
	  • Test Pin 68
	  • Test Pin 72
	  • Test Pin 46
	  • Test Pin 56
	• **Is each resistance greater than 10,000 ohms?**
		Yes	EGR valve control signal harness circuit to PCM is okay.
			Go to next step.

		No	SERVICE short circuit between EGR valve control signal circuit. RESET PCM to completely clear DTCs. ☞ After Repair Procedure COMPLETE OBD II Drive Mode. RERUN OBD Test. Confirm repair by performing by EGR portion of OBD II Drive Mode to check for DTCs.

15	CHECK CONTINUITY EGR VALVE CONTROL SIGNAL CIRCUIT OPEN
	• Key off.
	• EGR valve disconnected.
	• Breakout box installed. PCM disconnected.
	• Measure voltage between appropriate Test Pin at breakout box and EGR valve terminal at harness connector.
	  • EGR valve terminal E – Test Pin 68
	  • EGR valve terminal A – Test Pin 72
	  • EGR valve terminal B – Test Pin 46
	  • EGR valve terminal F – Test Pin 56
	• **Is each resistance less than 5.0 ohms?**
		Yes	EGR valve control signal circuits are okay.
			Service EGR valve.
			☞ 01–16 EGR VALVE INSPECTION

		No	SERVICE open in EGR valve control signal circuit harness. RECONNECT all components. RESET PCM to completely clear DTCs. ☞ After Repair Procedure COMPLETE OBD II Drive Mode. RERUN OBD Test. Confirm repair by performing by EGR portion of OBD II Drive Mode to check for DTCs.

DTC P1450	Evaporative emission control system unable to bleed up fuel tank vacuum
DESCRIPTION	• DTC P1450 indicates that self-test has detected Evaporative Emission Control System is unable to bleed up fuel tank vacuum

[Possible Cause]
- Contaminated filter on the purge solenoid valve
- Damaged the purge solenoid valve
- Constant voltage circuit open between fuel tank pressure (FTP) sensor and PCM
- Damaged FTP sensor

STEP	INSPECTION		ACTION
1	CHECK PURGE SOLENOID VALVE • Key off. • Remove vacuum line from the input vacuum port to intake manifold on control vacuum solenoid part of purge solenoid valve. • Apply 33 kPa {0.33 kgf/cm^2, 210 inHg} of vacuum with a hand-held vacuum pump to the open port on solenoid part of the purge solenoid valve. • **Does vacuum to the solenoid on purge solenoid valve release rapidly?**	Yes	REMOVE vacuum pump. RECONNECT all components. Go to next step.
		No	SERVICE purge solenoid valve. If unable to repair filter, REPLACE damaged purge solenoid valve. REMOVE vacuum pump. RECONNECT all components. RESET PCM to completely clear DTCs. ☞ After Repair Procedure COMPLETE OBD II Drive Mode. RERUN OBD Test.
2	CHECK PURGE SOLENOID VALVE RESISTANCE • Key off. • Purge solenoid valve disconnected. • Measure resistance between purge solenoid valve and power circuit on purge solenoid valve. • **Is resistance between 30 and 36 ohms?**	Yes	Go to next step.
		No	REPLACE damaged purge solenoid valve. RESET PCM to completely clear DTCs. ☞ After Repair Procedure COMPLETE OBD II Drive Mode. RERUN OBD Test.
3	CHECK PURGE SOLENOID VALVE CIRCUIT FOR SHORT TO GROUND CIRCUIT • Key off. • Purge solenoid valve disconnected. • Breakout box installed. • PCM disconnected. • Disconnect NGS tester from DLC. • Measure resistance between Test Pin 67 and Test Pins 24 and 103 at breakout box. • **Is each resistance greater than 10,000 ohms?**	Yes	Go to next step.
		No	SERVICE harness short between purge solenoid valve and ground circuit. REMOVE breakout box. RECONNECT all components. RESET PCM to completely clear DTCs. ☞ After Repair Procedure COMPLETE OBD II Drive Mode. RERUN OBD Test.
4	VISUAL CHECK OF CONSTANT VOLTAGE CONNECTIONS AT FUEL TANK PRESSURE SENSOR AND PCM • Key off. • Observe constant voltage circuit at both FTP sensor and PCM connectors. • **Does constant voltage circuit appear to be connected at both FTP sensor and PCM?**	Yes	Go to next step.
		No	SERVICE as necessary. RESET PCM to completely clear DTCs. ☞ After Repair Procedure COMPLETE OBD II Drive Mode. RERUN OBD Test.
5	CHECK RESISTANCE OF CONSTANT VOLTAGE CIRCUIT AT FTP SENSOR • Key off. • Disconnect FTP sensor. • Disconnect PCM. Inspect for damaged or pushed out pins, corrosion and loose wires. Service as necessary. • Install breakout box. Leave PCM disconnected. • Measure resistance between Test Pin 90 at breakout box and constant voltage circuit at FTP sensor connector. • **Is resistance less than 5.0 ohms?**	Yes	Constant voltage is open in FTP sensor. REPLACE damaged FTP sensor. REMOVE breakout box. RECONNECT all components. RESET PCM to completely clear DTCs. ☞ After Repair Procedure COMPLETE OBD II Drive Mode. RERUN OBD Test.
		No	SERVICE open in constant voltage harness to FTP sensor. REMOVE breakout box. RECONNECT all components. RESET PCM to completely clear DTCs. ☞ After Repair Procedure COMPLETE OBD II Drive Mode. RERUN OBD Test.

DTC P1451	Canister drain cut valve (CDCV) malfunction
DESCRIPTION	• DTC P1451 indicates that self-test has detected a Canister Drain Cut Valve (CDCV) circuit failure.

[Possible Cause]

- Damaged fuel tank pressure (FTP) sensor
- Kinks or blockage in fuel vapor hose/tube between fuel tank, purge solenoid valve and fuel vapor storage canister(s) or between fuel vapor storage canister(s), CDCV and atmosphere
- Power circuit open
- CDCV circuit open
- CDCV circuit shorted to ground circuit
- CDCV circuit shorted to power circuit
- Damaged CDCV
- Damaged PCM

STEP	INSPECTION		ACTION
1	CHECK FOR POWER CIRCUIT TO CDCV • Key off. • Disconnect CDCV connector. • Key on, engine off. • Measure voltage between power circuit at CDCV connector and battery ground. • **Is voltage greater than 10.5 volts?**	Yes	Go to next step.
		No	SERVICE open in power circuit harness to CDCV. RECONNECT all components. RESET PCM to completely clear DTCs. ☞ After Repair Procedure COMPLETE OBD II Drive Mode. RERUN OBD Test.
2	CHECK CDCV RESISTANCE • Key off. • Disconnect CDCV connector. • Measure the resistance between CDCV and power circuit on CDCV. • **Is the resistance between 45 and 65 ohms?**	Yes	Go to next step.
		No	REPLACE damaged CDCV. RECONNECT CDCV. RECORD and REMEMBER this pinpoint test step. Go to step 8. Then RETURN to the pinpoint test step that directed you here. RESET PCM to completely clear DTCs. ☞ After Repair Procedure COMPLETE OBD II Drive Mode. RERUN OBD Test.
3	CHECK RESISTANCE OF CDCV CIRCUIT • Key off. • Disconnect CDCV and PCM. Inspect for damaged or pushed out pins, corrosion and loose wires. Service as necessary. • Install breakout box. Leave PCM disconnected. • Measure resistance between Test Pin 18 at breakout box and CDCV circuit at the CDCV connector. • **Is resistance less than 5.0 ohms?**	Yes	Go to next step.
		No	SERVICE open in CDCV harness. REMOVE breakout box. RECONNECT all components. RESET PCM to completely clear DTCs. ☞ After Repair Procedure COMPLETE OBD II Drive Mode. RERUN OBD Test.
4	CHECK CDCV CIRCUIT FOR SHORT TO GROUND CIRCUIT • Key off. • CDCV disconnected. • Breakout box installed. • PCM disconnected. • Disconnected NGS tester from DLC. • Measure resistance between Test Pin 18 and Test Pins 51 and 103 at breakout box. • **Is resistance greater than 10,000 ohms?**	Yes	RECONNECT NGS tester. Go to next step.
		No	SERVICE harness short between CDCV and GROUND CIRCUIT. REMOVE breakout box. RECONNECT all components. RESET PCM to completely clear DTCs. ☞ After Repair Procedure COMPLETE OBD II Drive Mode. RERUN OBD Test.
5	CHECK CDCV SIGNAL CIRCUIT FOR SHORT TO POWER CIRCUIT • Key off. • CDCV disconnected. • Breakout box installed. • PCM disconnected. • Key on, engine off. • Measure voltage between Test Pin 18 at breakout box and chassis ground. • **Is voltage less than 1.0 volts?**	Yes	Go to next step.
		No	SERVICE harness short between CDCV and power circuit (power circuit, constant voltage or chassis ground). RECONNECT all components. RESET PCM to completely clear DTCs. ☞ After Repair Procedure COMPLETE OBD II Drive Mode. RERUN OBD Test.

STEP	INSPECTION		ACTION
6	CHECK CDCV SIGNAL FROM PCM • Key off. • Breakout box installed. • Reconnect PCM to breakout box. • Reconnect CDCV connector. • Connect digital multimeter between Test Pin 18 and Test Pin 51 or 103 at breakout box. • Start engine. • Observe voltage on digital multimeter. • **Is voltage between 10.0 and 14.0 volts?**	Yes	REPLACE damaged CDCV. REMOVE breakout box. RECONNECT all components. RECORD and REMEMBER this pinpoint test step. Go to next step. Then RETURN to the pinpoint test step that directed you here. RESET PCM to completely clear DTCs. ☞ After Repair Procedure COMPLETE OBD II Drive Mode. RERUN OBD Test.
		No	REPLACE PCM. REMOVE breakout box. RECONNECT all components. RERUN OBD Test.
7	EVAPORATIVE SYSTEM RE-CHECK • RESET PCM to completely clear DTCs. ☞ After Repair Procedure • COMPLETE OBD II Drive Mode. • **Is MIL illuminated?**	Yes	ISOLATE pressure leak in evaporative emission system (ie, vacuum/fuel vapor hose connections, cracked/split hoses, damaged components.) SERVICE as necessary. VERIFY symptom no longer exists. RESET PCM to completely clear DTCs. ☞ After Repair Procedure COMPLETE OBD II Drive Mode. RERUN OBD Test.
		No	RETURN to the action to take column of pinpoint test step that directed you here.

KOEO, KOER DTC	**P1460**	**Wide open throttle air conditioning cutoff circuit malfunction**
DESCRIPTION		• KOEO KOER DTC P1460 indicates an A/C relay primary circuit fault

[Possible Cause]
- Open or shorted circuit
- Damaged A/C relay
- Damaged PCM

STEP	INSPECTION		ACTION
1	CHECK FOR IGNITION SWITCH (IG1) VOLTAGE TO A/C RELAY **Note** • Verify A/C and defrost were off during KOEO and KOER self-tests. • Key off. • Disconnect A/C relay. • Key on. • Measure voltage between ignition switch (IG1) circuit at A/C relay vehicle harness connector and chassis ground. • **Is voltage greater than 10.5 volts?**	Yes	Go to next step.
		No	VERIFY condition of related fuses. If okay, SERVICE open circuit. RECONNECT all components. RERUN OBD Test.

2	CHECK A/C RELAY
	• Key off.
	• A/C relay disconnected.
	• Check A/C relay coil resistance:
	  • Measure resistance A/C relay coil circuit and ignition switch (IG1) pin at A/C relay.
	  • Resistance should be between 50 and 100 ohms.
	• Check A/C relay for internal shorts:
	  • Measure resistance between A/C relay coil circuit pin and following pins at A/C relay: B+, power-to-clutch, ground.
	  • Resistances should be greater than 10,000 ohms.
	• **Are all resistance checks okay?**
		Yes	Go to next step.

		No	REPLACE A/C relay. RECONNECT all components. RERUN OBD Test.

STEP	INSPECTION		ACTION
3	CHECK A/C RELAY CIRCUIT FOR SHORT TO POWER • Key off. • A/C relay disconnected. • Disconnect PCM. Inspect for damaged or pushed out pins, corrosion, loose wire, etc. Service as necessary. • Install breakout box. Leave PCM disconnected. • Key on, engine off. • Measure voltage between Test Pin 69 at breakout box and chassis ground. • **Is voltage less than 1.0 volt?**	Yes	Go to next step.
		No	SERVICE short to power. REMOVE breakout box. RECONNECT all components. START engine and TURN A/C on. WAIT 15 seconds. TURN A/C and key off. RERUN OBD Test.
4	CHECK A/C RELAY CIRCUIT FOR SHORT TO CHASISS GROUND • Key off. • A/C relay disconnected. • Disconnect NGS tester from DLC. • Breakout box installed. • PCM disconnected. • Measure resistance between Test Pin 69 at breakout box and chassis ground. • **Is resistance greater than 10,000 ohms?**	Yes	Go to next step.
		No	SERVICE short to ground. REMOVE breakout box. RECONNECT all components. START engine and TURN A/C on. WAIT 15 seconds. TURN A/C and key off. RERUN OBD Test.
5	CHECK A/C RELAY CIRCUIT CONTINUITY • Key off. • A/C relay disconnected. • Breakout box installed. • PCM disconnected. • Measure resistance between Test Pin 69 at breakout box and A/C relay circuit at A/C relay connector. • **Is resistance less than 5.0 ohms?**	Yes	REPLACE PCM. REMOVE breakout box. RECONNECT all components. START engine and TURN A/C on. WAIT 15 seconds. TURN A/C off. RERUN OBD Test.
		No	SERVICE open circuit. REMOVE breakout box. RECONNECT all components. START engine and TURN A/C on. WAIT 15 seconds. TURN A/C off. RERUN OBD Test.

CONTINUOUS DTC P1460	Wide open throttle air conditioning cutoff circuit malfunction
DESCRIPTION	• Continuous Memory DTC P1460 indicates A/C relay primary circuit fault has occured during vehicle operation

[Possible Cause]
- Open in ignition switch to A/C relay coil circuit

STEP	INSPECTION		ACTION

1	CHECK A/C RELAY COIL CIRCUIT FOR SHORT TO GROUND
	• Key off.
	• NGS tester connected.
	• Disconnect A/C low pressure switch.
	• Install jumper wire in A/C low pressure switch vehicle harness connector. (to complete circuit)
	• Key on, engine off.
	• A/C switch ON.
	• Check A/C relay coil circuit short to ground while performing following:
	  • Shake, wiggle, bend A/C coil circuit between PCM terminal 69 and A/C relay.
	  • Lightly tap on A/C relay (to simulate road shock).
	• **Is fault indicated?**
		Yes	ISOLATE fault and SERVICE as necessary.
			REMOVE jumper wire.
			RECONNECT all components.
			RESET PCM completely clear DTCs.
			☞ After Repair Procedure
			START engine.
			TURN A/C to ON.
			WAIT 15 seconds.
			A/C off.
			Key off.
			RERUN OBD Test.

		No	Go to next step.

2	CHECK A/C RELAY COIL CIRCUIT FOR OPEN TO POWER
	• Key on, engine off.
	• Jumper wire installed in A/C low pressure switch.
	• A/C ON.
	• NGS tester connected.
	• Access Output Test Mode on NGS tester.
	• Turn output ON.
	• Check A/C relay coil circuit for open in power circuit or ignition switch circuit performing following:
	  • Shake, wiggle, bend A/C coil circuit between PCM terminal 69 and A/C relay.
	  • Shake, wiggle, bend power circuit or ignition switch circuit to A/C relay.
	  • Lightly tap on A/C relay (to simulate road shock).
	• Key off, A/C off.
	• **Is fault indicated?**
		Yes	ISOLATE fault and SERVICE as necessary.
			REMOVE jumper wire.
			RECONNECT all components.
			RESET PCM completely clear DTCs.
			☞ After Repair Procedure
			START engine.
			TURN A/C to ON.
			WAIT 15 seconds.
			A/C off.
			Key off.
			RERUN OBD Test.

		No	Go to ENGINE SYMPTOM TROUBLESHOOTING No.27.

DTC P1464	Air conditioner (A/C) demand out of self-test range		
DESCRIPTION	• DTC P1464 indicates A/C switch did not turn off during KOER or KOEO self-test		
[Possible Cause] • A/C switch turned on during self-test • Short to ground in A/C relay circuit			
STEP	**INSPECTION**		**ACTION**
1	CHECK FOR KOEO AND KOER SELF-TEST • **Was A/C switch off during KOEO and KOER self-tests?**	Yes	Go to next step.
		No	RERUN KOEO and/or KOER self-test with A/C switch off.
2	CHECK DTC PRESENT • Active Continuous Memory self-test. • **Are any DTCs present?**	Yes	Go to appropriate DTC chart.
		No	Go to next step.

3	CHECK FOR A/C RELAY CIRCUIT
	• Breakout box installed.
	• Key on, engine running.
	• Fan switch in 1st speed.
	• Measure voltage between Test Pin 69 at breakout box and chassis ground.
	  • A/C switch ON: 0 V
	  • A/C switch OFF: 12 V
	• **Are voltages correct?**
		Yes	CHECK A/C relay operation.
			If okay, intermittent poor connection or component malfunction. (REPAIR or REPLACE as necessary).
			Go to SYMPTOM TROUBLESHOOTING No.27.
			If okay, REPLACE PCM.

		No	Go to next step.

4	CHECK FOR A/C SWITCH CIRCUIT
	• Measure voltage between Test Pin 41 at breakout box and chassis ground.
	  • A/C switch ON: 0 V
	  • A/C switch OFF: 12 V
	• **Are voltages correct?**
		Yes	Go to next step.

		No	Go to step 6.
5	CHECK CONTINUITY OF A/C RELAY CIRCUIT • Key off. • Disconnect A/C relay and breakout box from PCM (leave breakout box connected to PCM vehicle harness connector). • Measure resistance between Test Pin 69 at breakout box and chassis ground. • **Is resistance greater than 10,000 ohms?**	Yes	Intermittent poor connection or component malfunction between A/C relay and PCM circuit. (REPAIR or REPLACE as necessary).
		No	SERVICE short circuit between A/C relay and PCM. REMOVE breakout box. RECONNECT all components. RERUN OBD Test.
6	CHECK A/C AMPLIFIER • Perform A/C amplifier inspection. • **Is A/C amplifier okay?**	Yes	Go to next step.
		No	REPLACE A/C Amplifier.
7	CHECK CONTINUITY OF A/C SWITCH CIRCUIT • Key off. • Disconnect A/C amplifier and breakout box from PCM (leave breakout box connected to PCM vehicle harness connector.) • Measure resistance between Test Pin 41 at the breakout box and chassis ground. • **Is resistance greater than 10,000 ohms?**	Yes	Check heater control unit operation. If voltage incorrect, REPLACE heater control unit. If voltage correct, REPLACE PCM.
		No	SERVICE short circuit between A/C amplifier and PCM. REMOVE breakout box. RECONNECT all components. RERUN OBD Test.

KOEO, KOER P1474 DTC P1479	**Cooling fan control primary circuit malfunction** **Condenser fan control primary circuit malfunction**
DESCRIPTION	• DTC P1474 indicates cooling fan control primary circuit failure. • DTC P1479 indicates condenser fan control primary circuit failure.

[Possible Cause]
- Open or shorted cooling fan control signal or condenser fan control signal circuit
- Open VPWR circuit to fan relay
- Damaged fan relay (cooling fan or condenser fan)
- Damaged PCM

STEP	INSPECTION		ACTION

1	CHECK FOR POWER CIRCUIT TO APPLICABLE FAN RELAY
	
	Note
	• During diagnosis, use below to determine the correct pin number, circuit and relay being tested.
	  • DTC P1474=PCM terminal 45
	  • DTC P1479=PCM terminal 17
	• Key off.
	• Disconnect appropriate fan relay.
	• Key on.
	• Measure voltage between power circuit at applicable fan control relay connector and battery negative post.
	• **Is voltage greater than 10.5 volts?**
		Yes	Go to next step.

		No	SERVICE open power circuit to applicable fan control relay. RECONNECT fan relay. RERUN OBD Test.
2	CHECK FOR COOLING FAN CONTROL SIGNAL OR CONDENSER FAN CONTROL SIGNAL CIRCUIT CYCLING • Key on, engine off. • Applicable fan relay disconnected. • NGS tester connected. • Access Output Test Mode. • Connect non-powered test lamp between power circuit and cooling fan control signal or condenser fan control signal circuit at applicable fan relay connector. • While observing test lamp, command appropriate cooling fan speed on and off. • **Does test lamp turn on and off when cooling fan output is commanded on and off?**	Yes	Key off. REPLACE appropriate fan relay. RERUN OBD Test.
		No	REPEAT test step to VERIFY results. If test lamp still does not turn on and off as expected, turn key off. REMOVE test lamp. Go to next step.
3	CHECK COOLING FAN CONTROL SIGNAL OR CONDENSER FAN CONTROL SIGNAL CIRCUIT FOR SHORT TO POWER • Key off. • Applicable fan control relay disconnected. • Disconnect PCM. Inspect for damaged or pushed out pins, corrosion and loose wires. Service as necessary. • Key on, engine off. • Measure voltage between cooling fan control signal or condenser fan control signal circuit at applicable fan control relay vehicle harness connector and battery negative post. • Key off. • **Was voltage less than 1.0 volt?**	Yes	Go to next step.
		No	SERVICE cooling fan control signal or condenser fan control signal circuit short to power. RECONNECT all components. RERUN OBD Test.

STEP	INSPECTION		ACTION
4	CHECK COOLING FAN CONTROL SIGNAL OR CONDENSER FAN CONTROL SIGNAL CIRCUIT FOR SHORT TO GROUND • Key off. • Disconnect NGS tester from DLC. • Appropriate fan relay disconnected. • PCM disconnected. • Install breakout box. Leave PCM disconnected. • Measure resistance between appropriate fan circuit Test Pin 45 (cooling fan control signal) or 17 (condenser fan control signal) and Test Pin 51, 103 and 91 at breakout box. • **Is each resistance greater than 10,000 ohms?**	Yes	Go to next step.
		No	SERVICE fan control circuit for short to ground. REMOVE breakout box. RECONNECT all components. RERUN OBD Test.
5	CHECK COOLING FAN CONTROL SIGNAL OR CONDENSER FAN CONTROL SIGNAL CIRCUIT RESISTANCE • Key off. • Appropriate fan control relay disconnected. • Breakout box installed. • PCM disconnected. • Measure resistance between appropriate fan control circuit Test Pin45 (cooling fan control signal) or 17 (condenser fan control signal) at breakout box and at appropriate fan relay vehicle harness connector. • **Is resistance less than 5.0 ohms?**	Yes	REPLACE PCM. REMOVE breakout box. RECONNECT all components. RERUN OBD test.
		No	SERVICE open cooling fan relay control or condenser fan relay control circuit. REMOVE breakout box. RECONNECT all components. RERUN OBD Test.

CONTINUOUS DTC P1474	Cooling fan control circuit malfunction
DESCRIPTION	• Continuous Memory DTC P1474 indicates cooling fan control circuit failure has occurred during vehicle operation

[Possible Cause]
- Open or short cooling fan control circuit
- Open power circuit cooling fan relay

STEP	INSPECTION		ACTION

1	CHECK COOLING FAN CONTROL CIRCUIT FOR OPEN OR SHORT CIRCUIT
	• Key off.
	• A/C off.
	• NGS tester connected.
	• Disconnect cooling fan connector. Inspect connector for damaged or pushed out pins, corrosion and loose wires. Service as necessary.
	• Connect non-power test lamp between cooling fan operational circuit and ground circuit at vehicle harness connector.
	• Key on, engine off.
	• Access Output Test Mode on NGS tester.
	• Command cooling fan on.
	• Observe test lamp for an indication of fault while performing following (lamp will turn off when fault detected, indicating open or short to power):
	  • Shake, wiggle, bend, cooling fan control circuit PCM 45 terminal and cooling fan relay.
	  • Shake, wiggle, bend, power circuit or ignition switch circuit to cooling fan relay.
	  • Lightly tap on cooling fan relay (to simulate road shock).
	• **Is fault indicated?**
		Yes	Key off.
			ISOLATE fault and SERVICE as necessary.
			RESET PCM to completely clear DTCs.
			☞ After Repair Procedure
			COMPLETE OBD II Drive Mode.
			RERUN OBD test.

		No	Go to next step.

2	CHECK COOLING FAN CONTROL CIRCUIT FOR SHORT TO GROUND
	• Key on, engine off.
	• Cooling fan disconnected. Test lamp installed.
	• NGS tester connected.
	• Command cooling fan off.
	• Observe test lamp for indication of fault while performing following (lamp will turn on when fault is indicated, indicating cooling fan control circuit short to ground):
	  • Shake, wiggle, bend, cooling fan control circuit between PCM and cooling fan relay.
	  • Lightly tap cooling fan relay (to simulate road shock).
	• **Is fault indicated?**
		Yes	ISOLATE fault and service as necessary.
			RESET PCM to completely clear DTCs.
			☞ After Repair Procedure
			COMPLETE OBD II Drive Mode.
			RERUN OBD Test.

		No	Go to ENGINE SYMPTOM TROUBLESHOOTING No. 27.

CONTINUOUS DTC P1479	Condenser fan control circuit malfunction
DESCRIPTION	• DTC P1479 indicates condenser fan control circuit failure has occurred during vehicle operation

[Possible Cause]
- Open or shorted condenser fan control circuit
- Open power circuit to condenser fan control

STEP	INSPECTION		ACTION

1	CONTINUOUS MEMORY DTC P1479: CHECK CONDENSER FAN CONTROL SIGNAL CIRCUIT FOR OPEN OR SHORT TO POWER
	• Key off.
	• Turn A/C off.
	• Inspect connectors for damaged or pushed out pins, corrosion, loose wires, etc. Service as necessary.
	• Connect non-powered test lamp between power to condenser fan control signal circuit and ground circuit at condenser fan vehicle harness connector.
	• Key on, engine off.
	• Access Output Test Mode.
	• Command condenser fan control on.
	• Observe test lamp for indication of fault while performing following (the test lamp will turn off when fault is detected indicating an open or short to power):
	  • Shake, wiggle and bend the condenser fan control signal circuit between PCM and condenser fan relay.
	  • Shake, wiggle and bend power circuit to condenser fan relay.
	  • Lightly tap on condenser fan relay to simulate road shock.
	• **Is fault indicated?**
		Yes	Key off. ISOLATE fault and SERVICE as necessary.
			RESET PCM to completely clear DTCs.
			☞ After Repair Procedure
			COMPLETE OBD II Drive Mode.
			RERUN OBD Test.

		No	Go to next step.

2	CHECK FOR CONDENSER FAN CONTROL SIGNAL CIRCUIT SHORT TO GROUND
	• Key on, engine off.
	• Condenser fan disconnected, test lamp installed.
	• NGS tester connected.
	• Command condenser fan off.
	• Observe test lamp for indication of a fault while performing following (lamp will turn on when a fault is detected, indicating an condenser fan control signal circuit short to ground):
	  • Shake, wiggle and bend condenser fan control circuit between PCM and condenser fan relay.
	  • Shake, wiggle and bend power circuit to condenser fan relay.
	  • Lightly tap on condenser fan relay to simulate road shock.
	• Key off.
	• **Is fault indicated?**
		Yes	Isolate fault and service as necessary.
			RESET PCM to completely clear DTCs.
			☞ After Repair Procedure
			COMPLETE OBD II Drive Mode.
			RERUN OBD Test.

		No	Unable to duplicate or identify fault at this time. Intermittent poor connection or component malfunction. (SERVICE or REPLACE as necessary). Go to ENGINE SYMPTOM TROUBLE SHOOTING No.27.

DTC P1487	EGR boost solenoid valve circuit malfunction
DESCRIPTION	• DTC P1487 indicates EGR boost solenoid valve circuit malfunction.

[Possible Cause]
- Damaged EGR boost solenoid valve
- Open or shorted circuit
- Damaged PCM

STEP	INSPECTION		ACTION
1	CHECK FOR POWER TO EGR BOOST SOLENOID VALVE • Disconnect EGR boost solenoid valve connector. • Key on, engine off. • Measure voltage between power circuit at solenoid valve connector and chassis ground. • **Is voltage greater than 10.5 volts?**	Yes	Go to next step.
		No	SERVICE open in EGR boost solenoid valve power circuit between ignition switch and EGR boost solenoid valve. RERUN OBD Test.
2	CHECK EGR BOOST SOLENOID VALVE • Key off. • EGR boost solenoid valve disconnected. • Measure resistance of terminals EGR boost solenoid valve. • **Is resistance less than 5.0 ohms?**	Yes	Go to next step.
		No	REPLACE EGR boost solenoid valve. RERUN OBD Test.
3	CHECK EGR BOOST SOLENOID VALVE CIRCUIT FOR SHORT TO POWER • Key off. • EGR boost solenoid valve disconnected. • Disconnect PCM. Inspect for damaged or pushed out pins, corrosion, loose wires, etc. Repair as necessary. • Install breakout box. Leave PCM disconnected. • Key on, engine off. • Measure voltage between Test Pin 98 at breakout box and chassis ground. • **Is voltage less than 1.0 volts?**	Yes	Go to next step.
		No	SERVICE short to power. REMOVE breakout box. RECONNECT all components. RERUN OBD Test.
4	CHECK EGR BOOST SOLENOID VALVE CIRCUIT FOR SHORT TO GROUND • Key off. • Disconnect NGS tester from DLC. • Breakout box installed. Leave PCM disconnected. • EGR boost solenoid valve disconnected. • Measure resistance between Test Pin 98 and Test Pin 51 or 103 and 91 at breakout box. • **Is resistance greater than 10,000 ohms?**	Yes	Go to next step.
		No	SERVICE short circuit. REMOVE breakout box. RECONNECT all components. RERUN OBD Test.
5	CHECK EGR BOOST SOLENOID VALVE CIRCUIT CONTINUITY • Key off. • Breakout box installed. • PCM disconnected. • EGR boost solenoid valve disconnected. • Measure resistance between EGR boost solenoid connector signal terminal and Test Pin 98 at breakout box. • **Is resistance less than 5.0 ohms?**	Yes	REPLACE PCM. RECONNECT all components. RERUN OBD Test.
		No	SERVICE open circuit. REMOVE breakout box. RECONNECT all components. RERUN OBD Test.

DTC P1501	Vehicle speed sensor (VSS) input signal out of self-test range
DESCRIPTION	• DTC P1501 indicates VSS input signal is out of self-test range. **Note** • When PCM detects a VSS input signal any time during KOER testing, DTC P1501 will be set and testing will abort

[Possible Cause]
- Intermittent VSS input signal from external sources such as ignition wires or charging circuit

STEP	INSPECTION		ACTION
1	CHECK VSS PID FOR INPUT SIGNAL • Start engine and idle in neutral. • Access VSS PID and observe for vehicle speed input to PCM. • Increase engine speed, no higher than 2,000 rpm, several times while observing VSS PID. • **Is reading on VSS PID less than 5 km/h {3 mph}?**	Yes	Unable to dupricate or identify fault at this time. RESET PCM to completely clear DTCs. ☞ After Repair Procedure COMPLETE OBD II Drive Mode. RERUN OBD Test. If DTC P1501 still exists. Intermittent poor connection or component malfunction (REPAIR or REPLACE as necessary).
		No	Go to next step.

2	CHECK VSS HARNESS ROUTING
	• Check VSS harness routing
	  • Verify harness is not routed adjacent to high current wires (i.e, ignition wires or generator wiring).
	  • Verify VSS harness is shielded and grounded, if applicable.
	  • Check continuity of VSS harness.
	• **Are any problems evident?**
		Yes	SERVICE as necessary.
			RESET PCM to completely clear DTCs.
			☞ After Repair Procedure
			COMPLETE OBD II Drive Mode.

		No	Unable to duplicate or identify fault at this time. Intermittent poor connection or component malfunction (REPAIR or REPLACE as necessary).

DTC P1506	Idle air control (IAC) system overpseed error
DESCRIPTION	• DTC P1506 indicates self-test has detected an IAC valve over speed error

[Possible Cause]
- IAC valve circuit short to ground
- IAC valve stuck open
- Vacuum leak
- Damaged IAC valve
- Damaged throttle body
- Damaged PCM

STEP	INSPECTION		ACTION

1	CHECK FOR VACUUM LEAKS
	• Key on, engine running.
	• With engine at idle, listen for vacuum leaks.
	• Inspect entire air inlet system from Mass Air Flow (MAF) sensor to the intake manifold for damage or leaks:
	  • Cracked or punctured inlet air tube
	  • Loose air inlet tube at air cleaner housing or throttle body
	  • IAC valve assembly or gasket seal
	  • Intake manifold assembly or gasket seal
	  • EGR valve gasket seal
	  • Vacuum supply connectors and hose
	  • Positive crankcase ventilation (PCV) valve connectors and hose
	• **Are any leaks detected in above areas?**
		Yes	SERVICE as necessary.
			RECONNECT all components.
			RESET PCM to completely clear DTCs.
			☞ After Repair Procedure
			COMPLETE OBD II Drive Mode.
			RERUN OBD Test.

		No	Go to next step.
2	CHECK EVAP SYSTEM FOR A STUCK OPEN PURGE SOLENOID VALVE • Key off. • Disconnect hoses at purge solenoid valve. • Connect hand vacuum pump to port at solenoid valve. • Connect hand vacuum pump to either port if equipped with solenoid valve. • Apply –5.3 kPa {–406 mmHg, –16 inHg} of vacuum to purge solenoid valve. • **Does purge solenoid valve hold vacuum for 20 seconds?**	Yes	RECONNECT all components. Go to next step.
		No	REPLACE purge solenoid valve. RECONNECT all components. RESET PCM to completely clear DTCs. ☞ After Repair Procedure COMPLETE OBD II Drive Mode. RERUN OBD Test.

STEP	INSPECTION		ACTION
3	CHECK EVAP SYSTEM FOR STUCK OPEN VALVE • Key off. • Disconnect hoses at purge solenoid valve. • Connect vacuum pump to charcoal canister at purge solenoid valve. • Apply –5.3 kPa {–406 mmHg, –16 inHg} of vacuum to purge solenoid valve. • **Does the purge solenoid valve hold vacuum for 20 seconds?**	Yes	Go to next step.
		No	REPLACE purge solenoid valve. RECONNECT all components. RESET PCM to completely clear DTCs. ☞ After Repair Procedure COMPLETE OBD II Drive Mode. RERUN OBD Test.
4	CHECK IAC VALVE ASSEMBLY FOR PROPER FUNCTION • Key on, engine running. • Bring engine to normal operating temperature. • Transaxle in Park or Neutral. • Disconnect IAC valve assembly connector. • **Does RPM drop or engine stall?**	Yes	Go to next step.
		No	INSPECT throttle body for damage or defect. SERVICE as necessary. If okay, REPLACE IAC valve assembly. RESET PCM to completely clear DTCs. ☞ After Repair Procedure COMPLETE OBD II Drive Mode. RERUN OBD Test.
5	CHECK IAC CIRCUIT FOR SHORT TO GND • Key off. • Disconnect NGS tester from DLC. • IAC valve disconnected. • Disconnect PCM. Inspect for damaged or pushed out pins, corrosion, loose wires, etc. Service as necessary. • Measure resistance between Test Pin 83 and Test Pins 51 and 103 at breakout box. • **Is each resistance greater than 10,000 ohms?**	Yes	**For Fast Idle Symptom currently present:** REPLACE PCM. REMOVE breakout box. RECONNECT all components. RERUN OBD Test. **All others:** RECONNECT all components. Go to next step.
		No	SERVICE short circuit. RECONNECT all components. RERUN OBD Test.

6	CHECK IAC SYSTEM FOR INTERMITTENT OPEN OR SHORT
	• NGS tester connected.
	• Key on, engine running.
	• Access IAC and RPM PIDs.
	• With engine at normal operating temperature and all accessories off, IAC duty cycle should between 20% and 40%.
	• Observe IAC and RPM PIDs for indication of fault while performing following at idle:
	  • Lightly tap on IAC valve assembly and wiggle harness connector to simulate road shock
	  • Grasp vehicle harness closest to IAC valve assembly. Shake and bend small section of harness from IAC valve to dash panel and from dash panel to PCM
	• **Do IAC or RPM PIDs suddenly change indicating a fault?**
		Yes	ISOLATE fault and SERVICE as necessary.
			RECONNECT all components.
			RESET PCM to completely clear DTCs.
			☞ After Repair Procedure
			COMPLETE OBD II Drive Mode.

		No	**For idle quality, starting, or stalling symptoms currently present:** REPLACE IAC valve assembly. RECONNECT all components. RESET PCM to completely clear DTCs. ☞ After Repair Procedure COMPLETE OBD II Drive Mode. **Othres:** Unable to duplicate and/or identify fault at this time. Intermittent poor connection or component malfunction (REPAIR or REPLACE as necessary). Go to SYMPTOM TROUBLESHOOTING No.27.

DTC P1602	Immobilizer unit (IU) — PCM communication error
DESCRIPTION	• Command transmission from PCM to IU exceed limit • No response from IU

[Possible Cause]
- Defective wiring harness
- Defective IU
- Defective PCM
- Defective coil
- Defective key (transponder)

STEP	INSPECTION		ACTION
1	CHECK DTC PRESENT • RESET PCM to completely clear DTCs. ☞ After Repair Procedure • RERUN OBD test. • **Is same DTC present after cranking?**	Yes	Go to next step.
		No	Different DTC displayed: Go to appropriate DTC inspection. No DTC displayed: Troubleshooting is completed.
2	CHECK IMMOBILIZER SYSTEM DTC PRESENT • **Does security light indicate DTC 01?**	Yes	Go to DTC 01 inspection.
		No	Go to next step.
3	CHECK IMMOBILIZER SYSTEM DTC PRESENT • **Does security light indicate DTC 03?**	Yes	Go to DTC 03 inspection.
		No	Go to next step.
4	CHECK IMMOBILIZER SYSTEM DTC PRESENT • **Is other DTC present except P1624?**	Yes	Go to other DTC inspection.
		No	Go to next step.
5	CHECK WIRING HARNESS OPEN CIRCUIT • Check for wiring harness open circuit with IU connector disconnected: • IU(A) – PCM(5) • IU(C) – Ground • IU(J) – Battery • IU(L) – Ignition switch(black/white) • **Is there open circuit?**	Yes	Repair wiring harness.
		No	Go to next step.
6	CHECK WIRING HARNESS SHORT CIRCUIT • Check for wiring harness short circuit with IU connector disconnected: • IU(A) – PCM(5) • IU(F) – Coil(yellow) • IU(D) – Coil(green) • **Is there short circuit?**	Yes	Repair wiring harness.
		No	Replace IU and reprogram immobilizer system. ☞ 09–14 IMMOBILIZER SYSTEM REPROGRAMMING PROCEDURE, Immobilizer Replacement Go to next step.
7	CHECK DTC REPRESENT • **Does engine start after replacing IU and clearing DTC?**	Yes	Troubleshooting is completed.
		No	Replace PCM and reprogram immobilizer system. ☞ 09–14 IMMOBILIZER SYSTEM REPROGRAMMING PROCEDURE, PCM Replacement

DTC P1603 P1604	Code word unregistered in PCM Key ID numbers unregistered in PCM
DESCRIPTION	• Code word is not registered in PCM. (P1603) • Key ID numbers are not registered in PCM. (P1604)

[Possible Cause]
- Immobilizer system reprogram procedure was not performed correctly after replacing PCM.

STEP	INSPECTION		ACTION
1	CHECK DTC PRESENT • RESET PCM to completely clear DTCs. ☞ After Repair Procedure • RERUN OBD test. • **Is same DTC present after cranking?**	Yes	Perform reprogram procedure again. ☞ 09–14 IMMOBILIZER SYSTEM REPROGRAMMING PROCEDURE, PCM Replacement
		No	Troubleshooting is completed.

DTC P1621	Code word does not match after engine cranking
DESCRIPTION	• Code word stored in PCM and Immobilizer unit does not match.

[Possible Cause]
- Transformation of code word stored in immobilizer unit.
- Transformation of code word stored in PCM.

STEP	INSPECTION		ACTION
1	CHECK DTC PRESENT • RESET PCM to completely clear DTCs. ☞ After Repair Procedure • RERUN OBD test. • **Is same DTC present after cranking?**	Yes	Go to next step.
		No	Different DTC displayed: Go to appropriate DTC inspection. No DTC displayed: Troubleshooting is completed.
2	CHECK DTC P1602 PRESENT • **Does P1602 present?**	Yes	Go to DTC P1603 inspection.
		No	Replace IU and reprogram immobilizer system. ☞ 09–14 IMMOBILIZER SYSTEM REPROGRAMMING PROCEDURE, Immobilizer Replacement Go to next step.
3	CHECK DTC REPRESENT • **Does engine start after replacing IU and clearing DTC?**	Yes	Troubleshooting is completed.
		No	Replace PCM and reprogram immobilizer system. ☞ 09–14 IMMOBILIZER SYSTEM REPROGRAMMING PROCEDURE, PCM Replacement

DTC P1622	Key ID number does not match
DESCRIPTION	• ID number stored in immobilizer unit (IU) and PCM does not match. This DTC is indicated only after immobilizer unit is replaced and reprogramming system.

[Possible Cause]
- Unregistered key is used in step 3 of immobilizer system reprogram procedure (IU replacement).
- Transformation of key ID number stored in PCM.

STEP	INSPECTION		ACTION
1	CHECK DTC PRESENT • RESET PCM to completely clear DTCs. ☞ After Repair Procedure • RERUN OBD test. • **Is same DTC present after cranking?**	Yes	Go to next step.
		No	Different DTC displayed: Go to appropriate DTC inspection. No DTC displayed: Troubleshooting is completed.
2	CHECK ENGINE IS STARTING NORMALLY USING ANOTHER REGISTERED KEY • **Does engine start with another registered key?**	Yes	Previous key is defective. Discard it.
		No	Replace PCM and reprogram immobilizer system. ☞ 09–14 IMMOBILIZER SYSTEM REPROGRAMMING PROCEDURE, PCM Replacement

Note
- Do not use PCM on other vehicle for testing. Diagnostic trouble code No. P1622 will be displayed again.

DTC P1623	Code word or key ID number write/ read error in PCM
DESCRIPTION	• PCM internal EEPROM damaged

[Possible Cause]
- PCM internal EEPROM damaged

STEP	INSPECTION		ACTION
1	CHECK DTC PRESENT • RESET PCM to completely clear DTCs. ☞ After Repair Procedure • RERUN OBD test. • **Is same DTC present after cranking?**	Yes	Replace PCM and reprogram immobilizer system. ☞ 09–14 IMMOBILIZER SYSTEM REPROGRAMMING PROCEDURE, PCM Replacement
		No	Different DTC displayed: Go to appropriate DTC inspection. No DTC displayed: Troubleshooting is completed.

DTC P1624	Immobilizer system communication counter = 0
DESCRIPTION	• PCM detected immobilizer system malfunction more than three times.

[Possible Cause]
- Engine was attempted to start more than three times under malfunction.

STEP	INSPECTION		ACTION
1	CHECK DTC P1624 PRESENT • RESET PCM to completely clear DTCs. ☞ After Repair Procedure • RERUN OBD test. • **Is P1624 still present after cranking?**	Yes	Go to next step.
		No	Troubleshooting is completed.
2	CHECK DTC PRESENT • **Is there another DTC.**	Yes	Go to other DTC inspection.
		No	Go to ENGINE SYMPTOM TROUBLESHOOTING No.5.

DTC P1650	Power steering pressure (PSP) switch out of self-test range
DESCRIPTION	• DTC P1650 indicates PSP signal is out of self-test range

[Possible Cause]
- PSP switch/shorting bar damaged
- Power steering pressure switch open or shorted to ground
- PCM damaged

STEP	INSPECTION		ACTION
1	VERIFY ELECTRICAL FUNCTION • Key on, engine running. • View PSP PID while turning steering wheel back and forth. • **Does the PSP PID indicate voltage Low/High or High/Low?**	Yes	Intermittent poor connection or component malfunction (REPAIR or REPLACE as necessary).
		No	Go to next step.
2	CHECK PSP SWITCH OPERATION • Key off. • Start engine and let idle in Park/Neutral. • Install dwell tacho tester. • Disconnect PSP switch connector and inspect end for damage. Service as necessary. • Jumper PSP signal circuit to ground at PSP connector. • **Does engine rpm increase?**	Yes	REPLACE PSP switch. VERIFY repair.
		No	REMOVE jumper. Go to next step.
3	CHECK CONTINUITY OF PSP CIRCUITS • Key off. • PSP switch disconnected. • Disconnect PCM. Inspect for damaged or pushed out pins, corrosion, loose wires, etc. Service as necessary. • Install breakout box. Leave PCM disconnected. • Measure resistance between Test Pin 31 at breakout box and PSP circuit at PSP switch connector. • **Is each resistance less than 5.0 ohms?**	Yes	Go to next step.
		No	SERVICE open circuit. REMOVE breakout box. RECONNECT all components. RERUN OBD Test.
4	CHECK PSP CIRCUIT FOR SHORT • Key off. • PSP switch disconnected. • Breakout box installed. Leave PCM disconnected. • Measure resistance between Test Pin 31 and Test Pin 91 at breakout box. • Measure resistance between Test Pin 31 at breakout box chassis ground. • **Is either resistance less than 10,000 ohms?**	Yes	SERVICE short in harness. REMOVE breakout box. RECONNECT all components. VERIFY repair.
		No	Go to next step.

STEP	INSPECTION		ACTION
5	CHECK PSP SWITCH RESISTANCE • Key off. • PSP switch disconnected. • Start engine and let idle in Park/Neutral. • Measure resistance between PSP switch terminals while turning steering wheel. • **Is resistance less than 5.0 ohms?**	Yes	REPLACE PCM. REMOVE breakout box. RECONNECT all components. RERUN OBD Test.
		No	REPLACE PSP switch. REMOVE breakout box. RECONNECT all components. RERUN OBD Test.

DTC P1652	IAC valve monitor disable by PSP switch failed on
DESCRIPTION	• DTC P1652 indicates power steering pressure (PSP) switch is always on at IAC system monitoring condition

[Possible Cause]
- Damaged PSP switch
- Damaged PCM
- PSP signal circuit short to ground

STEP	INSPECTION		ACTION
1	VERIFY ELECTRICAL FUNCTION • Key on, engine off. • View PSP PID with NGS tester while turning steering wheel. • **Does PSP PID indicate Low/High or High/Low?**	Yes	Intermittent poor connection or component malfunction. REPAIR or REPLACE as necessary.
		No	Go to next step.
2	CHECK PSP SWITCH OPERATION • Key off. • Start engine and let it idle. • View RPM PID with NGS tester. • Disconnect PSP switch vehicle harness connector. • **Does engine rpm decrease?**	Yes	Go to step
		No	Go to next step.
3	CHECK CONTINUITY OF PSP CIRCUIT • Key off. • PSP switch disconnected. • Disconnect PCM. Inspect for damage or pushed out pins, corrosion, loose wires, etc. Service as necessary. • Install breakout box. Leave PCM disconnected. • Measure resistance between Test Pin 31 at breakout box and PSP switch vehicle harness connector. • **Is resistance less than 5.0 ohms?**	Yes	Go to next step.
		No	SERVICE open circuit. REMOVE breakout box. RECONNECT all component. RESET PCM to completely clear DTCs. ☞ After Repair Procedure COMPLETE OBD II Drive Mode. RERUN OBD Test.
4	CHECK PSP SWITCH RESISTANCE • Key off. • PSP switch disconnected. • Measure resistance between PSP switch terminal and chassis ground while turning steering wheel. • **Is resistance less than 5.0 ohms?**	Yes	Go to next step.
		No	REPLACE PSP switch. REMOVE breakout box. RECONNECT all components. RESET PCM to completely clear DTCs. ☞ After Repair Procedure COMPLETE OBD II Drive Mode. RERUN OBD Test.
5	CHECK POWER STEERING FLUID PRESSURE • Key off. • Measure power steering fluid pressure. ☞ 06–12 POWER STEERING FLUID INSPECTION, Fluid Pressure Inspection • **Is power steering fluid pressure specified?**	Yes	REPLACE PCM. RERUN OBD Test.
		No	REPAIR or REPLACE engine speed sensing power steering system. RERUN OBD Test.

KOER DTC P1703	Brake switch out of self-test range
DESCRIPTION	• DTC P1703 indicates voltage was seen at brake switch input during KOEO self-test.

[Possible Cause]
- Brake pedal applied during KOEO self-test
- Brake switch input Test Pin shorted to power circuit
- Damaged brake switch

STEP	INSPECTION		ACTION
1	VERIFY BRAKE PEDAL WAS NOT APPLIED • **Was brake pedal applied during KOEO self-test?**	Yes	RERUN KOEO self-test. Avoid applying brake pedal during test.
		No	Go to next step.
2	CHECK OPERATION OF BRAKE LIGHT • Apply and release brake pedal several times and observe operation. • **Do brake light operate normally?**	Yes	Go to next step.
		No	Go to step 4 if stoplamps are never on. Go to step 6 if stoplamps are always on.
3	CHECK FOR PCM BOO PID CYCLING • Key on, engine off. • Access BOO PID. • Apply and release brake pedal several times while viewing BOO PID. **Note** • If BOO PID is not accessible, check the BOO circuit. • **Does BOO PID cycle ON/OFF?**	Yes	Go to Pinpoint Test for intermittent KOEO input sensor wiggle procedure.
		No	Check BOO circuit.
4	CHECK FOR POWER TO BRAKE SWITCH **Note** • Using a 12 volt test lamp, verify integrity of related fuses in fuse panel and check condition of brake light bulbs before starting this test. • Key off. • Disconnect brake switch. • Measure power input voltage between brake switch and chassis ground. • **Is voltage greater than 10 volts?**	Yes	Go to next step.
		No	SERVICE open power circuit to brake switch. RECONNECT switch. RESET PCM to completely clear DTCs. ☞ After Repair Procedure COMPLETE OBD II Drive Mode. RERUN OBD Test.
5	VERIFY INTEGRITY OF BRAKE SWITCH • Brake switch disconnected. • Connect digital multimeter test probes to brake switch terminals at brake switch. • Apply brake pedal while monitoring reading. • **Is resistance less than 5.0 ohms?**	Yes	SERVICE open circuit between brake switch and brake light ground. RECONNECT brake switch. RESET PCM to completely clear DTCs. ☞ After Repair Procedure COMPLETE OBD II Drive Mode. RERUN OBD Test.
		No	REPLACE brake switch. RECONNECT brake switch. RESET PCM to completely clear DTCs. ☞ After Repair Procedure COMPLETE OBD II Drive Mode. RERUN OBD Test.
6	VERIFY BRAKE SWITCHES NOT ALWAYS CLOSED • Key off. • Brake switch disconnected. • Key on, engine off. • **Are stoplamps still on?**	Yes	Go to next step.
		No	VERIFY proper installation of brake switch. If okay, REPLACE brake switch. RECONNECT brake switch. RESET PCM to completely clear DTCs. ☞ After Repair Procedure COMPLETE OBD II Drive Mode. RERUN OBD Test.
7	CHECK FOR SHORT TO POWER CIRCUIT IN PCM • Key off. • Brake switch disconnected. • Key on. • **Are stoplamps still on?**	Yes	Go to next step.
		No	REPLACE PCM. RECONNECT brake switch. RERUN OBD Test.

STEP	INSPECTION		ACTION
8	CHECK FOR SHORT TO POWER CIRCUIT IN SHIFT LOCK ACTUATOR • Key off. • PCM disconnected. • Disconnect shift lock actuator and cruise control module to isolate brake switch. • Key on, engine off. • **Are stoplamps still on?**	Yes	SERVICE short to power in stoplamp circuit. RECONNECT PCM, brake switch and other accessories. RERUN OBD test.
		No	SERVICE short in shift lock actuator, cruise control module or ABS control module. RECONNECT all components. RERUN OBD Test.

KOEO DTC P1703	**Brake switch out of self-test range**
DESCRIPTION	• DTC P1703 indicates that when the brake pedal was applied and released during KOER self-test, BOO signal did not cycle high and low.

[Possible Cause]
- Brake pedal not applied and released during KOER self-test
- Brake pedal applied during entire KOER self-test
- Open to ground or power
- Damaged brake switch
- Damaged PCM

STEP	INSPECTION		ACTION
1	VERIFY BRAKE PEDAL WAS APPLIED • **Was brake pedal applied and released during KOER self-test?**	Yes	Go to next step.
		No	RERUN KOEO self-test. APPLY and RELEASE brake pedal.
2	CHECK OPERATION OF BRAKE LIGHT • Apply and release brake pedal several times and observe brake light operation. • **Do stoplamps operate normally?**	Yes	Go to next step.
		No	Go to step 4 if brake light is never on. Go to step 6 if brake light is always on.
3	CHECK FOR BOO PID CYCLING • Key on, engine off. • Access BOO PID. • Apply and release brake pedal several times while viewing BOO PID. **Note** • If BOO PID is not accessible, check BOO circuit. • **Does the BOO PID cycle ON/OFF?**	Yes	Go to Pinpoint Test for intermittent KOEO input sensor wiggle procedure.
		No	Check the brake switch input circuit.
4	CHECK FOR POWER CIRCUIT TO BRAKE SWITCH **Note** • Using a 12 volt test lamp, verify integrity of related fuses in fuse panel and check condition of brake light bulbs before starting this test. • Key off. • Disconnect brake switch. • Measure power circuit input voltage between brake switch and chassis ground. • **Is voltage greater than 10 volts?**	Yes	Go to next step.
		No	SERVICE open power circuit to brake switch. RECONNECT brake switch. RESET PCM to completely clear DTCs. ☞ After Repair Procedure COMPLETE OBD II Drive Mode. RERUN OBD Test.
5	VERIFY INTEGRITY OF BRAKE SWITCH • Brake switch disconnected. • Connect digital multimeter test probes to brake switch terminals at brake switch. • Apply brake pedal while monitoring reading. • **Is resistance less than 5.0 ohms?**	Yes	SERVICE open circuit between brake switch and brake light ground. RECONNECT brake switch. RESET PCM to completely clear DTCs. ☞ After Repair Procedure COMPLETE OBD II Drive Mode. RERUN OBD Test.
		No	REPLACE brake switch. RECONNECT brake switch. RESET PCM to completely clear DTCs. ☞ After Repair Procedure COMPLETE OBD II Drive Mode. RERUN OBD Test.

STEP	INSPECTION		ACTION
6	VERIFY BRAKE SWITCHES NOT ALWAYS CLOSED • Key off. • Brake switch disconnected. • Key on, engine off. • **Is brake light still on?**	Yes	Go to next step.
		No	VERIFY proper installation of brake switch. If okay, REPLACE brake switch. RECONNECT brake switch. RESET PCM to completely clear DTCs. ☞ After Repair Procedure COMPLETE OBD II Drive Mode. RERUN OBD Test.
7	CHECK FOR SHORT TO POWER IN PCM • Key off. • Brake switch disconnected. • Key on. • **Is brake light still on?**	Yes	Go to next step.
		No	REPLACE PCM. RECONNECT brake switch. RERUN OBD Test.
8	CHECK FOR SHORT TO POWER CIRCUIT IN SHIFT LOCK ACTUATOR • Key off. • PCM disconnected. • Disconnect shift lock actuator or cruise control module to isolate brake switch. • Key on, engine off. • **Is brake light still on?**	Yes	SERVICE short to power in brake light circuit. RECONNECT PCM, brake switch and other accessories. RERUN OBD test.
		No	SERVICE short in shift lock actuator or cruise control module all components. RECONNECT all components. RERUN OBD Test.

ENGINE SYMPTOM TROUBLESHOOTING [FS]

W6U101W03

Diagnostic Index

TROUBLESHOOTING ITEM			DESCRIPTION
No.	TROUBLE		
1	Melts main or other fuse		—
2	Will not crank		Starter does not work
3	Hard start/long crank/erratic start/erratic crank		Starter cranks engine at normal speed but engine requires excessive cranking
4	Engine stalls	After start	Engine stops unexpectedly at idle and/or after start
		At idle	
5	Cranks normally but will not start		Starter cranks engine at normal speed but engine will not run
6	Slow return to idle		Engine takes more time than normal to return to idle speed
7	Engine runs rough/rolling idle		Engine speed fluctuates between specified idle speed and lower speed and excessive engine shake Idle speed too slow and excessive engine shake
8	Fast idle/runs on		Engine speed continues at fast idle after warm-up Engine runs after ignition switch is turned off
9	Low idle/stalls during deceleration		Engine stops unexpectedly at beginning of deceleration or recovery from deceleration
10	Engine stalls/quits	Acceleration/cruise	Engine stops unexpectedly at beginning of acceleration or during acceleration Engine stops unexpectedly while cruising
	Engine runs rough	Acceleration/cruise	Engine speed fluctuates during acceleration or cruising
	Misses	Acceleration/cruise	Engine misses during acceleration or cruising
	Buck/jerk	Acceleration/cruise deceleration	Vehicle bucks/jerks during acceleration, cruising, or deceleration
	Hesitation/stumble	Acceleration	Momentary pause at beginning of acceleration, or during acceleration
	Surges	Acceleration/cruise	Momentary minor irregularity in engine output
11	Lack/loss of power	Acceleration/cruise	Performance poor under load (i.e., power down when climbing hills)
12	Knocking/pinging	Acceleration/cruise	Sound produced when air/fuel mixture is ignited by something other than spark plug (i.e., hot spot in combustion chamber)
13	Poor fuel economy		Fuel economy unsatisfactory
14	Emissions compliance		Fails emissions test
15	MIL never on		Malfunction indicator lamp never on
16	High oil consumption/leaks		Oil consumption excessive
17	Cooling system concerns	Overheating	Engine runs at higher than normal temperature/overheats
18	Cooling system concerns	Runs cold	Engine does not reach normal operating temperature
19	Exhaust smoke		Blue, black, or white smoke from exhaust system
20	Fuel odor (in engine compartment)		Gasoline fuel smell or visible leaks
21	Engine noise		Engine noise from under hood
22	Vibration concerns (engine)		Vibration from under hood or driveline
23	A/C does not work		A/C compressor magnetic clutch does not engage when A/C is turned on
24	A/C always on/A/C compressor runs continuously		A/C compressor magnetic clutch does not disengage
25	A/C does not cut off under wide open throttle conditions		A/C compressor magnetic clutch does not disengage under wide open throttle
26	Exhaust sulphur smell		Rotten egg smell (sulphur) from exhaust
27	Intermittent concerns		Symptom occurs randomly and is difficult to diagnose

TROUBLESHOOTING ITEM			DESCRIPTION
No.	TROUBLE		
28	Automatic transaxle concerns	Upshift/downshift/engagement	Automatic transaxle concerns not related to engine performance
29	Fuel fill issues		Fuel tank does not fill smoothly
30	Fuel filling shut off issues		Fuel does not shut off properly
31	Constant voltage		Incorrect constant voltage

Quick Diagnostic Chart

Troubleshooting item		Possible factor	Malfunction of starter motor(Mechanical or electrical)	Starter interlock switch (Open)	Starter circuit including ignition switch open	Improper engine oil level	Low or dead battery	Malfunction of charging system	Cruise control system	Improper engine compression	Improper valve timing	Hydrolocked engine	Improper engine oil viscosity	Improper dipstick	Malfunction of base engine	Drive plate or Flywheel seized	Improper tension or damaged drive belts	Improper engine coolant level	Water and anti-freeze mixture improperly	Malfunction of cooling system(radiator, hoses, overflow system, thermostat, etc.)	Malfunction of cooling fan system	Engine or transaxle mounts improperly installed	Condenser fan and/or cooling fan seat improperly	Adjustment of accelerator cable free-play	Adjustment of cruise control cable free play	Fuel quality	Engine overheating	Air cleaner element clogged or restriction	Air leaks from intake air system (tubes loose, crack, gaskets broken)	Improper operation of IAC valve	Malfunction of throttle body	Vacuum leaks (damaged vacuum hose, mis-routing)	Mis-adjustment of initial ignition timing (CKP & crankshaft pulley mis-adjustment)	Malfunction of ignition coil (i.e. open, short or cracks)	Malfunction of external condenser	Malfunction of spark plug	Malfunction of high-tension leads (cracks, open, low resistance)	Damaged crankshaft position sensor (i.e. Open or short circuits)	Damaged crankshaft pulley	Improper gap between CKP sensor and crankshaft pulley	Malfunction of fuel pump(Mechanically or electrically)	Malfunction of pressure regulator	Restriction or clogged in fuel hoses
1	Melts main or other fuse															Not in applicable																												
2	Will not crank		x	x	x		x	x				x				x																												
3	Hard start/long crank/ erratic start/erratic crank																								x		x	x				x			x	x	x	x	x	x	x	x
4	Engine stalls	After start								x	x	x													x	x	x	x	x			x	x	x	x	x	x	x	x	x	x	x
		At idle								x	x	x													x	x	x	x	x			x	x	x	x	x	x	x	x	x	x	x
5	Cranks normally but will not start									x	x	x													x	x		x	x			x	x	x	x	x	x	x	x	x	x	x
6	Slow return to idle																			x										x												
7	Engine runs rough/ rolling idle									x	x														x	x		x	x			x	x			x	x	x	x	x	x	x
8	Fast idle/runs on																							x	x																		
9	Low idle/ stalls during deceleration																												x	x												
10	Engine stalls/quits	Acceleration/cruise							x	x	x														x	x	x	x		x	x			x		x	x	x	x	x	x
	Engine runs rough	Acceleration/cruise																																								
	Misses	Acceleration/cruise																																								
	Buck/jerk	Acceleration/cruise / deceleration																																								
	Hesitation/stumble	Acceleration																																								
	Surges	Acceleration/cruise																																								
11	Lack/loss of power	Acceleration/cruise								x	x														x	x	x	x			x			x			x	x	x	x	x	x
12	Knocking/pinging	Acceleration/cruise								x										x						x														x	x		
13	Poor fuel economy									x	x							x		x	x				x		x									x	x			x	x	x
14	Emission compliance									x	x				x					x							x	x			x					x	x			x	x	x
15	MIL never on																																									
16	High oil consumption/leaks												x	x	x																												
17	Cooling system concerns	Overheating															x	x	x	x	x																						
18	Cooling system concerns	Runs cold																		x	x																						
19	Exhaust smoke														x					x							x									x	x			x	x	x
20	Fuel odor (in engine compartment)																																									x	
21	Engine noise					x									x		x												x			x										
22	Vibration concerns(engine)																x						x	x																		
23	A/C does not work																																									
24	A/C always on/A/C compressor runs continuously																																									
25	A/C does not cut off under wide open throttle conditions																									x																	
26	Exhaust sulfur smell																																									
27	Intermittent concerns							x																																		
28	Automatic transaxle concerns	Upshift/downshift/ engagement	05-01A AUTOMATIC TRANSAXLE SYMPTOM TROUBLESHOOTING [LA4A-EL]																																							
29	Fuel refill concerns																																									
30	Malfunction of fuel refilling shut off																																									
31	Constant voltage																																									

W6U101WD4

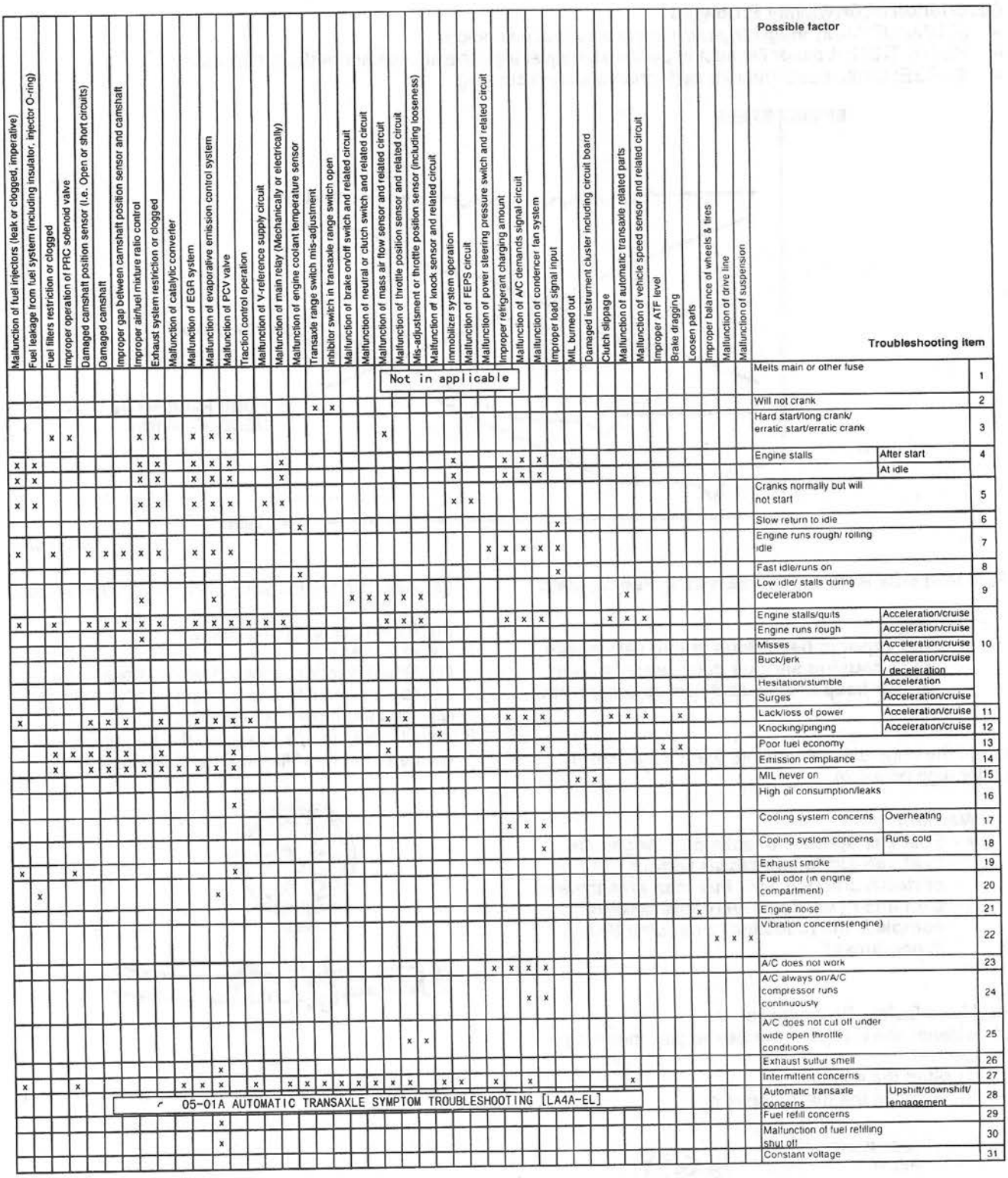
Possible factor
Malfunction of fuel injectors (leak or clogged, imperative)
Fuel leakage from fuel system (including insulator, injector O-ring)
Fuel filters restriction or clogged
Improper operation of PRC solenoid valve
Damaged camshaft position sensor (i.e. Open or short circuits)
Damaged camshaft
Improper gap between camshaft position sensor and camshaft
Improper air/fuel mixture ratio control
Exhaust system restriction or clogged
Malfunction of catalytic converter
Malfunction of EGR system
Malfunction of evaporative emission control system
Malfunction of PCV valve
Traction control operation
Malfunction of V-reference supply circuit
Malfunction of main relay (Mechanically or electrically)
Malfunction of engine coolant temperature sensor
Transaxle range switch mis-adjustment
Inhibitor switch in transaxle range switch open
Malfunction of brake on/off switch and related circuit
Malfunction of neutral or clutch switch and related circuit
Malfunction of mass air flow sensor and related circuit
Malfunction of throttle position sensor and related circuit
Mis-adjustment of throttle position sensor (including looseness)
Malfunction of knock sensor and related circuit
Immobilizer system operation
Malfunction of FEPS circuit
Malfunction of power steering pressure switch and related circuit
Improper refrigerant charging amount
Malfunction of A/C demands signal circuit
Malfunction of condencer fan system
Improper load signal input
MIL burned out
Damaged instrument cluster including circuit board
Clutch slippage
Malfunction of automatic transaxle related parts
Malfunction of vehicle speed sensor and related circuit
Improper ATF level
Brake dragging
Loosen parts
Improper balance of wheels & tires
Malfunction of drive line
Malfunction of suspension
Not in applicable
Troubleshooting item
Melts main or other fuse 1
Will not crank 2
Hard start/long crank/ erratic start/erratic crank 3
Engine stalls — After start / At idle 4
Cranks normally but will not start 5
Slow return to idle 6
Engine runs rough/ rolling idle 7
Fast idle/runs on 8
Low idle/ stalls during deceleration 9
Engine stalls/quits — Acceleration/cruise 10
Engine runs rough — Acceleration/cruise 10
Misses — Acceleration/cruise 10
Buck/jerk — Acceleration/cruise / deceleration 10
Hesitation/stumble — Acceleration 10
Surges — Acceleration/cruise 10
Lack/loss of power — Acceleration/cruise 11
Knocking/pinging — Acceleration/cruise 12
Poor fuel economy 13
Emission compliance 14
MIL never on 15
High oil consumption/leaks 16
Cooling system concerns — Overheating 17
Cooling system concerns — Runs cold 18
Exhaust smoke 19
Fuel odor (in engine compartment) 20
Engine noise 21
Vibration concerns(engine) 22
A/C does not work 23
A/C always on/A/C compressor runs continuously 24
A/C does not cut off under wide open throttle conditions 25
Exhaust sulfur smell 26
Intermittent concerns 27
Automatic transaxle concerns — Upshift/downshift/ engagement 28
Fuel refill concerns 29
Malfunction of fuel refilling shut off 30
Constant voltage 31
05-01A AUTOMATIC TRANSAXLE SYMPTOM TROUBLESHOOTING [LA4A-EL]

W6U101WD5

Description of Drivability Problems

- STUMBLE: Mildly irregular performance during acceleration.
- HESITATION: A dip or flat spot in performance just after the accelerator pedal is depressed.
- SURGE: Continuous irregular performance during cruising.

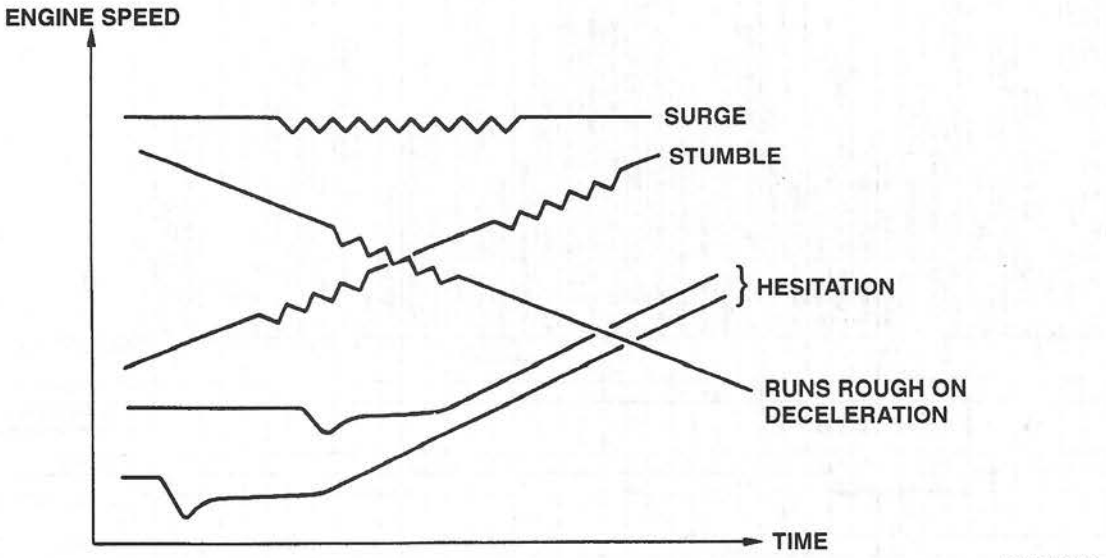

W6U101WAR

Fuel Pressure Release and Servicing Fuel System

Warning

- **Fuel vapor is hazardous. It can very easily ignite causing serious injury and damage. Always keep sparks and flames away from fuel.**

When the engine is not running, the fuel system is under high pressure.

Warning

- **Fuel line spills and leaks are dangerous. Fuel can ignite and cause serious injuries or death and damage. Fuel can also irritate skin and eyes. To prevent this, always complete the following "Fuel Line Safety Procedures."**

Fuel Line Safety Procedures

1. Release the fuel pressure before disconnecting a fuel line.
   (1) Start the engine.
   (2) Remove the fuel pump relay.

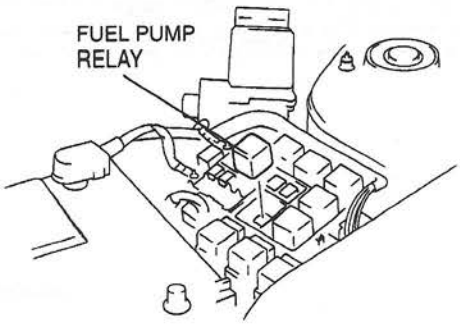

W6U101WAS

   (3) After the engine stalls, turn the ignition switch to OFF.
   (4) Install the fuel pump relay.
2. Avoid leakage.
   (1) When disconnecting a fuel line hose, wrap a rag around it to protect against fuel leakage.
   (2) Plug the hose after removal.
3. Install hose clamps to secure the fuel pressure gauge to the fuel filter and the main hose.

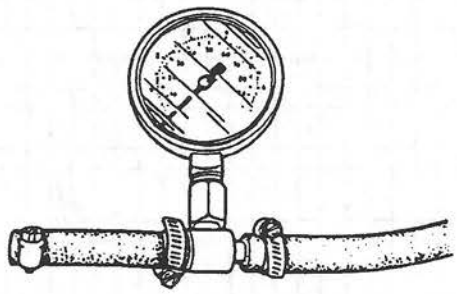

W6U101WAT

Symptom Troubleshooting

1	MELTS MAIN OR OTHER FUSE

[TROUBLESHOOTING HINTS]
Check the condition of the fuse

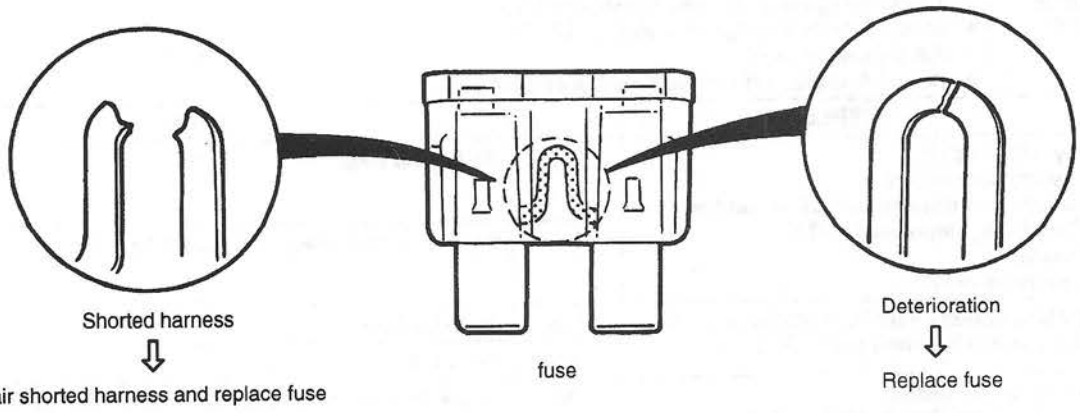

Damaged Fuse	Related Wiring Harness
MAIN (100 A)	Main fuse — Generator
BTN (40 A)	BTN fuse — ROOM fuse
ROOM (15 A)	ROOM fuse — PCM terminal
EGI INJ (30 A)	Main relay — Fuel injectors Main relay — Generator Main relay — EGR boost solenoid valve Main relay — PRC solenoid valve Main relay — EGR valve Main relay — Idle air control valve Main relay — Purge solenoid valve Main relay — Tank pressure control valve Main relay — Mass air flow sensor Main relay — Fuel pump relay Main relay — Heated oxygen sensor heater Main relay — Solenoid body
ENGINE (10 A)	ENGINE fuse — Main relay ENGINE fuse — Fuel pump relay
METER (10 A)	METER fuse — Transaxle range switch

W6U101WAU

2	WILL NOT CRANK
DESCRIPTION	Starter does not work
POSSIBLE CAUSE	• Open starter circuit between ignition switch and starter • Transaxle range switch malfunction (ATX) • Transaxle range switch misadjustment (ATX) • Starter interlock switch malfunction (MTX) • Starter malfunction • Seized/hydrolocked engine, flywheel or drive plate

STEP	INSPECTION		ACTION
1	Verify following(s): • Battery connection. • Automatic transaxle in Park or Neutral. • Clutch fully depressed (MTX). • Fuses. Are all items okay?	Yes	Go to next step.
		No	Service as necessary and repeat step 1.
2	Is clicking sound heard from starter when the ignition switch is turned to START?	Yes	Go to next step.
		No	Go to step 3.
3	Check starting system. ☞ 01–19 STARTER INSPECTION Is starting system okay?	Yes	Check for seized/hydrolocked engine, flywheel or drive plate. ☞ 01–10A ENGINE COMPLETE [FS]
		No	Service as required.
4	Do any other electrical accessories work?	Yes	Go to next step.
		No	Check the charging system. ☞ 01–17 GENERATOR INSPECTION
5	**Note** • Following test should be performed on automatic transaxles only. For manual transaxles, go to next step. Connect NGS tester to DLC. Access CPP/PNP PID. Turn ignition switch on. Is CPP/PNP PID indicated ON when selecting P or N range?	Yes	Go to next step.
		No	Check for adjustment of transaxle range switch. If transaxle range switch is adjusted properly, check for open circuit of transaxle range switch and related circuit.
6	Retrieve and record any continuous memory DTCs. Is any continuous memory DTC displayed?	Yes	DTC displayed. Go to appropriate DTC test.
		No	No DTC displayed. Go to next step.
7	Retrieve and record any KOEO DTCs. Is any DTC displayed during KOEO inspection?	Yes	DTC displayed. Go to appropriate DTC test.
		No	No DTC displayed. Check following: • START circuit in ignition switch. • Open circuit between ignition switch and starter. • Starter interlock switch (MTX).
8	Verify test results. If okay, return to diagnostic index to service any additional symptoms.		

3	HARD START/LONG CRANK/ERRATIC START/ERRATIC CRANK
DESCRIPTION	• Starter cranks engine at normal speed but engine requires excessive cranking time before start • Battery in normal condition
POSSIBLE CAUSE	• Spark leak from hightension leads • Poor fuel quality • Spark plug malfunction • Erratic signal from crankshaft position sensor • Positive crankcase ventilation (PCV) valve malfunction • Purge solenoid valve malfunction • Restriction in exhaust system • Vacuum leaks • Starting system malfunction • Air leak from intake air system • Air cleaner restriction • Inadequate fuel pressure • Mass air flow sensor contamination • EGR valve malfunction **Warning** **Following troubleshooting flow chart contains fuel system diagnosis and repair procedures. Read following warnings before performing fuel system service:** • **Fuel vapor is hazardous. It can easily ignite, causing serious injury and damage. Always keep sparks and flames away from fuel.** • **Fuel line spills and leaks are dangerous. Fuel can ignite and cause serious injuries or death and damage. Fuel can also irritate skin and eyes. To prevent this, always complete "BEFORE REPAIR PROCEDURE" and "AFTER REPAIR PROCEDURE" described in this manual.** **☞ 01–14 BEFORE REPAIR PROCEDURE** **☞ 01–14 AFTER REPAIR PROCEDURE**

STEP	INSPECTION		ACTION
1	Verify following: • Vacuum leaks • Fuel quality (i.e. proper octane, contamination, winter/summer blend). • Loose bands on intake air system. • Cracks on intake air system parts. • Air cleaner restriction. Are all items okay?	Yes	Go to next step.
		No	Service as necessary.
2	Are any DTCs displayed during continuous memory, KOEO and KOER self-test?	Yes	DTC displayed. Go to appropriate DTC test.
		No	No DTC displayed. Go to next step.
3	Is engine overheating?	Yes	Go to flowchart 17 for "COOLING SYSTEM CONCERNS OVERHEATING".
		No	Go to next step.
4	Check for cracks on high tension leads Is there any crack on high tension leads?	Yes	Repair suspected high tension lead.
		No	Go to next step.
5	Check spark plug conditions. Is spark plug wet, converted with carbon or grayish white?	Yes	If spark plug is wet or converted with carbon, check for fuel leak from fuel injector. If spark plug is grayish white, check for clogged fuel injector.
		No	Install spark plugs on original cylinders. Go to next step.
6	Visually inspect crankshaft position (CKP) sensor and teeth of crankshaft pulley. Is CKP sensor and teeth of crankshaft pulley okay?	Yes	Go to next step.
		No	Replace malfunctioning part.
7	Measure gap between crankshaft position (CKP) sensor and teeth of crankshaft pulley. **Specification** **0.5—1.5 mm {0.02—0.05 in}** Is gap within specification?	Yes	Go to next step.
		No	Adjust CKP sensor.

STEP	INSPECTION		ACTION
8	Remove PCV valve and check PCV valve. Does PCV valve rattle?	Yes	Go to next step.
		No	Replace PCV valve.
9	Install fuel gauge between fuel filter and fuel distribution pipe. Connect NGS tester to DCL. In OUTPUT TEST MODE select "ALL ON" and press start. Is fuel line pressure correct with ignition switch ON? **Fuel line pressure** **260—310 kPa** **{2.6—3.2 kgf/cm², 37—46 psi}**	Yes	Go to next step.
		No	**Zero or low:** Check fuel pump circuit. Check for open fuel pump relief valve. Check for fuel leak inside pressure regulator. Check for clogged main fuel line. **High:** Check pressure regulator for high pressure cause. Check for clogged fuel return line.
10	Is fuel line pressure held after ignition switch is turned off? **Fuel line pressure** **More than 150 kPa** **{1.5 kgf/cm², 21 psi}**	Yes	Go to next step.
		No	Check pressure regulator diaphragm condition. If condition is okay, check fuel injector. If condition is not okay, replace pressure regulator.
11	Disconnect vacuum hose from pressure regulator and plug hose. Start engine. Does fuel line pressure remain within ± 20 kPa {0.21 kgf/cm², 3 psi} while driving vehicle?	Yes	Go to next step.
		No	Check for clogged fuel filter.
12	Connect vacuum hose to pressure regulator. Install vacuum gauge to intake manifold. Start the engine. Does fuel pressure gauge reading increase as vacuum gauge reading decreases and/or does fuel pressure gauge reading decreases as vacuum gauge reading increases?	Yes	Go to next step.
		No	Connect vacuum pump to pressure regulator. Start engine and check that fuel pressure reading changed as vacuum changes. If changes, check vacuum line. If no change, replace pressure regulator.
13	Disconnect a vacuum hose from purge solenoid valve and plug opening end of vacuum hose. Attempt to start engine. Is starting condition improved?	Yes	Check if purge solenoid valve sticks to open.
		No	Go to next step.
14	Check for contaminated mass air flow sensor. Is there any contamination?	Yes	Replace mass airflow sensor.
		No	Go to next step.
15	Is there restriction in exhaust system?	Yes	Check exhaust system.
		No	Go to next step.
16	Check the engine condition while tapping the EGR valve housing. Does engine condition improve?	Yes	Replace EGR valve.
		No	Go to next step.
17	Check starting system. ☞ 01–19 STARTER INSPECTION Is starting system normal?	Yes	Check for the loosen connectors or poor terminal contact. If okay, remove the EGR valve and visually check for mechanically stuck EGR valve.
		No	Check continuity of stepping motor coil. If okay, go to next step.
18	Verify test results. If okay, return to diagnostic index to service any additional symptoms.		

4	ENGINE STALLS –AFTER START, AT IDLE
DESCRIPTION	Engine stops unexpectedly
POSSIBLE CAUSE	• Operation of immobilizer system • Air leak from intake air system parts • Improper operation of IAC valve • No signal from crankshaft position sensor due to sensor, related wire or wrong installation • Spark leak from high-tension leads • PCV valve malfunction • Restriction in exhaust system • Open or short circuit in fuel pump and related harness • Inadequate fuel pressure • Fuel leak from fuel injector • A/C system improperly operation • Purge solenoid valve malfunction • EGR valve malfunction • Low engine compression • Vacuum leak • Poor fuel quality • Air cleaner restriction • Electrical connector disconnection • No battery power supply to PCM or poor ground • Fuel pump mechanical malfunction • Fuel injector clogged **Warning** **Following troubleshooting flow chart contains fuel system diagnosis and repair procedures. Read following warnings before performing fuel system service:** • **Fuel vapor is hazardous. It can easily ignite, causing serious injury and damage. Always keep sparks and flames away from fuel.** • **Fuel line spills and leaks are dangerous. Fuel can ignite and cause serious injuries or death and damage. Fuel can also irritate skin and eyes. To prevent this, always complete "BEFORE REPAIR PROCEDURE" and "AFTER REPAIR PROCEDURE" described in this manual.** **☞ 01–14 BEFORE REPAIR PROCEDURE** **☞ 01–14 AFTER REPAIR PROCEDURE**

STEP	INSPECTION		ACTION
1	**Note** • Following test should be performed on vehicles equipped with immobilizer system. Skip this test and go to step 12 for non-immobilizer system. Attempt to start engine at least four times. Then, retrieve and record any continuous memory DTC. Is following condition appeared? • Engine is not completely started and DTC P1624 is restrieved.	Yes	Go to step 3.
		No	Go to next step.
2	Is engine stalled after approx. 2 seconds since engine is started?	Yes	Go to next step.
		No	Immobilizer system is okay.
3	Is immobilizer unit connector securely connected to immobilizer unit?	Yes	Go to next step.
		No	Connect immobilizer unit connector securely. Return step 2.
4	Does security light flash and indicate following immobilizer DTCs? DTC: 01, 02, 03, 11, 21	Yes	Go to "ON BOARD DIAGNOSTIC FUNCTION" of immobilizer system.
		No	Go to next step.
5	Does security light illuminate?	Yes	Go to step 8.
		No	Go to next step.
6	Does security flush and indicate following immobilizer system DTC after more than 135 seconds after ignition switch turned ON? DTC: 24, 30	Yes	Go to "ON BOARD DIAGNOSTIC FUNCTION" of immobilizer system.
		No	Go to next step.

STEP	INSPECTION		ACTION
7	Turn ignition switch off. Disconnect immobilizer unit connector. Connect jumper between immobilizer unit connector terminal M and ground. Turn ignition switch ON. Does security light illuminate?	Yes	Reconnect immobilizer unit connector. Go to next step.
		No	Inspection open circuit between immobilizer unit connector terminal M and instrument cluster. If okay, inspect security light bulb. Repair or replace if necessary. Reconnect immobilizer unit connector. Then return to step 4.
8	Connect NGS tester to DLC and retrieve DTC. Is following DTC displayed? DTC: P1602, P1603, P1604, P1621, P1622, P1624	Yes	Go to appropriate DTC test.
		No	Go to next step.
9	Is there continuity between PCM ground terminal 23, 24, 51, 76, 77, 103 and ground?	Yes	Go to next step.
		No	Repair or replace wiring harness.
10	Turn ignition switch ON. Access VPWR PID. Is VPWR PID okay? VPWR PID: Battery voltage	Yes	Go to next step.
		No	Repair or replace wiring harness.
11	Disconnect immobilizer unit connector. Turn ignition switch ON. Is there battery voltage at immobilizer unit connector terminal J?	Yes	Check for open circuit between PCM connector terminal 5 and immobilizer unit connector terminal A.
		No	Repair or replace wiring harness between immobilizer unit connector terminal J and fuse panel.
12	Verify following: • Vacuum connection. • Air cleaner element. • No air leaks from intake air system. • No restriction of intake air system. • Proper sealing of intake manifold and components attached to intake manifold (i.e, EGR valve, IAC valve.) • Ignition wiring. • Fuel quality; such as proper octane, contamination, winter/summer blend. • Electrical connections. Are all items okay?	Yes	Go to next step.
		No	Service as necessary and repeat step 12.
13	Does vehicle now stall at idle in park/neutral with all accessories off?	Yes	Vehicle stalls. Go to step 15.
		No	Go to next step.
14	Retrieve and record any continuous memory, KOEO and KOER DTCs. If engine stalls, retrieve continuous memory and KOEO DTCs. Are any DTCs displayed?	Yes	DTC displayed. Go to appropriate DTC test.
		No	If communication error message is displayed on NGS tester, check following: • Open circuit between main relay and PCM using breakout box. • Open main relay ground circuit. • Main relay stuck to open. • Open PCM ground circuit. • Poor connection of vehicle body ground. If NGS tester works and no DTCs are displayed, go to step 16.
15	Retrieve and record any continuous memory and KOEO DTCs. Are any DTCs displayed?	Yes	DTC displayed. Go to appropriate DTC test.
		No	If communication error message is displayed on NGS tester, check following: • Open circuit between main relay and PCM using breakout box. • Open main relay ground circuit. • Main relay stuck to open. • Open PCM ground circuit. • Poor connection of vehicle body ground. If NGS tester works and no DTCs are displayed, go to next step.
16	Attempt to start engine at part throttle. Does engine run smooth at part throttle?	Yes	Check IAC valve and wiring harness.
		No	Go to next step.

STEP	INSPECTION		ACTION
17	Connect NGS tester to DLC. Access RPM PID. Is RPM PID indicating engine speed during cranking of engine?	Yes	Go to next step.
		No	Check following: • Open or short circuit in CKP sensor. • Open or short circuit between CKP sensor and PCM. • Open or short circuit between CKP sensor and harness. If CKP sensor and harness okay, go to next step.
18	Visually inspect crankshaft position (CKP) sensor and teeth of crankshaft pulley. Is CKP sensor and teeth of crankshaft pulley okay?	Yes	Go to next step.
		No	Replace malfunctioning part.
19	Measure gap between crankshaft position (CKP) sensor and teeth of crankshaft pulley. **Specification** **0.5—1.5 mm {0.02—0.05 in}** Is gap within specifications?	Yes	Go to next step.
		No	Adjust CKP sensor.
20	Check for cracks on high tension leads. Is there any crack on high tension leads?	Yes	Repair suspected high tension lead.
		No	Go to next step.
21	Is strong blue spark visible at each disconnected high-tension lead while cranking engine?	Yes	Go to next step. If symptom occurs with A/C on, go to step 27.
		No	Check following: • Open or short circuit in ignition coil. • Hightension lead(s). • Open or short circuit in wire harness for ignition system. • Malfunction of external condenser for eliminating ignition noise. • Open circuit between ignition switch and ignition coil. • Open circuit between ignition coil and PCM.
22	Check spark plug conditions. Is spark plug wet, converted with carbon or grayish white?	Yes	If spark plug is wet or converted with carbon, check for fuel leak from injector. If spark plug is grayish white, check clogged for fuel injector.
		No	Install spark plugs on original cylinders. Go to next step.
23	Remove PCV valve and shake PCV valve. Does PCV valve rattle?	Yes	Go to next step.
		No	Replace PCV valve.
24	Is there restriction in the exhaust system? Is there any restriction?	Yes	Check exhaust system.
		No	Go to next step.
25	Install fuel gauge between fuel filter and fuel distribution pipe. Connect NGS tester to DLC. In OUTPUT TEST MODE, select "ALL ON" and press start. Is fuel line pressure correct with ignition switch ON? **Fuel line pressure** **260—310 kPa** **{2.6—3.2 kgf/cm^2, 37—46 psi}**	Yes	Go to next step.
		No	**Zero or low:** Check fuel pump circuit. Check for open fuel pump relief valve. Check for fuel leak inside pressure regulator. Check for clogged main fuel line. **High:** Check pressure regulator for high pressure cause. Check for clogged fuel return line.
26	Visually check for fuel leakage at fuel injector O-ring, pressure regulator, and fuel line. Service as necessary. Does fuel line pressure hold after ignition switch is turned OFF? **Fuel line pressure** **More than 150 kPa** **{1.5 kgf/cm^2, 21 psi} for 5 minutes**	Yes	Go to next step.
		No	Check pressure regulator diaphragm condition. If condition is okay, check fuel injector. If condition is not okay, replace pressure regulator.

STEP	INSPECTION		ACTION
27	**Note** • The following test is for stall concerns with A/C on. If other symptoms exists, go to next step. Connect pressure gauges to A/C low and high pressure side lines. Turn A/C on and measure low side and high side pressure. Are pressure within specifications? ☞ 07–10 REFRIGERANT PRESSURE CHECK	Yes	Go to next step.
		No	Check follows: • Refrigerant charging amount. • A/C pressure switches. • Additional fan operation. • A/C relay.
28	Disconnect vacuum hose between purge solenoid and intake manifold from purge solenoid side. Plug opening end of vacuum hose. Start engine. Is engine stall eliminated?	Yes	Check if purge control solenoid sticks to open. Check evaporative emission control system.
		No	Go to next step.
29	Is air leakage felt or heard at intake air system components while racing engine to higher speed?	Yes	Repair or replace.
		No	Go to next step.
30	Check engine condition while tapping EGR valve housing. Does the engine condition improve?	Yes	Replace EGR control valve.
		No	Go to next step.
31	Is engine compression correct?	Yes	Check for valve timing.
		No	Check for cause.
32	Verify test results. If okay, return to diagnostic index to service any additional symptoms.		

5	CRANKS NORMALLY BUT WILL NOT START
DESCRIPTION	• Starter cranks engine at normal speed but engine will not run • Refer to "ENGINE STALLS" if this symptom appears after engine stall • Fuel in tank • Battery in normal condition
POSSIBLE CAUSE	• Operation of immobilizer system • Air leak from intake air system • Improper operation of IAC valve • No signal from crankshaft position sensor due to sensor, related wire or incorrect installation • Spark leak from hightension leads • PCV valve malfunction • Restriction in exhaust system • Open or short circuit in fuel pump and related harness • Fuel pump mechanical malfunction • Fuel injector clogged • No battery power supply to PCM • Open PCM ground or vehicle body ground • EGR valve malfunction • Low engine compression • Vacuum leak • Poor fuel quality • Air cleaner restriction • Disconnected electrical connector disconnection • Inadequate fuel pressure • Fuel leak from injector • Purge solenoid valve malfunction **Warning** **Following troubleshooting flow chart contains fuel system diagnosis and repair procedures. Read following warnings before performing fuel system service:** • **Fuel vapor is hazardous. It can easily ignite, causing serious injury and damage. Always keep sparks and flames away from fuel.** • **Fuel line spills and leaks are dangerous. Fuel can ignite and cause serious injuries or death and damage. Fuel can also irritate skin and eyes. To prevent this, always complete "BEFORE REPAIR PROCEDURE" and "AFTER REPAIR PROCEDURE" described in this manual.** **☞ 01–14 BEFORE REPAIR PROCEDURE** **☞ 01–14 AFTER REPAIR PROCEDURE**

STEP	INSPECTION		ACTION
1	**Note** • The following test should be performed test vehicles equipped with immobilizer system. Skip this test and go to step 12 for vehicles without immobilizer system. Is following condition appeared? • Engine is not completely started and DTC P1624 is retreived.	Yes	Go to step 3.
		No	Go to next step.
2	Is engine stalled after approx. 2 seconds since engine is started?	Yes	Go to next step.
		No	Immobilizer system is okay.
3	Is immobilizer unit connector securely connected to immobilizer unit?	Yes	Go to next step.
		No	Connect immobilizer unit connector securely. Return step 2.
4	Does security light flash and indicate following immobilizer DTCs? DTC: 01, 02, 03, 11, 21	Yes	Go to "ON BOARD DIAGNOSTIC FUNCTION" of immobilizer system.
		No	Go to next step.
5	Does security light illuminate?	Yes	Go to step 8.
		No	Go to next step.
6	Does security light flush and indicate following immobilizer system DTC after more than 135 seconds after ignition switch turned ON? DTC: 24, 30	Yes	Go to "ON BOARD DIAGNOSTIC FUNCTION" of immobilizer system.
		No	Go to next step.

STEP	INSPECTION		ACTION
7	Turn ignition switch off. Disconnect immobilizer unit connector. Connect jumper between immobilizer unit connector terminal M and ground. Turn ignition switch ON. Does security light illuminate?	Yes	Reconnect immobilizer unit connector. Go to next step.
		No	Inspection open circuit between immobilizer unit connector terminal M and instrument cluster. If okay, inspect security light bulb. Repair or replace if necessary. Reconnect immobilizer unit connector. Then return to step 4.
8	Connect NGS tester to DLC and retrieve DTC. Is following DTC displayed? DTC: P1602, P1603, P1604, P1621, P1622, P1624	Yes	Go to appropriate DTC test.
		No	Go to next step.
9	Is there continuity between PCM ground terminal 23, 24, 51, 76, 77, 103 and ground?	Yes	Go to next step.
		No	Repair or replace wiring harness.
10	Turn ignition switch ON. Access VPWR PID. Is VPWR PID okay? VPWR PID: Battery voltage	Yes	Go to next step.
		No	Repair or replace wiring harness.
11	Disconnect immobilizer unit connector. Turn ignition switch ON. Is there battery voltage at immobilizer unit connector terminal J?	Yes	Check for open circuit between PCM connector terminal 5 and immobilizer unit connector terminal A.
		No	Repair or replace wiring harness between immobilizer unit connector terminal J and fuse panel.
12	Verify following: • External fuel shut off or accessory (ignition switch, alarm etc.). • Fuel quality: such as proper octane, contamination, winter/summer blend. • No air leaks from intake air system. • Proper sealing of intake manifold and components attached to intake manifold: EGR valve, IAC valve. • Ignition wiring. • Electrical connections. • Fuses. Are all items okay?	Yes	Go to next step.
		No	Service as necessary and repeat step 12.
13	Retrieve and record any continuous memory and KOEO DTCs. Are there any DTCs displayed?	Yes	Go to appropriate DTC test.
		No	If communication error message is displayed on NGS tester, check following: • Open circuit between main relay and PCM using breakout box. • Open main relay ground circuit. • Main relay stuck open. • Open PCM ground circuit. • Poor connection of vehicle body ground. If NGS tester works and no DTCs are displayed, go to next step.
14	Does engine start with throttle closed?	Yes	Go to step 33.
		No	Go to next step.
15	Will engine start and run smoothly at part throttle?	Yes	Check IAC valve and wiring harness.
		No	Go to next step.
16	Connect NGS tester to DLC. Access RPM PID. Is RPM PID indicating engine speed when cranking the engine?	Yes	Go to next step.
		No	Check following: • Open or short circuit in CKP sensor. • Open or short circuit between CKP sensor and PCM. • Open or short circuit between CKP sensor harnesses. If CKP sensor and harness okay, go to next step.
17	Visually inspect crankshaft position (CKP) sensor and teeth of crankshaft pulley. Is CKP sensor and teeth of crankshaft pulley okay?	Yes	Go to next step.
		No	Replace malfunctioning part.

STEP	INSPECTION		ACTION
18	Measure gap between crankshaft position (CKP) sensor and teeth of crankshaft pulley. **Specification** **0.5—1.5 mm {0.02—0.05 in}** Is gap within specifications?	Yes	Go to next step.
		No	Adjust CKP sensor.
19	Check for cracks on high tension leads. Is there any crack on high tension leads?	Yes	Repair suspected high tension lead.
		No	Go to next step.
20	Is strong blue spark visible at each disconnected hightension lead while cranking engine?	Yes	Go to next step.
		No	Check following(s): • Open or short circuit in ignition coil. • Hightension lead(s). • Open or short circuit in wire harness for ignition system. • Malfunction of external condenser for eliminating ignition noise. • Open circuit between ignition switch and ignition coil. • Open circuit between ignition coil and PCM.
21	Check spark plug conditions. Is spark plug wet, converted with carbon or grayish white?	Yes	If spark plug is wet or converted with carbon, check for fuel leak from injector. If spark plug is grayish white, check for clogged fuel injector.
		No	Install spark plugs on original cylinders. Go to next step.
22	Disconnect TP sensor connector. Is there correct voltage at TP sensor connector terminal A with ignition switch ON? **Specification** **4.5—5.5 V**	Yes	Go to next step.
		No	Check short to ground in constant voltage circuit between TP sensor, EGR boost sensor or fuel tank pressure (FTP) sensor and powertrain control module.
23	Disconnect NGS tester. Turn ignition switch on. Check (V) terminal voltage of FEPS at DLC. Is voltage greater than 9 V?	Yes	Check short to power in FEPS line between DLC and PCM.
		No	Go to next step.
24	Remove and shake PCV valve. Does PCV valve rattle?	Yes	Go to next step.
		No	Replace PCV valve.
25	Is there any restriction in exhaust system?	Yes	Check exhaust system.
		No	Go to next step.
26	Install fuel gauge between fuel filter and fuel distributor. Connect NGS tester to DLC. Select "ALL ON" in OUTPUT TEST MODE and press start. Is fuel line pressure correct when ignition switch is cycled ON/OFF five times? **Fuel line pressure** **260—310 kPa** **{2.6—3.2 kgf/cm^2, 37—46 psi}**	Yes	Go to next step.
		No	**Zero or low:** Check fuel pump circuit. Check for open fuel pump relief valve. Check for fuel leak inside pressure regulator. Check for clogged main fuel line. **High:** Check pressure regulator for high pressure cause. Check for clogged fuel return line.
27	Visually check for fuel leakage at fuel injector O-ring, pressure regulator and fuel line. Service as necessary. Is fuel line pressure held after ignition switch is turned OFF? **Fuel line pressure** **More than 150 kPa** **{1.5 kgf/cm^2, 21 psi} for 5 minutes**	Yes	Go to next step.
		No	Check pressure regulator diaphragm condition. If condition is okay, check fuel injector. If condition is not okay, replace pressure regulator.

STEP	INSPECTION		ACTION
28	Crank engine for five seconds. Does pressure drop more than 34 kPa {0.35 kgf/cm^2, 5 psi} by end of five second crank cycle?	Yes	Go to next step.
		No	Check resistance of fuel injector(s). If resistance is okay, check following: • Fuel injector drive signal. • Injection flow rate. • PCM. If resistance is not okay, check following: • Open circuit in fuel injector circuit.
29	Disconnect vacuum hose between purge control solenoid and intake manifold from solenoid side. Plug opening end of vacuum hose. Attempt to start engine. Is starting condition improved?	Yes	Check if purge solenoid valve sticks to open mechanically. Check evaporative emission control system.
		No	Go to next step.
30	Is air leakage felt or heard at intake air system components while racing engine to higher speed?	Yes	Repair or replace.
		No	Go to next step.
31	Check engine condition while tapping EGR valve housing. Does engine condition improve?	Yes	Replace EGR valve.
		No	Go to next step.
32	Is engine compression correct?	Yes	Check valve timing.
		No	Check for causes.
33	Verify test results. If okay, return to diagnostic index to service any additional symptoms.		

6	SLOW RETURN TO IDLE
DESCRIPTION	Engine takes more time than normal to return to idle speed
POSSIBLE CAUSE	• Malfunction of ECT sensor • Thermostat stuck to open • Throttle body malfunction • Air leak from intake air system

STEP	INSPECTION		ACTION
1	Retrieve and record any continuous memory, KOEO and KOER DTCs. Are there any DTCs displayed?	Yes	**DTC displayed:** Go to appropriate DTC test.
		No	**No DTC displayed:** Go to next step.
2	Make sure A/C switch is in OFF position. Place vehicle in park or neutral. Connect NGS tester to DLC. Access ECT V PID. Start engine and record ECT voltage reading every 60 seconds. **Note** • When ECT voltage reverses direction trend or changes slightly (0.03 volt or less), thermostat has opened. Is thermostat opening voltage within range?	Yes	Engine coolant temperature and thermostat are okay. Go to next step.
		No	Remove thermostat from engine and verify thermostat operation. If temperature gauge on instrument cluster is normal but ECT V is not same as temperature gauge reading, check ECT sensor.
3	Is throttle body free of contaminated?	Yes	Check for air leaks from intake air system components while racing engine to higher speed.
		No	Clean or replace throttle body.
4	Verify test results. If okay, return to diagnostic index to service any additional symptoms.		

7	ENGINE RUNS ROUGH/ROLLING IDLE
DESCRIPTION	• Engine speed fluctuates between specified idle speed and lower speed and excessive engine shake • Idle speed too slow and excessive engine shake
POSSIBLE CAUSE	• Air leak from intake air system parts • Spark leak from hightension leads • Improper operation of IAC valve • Erratic or no signal from camshaft position (CMP) sensor • Erratic signal from crankshaft position (CKP) sensor • PCV valve malfunction • Restriction in exhaust system • Inadequate fuel pressure • Fuel leak from fuel injector • Engine overheating • A/C system improperly operation • Purge solenoid valve malfunction • EGR valve malfunction • Low engine compression • Poor fuel quality • Air cleaner restriction • Electrical connector disconnection • Fuel pump mechanical malfunction • Fuel injector clogged • Vacuum leak **Warning** **Following troubleshooting flow chart contains fuel system diagnosis and repair procedures. Read following warnings before performing fuel system service:** **• Fuel vapor is hazardous. It can easily ignite, causing serious injury and damage. Always keep sparks and flames away from fuel.** **• Fuel line spills and leaks are dangerous. Fuel can ignite and cause serious injuries or death and damage. Fuel can also irritate skin and eyes. To prevent this, always complete "BEFORE REPAIR PROCEDURE" and "AFTER REPAIR PROCEDURE" described in this manual.** **☞ 01–14 BEFORE REPAIR PROCEDURE** **☞ 01–14 AFTER REPAIR PROCEDURE**

STEP	INSPECTION		ACTION
1	Verify following: • External fuel shut off or accessory (ignition switch, alarm etc). • Fuel quality; such as proper octane, contamination, winter/summer blend. • No air leaks from intake air system. • Proper sealing of intake manifold and components attached to intake manifold; such as EGR valve, IAC solenoid. • Ignition wiring. • Electrical connections. • Fuses. Are all items okay?	Yes	Go to next step.
		No	Service as necessary and repeat step 1.
2	Retrieve and record any continuous memory, KOEO and KOER DTCs. Are there any DTCs displayed?	Yes	Go to appropriate DTC test.
		No	No DTCs displayed. Go to next step.
3	Is engine overheating?	Yes	Go to flowchart 17 for "COOLING SYSTEM CONCERNS OVERHEATING".
		No	Go to next step.

STEP	INSPECTION		ACTION
4	**Note** • The following test is for engine running rough idle with A/C ON concerns. If other symptoms exist, go to next step. Connect pressure gauge to A/C low and high pressure side lines. Start engine and run it at idle. Turn A/C ON. Measure low side and high side pressures. Are reading pressures within specification? ☞ 07–10 REFRIGERANT PRESSURE CHECK	Yes	Go to next step.
		No	Check following: • Refrigerant charging amount. • A/C pressure switches. • Additional fan operation. • A/C relay.
5	**Note** • Following test is for engine running rough with P/S ON. If other symptoms exist, go to next step. Disconnect power steering pressure switch connector. Measure voltage at power steering pressure switch connector. Is voltage greater than 10 V?	Yes	Check power steering pressure switch operation.
		No	Go to next step.
6	Visually inspect crankshaft position (CKP) sensor and teeth of crankshaft pulley. Is CKP sensor and teeth of crankshaft pulley okay?	Yes	Go to next step.
		No	Replace malfunctioning part.
7	Measure gap between crankshaft position (CKP) sensor and teeth of crankshaft pulley. **Specification** **0.5—1.5 mm {0.02—0.05 in}** Is gap within specifications?	Yes	Go to next step.
		No	Adjust CKP sensor.
8	Check for cracks on high tension leads. Is there any crack on high tension leads?	Yes	Repair suspected high tension lead.
		No	Go to next step.
9	Check spark plug conditions. Is spark plug wet, converted with carbon or grayish white?	Yes	If spark plug is wet or converted with carbon, check for fuel leak from injector. If spark plug is grayish white, check for clogged fuel injector.
		No	Install spark plugs on original cylinders. Go to next step.
10	Start engine and disconnect IAC valve connector. Does rpm drop or the engine stall?	Yes	Go to next step.
		No	Check IAC valve and wiring harness.
11	Install fuel pressure gauge between fuel filter and fuel distributor. Start engine and run at idle. Measure fuel line pressure at idle. Is fuel line pressure correct at idle? **Fuel line pressure** **210—260 kPa** **{2.1—2.6 kgf/cm^2, 30—37 psi}**	Yes	Go to next step.
		No	**Zero or low:** Check fuel pump circuit. Check for open fuel pump relief valve. Check for fuel leak inside pressure regulator. Check for clogged main fuel line. **High:** Check pressure regulator for high pressure cause. Check for clogged fuel return line.
12	Visually check for fuel leakage at fuel injector O-ring, pressure regulator and fuel line. Service as necessary. Does fuel line pressure hold after ignition switch is turned off? **Fuel line pressure** **More than 150 kPa** **{1.5 kgf/cm^2, 21 psi} for 5 minutes**	Yes	Go to next step.
		No	Check pressure regulator diaphragm condition. If condition is okay, check fuel injector. If condition is not okay, replace pressure regulator.

STEP	INSPECTION		ACTION
13	Connect NGS tester to DLC. Start engine and run it at idle. Access LONGFT1 PID. Measure LONGFT1 PID at idle. Is PID value between 22— –23%?	Yes	Go to next step.
		No	LONGFT1 PID is out of specification. **Less than specification (too rich):** Check evaporative emission control system. If system is okay, go to step 15. **Greater than specification (too lean):** Check for air leakage at intake air system components. If system is okay, go to next step.
14	Disconnect vacuum hose between purge solenoid valve and intake manifold from solenoid side. Plug open end of vacuum hose. Start engine. Does engine condition improve?	Yes	Check if purge solenoid valve sticks open mechanically. Check evaporative emission control system.
		No	Go to next step.
15	Remove and shake PCV valve. Does PCV valve rattle?	Yes	Go to next step.
		No	Replace PCV valve.
16	Is there a restriction in the exhaust system?	Yes	Check exhaust system.
		No	Go to next step.
17	Visually inspect camshaft position (CMP) sensor and tooth of camshaft. Is CMP sensor and tooth of camshaft okay?	Yes	Go to next step.
		No	Replace malfunctioning part.
18	Check the engine condition while tapping EGR valve housing. Does engine condition improve?	Yes	Replace EGR valve.
		No	Go to next step.
19	Is engine compression correct?	Yes	Check valve timing.
		No	Check for causes.
20	Verify test results. If okay, return to diagnostic index to service any additional symptoms.		

8	FAST IDLE/RUNS ON
DESCRIPTION	• Engine speed continues at fast idle after warm-up • Engine runs after ignition switch is turned off
POSSIBLE CAUSE	• Engine coolant temperature malfunction • Air leak from intake air system • Throttle body malfunction • Misadjustment of accelerator cable free play • Misadjustment of cruise control cable

STEP	INSPECTION		ACTION
1	Connect NGS tester to DLC. Access ECT PID. Start and warm-up engine to normal operating temperature. Is ECT PID reading between 112 °C {233.6 °F} and 82 °C {179.6 °F}?	Yes	Go to next step.
		No	If ECT PID is higher than 112 °C {233.6 °F}: Go to flow chart 17 for engine overheating. If ECT PID is less than 82 °C {179.6 °F}: Go to flow chart 18 for runs cold condition.
2	Retrieve and record any continuous memory, KOEO and KOER DTCs. Are there any DTCs displayed?	Yes	Go to appropriate DTC test.
		No	No DTC displayed. Go to next step.
3	Is there air leakage felt or heard at intake air system components while racing engine to higher speed?	Yes	Repair or replace parts as necessary.
		No	Verify accelerator and/or cruise control cable free play.
4	Verify test results. If okay, return to diagnostic index to service any additional symptoms.		

9	LOW IDLE/STALLS DURING DECELERATION
DESCRIPTION	Engine stops unexpectedly at beginning of deceleration or recovery from deceleration
POSSIBLE CAUSE	• Vacuum leaks • IAC valve malfunction • Air leak from intake air system • Throttle position sensor or related circuit malfunction • Mass air flow sensor or related circuit malfunction • Brake switch or related circuit malfunction • Clutch position and/or neutral switch or related circuit malfunction

STEP	INSPECTION		ACTION
1	Does engine idle rough?	Yes	Go to flow chart 7 for "ENGINE RUNS ROUGH/ROLLING IDLE".
		No	Go to next step.
2	Check following: • Proper routing and no damage of vacuum lines. • IAC valve properly connected. • No air leak from intake air system. Are all items okay?	Yes	Go to next step.
		No	Service as necessary. Repeat step 2.
3	Retrieve and record any continuous memory, KOEO and KOER DTCs. Are there any DTCs displayed?	Yes	Go to appropriate DTC test.
		No	Go to next step.
4	Does idle speed drop or stall when disconnecting IAC valve?	Yes	Go to next step.
		No	Check following: • Circuit from idle air control valve to PCM for open and short. • Idle air control valve for sticking. If okay, go to next step.
5	Disconnect vacuum hose between purge solenoid valve and intake manifold from solenoid valve side. Plug opening end of vacuum hose. Drive vehicle. Does engine condition improve?	Yes	Check evaporative emission control system.
		No	Go to next step.
6	Connect NGS tester to data DLC. Access TP V PID, MAF PID, TCCA PID, BOO PID and CPP/PNP PID. Monitor each PID while driving vehicle. • TP V PID. ☞ 01–40A THROTTLE POSITION SENSOR INSPECTION [FS] • MAF PID. ☞ 01–40A MASS AIR FLOW SENSOR INSPECTION [FS] • BOO PID. ☞ 04–11 BRAKE SWITCH INSPECTION • CPP/PNP PID. ☞ 01–40A NEUTRAL SWITCH INSPECTION [FS] ☞ 01–40A CLUTCH SWITCH INSPECTION [FS] • TCC PID. ☞ 05–17A ELECTRICAL SYSTEM COMPONENT [LA4A-EL], Torque Converter Clutch Inspection Are PIDs okay?	Yes	Go to flow chart 27 for "Intermittent concerns".
		No	TP V PID: Check for TP sensor. MAF PID: Check for mass air flow sensor. TCC PID: Check TCC solenoid valve. BOO PID: Check brake on/off switch. CPP/PNP PID: Check clutch and neutral switches.
7	Verify test results. If okay, return to diagnostic index to service any additional symptoms.		

10	**ENGINE STALLS/QUITS (ACCELERATION/CRUISE)** **ENGINE RUNS ROUGH (ACCELERATION/CRUISE)** **MISSES (ACCELERATION/CRUISE)** **BUCK/JERK (ACCELERATION/CRUISE/DECELERATION)** **HESITATION/STUMBLE (ACCELERATION)** **SURGES (ACCELERATION/CRUISE)**
DESCRIPTION	• Engine stops unexpectedly at beginning of or during acceleration • Engine stops unexpectedly while cruising • Engine speed fluctuates during or cruising • Engine misses during acceleration or cruising • Vehicle bucks/jerks during acceleration, cruising or deceleration • Momentary pause at beginning of acceleration or during acceleration • Momentary minor irregularity in engine output
POSSIBLE CAUSE	• A/C system improperly operation • Air leak from intake air system parts • Improper operation of IAC valve • Erratic signal from crankshaft position sensor • Vacuum leaks • Spark leak from hightension leads • PCV valve malfunction • Restriction in exhaust system • Inadequate fuel pressure • Fuel leak from fuel injector • Intermittent open or short of mass-airflow sensor, throttle position sensor and vehicle speed sensor • Automatic transaxle malfunction • Erratic signal or no signal from camshaft position sensor • Purge solenoid valve malfunction • EGR valve malfunction • Low engine compression • Poor fuel quality • Air cleaner restriction • Improper valve timing due to jumping out timing belt • Intermittently open/short in fuel pump circuit • Fuel pump mechanical malfunction • Fuel injector clogged • Clutch slippage **Warning** **Following troubleshooting flow chart contains fuel system diagnosis and repair procedures. Read following warnings before performing fuel system service:** • **Fuel vapor is hazardous. It can easily ignite, causing serious injury and damage. Always keep sparks and flames away from fuel.** • **Fuel line spills and leaks are dangerous. Fuel can ignite and cause serious injuries or death and damage. Fuel can also irritate skin and eyes. To prevent this, always complete "BEFORE REPAIR PROCEDURE" and "AFTER REPAIR PROCEDURE" described in this manual.** **☞ 01–14 BEFORE REPAIR PROCEDURE** **☞ 01–14 AFTER REPAIR PROCEDURE**

STEP	INSPECTION		ACTION
1	Verify following: • Vacuum connection. • Air cleaner element. • No air leaks from intake air system. • No restriction of intake air system. • Proper sealing of intake manifold and components attached to intake manifold: EGR valve, IAC valve. • Ignition wiring. • Fuel quality: Proper octane, contamination, winter/summer blend. • Electrical connections. Are all items okay?	Yes	Go to next step.
		No	Service as necessary and repeat step 1.
2	Retrieve and record any continuous memory, KOEO and KOER DTCs. If stall, condition exists retrieve continuos memory and KOEO DTCs. Are there any DTCs displayed?	Yes	Go to appropriate DTC test.
		No	Go to next step.

STEP	INSPECTION		ACTION
3	Is engine overheating?	Yes	Go to flowchart 17 for "COOLING SYSTEM CONCERNS OVERHEATING".
		No	Go to next step.
4	Connect NGS tester to DLC. Access RPM PID, VPWR PID, VREF PID, MAF PID, TP V PID, and VSS PID. Drive vehicle with monitoring PIDs. • VPWR PID: Battery voltage. • PRM PID: Idle speed at idle. • MAF PID. ☞ 01–40A MASS AIR FLOW SENSOR INSPECTION [FS] • TP V PID. ☞ 01–40A THROTTLE POSITION SENSOR INSPECTION [FS] • VSS PID. ☞ 05–17A VEHICLE SPEED SENSOR INSPECTION [LA4A-EL] Are PIDs within specification?	Yes	Go to next step.
		No	RPM PID: Check crankshaft position (CKP) sensor and related harness; such as vibration, intermittent open/short circuit. VPWR PID/VREF PID: Check for open circuit intermittently. MAF PID: Check for open circuit of mass air flow sensor and related wire harness intermittently. TP V PID: Check if output signal from throttle sensor changes smoothly. VSS PID: Check for open circuit of vehicle speed sensor and related wire harness intermittently.
5	Visually inspect crankshaft position (CKP) sensor and teeth of crankshaft pulley. Is CKP sensor and teeth of crankshaft pulley okay?	Yes	Go to next step.
		No	Replace malfunctioning part.
6	Measure gap between crankshaft position (CKP) sensor and teeth of crankshaft pulley. **Specification** **0.5—1.5 mm {0.02—0.05 in}** Is gap within specifications?	Yes	Go to next step.
		No	Adjust CKP sensor.
7	Check spark plug conditions. Is spark plug wet, converted with carbon or grayish white?	Yes	If spark plug is wet or converted with carbon, check for fuel leak from fuel injector. If spark plug is grayish white, check for clogged fuel injector.
		No	Install spark plugs on original cylinders. Go to next step.
8	Remove PCV valve and shake PCV valve. Does PCV valve rattle?	Yes	Go to next step.
		No	Replace PCV valve.
9	Check that throttle lever is resting on throttle valve stop screw and/or throttle valve orifice plug. Is lever in correct position?	Yes	Go to next step.
		No	Adjust as necessary.
10	Are there restrictions in the exhaust system?	Yes	Check exhaust system.
		No	Go to next step.
11	Install fuel gauge between fuel filter and fuel distributor. Connect NGS tester to DLC. Select "ALL ON" in OUTPUT TEST MODE and press start. Is fuel line pressure correct with ignition switch ON? **Fuel line pressure** **260—310 kPa** **{2.6—3.2 kgf/cm^2, 37—46 psi}**	Yes	Go to next step.
		No	**Zero or low:** Check fuel pump circuit. Check for open fuel pump relief valve. Check for fuel leak inside pressure regulator. Check for clogged main fuel line. **High:** Check pressure regulator for high pressure cause. Check for clogged fuel return line.
12	Visually check for fuel leakage at fuel injector O-ring, pressure regulator, and fuel line. Service as necessary. Does fuel line pressure hold after ignition switch is turned off? **Fuel line pressure** **More than 150 kPa** **{1.5 kgf/cm^2, 21 psi} for 5 minutes**	Yes	Go to next step.
		No	Check pressure regulator diaphragm condition. If condition is okay, check fuel injector. If condition is not okay, replace pressure regulator.

STEP	INSPECTION		ACTION
13	**Note** • The following test is for engine stalling with A/C on concern. If other symptom exists, go to next step. Connect a pressure gauge to A/C low and high pressure side lines. Turn A/C on and measure low side and high side pressure. Are pressure within specifications? ☞ 07–10 REFRIGERANT PRESSURE CHECK	Yes	Go to next step.
		No	Check follows: • Refrigerant charging amount. • A/C pressure switches. • Additional fan operation. • A/C relay.
14	**Note** • The following test is performed for symptom with cruise control ON. If other symptoms exist, go to next step. Check cruise control system. Is cruise control system okay?	Yes	Go to next step.
		No	Repair or replace.
15	Disconnect vacuum hose between purge solenoid valve and intake manifold from solenoid valve side. Plug opening end of vacuum hose. Drive vehicle. Does engine condition improve?	Yes	Check if purge solenoid valve sticks open mechanically. Check evaporative emission control system.
		No	Go to next step.
16	Visually inspect camshaft position (CMP) sensor and tooth of camshaft. Is CMP sensor and tooth of camshaft okay?	Yes	Go to next step.
		No	Replace malfunctioning part.
17	Is engine compression correct? ☞ 01–10A COMPRESSION INSPECTION [FS]	Yes	Check following: • Valve timing. • Internal transaxle component (ATX only). • Clutch (MTX only).
		No	Check for cause.
18	Verify test results. If okay, return to diagnostic index to service any additional symptoms.		

11	LACK/LOSS OF POWER – ACCELERATION/CRUISE
DESCRIPTION	Performance poor under load (i.e., power down when climbing hills)
POSSIBLE CAUSE	• Improper A/C system operation • Air leak from intake air system parts • EGR valve malfunction • Erratic signal from crankshaft position sensor • Vacuum leaks • Spark leak from hightension leads • PCV valve malfunction • Restriction in exhaust system • Inadequate fuel pressure • Fuel leak from injector • Intermittent open or short of mass air flow sensor, throttle position sensor and vehicle speed sensor • Automatic transaxle malfunction • Erratic signal or no signal from camshaft position sensor • Purge solenoid valve malfunction • Brake dragging • Low engine compression • Poor fuel quality • Air cleaner restriction • Improper valve timing due to timing belt jump • Intermittent open/short in fuel pump circuit • Fuel pump mechanical malfunction • Fuel injector clogged • Clutch slippage **Warning** **Following troubleshooting flow chart contains fuel system diagnosis and repair procedures. Read following warnings before performing fuel system service:** • **Fuel vapor is hazardous. It can easily ignite, causing serious injury and damage. Always keep sparks and flames away from fuel.** • **Fuel line spills and leaks are dangerous. Fuel can ignite and cause serious injuries or death and damage. Fuel can also irritate skin and eyes. To prevent this, always complete "BEFORE REPAIR PROCEDURE" and "AFTER REPAIR PROCEDURE" described in this manual.** **☞ 01–14 BEFORE REPAIR PROCEDURE** **☞ 01–14 AFTER REPAIR PROCEDURE**

STEP	INSPECTION		ACTION
1	Verify following: • Vacuum connection. • Air cleaner element. • No air leaks from intake air system. • No restriction of intake air system. • Proper sealing of intake manifold and components attached to intake manifold: EGR valve, IAC control. • Fuel quality: Proper octane, contamination, winter/summer blend. Are all items okay?	Yes	Go to next step.
		No	Service as necessary and repeat step 1.
2	Retrieve and record any continuous memory, KOEO and KOER DTCs. If engine stall condition exists, retrieve continuos memory and KOEO DTCs. Are there any DTCs displayed?	Yes	Go to appropriate DTC test.
		No	Go to next step.
3	Is engine overheating?	Yes	Go to flowchart 17 for "COOLING SYSTEM CONCERNS OVERHEATING".
		No	Go to next step.

STEP	INSPECTION		ACTION
4	Connect NGS tester to DLC. Access RPM PID, MAF PID, TP V PID, and VSS PID. Drive vehicle with monitoring PIDs. • PRM PID: Engine speed. • MAF PID. ☞ 01–40A MASS AIR FLOW SENSOR INSPECTION [FS] • TP V PID. ☞ 01–40A THROTTLE POSITION SENSOR INSPECTION [FS] • VSS PID. ☞ 05–17A VEHICLE SPEED SENSOR INSPECTION [LA4A-EL] Are PIDs within specification?	Yes	Go to next step.
		No	RPM PID: Check CKP sensor and related harness for vibration and/or intermittent open/short circuit. MAF PID: Check for intermittent open circuit of mass air flow sensor and related wire harness. TP V PID: Check if TP sensor output increases smoothly. VSS PID: Check for intermittent open circuit of vehicle speed sensor and related wire harness.
5	Visually inspect crankshaft position (CKP) sensor and teeth of crankshaft pulley. Is CKP sensor and teeth of crankshaft pulley okay?	Yes	Go to next step.
		No	Replace malfunctioning part.
6	Measure gap between CKP sensor and teeth of crankshaft pulley. **Specification** **0.5—1.5 mm {0.02—0.05 in}** Is gap within specifications?	Yes	Go to next step.
		No	Adjust CKP sensor.
7	Check spark plug conditions. Is spark plug wet, converted with carbon or grayish white?	Yes	If spark plug is wet or converted with carbon, check for fuel leak from fuel injector. If spark plug is grayish white, check for clogged fuel injector.
		No	Install spark plugs on original cylinders. Go to next step.
8	Remove and shake PCV valve. Does PCV valve rattle?	Yes	Go to next step.
		No	Replace PCV valve.
9	Are there restrictions in exhaust system?	Yes	Check exhaust system.
		No	Go to next step.
10	Install fuel gauge between fuel filter and fuel distributor. Connect NGS tester to DLC. In OUTPUT TEST MODE select "ALL ON" and press start. Is fuel line pressure correct with ignition switch ON? **Fuel line pressure** **260—310 kPa** **{2.6—3.2 kgf/cm^2, 37—46 psi}**	Yes	Go to next step.
		No	**Zero or low:** Check fuel pump circuit. Check for open fuel pump relief valve. Check for fuel leak inside pressure regulator. Check for clogged main fuel line. **High:** Check pressure regulator for high pressure cause. Check for clogged fuel return line.
11	**Note** • Following test is for engine stalling concern with A/C on concern. If other symptom exists, go to next step. Connect pressure gauge to A/C low and high side pressure lines. Turn A/C on and measure low and high side pressures. Are pressures within specifications? ☞ 07–10 REFRIGERANT PRESSURE CHECK	Yes	Go to next step.
		No	Check follows: • Refrigerant charging amount. • A/C pressure switches. • Additional fan operation. • A/C relay.
12	Check for A/C cut off operation. Does A/C cut-off work properly?	Yes	Go to next step.
		No	Check A/C cut off system.

STEP	INSPECTION		ACTION
13	Disconnect vacuum hose between purge solenoid valve and intake manifold from purge valve side. Plug opening end of vacuum hose. Drive vehicle. Does engine condition improve?	Yes	Check if purge solenoid valve sticks open mechanically. Check evaporative emission control system.
		No	Go to next step.
14	Visually inspect camshaft position (CMP) sensor and tooth of camshaft. Is CMP sensor and tooth of camshaft okay?	Yes	Go to next step.
		No	Replace malfunctioning part.
15	Is engine compression correct? ☞ 01–10A COMPRESSION INSPECTION [FS]	Yes	Check following: • Valve timing. • Internal transaxle component (ATX only). • Clutch (MTX only). • Brake system for dragging.
		No	Check for cause.
16	Verify test results. If okay, return to diagnostic index to service any additional symptoms.		

12	KNOCKING/PINGING – ACCELERATION/CRUISE
DESCRIPTION	Sound produced when air/fuel mixture is ignited by something other than spark plug (i.e., hot spot in combustion chamber)
POSSIBLE CAUSE	• Engine overheating due to cooling system malfunction • Inadequate engine compression • Inadequate fuel pressure • Knock sensor and related circuit malfunction **Warning** **Following troubleshooting flow chart contains fuel system diagnosis and repair procedures. Read following warnings before performing fuel system service:** • **Fuel vapor is hazardous. It can easily ignite, causing serious injury and damage. Always keep sparks and flames away from fuel.** • **Fuel line spills and leaks are dangerous. Fuel can ignite and cause serious injuries or death and damage. Fuel can also irritate skin and eyes. To prevent this, always complete "BEFORE REPAIR PROCEDURE" and "AFTER REPAIR PROCEDURE" described in this manual.** **☞ 01–14 BEFORE REPAIR PROCEDURE** **☞ 01–14 AFTER REPAIR PROCEDURE**

STEP	INSPECTION		ACTION
1	Connect NGS tester to DLC. Access ECT PID. Verify ECT PID is less than 116 °C {240.8 °F} during driving. Is ECT PID less than specification?	Yes	Go to next step.
		No	Inspect cooling system for cause of overheating.
2	Retrieve and record any continuous memory, KOEO and KOER DTCs. Are there any DTCs displayed?	Yes	Go to appropriate DTC test.
		No	Go to next step.
3	Is engine compression correct?	Yes	Go to next step.
		No	Check for cause.
4	Install fuel pressure gauge between fuel filter and fuel distributor. Start engine and run at idle. Measure fuel line pressure at idle. Is fuel line pressure correct at idle? **Fuel line pressure** **210—260 kPa** **{2.1—2.6 kgf/cm², 30—37 psi}**	Yes	Go to next step.
		No	**Zero or low:** Check fuel pump circuit. Check for open fuel pump relief valve. Check for fuel leak inside pressure regulator. Check for clogged main fuel line. **High:** Check pressure regulator for high pressure cause. Check for clogged fuel return line.
5	Measure resistance between knock sensor terminal and knock sensor body. **Specification** **Approx. 560 kΩ [20 °C {68 °F}]** Is resistance okay?	Yes	Check ignition timing.
		No	Replace knock sensor.
6	Verify test results. If okay, return to diagnostic index to service any additional symptoms.		

13	POOR FUEL ECONOMY
DESCRIPTION	Fuel economy unsatisfactory
POSSIBLE CAUSE	• Contaminated air cleaner element • Improper transmission fluid level • Poor fuel quality • Improper coolant level • Spark plug malfunction • Brake dragging • Contaminated mass airflow sensor • Exhaust system clogged • Engine cooling system malfunction • Weak spark • Erratic or no signal from camshaft position sensor • Inadequate fuel pressure • PCV valve malfunction • Improper valve timing due to timing belt skip out • Improper engine compression **Warning** **Following troubleshooting flow chart contains fuel system diagnosis and repair procedures. Read following warnings before performing fuel system service:** • **Fuel vapor is hazardous. It can easily ignite, causing serious injury and damage. Always keep sparks and flames away from fuel.** • **Fuel line spills and leaks are dangerous. Fuel can ignite and cause serious injuries or death and damage. Fuel can also irritate skin and eyes. To prevent this, always complete "BEFORE REPAIR PROCEDURE" and "AFTER REPAIR PROCEDURE" described in this manual.** **☞ 01–14 BEFORE REPAIR PROCEDURE** **☞ 01–14 AFTER REPAIR PROCEDURE**

STEP	INSPECTION		ACTION
1	Check following: • Contaminated air cleaner element. • Transmission fluid level. • Fuel quality. • Coolant level. Are all items okay?	Yes	Go to next step.
		No	Service as necessary. Repeat step 1.
2	Retrieve and record any continuous memory, KOEO and KOER DTCs. Are there any DTCs displayed?	Yes	Go to appropriate DTC test.
		No	Go to next step.
3	Connect NGS tester to DLC. Access ECT PID. Drive vehicle while monitoring PID. • ECT PID. ☞ 01–40A ENGINE COOLANT TEMPERATURE SENSOR INSPECTION [FS] Is PID within specification?	Yes	Go to next step.
		No	Check for coolant leak, cooling fan and condenser fan operation or thermostat operation.
4	Is strong blue spark visible at each disconnected high-tension lead while cranking engine?	Yes	Check follows: • Spark plug(s) malfunction. • CMP sensor improperly installed. • Trigger wheel damage on camshaft. • Open or short circuit on CMP sensor. • Open or short circuit between CMP sensor and PCM. Repair or replace malfunctioning part. If okay, go to next step.
		No	Check follows: • High-tension leads. • Ignition coil and connector.

STEP	INSPECTION		ACTION
5	Install fuel pressure gauge between fuel filter and fuel distributor. Start engine and run at idle. Measure fuel line pressure at idle. Is fuel line pressure correct at idle? **Fuel line pressure** **210—260 kPa** **{2.1—2.6 kgf/cm^2, 30—37 psi}**	Yes	Go to next step.
		No	**Zero or low:** Check fuel pump circuit. Check for open fuel pump relief valve. Check for fuel leak inside pressure regulator. Check for clogged main fuel line. **High:** Check pressure regulator for high pressure cause. Check for clogged fuel return line.
6	Remove and shake PCV valve. Does PCV valve rattle?	Yes	Go to next step.
		No	Replace PCV valve.
7	Is there restriction in exhaust system?	Yes	Check exhaust system.
		No	Go to next step.
8	Is brake system functioning properly?	Yes	Go to next step.
		No	Check for cause.
9	Check for contaminated MAF sensor. Is there any contamination?	Yes	Replace mass air flow sensor.
		No	Go to next step.
10	Is engine compression correct?	Yes	Check for valve timing.
		No	Check for cause.
11	Verify test results. If okay, return to diagnostic index to service any additional symptoms.		

14	EMISSION COMPLIANCE
DESCRIPTION	Emission compliance test is failed
POSSIBLE CAUSE	• Vacuum lines leaks or blockage • Spark plug malfunction • Erratic or no signal from camshaft position sensor • PCV valve malfunction or incorrect valve installation • Exhaust system clogged • Charcoal canister damage • Improper engine compression • Cooling system malfunction • Leaks from intake manifold • Inadequate fuel pressure • EGR valve malfunction • Fuel tank ventilation system malfunction • Excessive carbon build up in combustion chamber • Improper valve timing **Warning** **Following troubleshooting flow chart contains fuel system diagnosis and repair procedures. Read following warnings before performing fuel system service:** • **Fuel vapor is hazardous. It can easily ignite, causing serious injury and damage. Always keep sparks and flames away from fuel.** • **Fuel line spills and leaks are dangerous. Fuel can ignite and cause serious injuries or death and damage. Fuel can also irritate skin and eyes. To prevent this, always complete "BEFORE REPAIR PROCEDURE" and "AFTER REPAIR PROCEDURE" described in this manual.** **☞ 01–14 BEFORE REPAIR PROCEDURE** **☞ 01–14 AFTER REPAIR PROCEDURE**

STEP	INSPECTION		ACTION
1	Check following: • Vacuum lines for leaks or blockage. • Electrical connections. • Proper maintenance schedule followed. • Intake air system and air cleaner element concerns: obstructions, leaks or dirty. Are all items okay?	Yes	Go to next step.
		No	Service as necessary. Repeat step 1.
2	Retrieve and record any continuous memory, KOEO and KOER DTCs. Are there any DTCs displayed?	Yes	Go to appropriate DTC test.
		No	Go to next step.
3	Is any other drivability concern present?	Yes	Go to appropriate flow chart.
		No	Go to next step.
4	Connect NGS tester to DLC. Access ECT PID. Warm-up engine and run at idle. Verify ECT PID is correct. • ECT PID. ☞ 01–40A ENGINE COOLANT TEMPERATURE SENSOR INSPECTION [FS] Is ECT PID correct?	Yes	Go to next step.
		No	Check cooling system.
5	Is strong blue spark visible at each disconnected hightension lead while cranking engine?	Yes	Check following: • Spark plug(s) malfunction. • CMP sensor improperly installated. • Damage of trigger wheel on camshaft. • Open or short circuit on CMP sensor. • Open or short circuit between CMP sensor and PCM. Repair or replace malfunctioning part. If okay, go to next step.
		No	Check following: • Hightension leads. • Ignition coil and connector.

STEP	INSPECTION		ACTION
6	Install fuel pressure gauge between fuel filter and fuel distributor. Start engine and run it at idle. Measure fuel line pressure at idle. Is fuel line pressure correct at idle? **Fuel line pressure** **210—260 kPa** **{2.1—2.6 kgf/cm^2, 30—37 psi}**	Yes	Go to next step.
		No	**Zero or low:** Check fuel pump circuit. Check for open fuel pump relief valve. Check for fuel leak inside pressure regulator. Check for clogged main fuel line. **High:** Check pressure regulator for high pressure cause. Check for clogged fuel return line.
7	Does fuel line pressure remain at specification for 60 seconds when ignition switch is turned ON? **Fuel line pressure** **210—260 kPa** **{2.1—2.6 kgf/cm^2, 30—37 psi}**	Yes	Go to next step.
		No	Check pressure regulator for high pressure cause.
8	Remove and shake PCV valve. Does PCV valve rattle?	Yes	Go to next step.
		No	Replace PCV valve.
9	Check for fuel saturation inside charcoal canister. Is excess amount of liquid fuel present in canister?	Yes	Replace charcoal canister.
		No	Check fuel tank vent system. Go to next step.
10	Is there a restriction in the exhaust system?	Yes	Check exhaust system.
		No	Go to next step.
11	Check engine condition while tapping EGR valve housing. Does engine condition improve?	Yes	Replace EGR valve.
		No	Go to next step.
12	Verify test results. If okay, return to diagnostic index to service any additional symptoms.		

15	MIL NEVER ON
DESCRIPTION	Malfunction indicator light never on
POSSIBLE CAUSE	• MIL burned out • Blown fuse • Open circuit between battery to PCM • Open between ground and PCM • Open or short to power between MIL and PCM • Open printed circuit on instrument cluster

STEP	INSPECTION		ACTION
1	Is ROOM fuse burnt?	Yes	Repair wiring harness and replace fuse.
		No	Go to next step.
2	Connect NGS tester to DLC. Access MIL PID. Turn ignition switch ON. Does MIL PID read ON?	Yes	Go to next step.
		No	Check for open circuit between PCM and battery or ground.
3	Is there correct voltage at MIL fuse? **Specification** **More than 10.5 V**	Yes	Go to next step.
		No	Repair open in wiring harness between fuse block and ignition switch.
4	Remove MIL bulb. Is voltage correct on positive side of MIL bulb socket? **Specification** **More than 10.5 V**	Yes	Go to next step.
		No	Repair open circuit in wiring harness between fuse block and MIL bulb socket.
5	Apply 12 volts and ground to MIL bulb. Does MIL illuminate?	Yes	Check for open circuit between MIL and PCM. If wire harness is okay, replace PCM.
		No	Replace MIL bulb.

16	HIGH OIL CONSUMPTION/LEAKS
DESCRIPTION	Oil consumption excessive
POSSIBLE CAUSE	• PCV valve malfunction • Improper engine oil viscosity • Improper dipstick • Engine internal part malfunction

STEP	INSPECTION		ACTION
1	Remove and shake PCV valve. Does PCV valve rattle?	Yes	Go to next step.
		No	Replace PCV valve.
2	Check following: • External leaks. • Proper dipstick. • Proper engine oil viscosity. Are all items okay?	Yes	Check internal engine parts such as valves, valve guides, valve stem seals, cylinder head drain passage, piston rings.
		No	Service as necessary. Repeat step 2.

17	COOLING SYSTEM CONCERNS OVERHEATING
DESCRIPTION	Engine runs at higher than normal temperature/Overheats
POSSIBLE CAUSE	• Improper coolant level • Coolant leaks • Improper water/anti-freeze mixture • Poor radiator condition • Radiator hose(s) damage • Improper or damaged radiator cap • Malfunction of coolant overflow system • Drive belt damage • Blown fuses • Excessive A/C system pressure • Fans reverse rotation • Thermostat malfunction • Condenser fan inoperative • Main cooling fan inoperative • Improper tension of drive belt

STEP	INSPECTION		ACTION
1	Check following: • Engine coolant level. • Coolant leaks. • Water and anti-freeze mixture. • Radiator condition. • Collapsed or restricted radiator hoses. • Radiator pressure cap. • Overflow system. • Fan rotational direction. • Fuses. Are all items okay?	Yes	Go to next step.
		No	Service as necessary. Repeat step 1.
2	Cool down engine. Turned A/C switch OFF. Connect NGS tester to DLC. Access ECT V PID. Start engine and record ECT voltage reading every 60 seconds. **Note** • When ECT voltage reverses direction trend or changes slightly (0.03 volt or less), thermostat has opened. Is thermostat opening voltage okay? **Thermostat operating voltage** **Approx. 0.6—0.9 V**	Yes	Engine coolant temperature and thermostat are okay. Go to next step.
		No	Remove thermostat from engine and verify operation. If temperature gauge on instrument cluster indicates normal operation but ECT V is not same as temperature gauge reading, check engine coolant temperature sensor. If temperature gauge on instrument cluster indicated overheating but ECT V is normal, check temperature gauge and heat gauge unit.
3	Retrieve and record any continuous memory, KOEO and KOER DTCs. Are there any diagnostic trouble code displayed?	Yes	Go to appropriate DTC test.
		No	Go to next step.
4	Start engine and run at idle. Turn A/C switch on. Does A/C compressor engage?	Yes	Go to step 6.
		No	Check following and repair or replace as necessary: • Refrigerant charging amount. • Open circuit between A/C magnet clutch and PCM. • Seized A/C magnet clutch. • A/C magnet clutch malfunction. If all items are okay, go to next step.
5	Connect NGS tester to DLC. Access ACCS PID on NGS tester. Start engine and run at idle. Turn A/C switch on. Does ACCS PID read ON?	Yes	Go to next step.
		No	Check follows: • A/C pressure switch(es) operation. • A/C switch stuck open. • Open or short circuit between A/C pressure switch and PCM.

STEP	INSPECTION		ACTION
6	Start the engine and run it at idle speed. Turn A/C switch on. Do condenser fan and cooling fan operate?	Yes	Go to next step.
		No	**If condenser fan does not operate, check following:** Condenser fan relay stuck open. Condenser fan motor malfunction. Condenser fan motor ground open. Open circuit between condenser fan motor and relay. Open circuit between condenser fan relay and PCM. Open battery power circuit for condenser fan relay. **If cooling fan motor does not operate, check following:** Cooling fan relay stuck to open. Cooling fan motor malfunction. Cooling fan motor ground open. Open circuit between cooling fan motor and relay. Open circuit between cooling fan relay and PCM. Open battery power circuit for cooing fan relay.
7	Is drive belt okay?	Yes	Go to next step.
		No	Replace drive belt.
8	Are there any leaks around heater unit in passenger compartment?	Yes	Check and service heater unit for leaks.
		No	Go to next step.
9	Are there any leaks at coolant hoses and/or radiator?	Yes	Replace malfunctioning part.
		No	Inspect engine block for leaks or blockage.
10	Verify test results. If okay, return to diagnostic index to service any additional symptoms.		

18	COOLING SYSTEM CONCERNS RUNS COLD
DESCRIPTION	Engine takes excessive period for reaching normal operating temperature
POSSIBLE CAUSE	• Thermostat malfunction • Malfunction of cooling fan system • Malfunction of condenser fan system

STEP	INSPECTION		ACTION
1	Is customer's any complaint "Lack of passenger compartment heat"?	Yes	Check A/C and heater system.
		No	Go to next step.
2	Does engine speed continue at fast idle?	Yes	Go to flowchart 8 for "FAST IDLE/RUNS ON".
		No	Go to next step.
3	Connect NGS tester to DLC. Access ECT V PID. Start engine and record ECT voltage reading every 60 seconds. **Note** • When ECT voltage reverses direction trend or changes slightly (0.03 volt or less), thermostat has opened. Is thermostat opening voltage okay? **Thermostat operating voltage** **Approx. 0.6—0.9 V**	Yes	Check condenser fan and cooling fan operation. If both or either fan operate abnormally, check follows: • Cooling fan relay stuck to close. • Condenser fan relay stuck to close. • Short to ground between cooling fan relay and PCM. • Short to ground between condenser fan relay and PCM. • Circuit between cooling fan relay and fan motor shorts to battery supply line. • Circuit between condenser fan relay and fan motor shorts to battery supply line.
		No	Remove thermostat from engine and verify thermostat operation. If temperature gauge on instrument cluster indicates, normal range but ECT V is not same as temperature gauge reading check ECT sensor. If temperature gauge on instrument cluster indicates range cold but ECT voltage is normal, check temperature gauge and heat gauge unit.
4	Verify test results. If okay, return to diagnostic index to service any additional symptoms.		

19	EXHAUST SMOKE
DESCRIPTION	Blue, black, or white smoke from exhaust system
POSSIBLE CAUSE	Blue smoke (Burning oil) • PCV valve malfunction • Internal engine oil leaks White smoke (Water in combustion) • Malfunction of cooling system (coolant loss) • Internal engine coolant leaks Black smoke (Rich fuel mixture) • Air cleaner restricted • Fuel return line restricted • Improper engine compression • Ignition system malfunction • Intake air system collapsed or restricted • Excessive fuel pressure • Injector fuel leaks **Warning** **Following troubleshooting flow chart contains fuel system diagnosis and repair procedures. Read following warnings before performing fuel system service:** • **Fuel vapor is hazardous. It can easily ignite, causing serious injury and damage. Always keep sparks and flames away from fuel.** • **Fuel line spills and leaks are dangerous. Fuel can ignite and cause serious injuries or death and damage. Fuel can also irritate skin and eyes. To prevent this, always complete "BEFORE REPAIR PROCEDURE" and "AFTER REPAIR PROCEDURE" described in this manual.** **☞ 01–14 BEFORE REPAIR PROCEDURE** **☞ 01–14 AFTER REPAIR PROCEDURE**

STEP	INSPECTION		ACTION
1	What color is smoke coming from exhaust system?	Blue	Burning oil indicated. Go to next step.
		White	Water in combustion indicated. Go to step 3.
		Black	Rich fuel mixture indicated. Go to step 4.
2	Remove and shake PCV valve. Does PCV valve rattle?	Yes	Check following: • Damaged valve guide, stems or valve seals. • Blocked oil drain passage in cylinder head. • Piston rings for not seated, seized or worn. • Damaged cylinder bore. If other driveability symptoms are present, return to diagnostic index to service any additional symptoms.
		No	Replace PCV valve.
3	Does cooling system hold pressure?	Yes	Check following: • Cylinder head gasket leaks. • Intake manifold gasket leaks. • Engine block cracked or porous. If other driveability symptoms are present, return to diagnostic index to service any additional symptoms.
		No	Check for cause.
4	Check following: • Air cleaner for restriction. • Collapsed or restricted intake air system. • Restricted fuel return line. Are all items okay?	Yes	Go to next step.
		No	Service as necessary. Repeat step 5.
5	Retrieve and record any continuous memory, KOEO and KOER DTCs. Are there any DTCs displayed?	Yes	Go to appropriate DTC test.
		No	Go to next step.

STEP	INSPECTION		ACTION
6	Install fuel pressure gauge between fuel filter and fuel distributor. Start engine and run at idle. Measure fuel line pressure at idle. Is fuel line pressure correct at idle? **Fuel line pressure** **210—260 kPa** **{2.1—2.6 kgf/cm^2, 30—37 psi}**	Yes	Go to next step.
		No	**Zero or low:** Check fuel pump circuit. Check for open fuel pump relief valve. Check for fuel leak inside pressure regulator. Check for clogged main fuel line. **High:** Check pressure regulator for high pressure cause. Check for clogged fuel return line.
7	Does fuel line pressure remain at specification for 60 seconds when ignition switch is turned ON? **Fuel line pressure** **210—260 kPa** **{2.1—2.6 kgf/cm^2, 30—37 psi}**	Yes	Go to next step.
		No	Check pressure regulator for high pressure cause.
8	Is strong blue spark visible at each disconnected high-tension lead while cranking engine?	Yes	Check spark plug(s) and CMP sensor.
		No	Check following: • Hightension leads. • Ignition coil and connector.
9	Verify test results. If okay, return to diagnostic index to service any additional symptoms.		

20	FUEL ODOR (IN ENGINE COMPARTMENT)
DESCRIPTION	Gasoline fuel smell or visible leaks
POSSIBLE CAUSE	• Excessive fuel pressure • Fuel tank vent system blockage • Purge solenoid valve malfunction • Charcoal canister malfunction **Warning** **Following troubleshooting flow chart contains fuel system diagnosis and repair procedures. Read following warnings before performing fuel system service:** • **Fuel vapor is hazardous. It can easily ignite, causing serious injury and damage. Always keep sparks and flames away from fuel.** • **Fuel line spills and leaks are dangerous. Fuel can ignite and cause serious injuries or death and damage. Fuel can also irritate skin and eyes. To prevent this, always complete "BEFORE REPAIR PROCEDURE" and "AFTER REPAIR PROCEDURE" described in this manual.** **☞ 01–14 BEFORE REPAIR PROCEDURE** **☞ 01–14 AFTER REPAIR PROCEDURE**

STEP	INSPECTION		ACTION
1	Visually check for fuel leakage at fuel injector O-ring, pressure regulator and fuel line. Service as necessary. Install fuel pressure gauge between fuel filter and fuel delivery pipe. Start engine and run at idle. Does fuel line pressure remain at specification for 60 seconds when ignition switch is turned ON and OFF? **Fuel line pressure** **More than 150 kPa** **{1.5 kgf/cm^2, 21 psi}**	Yes	Go to next step.
		No	Check pressure regulator for high pressure cause.
2	Check for blockage/restriction or open between engine vacuum port and charcoal canister. Check for blockage in fuel tank vent system. Is fault indicated?	Yes	Replace vacuum hose.
		No	Go to next step.
3	Check purge solenoid valve. Is solenoid operating properly?	Yes	Go to next step.
		No	Replace purge solenoid valve.
4	Retrieve and record any continuous memory, KOEO and KOER DTCs. Are there any DTCs displayed?	Yes	Go to appropriate DTC test.
		No	Check charcoal canister for fuel saturation. If excess amount of liquid fuel present, replace charcoal canister.
5	Verify test results. If okay, return to diagnostic index to service any additional symptoms.		

21	ENGINE NOISE
DESCRIPTION	Engine noise from under hood
POSSIBLE CAUSE	Squeal, click or chirp noise • Improper engine oil level • Improper drive belt tension Rattle sound noise • Loose parts Hiss sound noise • Vacuum leaks • Loose spark plug • Air leaks from intake air system Rumble or grind noise • Improper drive belt tension Rap or roar sound noise • Exhaust system loose Other noise • Camshaft friction gear noise • MLA noise

STEP	INSPECTION		ACTION
1	Is squeal, click or chirp sound present?	Yes	Check following: • Engine oil level. • Drive belts.
		No	Go to next step.
2	Is rumble or grind sound present?	Yes	Check drive belt.
		No	Go to next step.
3	Is rattle sound present?	Yes	Check location of rattle for loose parts.
		No	Go to next step.
4	Is hiss sound present?	Yes	Check following: • Vacuum leaks. • Spark plug loose. • Intake air system leaks.
		No	Go to next step.
5	Is rap or roar sound present?	Yes	Check exhaust system for loose parts.
		No	Go to next step.
6	Is knock sound present?	Yes	Go to flow chart 12 for "KNOCKING/PINGING".
		No	If noise comes from engine internal, check for friction gear or MLA noise.
7	Verify test results. If okay, return to diagnostic index to service any additional symptoms.		

22	VIBRATION CONCERNS (ENGINE)
DESCRIPTION	Vibration from under hood or driveline
POSSIBLE CAUSE	• Loose attaching bolts or worn parts • Components malfunctioning such as worn parts

STEP	INSPECTION		ACTION
1	Check following components for loose attaching bolts or worn parts: • Cooling fan. • Drive belt and pulleys. • Engine mounts. All items okay?	Yes	Check following systems: • Wheels. • Transaxle. • Driveline. • Suspension.
		No	Readjust or retighten engine mount installation position. Service as necessary for other parts.
2	Verify test results. If okay, return to diagnostic index to service any additional symptoms.		

23	A/C DOES NOT WORK
DESCRIPTION	A/C compressor magnetic clutch does not engage when A/C is turned on
POSSIBLE CAUSE	• Improper refrigerant charging amount • Open A/C magnet clutch • Poor ground of A/C magnet clutch • A/C relay stuck to open • Power steering stuck to short • Open circuit between A/C switch and PCM through both A/C pressure switches • Short to ground circuit between power steering pressure switch and PCM • A/C low pressure switch stuck to open • Open circuit between A/C relay and A/C magnet clutch • A/C high pressure switch stuck open • A/C compressor seized

STEP	INSPECTION		ACTION
1	Retrieve and record any continuous memory, KOEO and KOER DTCs. Are there any DTCs displayed?	Yes	Go to appropriate DTC test.
		No	Go to next step.
2	Disconnect power steering pressure switch connector. Is there continuity between connector terminal and ground?	Yes	Short to ground. Repair or replace wire harness.
		No	Check for short to ground at power steering pressure switch. If switch is okay, go to next step. If short exists, replace switch.
3	Disconnect A/C compressor connector. Start the engine and turn A/C switch on. Is there correct voltage at terminal of A/C compressor magnet clutch connector? **Specification** **More than 10.5 V**	Yes	Check for ground condition of A/C compressor magnet clutch. If ground condition is okay, check for open circuit of magnet clutch.
		No	Go to next step.
4	Disconnect A/C low pressure switch and A/C high pressure switch connectors. Connect jumper wires between terminals of harness connectors. Connect NGS tester to DLC. Access ACCS PID on NGS tester. Turn ignition switch ON. Turn A/C switch on and set blower fan at any speed. Does ACCS PID read ON?	Yes	Check A/C high pressure switch and low pressure switch operation. Replace malfunctioning switch. If both switches okay, Go to next step.
		No	Check following: • A/C switch stuck open. • Open circuit among both A/C pressure switches and PCM. • Open circuit of blower motor fan switch and resister (if blower motor does not operate).
5	Remove jumper wires from switch connectors. Reconnect connectors to both switches. Start engine and turn A/C switch on. Verify fan operation. Do both fans operate?	Yes	Check for stuck to open A/C relay. Replace as necessary.
		No	Check follows and repair or replace as necessary: • Refrigerant charging amount. • Seized A/C compressor.
6	Verify test results. If okay, return to diagnostic index to service any additional symptoms.		

24	A/C ALWAYS ON/A/C COMPRESSOR RUNS CONTINUOUSLY
DESCRIPTION	A/C compressor magnetic clutch does not disengage
POSSIBLE CAUSE	• Short to ground between A/C switch and PCM • Short to ground circuit between A/C relay and PCM • A/C relay to magnet clutch circuit shorts to battery power • Stuck engagement • A/C relay stuck closed

STEP	INSPECTION		ACTION
1	Retrieve and record any continuous memory, KOEO and KOER DTCs. Are there any DTCs displayed?	Yes	Go to appropriate DTC test.
		No	Go to next step.
2	Start engine and run at idle. Turn A/C switch on. Remove A/C relay. Does A/C magnet clutch disengage?	Yes	Check following: A/C relay stuck closed. Short to ground circuit between A/C relay and PCM. If both items okay, go to next step.
		No	Check if circuit between A/C relay and magnet clutch shorts to battery power circuit. If circuit is okay, check for stuck magnet clutch.
3	Connect NGS tester to DLC. Access ACCS PID on NGS tester. Start engine and turn A/C switch on. Read ACCS PID while disconnecting high pressure switch connector. **Note** • ACCS PID should read OFF when disconnecting connector. If ACCS PID reading remains ON, short to ground circuit may be present. Does ACCS PID reading remain on?	Yes	Check for short to ground circuit between high pressure switch and PCM.
		No	Go to next step.
4	Reconnect high pressure switch connector. Read ACCS PID while disconnecting low pressure switch connector. **Note** • ACCS PID should read OFF when disconnecting connector. If ACCS PID reading remains ON, short to ground circuit may be present. Does ACCS PID reading remain on?	Yes	Check for short to ground circuit between low pressure switch and high pressure switch.
		No	Go to next step.
5	Reconnect low pressure switch connector. Read ACCS PID while turning off A/C switch. **Note** • ACCS PID should read OFF when turning the A/C switch OFF. If ACCS PID reading remains ON, short to ground circuit may be present. Does ACCS PID reading remain on?	Yes	Check for short to ground circuit between low pressure switch and A/C switch.
		No	Check for A/C switch stuck closed.
6	Verify test results. If okay, return to diagnostic index to service any additional symptoms.		

25	A/C DOES NOT CUT OFF UNDER WIDE OPEN THROTTLE CONDITIONS		
DESCRIPTION	A/C compressor magnetic clutch does not disengage under wide open throttle		
POSSIBLE CAUSE	• Throttle position (TP) sensor malfunction • Throttle position (TP) sensor misadjustment • Throttle position (TP) sensor loosely installed		
STEP	INSPECTION		ACTION
1	Does A/C turn off when A/C switch is turned off?	Yes	Go to next step.
		No	Go to flowchart 24 for "A/C ALWAYS ON/A/C COMPRESSOR RUNS CONTINUOUSLY".
2	Retrieve and record any continuous memory, KOEO and KOER DTCs. Are there any DTCs displayed?	Yes	Go to appropriate DTC test.
		No	Check TP sensor for proper adjustment. Readjust TP sensor as necessary.
3	Verify test results. If okay, return to diagnostic index to service any additional symptoms.		

26	EXHAUST SULPHUR SMELL
DESCRIPTION	Rotten egg smell (sulphur) from exhaust **Note** • Some slight sulphur smell may be normal. Catalyst with less than 8,000—16,000 km {5,000 to 10,000 miles} mileage is likely to have a sulphur smell concern due to the highly active state of new catalysts. Replacing the catalyst if no problem is found may actually make the symptom worse.
POSSIBLE CAUSE	• Electrical connectors disconnected or poor connection • Vacuum lines disconnected or improper connection • Charcoal canister malfunction • Improper fuel pressure **Warning** **Following troubleshooting flow chart contains fuel system diagnosis and repair procedures. Read following warnings before performing fuel system service:** • **Fuel vapor is hazardous. It can easily ignite, causing serious injury and damage. Always keep sparks and flames away from fuel.** • **Fuel line spills and leaks are dangerous. Fuel can ignite and cause serious injuries or death and damage. Fuel can also irritate skin and eyes. To prevent this, always complete "BEFORE REPAIR PROCEDURE" and "AFTER REPAIR PROCEDURE" described in this manual.** **☞ 01–14 BEFORE REPAIR PROCEDURE** **☞ 01–14 AFTER REPAIR PROCEDURE**

STEP	INSPECTION		ACTION
1	Are any drivability or exhaust smoke concerns present?	Yes	Go to appropriate flow chart.
		No	Go to next step.
2	Check following: • Electrical connections. • Vacuum lines. Are all items okay?	Yes	Go to next step.
		No	Service as necessary. Repeat step 2.
3	Retrieve and record any continuous memory, KOEO and KOER DTCs. Are there any DTCs displayed?	Yes	Go to appropriate DTC test.
		No	Go to next step.
4	Install fuel pressure gauge between fuel filter and fuel delivery pipe. Start engine and run it at idle. Is fuel line pressure correct at idle? **Fuel line pressure** **210—260 kPa** **{2.1—2.6 kgf/cm^2, 30—37 psi}**	Yes	Go to next step.
		No	**Zero or low:** Check fuel pump circuit. Check for open fuel pump relief valve. Check for fuel leak inside pressure regulator. Check for clogged main fuel line. **High:** Check pressure regulator for high pressure cause. Check for clogged fuel return line.
5	Does fuel line pressure remain at specification for 60 seconds when ignition switch is turned ON? **Fuel line pressure** **210—260 kPa** **{2.1—2.6 kgf/cm^2, 30—37 psi}**	Yes	Go to next step.
		No	Check pressure regulator for high pressure cause.
6	Check charcoal canister for fuel saturation. Is excess amount of liquid fuel present in canister?	Yes	Replace charcoal canister.
		No	Check fuel tank vent system. If fuel tank vent system is okay: Since sulphur content can vary in different fuels, suggest trying different brand. If fuel tank vent system is not okay: Repair or replace malfunctioning part.

27	INTERMITTENT CONCERNS		
DESCRIPTION	Symptom occurs randomly and is difficult to diagnose		
STEP	INSPECTION		ACTION
1	Talk to customer and fill out "Check Sheet." Review vehicle service history. Does vehicle have a number of previous repairs and components replaced for a certain symptom?	Yes	Go to next step.
		No	Go to diagnostic chart for symptom.
2	Key on, engine off. Connect NGS tester to DLC. Access PIDs based on information from the Symptom Charts. Lightly tap on component while viewing PID values. Wiggle and pull each component wire (Signal, ground and constant voltage, if applicable) at the component. Wiggle and pull each sensor wire (Signal, ground and constant voltage, if applicable) from the component back to PCM connector. Look for abrupt changes in PID values. Are any PID values out of range or suddenly drop out and back into range?	Yes	Possible wiring or component problem. Check each wire for corrosion, bent or loose terminals and poor wire terminal crimps. Service as necessary. Otherwise, replace component. Verify repair.
		No	Go to next step.
3	Continue to monitor information from previous step. Key on, engine running. Lightly tap on component while viewing PID values. Also wiggle and pull each component wire (Signal, ground and constant voltage, if applicable) from component back to PCM connector. Look for abrupt changes in PID values. Are any PID values out of range or suddenly drop out and back into range?	Yes	Possible wiring or component problem. Check each wire for corrosion, bent or loose terminals and poor wire terminal crimps. Service as necessary. Otherwise, replace component. Verify repair.
		No	Go to next step.
4	Continue to monitor PIDs listed in previous step. With engine still running, individually water soak the wires and connectors related to the monitor items. Look for abrupt changes in PID values or engine running conditions. Are any PID values out of range or suddenly drop out and back into range or was there noticeable engine misfire/stumble?	Yes	Fault area is identified. If fault occurred while spraying on component, replace part and verify repair. If unable to verify, reinstall original part. If fault occurred while spraying the wiring, check each circuit wire for corrosion, bent or loose terminals and poor wire terminal crimps. Service as necessary. If fault occurred while spraying the vacuum line. Service as necessary. Verify repair.
		No	Go to next step.
5	Continue to monitor information from previous step. Drive the vehicle under "Check Sheet" condition. Look for abrupt changes in PID values. Are any PID values out of range or suddenly drop out and back into range?	Yes	Possible wiring or component problem. Check each wire for corrosion, bent or loose terminals and poor wire terminal crimps. Service as necessary. Otherwise, replace component. Verify repair.
		No	Reconfirm "Check Sheet" and reselect related PIDs.

29	FUEL FILL ISSUES
DESCRIPTION	Fuel tank does not fill smoothly
POSSIBLE CAUSE	• Clogged evaporative emission pipes • Non return valve malfunction • Fuel tank pressure control valve malfunction • Improper use of fuel nozzle • Inadequate fuel filling speed **Warning** **Following troubleshooting flow chart contains fuel system diagnosis and repair procedures. Read following warnings before performing fuel system service:** **• Fuel vapor is hazardous. It can easily ignite, causing serious injury and damage. Always keep sparks and flames away from fuel.** **• Fuel line spills and leaks are dangerous. Fuel can ignite and cause serious injuries or death and damage. Fuel can also irritate skin and eyes. To prevent this, always complete "BEFORE REPAIR PROCEDURE" and "AFTER REPAIR PROCEDURE" described in this manual.** **☞ 01–14 BEFORE REPAIR PROCEDURE** **☞ 01–14 AFTER REPAIR PROCEDURE**

STEP	INSPECTION		ACTION
1	Retrieve and record any continuous memory KOEO and KOER DTCs. Are there any DTCs displayed?	Yes	**DTC displayed:** Go to appropriate DTC test.
		No	**No DTC displayed:** Go to next step.
2	Remove fuel filler pipe. Make sure non return valve is installed properly. Check non return valve operation. Is non return valve okay?	Yes	Check as followings: • Improper use of fuel nozzle • Inadequate fuel filling speed • Fuel tank pressure control valve
		No	**If non return valve installed improperly:** Reinstall non return valve to proper position. **If non return valve does not operate properly:** Replace non return valve.

30	FUEL FILLING SHUT OFF ISSUES
DESCRIPTION	Fuel does not shut off properly
POSSIBLE CAUSE	• Clogged evaporative emission pipes • Non return valve malfunction • Fuel shut off valve malfunction • Fuel nozzle malfunction • Fuel nozzle does not insert correctly

STEP	INSPECTION		ACTION
1	Retrieve and record any continuous memory, KOEO and KOER DTCs. Is there any DTC displayed?	Yes,	**DTC displayed:** Go to appropriate DTC test.
		No	**No DTC displayed:** Go to next step.
2	Remove fuel filler pipe. Make sure that non return valve installed properly. Check non return valve operation. Is non return valve okay?	Yes	Check as following: • Fuel nozzle malfunction • Fuel does not insert correctly • Fuel shut off valve
		No	**If non return valve installed improperly:** Reinstall non return valve to proper position. **If non return valve does not operate properly:** Replace non return valve.

31	CONSTANT VOLTAGE
DESCRIPTION	Incorrect constant voltage
POSSIBLE CAUSE	Constant voltage circuit malfunction

STEP	INSPECTION		ACTION
1	Was constant voltage greater than 6.0 volts when measured in previous step?	Yes	Go to step 14.
		No	Go to next step.
2	Key on, engine off. Is voltage across battery terminals greater than 10.5 volts?	Yes	Go to next step.
		No	Inspect charging system.
3	Key on, engine off. Disconnect sensor where constant voltage circuit check failed. Measure voltage between battery positive terminal and ground circuit at appropriate sensor connector. Is voltage greater than 10.5 volts and within 1.0 volt of battery voltage?	Yes	Go to next step.
		No	Go to step 9.
4	**Note** • The purpose of this step is to determine if NGS tester is communicating with PCM. Key on, engine off. Attempt to access ECT PID. Can ECT PID be accessed?	Yes	Go to step 8.
		No	Go to next step.
5	Key off. Leave TP sensor disconnected. Disconnect EGR boost sensor connector. Key on, engine off. Measure voltage between constant voltage and ground circuits at TP sensor connector. Is voltage between 4.0 and 6.0 volts?	Yes	Replace EGR boost sensor.
		No	Go to step 6.
6	Key off. Disconnect TP sensor connector. Install breakout box. Leave PCM disconnected. Key on, engine off. Measure voltage between Test Pin 71 and Test Pin 77 at breakout box. Is voltage greater than 10.5 volts?	Yes	Go to next step.
		No	Repair open VPWR circuit between PCM and main relay.
7	Key off. Leave TP sensor connector disconnected. Disconnect NGS tester from DLC. Measure resistance between Test Pin 90 and Test Pins 51/103 at breakout box. Is resistance greater than 10,000 ohms?	Yes	Replace PCM.
		No	Repair constant voltage circuit short to ground.
8	Key off. Disconnect sensor connector where constant voltage circuit check failed. Install breakout box. Leave PCM disconnected. Measure resistance between constant voltage Test Pin 90 and constant voltage circuit at appropriate sensor connector. Is resistance less than 5.0 ohms?	Yes	Replace PCM.
		No	Repair open constant voltage circuit.
9	**Note** • The purpose of this step is to determine if NGS tester is communicating with PCM. Key on, engine off. Attempt to access ECT PID. Can ECT PID be accessed?	Yes	Go to next step.
		No	Go to step 12.

STEP	INSPECTION		ACTION
10	Are KOEO DTCs present for two or more sensors connected to ground circuit? **Sensors connected to ground:** EGR boost sensor, TP sensor, IAT sensor, ECT sensor, FTP sensor, TR sensor, HO2S–11, HO2S–12, clutch switch, PSP switch, TFT sensor.	Yes	Go to next step.
		No	Repair open ground circuit to sensor where constant voltage circuit check failed.
11	Key off. Disconnect NGS tester from DLC. Disconnect sensor connector where constant voltage circuit check failed. Install breakout box. Leave PCM disconnected. Measure resistance between ground circuit at appropriate sensor connector and ground Test Pin 91 at breakout box. Is resistance less than 5.0 ohms?	Yes	Reconnect sensor connector. Go to next step.
		No	Repair open ground circuit.
12	Key off. Disconnect NGS tester from DLC. Install breakout box. Leave PCM disconnected. Measure resistance between battery negative terminal and ground Test Pins 51/76/77/103 at breakout box. Is each resistance less than 5.0 ohms?	Yes	Go to next step.
		No	Repair open ground circuit to ground.
13	Key off. Connect PCM to breakout box. Measure resistance between PCM ground test pin 91 and ground Test Pins 51/76/77/103 at breakout box. Is each resistance less than 5.0 ohms?	Yes	Ground circuits are okay.
		No	Replace PCM.
14	Key off. Disconnect sensor connector where constant voltage check failed. Disconnect TP fuel tank pressure sensor and EGR boost sensor connectors. Disconnect PCM connector. Key on, engine off. Measure voltage between constant voltage circuit at TP sensor connector and battery negative terminal. Is voltage less than 0.5 volts?	Yes	Replace PCM.
		No	Repair constant voltage circuit short to power in harness.

ENGINE DIAGNOSTIC INSPECTION [FS]

W6U101W04

Spark Plug Condition Check

Purpose

Checking spark plugs condition, can determine whether problem is related to a specific cylinder possibly all cylinders.

Procedure

1. Remove the spark plug.
2. Check spark plug condition.
3. Go to appropriate troubleshooting chart for further information.

Spark plug condition	Troubleshooting chart
Specific plug is wet or converted with carbon	1 "Wet/carbon stuck on specific plug"
Specific plug looks grayish white	2 "Grayish white with specific plug"
All plugs are wet or covered with carbon	3 "Wet/carbon stuck on all plugs"
All plugs look grayish white	4 "Grayish white with all plugs"

1 Wet/carbon stuck on specific plug

[TROUBLESHOOTING HINTS]
① Spark-No spark visible or spark weak
② Air/fuel mixture-Excessive fuel injection volume
③ Compression-No compression, low compression
Others
① Faulty spark plug

Warning
Following troubleshooting flow chart contains fuel system diagnosis and repair procedures. Read following warnings before performing fuel system service:
- **Fuel vapor is hazardous. It can easily ignite, causing serious injury and damage. Always keep sparks and flames away from fuel.**
- **Fuel line spills and leaks are dangerous. Fuel can ignite and cause serious injuries or death and damage. Fuel can also irritate skin and eyes. To prevent this, always complete "BEFORE REPAIR PROCEDURE" and "AFTER REPAIR PROCEDURE" described in this manual.**
  ☞ 01–14 BEFORE REPAIR PROCEDURE
  ☞ 01–14 AFTER REPAIR PROCEDURE

STEP	INSPECTION		ACTION
1	Is spark plug wet/covered with carbon by engine oil?	Yes	Working up and down check all areas related to oil.
		No	Go to next step.
2	Check spark plug for following. • Cracked insulator. • Heating value. • Air gap. • Worn electrode. Is spark plug okay?	Yes	Go to next step.
		No	Replace spark plug.
3	Carry out spark test at suspected faulty cylinder. Is strong blue spark visible? (Compare with normal cylinder)	Yes	Go to next step.
		No	Repair or replace.
4	Check compression pressure at suspected faulty cylinder. Is compression pressure correct? ☞ 01–10A COMPRESSION INSPECTION [FS]	Yes	Go to next step.
		No	Repair or replace.
5	Check fuel injector resistance at suspected faulty cylinder. Is resistance correct? **Specification** **12—16 kΩ [20 °C {68 °F}]**	Yes	Go to next step.
		No	Replace fuel injector.

STEP	INSPECTION		ACTION
6	Check fuel injection control signal at suspected faulty cylinder. Is terminal voltage correct? (Compare with normal cylinder) **Specification** **B+**	Yes	Check fuel injector for following. • Leakage. • Injection volume.
		No	Repair or replace.

2	Grayish white with specific plug

[TROUBLESHOOTING HINTS]
① Air/fuel mixture-Insufficient fuel injection volume
Others
① Faulty spark plug

Warning
Following troubleshooting flow chart contains fuel system diagnosis and repair procedures. Read following warnings before performing fuel system service:
- **Fuel vapor is hazardous. It can easily ignite, causing serious injury and damage. Always keep sparks and flames away from fuel.**
- **Fuel line spills and leaks are dangerous. Fuel can ignite and cause serious injuries or death and damage. Fuel can also irritate skin and eyes. To prevent this, always complete "BEFORE REPAIR PROCEDURE" and "AFTER REPAIR PROCEDURE" described in this manual.**
  ☞ 01–14 BEFORE REPAIR PROCEDURE
  ☞ 01–14 AFTER REPAIR PROCEDURE

STEP	INSPECTION		ACTION
1	Check spark plug for following. • Heating value. • Air gap. Are they okay?	Yes	Go to next step.
		No	Replace spark plug.
2	Check operation of fuel injector at suspected faulty cylinder. Is operation sound heard?	Yes	Go to next step.
		No	Repair or replace.
3	Check fuel injector resistance at suspected faulty cylinder. Is resistance correct? **Specification** **12—16 kΩ [20 °C {68 °F}]**	Yes	Go to next step.
		No	Replace fuel injector.
4	Check fuel injector control signal at suspected faulty cylinder. Is terminal voltage correct? (Compare with normal cylinder) **Specification** **B+**	Yes	Check fuel injection volume at suspected faulty cylinder.
		No	Repair or replace.

3	Wet/carbon stuck on all plugs

[TROUBLESHOOTING HINTS]
① Spark-Spark weak
② Air/fuel mixture-Too rich
③ Compression-Low compression
Others
① Clogs in intake/exhaust system

Warning
Following troubleshooting flow chart contains fuel system diagnosis and repair procedures. Read following warnings before performing fuel system service:
- **Fuel vapor is hazardous. It can easily ignite, causing serious injury and damage. Always keep sparks and flames away from fuel.**
- **Fuel line spills and leaks are dangerous. Fuel can ignite and cause serious injuries or death and damage. Fuel can also irritate skin and eyes. To prevent this, always complete "BEFORE REPAIR PROCEDURE" and "AFTER REPAIR PROCEDURE" described in this manual.**
  ☞ 01–14 BEFORE REPAIR PROCEDURE
  ☞ 01–14 AFTER REPAIR PROCEDURE

STEP	INSPECTION		ACTION
1	Is air cleaner element free of restrictions?	Yes	Go to next step.
		No	Replace air cleaner element.
2	Carry out spark test. Is a strong blue spark visible at each cylinder?	Yes	Go to next step.
		No	Repair or replace.
3	Carry out fuel pressure inspection. Is fuel pressure correct? **Fuel line pressure** **260—310 kPa {2.6—3.2 kgf/cm², 37—46 psi} at ignition switch ON**	Yes	Go to next step.
		No	Repair or replace.
4	Check following PID. • MAF PID. ☞ 01–40A MASS AIR FLOW SENSOR INSPECTION [FS] • ECT PID. ☞ 01–40A ENGINE COOLANT TEMPERATURE SENSOR INSPECTION [FS] • HO2S11, HO2S12, HO2S21, HO2S22 ☞ 01–40A HEATED OXYGEN SENSOR INSPECTION [FS] (When engine can be started). Are terminals okay?	Yes	Go to next step.
		No	Repair or replace.
5	Carry out purge control inspection (When engine can be started). Is purge control correct?	Yes	Go to next step.
		No	Repair or replace.
6	Carry out compression inspection. Is compression correct?	Yes	Check clogs in exhaust system.
		No	Repair or replace.

4	Grayish white with all plugs

[TROUBLESHOOTING HINTS]
① Air/fuel mixture-Too lean

Warning
Following troubleshooting flow chart contains fuel system diagnosis and repair procedures. Read following warnings before performing fuel system service:
- **Fuel vapor is hazardous. It can easily ignite, causing serious injury and damage. Always keep sparks and flames away from fuel.**
- **Fuel line spills and leaks are dangerous. Fuel can ignite and cause serious injuries or death and damage. Fuel can also irritate skin and eyes. To prevent this, always complete "BEFORE REPAIR PROCEDURE" and "AFTER REPAIR PROCEDURE" described in this manual.**
  ☞ 01–14 BEFORE REPAIR PROCEDURE
  ☞ 01–14 AFTER REPAIR PROCEDURE

STEP	INSPECTION		ACTION
1	When engine cannot be started, check intake-air system for air leakage. When engine can be started, carry out intake manifold vacuum inspection. Is air sucked in from intake-air system?	Yes	Repair or replace.
		No	Go to next step.
2	Carry out fuel pressure inspection. Is fuel pressure correct? **Fuel line pressure** **260—310 kPa {2.6—3.2 kgf/cm², 37—46 psi} at ignition switch ON**	Yes	Check following PID. • MAF PID. ☞ 01–40A MASS AIR FLOW SENSOR INSPECTION [FS] • ECT PID. ☞ 01–40A ENGINE COOLANT TEMPERATURE SENSOR INSPECTION [FS] • O2S11, O2S12 PID. ☞ 01–40A HEATED OXYGEN SENSOR INSPECTION [FS] (When engine can be started). • Check for PCM ground condition.
		No	Repair or replace.

ENGINE SYSTEM INSPECTION [FS]

Intake Manifold Vacuum Inspection

1. Verify air intake hoses are installed properly.
2. Start the engine and run at idle.
3. Measure the intake manifold vacuum by using a vacuum gauge.

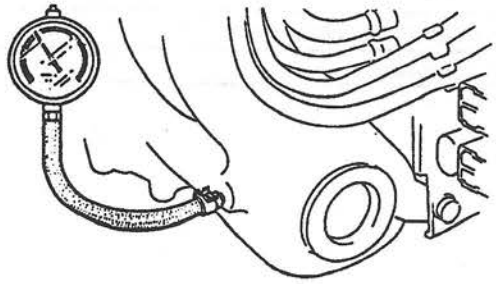

W6U101WAV

Specification
Less than –60 kPa {–450 mmHg, –18 inHg}

W6U101W05

4. If not as specified, check following.
   - Air suction at:
     Throttle body installation point.
     Intake manifold installation point.
     PCV valve installation point.
   - Fuel injector insulator.
   - Accelerator cable free play.
   - Engine compression (Refer to 01–10A COMPRESSION INSPECTION [FS].

Fuel Injector Operation Inspection

1. Warm up the engine and run at idle (or cranking if it does not start.)
2. Listen for the operational sound of each injector with a soundscope.

Note
- Compare the sound of each injector because of the difficulty of verifying the sound of individual injectors.

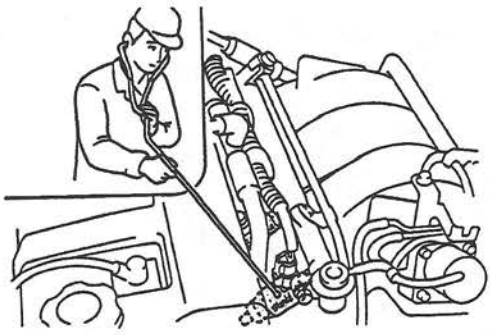
W6U101WAW

Idle Air Control Valve Inspection

1. Start the engine and run at idle.
2. Disconnect the IAC valve connector and verify if the engine speed drops or engine stalls.
3. If engine speed does not drop or does not stall, check following.
   - IAC valve. (Refer to 01–13A IDLE AIR CONTROL VALVE INSPECTION [FS].)
   - IAC valve air passage.
   - Open or short circuit between IAC valve and PCM.
4. Warm up the engine to normal operating temperature and run it at idle.
5. Turn the electrical loads ON and verify the engine speed is within the specification.

Load condition	Idle speed	
	MTX	ATX
No load	550—850	500—800
A/C ON	625—925	500—800
P/S ON*1	550—850	500—800
E/L ON*2	625—925	525—825

*1 : Steering wheel fully turned.

*2 : When two or more of the following electrical loads are met, but only one of the condition's idle speed is the same as a no-load condition.

- Headlight
- Cooling fan
- Blower motor
- A/C switch and fan switch ON

Note

- Excludes temporary idle speed drop immediately after the electrical loads are turned ON.

6. If not as specified, check the related switches and wiring harnesses.

Fuel Pressure Hold Inspection

Warning

- **Fuel line spills and leaks are dangerous. Fuel can ignite and cause serious injuries or death and damage. Fuel can also irritate skin and eyes. To prevent this, always complete the "BEFORE REPAIR PROCEDURE" and "AFTER REPAIR PROCEDURE". (Refer to 01–14 BEFORE REPAIR PROCEDURE, 01–14 AFTER REPAIR PROCEDURE.)**

1. Disconnect the negative battery cable.
2. Install a fuel pressure gauge between the fuel filter and the main fuel hose. (Install clamps as shown.)

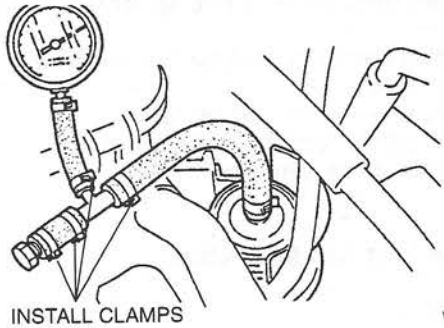

W6U101WAX

3. Disconnect the negative battery cable.
4. Remove the fuel pump relay

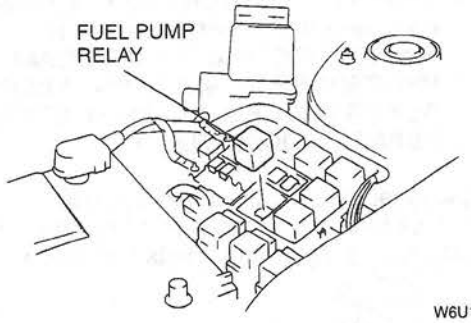

W6U101WCL

Caution

- **Connecting the wrong fuel pump relay socket terminals may possibly cause a malfunction. Carefully connect the specified terminals only.**

5. Connect fuel pump relay socket terminal 30 and 87 by using a jumper wire.

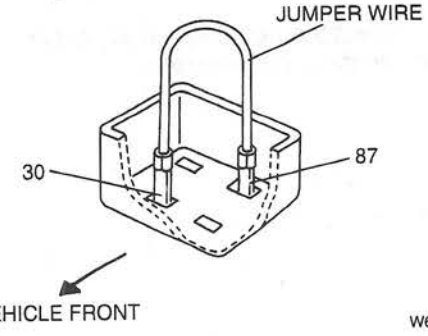

W6U101WCK

Caution
- **Before connecting the negative battery cable be sure all fuel connections, clamps and fittings are secure. Fuel pump will operate at full pressure anytime the cable is connected to the battery. When the cable makes contact, it is sure to arc and create a danger of ignition or explosion.**

6. Connect the negative battery cable for **10 seconds** to operate the fuel pump.
7. Disconnect the negative battery cable and remove the jumper wire.
8. Observe the fuel pressure after 5 minutes.

Fuel pressure
More than 147 kPa {1.5 kgf/cm^2, 21 psi}

9. If not as specified, perform the following inspections.
   - Fuel pump hold pressure.
   - Pressure regulator hold pressure.
   - Injector fuel leakage.

Fuel Line Pressure Inspection

Warning
- **Fuel line spills and leaks are dangerous. Fuel can ignite and cause serious injuries or death and damage. Fuel can also irritate skin and eyes. To prevent this, always complete the "BEFORE REPAIR PROCEDURE" and "AFTER REPAIR PROCEDURE". (Refer to 01–14 BEFORE REPAIR PROCEDURE, 01–14 AFTER REPAIR PROCEDURE.)**

1. Disconnect the negative battery cable.
2. Install a fuel pressure gauge between the fuel filter and the main fuel hose. (Install clamps as shown.)

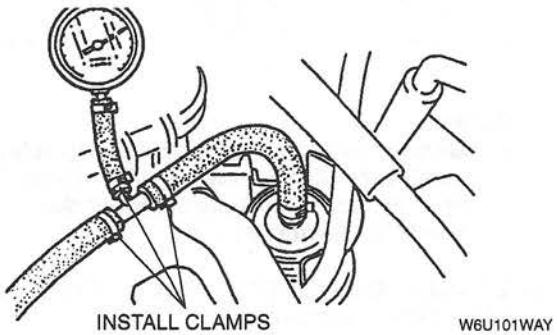

3. Disconnect the negative battery cable.
4. Remove the fuel pump relay.

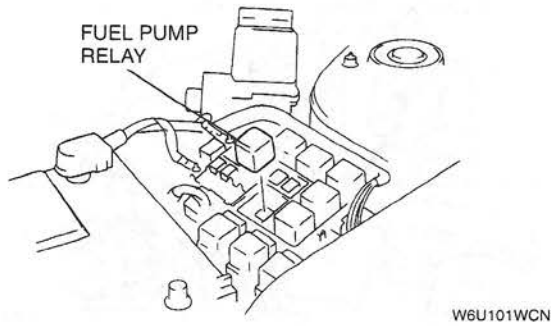

Caution
- **Connect the wrong fuel pump relay socket terminals may possible cause a malfunction. Carefully connect the specified terminals only.**

5. Connect fuel pump relay socket terminal 30 and 87 by using a jumper wire.

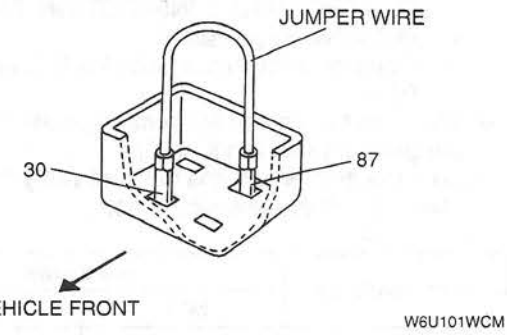

Caution
- **Before connecting the negative battery cable be sure all fuel connections, clamps and fittings. Fuel pump will operate at full pressure anytime the cable is connected to the battery. When the cable makes contact, it is sure to arc and create a danger of ignition or explosion.**

6. Connect the negative battery cable to operate the fuel pump.
7. Measure the fuel line pressure.

Fuel line pressure
260—310 kPa
{2.6—3.2 kgf/cm^2, 37—46 psi}

8. If not as specified, perform the following inspections.
   - Fuel pump maximum pressure.
   - Fuel line clogging and restriction.
   - Fuel filter clogging and restriction.
   - Pressure regulator hold pressure.

Pressure Regulator Control Inspection

Warning

- **Fuel line spills and leaks are dangerous. Fuel can ignite and cause serious injuries or death and damage. Fuel can also irritate skin and eyes. To prevent this, always complete the "BEFORE REPAIR PROCEDURE" and "AFTER REPAIR PROCEDURE". (Refer to 01–14 BEFORE REPAIR PROCEDURE, 01–14 AFTER REPAIR PROCEDURE.)**

1. Install the fuel pressure gauge.

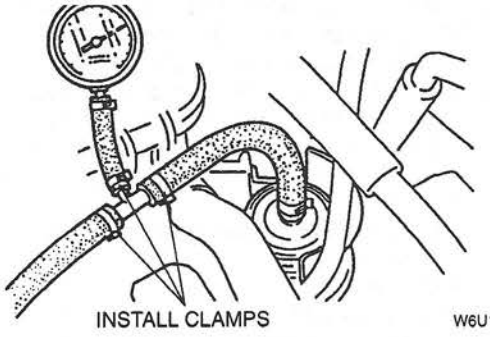

2. Measure the fuel pressure under the following conditions:

Specifications

	Fuel pressure (kPa {kgf/cm², psi})		
Idling	210—260 {2.1—2.6, 30—37}	210—260 {2.1—2.6, 30—37}	260—310 {2.6—3.2, 37—46}
During 120 sec. of hot start	260—310 {2.6—3.2, 37—46}		
After 120 sec. of hot start	210—260 {2.1—2.6, 37—46}	210—260 {2.1—2.6, 30—37}	260—310 {2.6—3.2, 37—46}
Pressure regulator control condition	Normal	Not normal (Perform Inspection 1)	Not normal (Perform Inspection 2)

3. If the fuel pressure is not within the specification, carry out either Inspection 1 or Inspection 2 as required.

Inspection 1

1. Connect the **SSTs** (NGS tester) to the DLC.

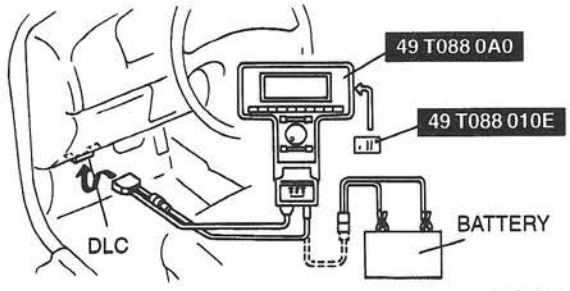

2. Access the following PIDs.
   - ECT PID. (Refer to 01–40A ENGINE COOLANT TEMPERATURE SENSOR INSPECTION [FS].)
   - IAT PID. (Refer to 01–40A INTAKE AIR TEMPERATURE SENSOR INSPECTION [FS].)
   - TP V PID. (Refer to 01–40A THROTTLE POSITION SENSOR INSPECTION [FS].)
3. Check PID value.
4. If okay, check:
   - Pressure regulator.
   - PRC solenoid valve.
   - Wiring between PRC solenoid valve and PCM terminal 19 (open circuit).
   - Wiring between main relay and PRC solenoid valve (open circuit).

Inspection 2

1. Connect the **SSTs** (NGS tester) to the DLC.

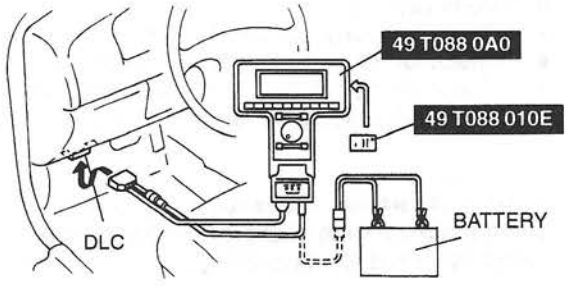

2. Access the following PIDs.
   - ECT PID. (Refer to 01–40A ENGINE COOLANT TEMPERATURE SENSOR INSPECTION [FS].)
   - IAT PID. (Refer to 01–40A INTAKE AIR TEMPERATURE SENSOR INSPECTION [FS].)
3. Check PID value.
4. If okay, check:
   - Loose or damaged vacuum hose between the pressure regulator, PRC solenoid valve, and intake manifold.
   - PRC solenoid valve.
   - Wiring between PRC solenoid valve and PCM terminal 19 (short circuit).

Purge Control Inspection

1. Start and warm up the engine to the normal operating temperature.
2. Let the engine idle.
3. Disconnect the vacuum hose between the purge solenoid valve and the charcoal canister.
4. Put a finger to the purge solenoid valve and verify there is no vacuum applied.

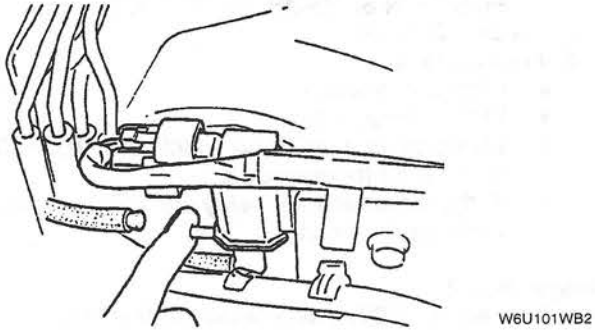

W6U101WB2

5. If there is vacuum:
   - Check the purge solenoid valve.
   - Check for loose or damaged vacuum hose.
   - Check wiring between purge solenoid valve and PCM terminal 67 (short circuit).

Main Relay Operation Inspection

1. Verify the main relay clicks when the ignition switch is turned to ON and OFF.

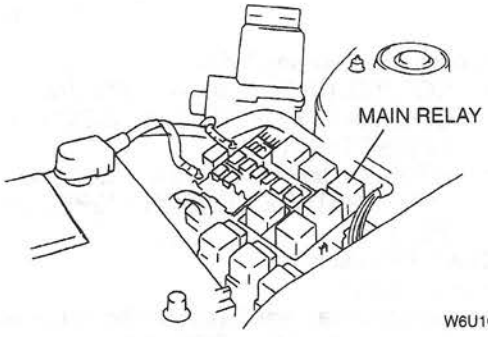

W6U101WB3

2. If there is no sound, inspect the following:
   - Main relay.
   - Harness and connector between ignition switch and main relay.

Ignition Timing Control Inspection

1. Connect a timing light to the engine.
2. Crank the engine.
3. Verify the timing mark (yellow) on the crankshaft pulley and the mark on the timing belt cover are aligned.

   Specification
   BTDC 6—18° (12 ± 6°)

4. Increase engine speed and verify ignition timing is advanced.

A/C Cut Off Control Inspection

1. Start the engine and let it idle.
2. Turn the A/C switch and the fan switch ON.
3. Check if the operation sound of the A/C compressor electromagnetic clutch is heard. (A/C compressor starts to work.)
4. Fully open the throttle valve. Check if the A/C compressor magnetic clutch operation sound is heard. (A/C compressor stops to work.) Then, 3—6 seconds after, check if the operational sound of the A/C compressor electromagnetic clutch is heard.
5. Turn the A/C switch and the fan switch OFF.
6. If the sound is not heard:
   (1) Connect a jumper wire between both terminals of A/C pressure switch connector.
   (2) Turn the ignition switch ON.
   (3) Turn the A/C switch and the fan switch ON. Verify sound is heard from A/C relay.
   (4) If the operation sound is heard, check the TP V PID.
   - TP V PID.

   (5) If the operation sound is not heard, check the following:
   - A/C relay.
   - Open or short to ground circuit in wiring harnesses and connectors (Main relay — A/C relay — PCM terminal 69)
   - A/C related parts.

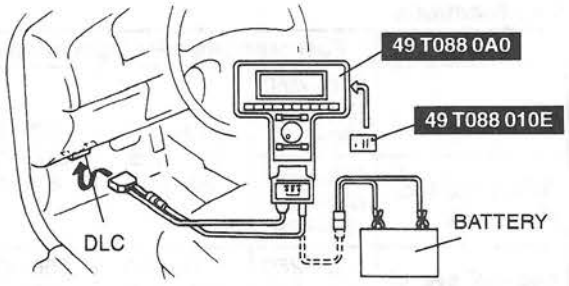

W6U101WB7

Spark Test

1. Disconnect the fuel pump relay connector.
2. Verify each high-tension lead and connector is connected properly.
3. Inspect the ignition system in the following procedure.

Warning

- **High voltage in the ignition system can cause strong electrical shock which can result in serious injury. Avoid direct contact to the vehicle body during the following spark test.**

STEP	INSPECTION		ACTION
1	Remove hightension lead from spark plug. Hold high-tension lead with installed pliers 5—10 mm {0.20—0.39 in} from ground. Turn ignition switch to START and verify that there is a strong blue spark. (Check each cylinder)	Yes	Ignition system okay.
		No	If some cylinders do not spark, go to step 2. If all cylinders do not spark, go to step 3.
2	Is hightension lead resistance correct? **Specification** **16 kΩ/m**	Yes	Check for crack or damage of hightension lead and ignition coil.
		No	Replace hightension lead.
3	Does PCM or ignition coil connector have poor connection?	Yes	Repair or replace connector.
		No	Go to next step.
4	Is ignition coil winding resistance okay?	Yes	Go to next step.
		No	Replace ignition coil.
5	Are following parts okay? • CKP sensor and crankshaft pulley (also, check for a gap). **Specification** **0.5—1.5 mm {0.020—0.059 in}** • PCM terminal 21/22 voltage **Specification** **Approx. 1.5 V**	Yes	Check for open or short in wiring harness and connectors of CKP sensor.
		No	Repair or replace.

Fuel Cut Control Inspection

1. Warm up the engine to normal operating temperature and let it idle.
2. Increase the engine speed to 3,000 rpm, then suddenly release the throttle.
3. Check if there is no operational sound from each injector with a screwdriver or a sound scope when the engine speed is above approx. 2,500 rpm on deceleration.

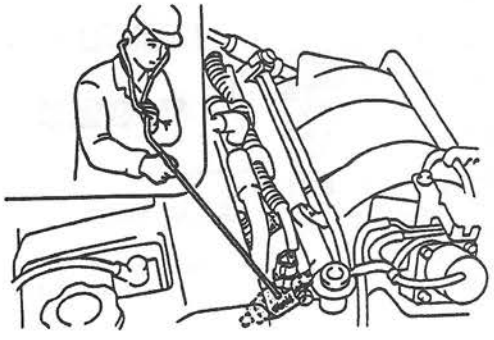

W6U101WB4

Cooling Fan Control System Inspection

Cooling fan operation

Engine condition	Cooling fan relay	Condenser fan relay
Engine coolant temperature below 97 °C {207 °F}	OFF	OFF
Engine coolant temperature above 97 °C {207 °F}	ON	OFF
Engine coolant temperature above 109 °C {228 °F}	ON	ON
Air conditioning switch ON	ON	ON
Engine coolant temperature sensor malfunction	ON	ON

Cooling fan

1. Verify the engine is cold.
2. Turn the ignition switch ON.
3. Verify the cooling fan is not operating.
4. If the cooling fan is operating:
   (1) Connect the **SSTs** (NGS tester) to the DLC.

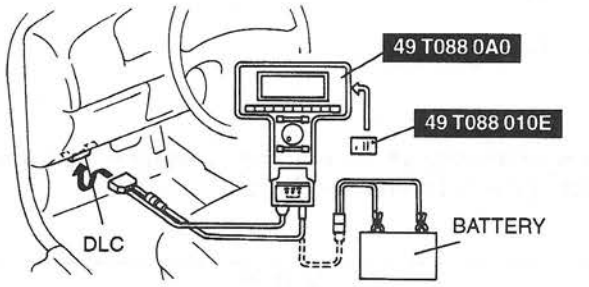

W6U101WB5

(2) Select the "ACTIVE COMMAND" then "OUTPUT TEST MODE" function on the NGS tester display.
(3) Select the "ALL OFF" and verify the cooling fan signal is OFF.
(4) If the cooling fan control signal is ON check:
- Cooling fan relay stuck in closed position.
- Short to ground circuit between cooling fan relay and PCM.
- Short to power in circuit between cooling fan relay.
- DTCs for ECT sensor.
- P0117, P0118, P0125, P1116, P1117.

(5) If the cooling fan is OFF, check the following.
- Short to ground circuit between A/C switch and PCM.
- DTC for ECT sensor.
- P0117, P0118, P0125, P1116, P1117.

5. Start the engine.
6. Verify that the cooling fan is operating when engine is hot.
7. If the cooling fan does not operate, do as follows.
(1) Connect the **SSTs** (NGS tester) to the DLC.

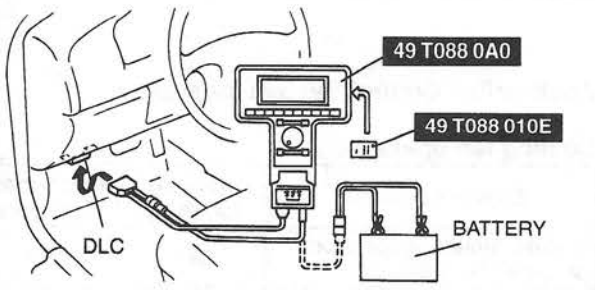

W6U101WD7

(2) Select "Active Command" mode.
(3) Select "Output Test Mode".
(4) Select "ALL ON" mode.
(5) Press "Start".
(6) If the cooling fan operates, check the ECT sensor DTCs.
- P0117, P0118, P0125, P1116, P1117.

(7) If the cooling fan does not operate, do as follows.
① Select "ALL ON". Operate cooling fan by selecting "Start", and verify that operational sound is heard from the cooling fan relay.
② If the operational sound is heard, check the wiring harnesses and connectors and cooling fan motor.
③ If operational sound is heard, check cooling fan relay and open circuit in wiring harnesses and connectors.

8. Turn the A/C switch and fan switch ON.
9. Verify the cooling fan is operating.
10. If fan does not operate, check A/C system.

Condenser fan relay
1. Verify that A/C switch and fan switch are OFF.
2. Start the engine and let it idle.
3. Verify that the condenser fan is not operating.
4. If condenser fan is operating, check:
- Condenser fan realy for stuck in closed position.
- Short to power in circuit between condenser fan relay and condenser fan.
- Short to ground in circuit between A/C pressure switches and PCM.
- Short to ground circuit between condenser fan relay and PCM terminal 17 (short circuit).

5. Turn the A/C switch and fan switch ON.
6. Verify that the condenser fan is operating and operating sound of A/C compressor magnetic clutch is heard.
7. Turn the A/C switch and fan switch OFF.
8. If the condenser fan does not operate but operating sound of A/C compressor magnetic clutch is heard, check as follows:
- Open circuit between ignition switch and condenser fan relay.
- Open circuit between battery and condenser fan relay.
- Open circuit between condenser fan relay and PCM.
- Open circuit between condenser fan relay and condenser fan motor or fan motor ground.
- Condenser fan relay stuck to open.
- Condenser fan motor.

9. If both condenser fan and A/C compressor do not operate, check:
- TP V PID.
(Refer to 01–40A THROTTLE POSITION SENSOR INSPECTION [FS].)
- A/C system.

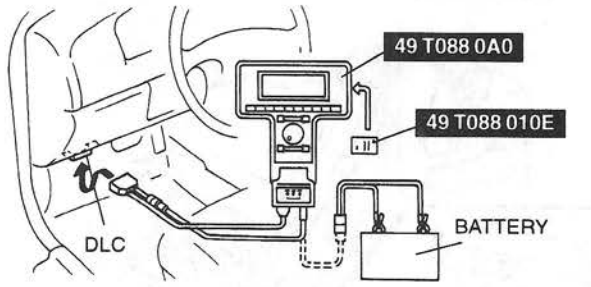

W6U101WB6

01–01B TROUBLESHOOTING [ENGINE CONTROL KL]

FOREWORD 01–01B–1
ENGINE ON-BOARD DIAGNOSIS [KL] 01–01B–1
On-Board Diagnostic (OBD) Test Description 01–01B–1
System Pass 01–01B–1
Key On Engine Off (KOEO) Self-Test 01–01B–2
Key On Engine Running (KOER) Self-Test 01–01B–2
Read/Clear Continuous Memory DTC Access Self-Test 01–01B–2
Parameter Identification (PID) Access 01–01B–2
Brake On/Off Test 01–01B–2
Transaxle Control (O/D OFF) Switch Test 01–01B–2
Power Steering Pressure (PSP) Switch Test 01–01B–2
On-Board Diagnostic Test 01–01B–2
After Repair Procedure 01–01B–5
PID/DATA Monitor and Record Procedure 01–01B–5
Playback of Stored PIDs Procedure . 01–01B–5
Output Test Mode Procedure 01–01B–5
Oxygen Sensor Monitoring Test Results Access Procedure 01–01B–6
OBD II Drive Mode 01–01B–6
ENGINE SYMPTOM TROUBLESHOOTING [KL] 01–01B–128
Diagnostic Index 01–01B–128
Quick Diagnostic Chart 01–01B–130
Description of Drivability Problems .. 01–01B–132
Fuel Pressure Release and Servicing Fuel System 01–01B–132
Fuel Line Safety Procedures 01–01B–132
Symptom Troubleshooting 01–01B–133
ENGINE DIAGNOSTIC INSPECTION [KL] 01–01B–173
Spark Plug Condition Check 01–01B–173
ENGINE SYSTEM INSPECTION [KL] . 01–01B–176
Intake Manifold Vacuum Inspection .. 01–01B–176
Fuel Injector Operation Inspection ... 01–01B–176
Idle Air Control Valve Inspection 01–01B–177
Fuel Pressure Hold Inspection 01–01B–177
Fuel Line Pressure Inspection 01–01B–178
Pressure Regulator Control Inspection 01–01B–179
Purge Control Inspection 01–01B–180
Main Relay Operation Inspection 01–01B–180
Ignition Timing Control Inspection ... 01–01B–180
A/C Cut Off Control Inspection 01–01B–180
Spark Test 01–01B–181
Fuel Cut Control Inspection 01–01B–181
Cooling Fan Control System Inspection 01–01B–181

FOREWORD

W6U101W09

Before proceeding with the following troubleshooting.

- Refer to section 00–00 to understand basic troubleshooting procedures.
- Perform the diagnostic trouble code (DTC) inspection.
- If a DTC is displayed, proceed with the appripriate inspection steps.
- After starting the engine, perform "ENGINE TUNE-UP".

ENGINE ON-BOARD DIAGNOSIS [KL]

W6U101W0A

On-Board Diagnostic (OBD) Test Description

OBD Test is divided into three special tests: Key On Engine Off Self-Test, Key On Engine Running Self-Test and Continuous Memory DTCs Self-Test. The OBD test checks the integrity and function of the powertrain control system and outputs the test results when requested by the NGS Tester. If also provides a quick end check of the powertrain control system, is usually performed at the start of each diagnostic procedure with all accessories off and is performed at end of most troubleshooting tests for verification of repair and make sure no other faults were incurred while servicing a previous fault.

System Pass

A system pass will be displayed when no DTCs are output and no NGS Tester communication error exists. System pass means that hardware monitored by the PCM is functioning within normal operating limits. When using the NGS Tester, all step by step instructions are defined in the NGS instruction manual. When using a generic scan tool, KOEO and KOER self-tests may not be supported. Refer to the manufacturer's manual for details.

Key On Engine Off (KOEO) Self-Test
Key On Engine Off (KOER) is a functional test of the PCM performed on demand. A fault must be present at the time of testing for the Self-Test to detect the fault. This test will perform checks on certain sensor and actuator circuits. A Diagnostic Trouble Code (DTC) will be output on the data link at the end of the test when requested by the NGS Tester. Only system pass, hard fault code or an incomplete OBD II drive mode will be displayed.

Key On Engine Running (KOER) Self-Test
Key On Engine Running (KOER) is a functional test of the PCM performed on demand with the engine running and vehicle stopped. A check of the inputs and outputs is made during operating conditions and at normal temperature. The brake on/off, transaxle control and power steering pressure switch tests are part of the KOER self-test and **MUST** be performed during this operation (see below). A fault must be present at the time of testing to detect the fault. A Diagnostic Trouble Code (DTC) will be output on the data link at the end of the test when requested by the NGS Tester. Only system pass, hard fault code or an incomplete OBD II drive mode will be displayed.

Read/Clear Continuous Memory DTC Access Self-Test
Continuous DTC access is also a functional test of the powertrain control system. The continuous self-test is always active. The test consists of all the OBD II monitors and the comprehensive component monitor, and is designed to detect failures contributing to driveability and emission concerns. As part of the an OBD Test, the technician may perform a specific drive cycle before running the OBD Test. This is necessary to detect certain faults not tested during other self-test operations. All self-tests are menu driven in the NGS Tester.

Parameter Identification (PID) Access
The PID mode allows access to certain data values, analog and digital inputs and outputs, calculated values and system status information.

Brake On/Off Test
This tests ability of the powertrain control system to detect a state of change in the stop light switch. The brake pedal **MUST** briefly be applied and released on all vehicles with brake on/off input. This test is done during the KOER self-test.

Transaxle Control (O/D OFF) Switch Test
This tests ability of the powertrain control system to detect a state of change in the O/D OFF switch. The switch **MUST** briefly be cycle on all vehicles with a O/D OFF switch. This test is done during the KOER self-test.

Power Steering Pressure (PSP) Switch Test
This tests the ability of the powertrain control system to detect a change in power steering fluid pressure. The steering wheel **MUST** briefly be turned at least 1/4 of a revolution. This test is done during the KOER self-test.

On-Board Diagnostic Test
New generation star (NGS) tester hook-up procedure

Note
- Make sure key is off.

1. Insert the vehicle interface module and program card into the **SST** (NGS tester) control unit.

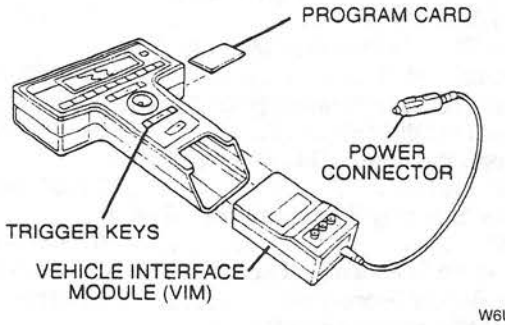

W6U101WKG

2. Plug the NGS OBD II adapter into the interface module and the large 5 pin connector into the vehicle data link connector (DLC) located under the left side of the center console.

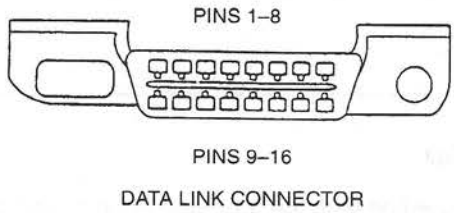

W6U101WH0

3. Plug the **SST** (NGS tester) tester power cable into the NGS OBD II adapter power cable connector, cigarette lighter or use a battery hook-up adapter.

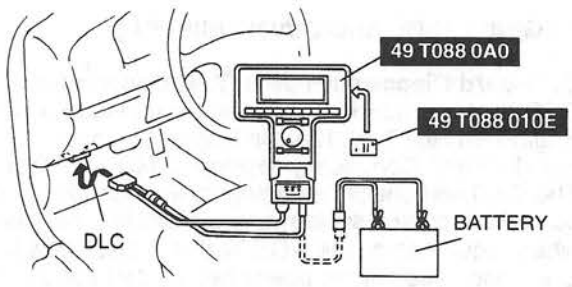

W6U101WH1

4. Listen for a double beep. The **SST** is now initialized. Begin the functional test of powertrain control system.

Reading DTCs procedure

Note
- Start engine and bring up to operating temperature before running OBD Test.

1. Perform the necessary vehicle preparation and visual inspection. Hook-up the **SST** (NGS tester) to the vehicle.

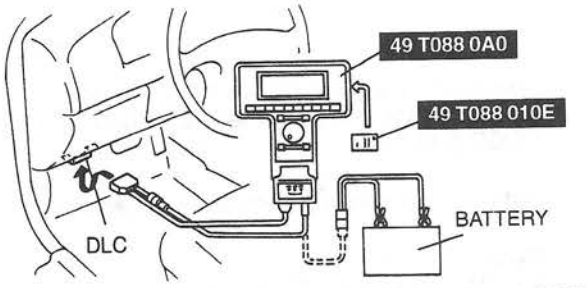

W6U101WK0

2. Move the cursor to **VEHICLE AND ENGINE SELECTION**.

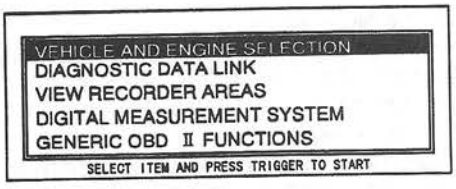

W6U101WK1

3. Move the cursor to **SELECT NEW VEHICLE YEAR & MODEL**. Press the trigger key to enter this selection.

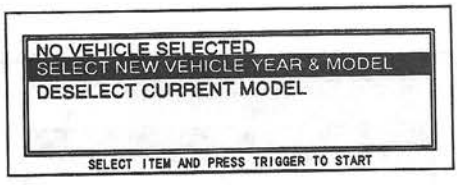

W6U101WK2

4. Move the cursor to **1998 — VIN #10:W**. Press the trigger key enter this selection.
5. Move the cursor to appropriate model. Press the trigger key enter this selection.
6. The vehicle selection screen showing the selected vehicle will be displayed. Move the cursor to the vehicle selected. Press the trigger key.

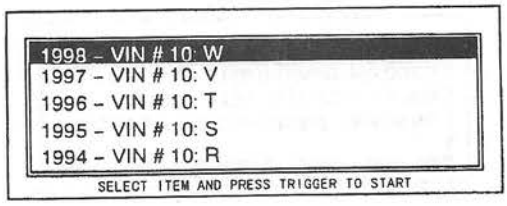

W6U101WK3

7. Move the cursor to **DIAGNOSTIC DATA LINK** in the main menu screen. Press the trigger key to enter into menu system diagnostics.

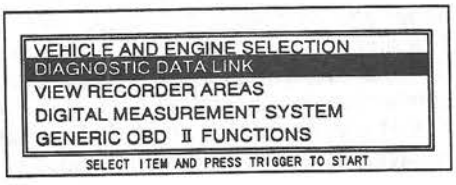

W6U101WK4

8. Move the cursor to **PCM**. Press the trigger.

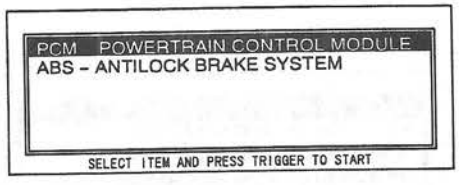

W6U101WK5

9. Move the cursor to **DIAGNOSTIC TEST MODE**. Press the trigger key to enter this selection.

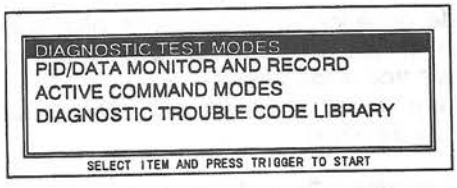

W6U101WK6

10. Move the cursor to appropriate mode. Press the trigger key to enter this selection.
11. Retrieve DTCs as follows:
    (1) Continuous DTCs
    (2) KOEO DTCs
    (3) KOER DTCs

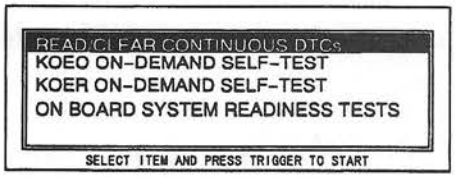

W6U101WK7

Read/clear continuous DTC self-test procedure

Note

- The first test to run is Read/Clear Continuous DTC Self-Test. Record the DTCs on a piece of paper and proceed to the KOEO Self-Test.
- The purpose of recording the continuous DTCs at this time to make sure they are not unintentionally cleared during any KOEO or KOER service. KOEO and KOER codes are always addressed before continuous codes.

1. Perform the "New generation star (NGS) tester hook-up procedure".
2. Perform the "Reading DTCs procedure".
3. Move the cursor to **READ/CLEAR CONTINUOUS DTCs**. Press the trigger key to enter this selection.

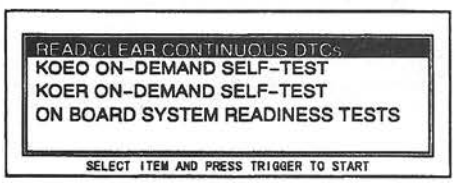

W6U101WK8

4. Turn key on. Press **START**.
5. Follow operating instruction from the menu.
6. If there are DTC(s), refer to Diagnostic Trouble Code Table for further diagnosis information. After repairs, clear DTCs. Press "**C-ALL**" (Key #7) button and press trigger.
7. If there are no codes, press **CANCEL**. Perform KOEO Self-Test.

Key ON engine OFF self-test procedure

1. Perform the "New generation star (NGS) tester hook-up procedure".
2. Perform the "Reading DTCs procedure".
3. Move the cursor to **KOEO ON-DEMAND SELF-TEST**. Press the trigger key to enter this selection.

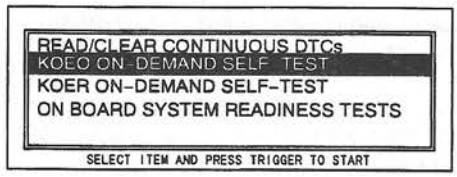

W6U101WK9

4. Follow operating instruction from the menu.
5. Note any KOEO DTCs. Press **CANCEL**. Perform KOER Self-Test.

Key ON engine running self-test procedure

Note

- Make sure the A/C switch is OFF during KOER Self-Test. If the A/C switch is ON during this test, DTC P1464 will be indicated on the NGS tester.
- The brake pedal must be depressed and released after KOER Self-Test is initiated. If not performed, DTC P1703 will be indicated on the NGS tester.
- The steering wheel must be turned to the right and left after KOER Self-Test is initiated. If not performed, DTC P1650 will be indicated on the NGS tester.
- Start the engine and bring up to normal operating temperature before running the KOER Self-Test.

1. Perform the "New generation star (NGS) tester hook-up procedure".
2. Perform the "Reading DTCs procedure".
3. Move the cursor to **KOER ON-DEMAND SELF-TEST**. Press the trigger to enter this selection.

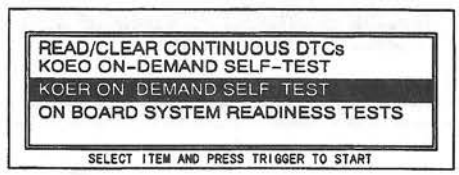

W6U101WKA

4. Start engine and bring up to normal operating temperature. Press **START**.
5. Follow operating instruction from the menu and perform Brake On/Off (BOO), O/D OFF switch and PSP cycling test, if equipped.
6. Note any KOER DTCs.
7. Press **CANCEL** several times to return to the main menu.

After Repair Procedure

1. After repairs have been made, connect **SST** (NGS tester) to the Data Link Connector.
2. Select Clear Codes function in **GENERIC OBD II FUNCTIONS** and clear DTCs.

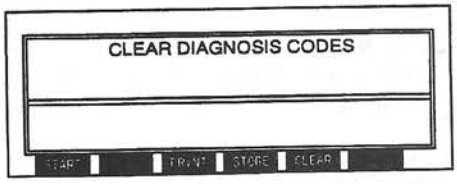

W6U101WKH

3. Perform Self-Test to ensure customer's concern has been resolved.

PID/DATA Monitor and Record Procedure

1. Perform the "New generation star (NGS) tester hook-up procedure."
2. Perform step 1 through step 9 from the "Reading DTCs procedure".
3. Turn key on or engine running.
4. Move the cursor to **PID/DATA MONITOR AND RECORD**. Press the trigger.

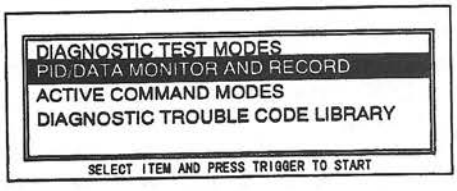

W6U101WKB

5. Move cursor to PID values to view. Press trigger.

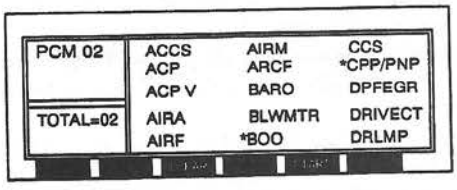

W6U101WKC

6. Select **START** to begin.
7. When ready to capture and store the select PIDs, press trigger button.
8. Press trigger again when ready to save information.
9. The information is now located in the main recording area. Store to a viewing area before starting another recording or the data will be overwritten.

Playback of Stored PIDs Procedure

Note

- Look for abnormal behavior or values that are clearly incorrect. Inspect the signals for abrupt or unexpected changes.
- Look for agreement in related signals.
- Make sure signals act in proper sequence.

1. Select **VIEW RECORDER AREAS**.
2. Select a view area.
3. Select up to the four PIDs to review in the table format or two PIDs to review in the graph mode.
4. Table format: Scroll through the PID data while analyzing the information. Look for sudden drops or spikes in the values.
   For example:
   Notice the major jump in the TP voltage while scrolling through the information. This example would require a smooth and progressive throttle pedal travel during a key ON and engine OFF mode.

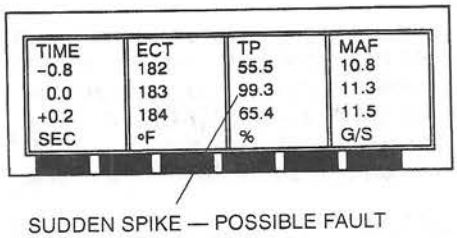

W6U101WKD

5. Graph format: Scroll through the PID data while analyzing the information. Look for sudden drops or spikes in the linear lines showing the transformation of values to the line graph.

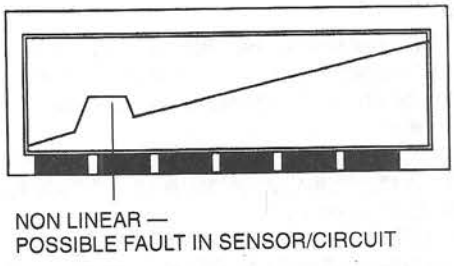

W6U101WKE

Output Test Mode Procedure

1. Perform the "New generation star (NGS) tester hook-up procedure."
2. Perform step 1 through step 9 from the "Reading DTCs procedure".
3. Turn key on.
4. Move the cursor to **ACTIVE COMMAND MODES**. Press the trigger key to enter this selection.

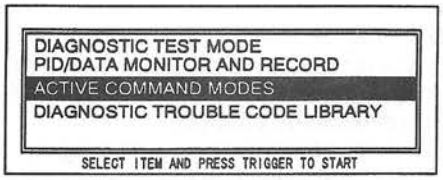

W6U101WKF

5. Move the **OUTPUT TEST MODE**. Press the trigger key to enter this selection.
6. Press **MODE** (Key #3) repeatedly to change the mode from **ALL ON** to **LOW FAN, HIGH FAN**, and **ALL OFF**. Return the mode to **ALL ON**.
7. Press **START** (Key #4) to run the fuel pump. Press **STOP** (Key #4) to turn off the fuel pump.
8. To open and close certain actuators in the emission system, press **PIDS** (Key #7).
9. Press **CLEAR** (Key #5) to clear previous selected **PIDS**.

Note
- To select desired PIDs, place the shaded bar over the item(s) and press trigger. A star symbol appears next to the item when it's selected. Press **START** (Key #7). The selected PID(s) and values appear.
- You can only select 30 PIDs at a time.

10. Press **START** (Key #4) to turn on the fuel pump. Observe the values change from **OFF** to **ON** or from **0%** to **100%**. Press **STOP** (Key #4) to turn off the fuel pump.
11. Press **CANCEL**.

Oxygen Sensor Monitoring Test Results Access Procedure

Note
- The Oxygen Sensor Monitoring Test Results allows access to on-board oxygen sensor fault limits and actual values during OBD II drive mode.

1. Perform the "New generation star (NGS) tester hook-up procedure."
2. Select **VEHICLE AND ENGINE SELECTION**.
3. Select **NEW VEHICLE YEAR & MODEL**. Select year, engine, model with appropriate qualifier, if needed. (Refer to Retrieving DTCs Procedure.)

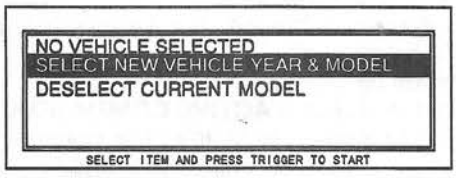

W6U101WKJ

4. Turn key on.
5. Move cursor to **GENERIC OBD II FUNCTIONS**. Press trigger to enter this selection.
6. Select **OXYGEN SENSOR TESTS**. Press trigger.
7. Select **MANUFACTURING SPECIFIC TEST ID**. Press trigger.
8. Scroll up to the test number (**41H**) and press trigger.

OBD II Drive Mode
- To complete the OBD II system check, following drive mode procedure must be performed.

Caution
- **When this procedure is carried out, be sure to drive the vehicle at the lawful speed and pay attention to the other vehicles. When the NGS tester is used to check the vehicle speed while driving, be sure to have another worker on the passenger seat, or record the data in the tester by the using the "PID/DATA MONITOR AND RECORD" function and check later.**

Note
- Vehicle speed and engine speed detected by the PCM may differ from that indicated by the speedometer and the tachometer. Check the vehicle speed and engine speed during driving mode by using the NGS tester.
- If the OBD II system check is not completed while the drive mode procedure carried out, the OBD II system may have detected the malfunction.
- The vehicle shold cold soak for at least 8 hours before performing the evaporative system check.

Procedure
1. Connect NGS tester to data link connector.
2. Start engine.
3. Drive vehicle and accelerate to 65 km/h {40 mph} within 20 seconds.
4. Fix throttle opening and drive vehicle at 56—73 km/h {35—45 mph} for 340 seconds.
5. Accerate to 80—93 km/h {50—58 mph} (KL MTX), 80—96 km/h {50—60 mph} (KL ATX) within 10 seconds.
6. Fix throttle opening and drive vehicle for at least 2 minutes.
7. Return to idle 20 seconds.
8. Stop vehicle and perform OBD II system check by using "ON BOARD SYSTEM READINESS" mode of ganeric OBD II function.
9. If supported test is not complete, repeat steps 2 to step 8.

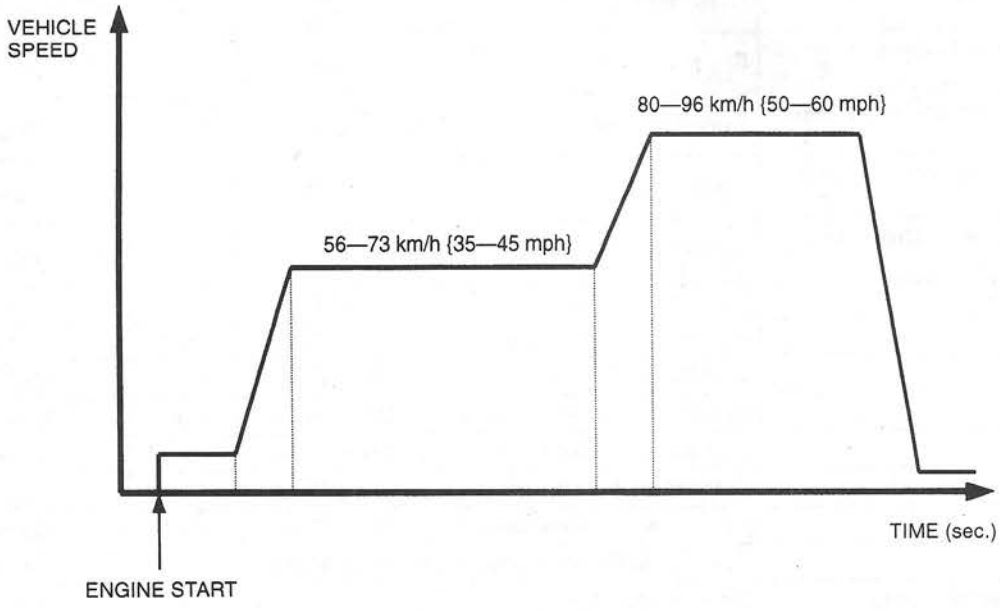

W6U101WKN

Diagnostic Trouble Code Table

DTC No.	Diagnosed Circuit	Condition	MIL	DC*1	OBD Monitor*2
P0102	Mass air flow sensor	Circuit low input	ON	1	CCM
P0103	Mass air flow sensor	Circuit high input	ON	1	CCM
P0106	EGR boost sensor	Circuit performance	ON	1	CCM
P0107	EGR boost sensor	Circuit low input	ON	1	CCM
P0108	EGR boost sensor	Circuit high input	ON	1	CCM
P0112	Intake air temperature sensor	Circuit low input	ON	1	CCM
P0113	Intake air temperature sensor	Circuit high input	ON	1	CCM
P0117	Engine coolant temperature sensor	Circuit low input	ON	1	CCM
P0118	Engine coolant temperature sensor	Circuit high input	ON	1	CCM
P0122	Throttle position sensor	Circuit low input	ON	1	CCM
P0123	Throttle position sensor	Circuit high input	ON	1	CCM
P0125	Engine coolant temperature sensor	Insufficient coolant temperature to enter a closed loop fuel control	ON	2	CCM
P0133	Heated oxygen sensor (Front RH)	Circuit slow response	ON	2	O_2 sensor
P0135	Heated oxygen sensor heater (Front RH)	Circuit malfunction	ON	2	O_2 sensor heater
P0136	Heated oxygen sensor (Middle)	Circuit malfunction	ON	2	O_2 sensor
P0141	Heated oxygen sensor heater (Middle)	Circuit malfunction	ON	2	CCM
P0142	Heated oxygen sensor (Rear)	Circuit malfunction	ON	2	O_2 sensor
P0147	Heated oxygen sensor heater (Rear)	Circuit malfunction	ON	2	CCM
P0153	Heated oxygen sensor (Front LH)	Circuit slow response	ON	2	O_2 sensor

DTC No.	Diagnosed Circuit	Condition	MIL	DC*1	OBD Monitor*2
P0155	Heated oxygen sensor (Front LH)	Circuit malfunction	ON	2	O_2 sensor heater
P0171	Adaptive fuel control system (RH)	System too lean	ON	2	Fuel
P0172	Adaptive fuel control system (RH)	System too rich	ON	2	Fuel
P0174	Adaptive fuel control system (LH)	System too lean	ON	2	Fuel
P0175	Adaptive fuel control system (LH)	System too rich	ON	2	Fuel
P0230	Fuel pump	Circuit malfunction	OFF	—	Other
P0300	Ignition	Random misfire detected	ON or Flash	1 or 2	Misfire
P0301	Ignition	Cylinder No.1 misfire detected	ON or Flash	1 or 2	Misfire
P0302	Ignition	Cylinder No.2 misfire detected	ON or Flash	1 or 2	Misfire
P0303	Ignition	Cylinder No.3 misfire detected	ON or Flash	1 or 2	Misfire
P0304	Ignition	Cylinder No.4 misfire detected	ON or Flash	1 or 2	Misfire
P0305	Ignition	Cylinder No.5 misfire detected	ON or Flash	1 or 2	Misfire
P0306	Ignition	Cylinder No.6 misfire detected	ON or Flash	1 or 2	Misfire
P0320	Ignition engine speed	Circuit malfunction	ON	1	CCM
P0325	Knock sensor	Circuit malfunction	OFF	—	Other
P0340	Camshaft position sensor	Circuit malfunction (CID)	ON	1	CCM
P0400	Exhaust gas recirculation (EGR)	Flow malfunction	ON	2	EGR
P0420	Catalyst system	Efficiency below threshold	ON	2	Catalyst
P0442	Evaporative emission control system	Leak detected (Small leak)	ON	2	Purge
P0443	Evaporative emission control system	Purge solenoid valve circuit malfunction	ON	2	CCM
P0446	Evaporative emission control system	Vent control malfunction	ON	2	Purge
P0452	Evaporative emission control system	Fuel tank pressure sensor low input	ON	2	CCM
P0453	Evaporative emission control system	Fuel tank pressure sensor high input	ON	2	CCM
P0455	Evaporative emission control system	Leak detected (Gross leak)	ON	2	Purge
P0460	Fuel gauge sender unit	Circuit malfunction (Open/short and functional)	OFF	—	Other
P0500	Vehicle speed sensor	Sensor malfunction	ON	2	CCM
P0505	Idle air control system	System malfunction	OFF	—	Other
P0603	ECM/PCM	Keep alive memory (KAM) test error	OFF	—	Other
P0605	ECM/PCM	Read only memory (ROM) test error	OFF	—	Other
P0703	Brake switch	Input malfunction	OFF	—	Other
P0704	Clutch switch	Input circuit malfunction	OFF	2	Other
P0705	Transaxle range switch	Circuit malfunction (Short)	☞ 05–01B AUTOMATIC TRANSAXLE ON BOARD DIAGNOSIS [GF4A-EL]		
P0706	Transaxle range switch	Circuit malfunction (Open)	☞ 05–01B AUTOMATIC TRANSAXLE ON BOARD DIAGNOSIS [GF4A-EL]		
P0710	Transaxle fluid temperature sensor	Circuit malfunction (Short/open)	☞ 05–01B AUTOMATIC TRANSAXLE ON BOARD DIAGNOSIS [GF4A-EL]		
P0711	Transaxle fluid temperature sensor	Circuit malfunction (Stuck)	☞ 05–01B AUTOMATIC TRANSAXLE ON BOARD DIAGNOSIS [GF4A-EL]		

DTC No.	Diagnosed Circuit	Condition	MIL	DC*1	OBD Monitor*2
P0715	Input/turbine speed sensor	Insufficient input from TSS sensor	☞ 05–01B AUTOMATIC TRANSAXLE ON BOARD DIAGNOSIS [GF4A-EL]		
P0731	Shift solenoid A, shift solenoid B or internal parts	Incorrect 1GR ratio	☞ 05–01B AUTOMATIC TRANSAXLE ON BOARD DIAGNOSIS [GF4A-EL]		
P0732	Shift solenoid A, shift solenoid B or internal parts	Incorrect 2GR ratio	☞ 05–01B AUTOMATIC TRANSAXLE ON BOARD DIAGNOSIS [GF4A-EL]		
P0733	Shift solenoid A, shift solenoid B or internal parts	Incorrect 3GR ratio	☞ 05–01B AUTOMATIC TRANSAXLE ON BOARD DIAGNOSIS [GF4A-EL]		
P0734	Shift solenoid A, shift solenoid B or internal parts	Incorrect 4GR ratio	☞ 05–01B AUTOMATIC TRANSAXLE ON BOARD DIAGNOSIS [GF4A-EL]		
P0740	Torque converter clutch	Circuit malfunction	☞ 05–01B AUTOMATIC TRANSAXLE ON BOARD DIAGNOSIS [GF4A-EL]		
P0743	TCC control solenoid	TCC control solenoid circuit failure during self-test	☞ 05–01B AUTOMATIC TRANSAXLE ON BOARD DIAGNOSIS [GF4A-EL]		
P0745	Pressure control solenoid	Malfunction	☞ 05–01B AUTOMATIC TRANSAXLE ON BOARD DIAGNOSIS [GF4A-EL]		
P0750	Shift solenoid A	Shift solenoid A circuit failure	☞ 05–01B AUTOMATIC TRANSAXLE ON BOARD DIAGNOSIS [GF4A-EL]		
P0755	Shift solenoid B	Shift solenoid B circuit failure	☞ 05–01B AUTOMATIC TRANSAXLE ON BOARD DIAGNOSIS [GF4A-EL]		
P0760	Shift solenoid C	Shift solenoid C circuit failure	☞ 05–01B AUTOMATIC TRANSAXLE ON BOARD DIAGNOSIS [GF4A-EL]		
P1001	KOER aborted	KOER not able to complete	OFF	—	—
P1100	Mass air flow sensor	Sensor intermittent	OFF	—	Other
P1101	Mass air flow sensor	Input signal out of self-test range	OFF	—	Other
P1112	Intake air temperature sensor	Sensor intermittent	OFF	—	Other
P1116	Engine coolant temperature sensor	Input signal out of self-test range	OFF	—	Other
P1117	Engine coolant temperate sensor	Sensor intermittent	OFF	—	Other
P1120	Throttle position sensor	Out of range low	ON	1	CCM
P1121	Throttle position sensor	Input signal inconsistent with MAF sensor	ON	1	CCM
P1124	Throttle position sensor	Input signal out of self-test range	OFF	—	Other
P1125	Throttle position sensor	Circuit intermittent	OFF	—	CCM
P1127	Heated oxygen sensor heater	Exhaust not warm enough	OFF	—	Other
P1130	Heated oxygen sensor (Front RH)	Lack of heated oxygen sensor (Front RH). Adaptive fuel at limit	ON	2	O_2 sensor
P1131	Heated oxygen sensor (Front RH)	Lack of heated oxygen sensor (Front RH). Sensor indicates lean	ON	2	O_2 sensor
P1132	Heated oxygen sensor (Front RH)	Lack of heated oxygen sensor (Front RH). Sensor indicates rich	ON	2	O_2 sensor
P1137	Heated oxygen sensor (Middle)	Lack of heated oxygen sensor (Middle). Sensor indicate lean	OFF	—	Other
P1138	Heated oxygen sensor (Middle)	Lack of heated oxygen sensor (Middle). Sensor indicates rich	OFF	—	Other
P1143	Heated oxygen sensor (Rear)	Lack of heated oxygen sensor (Rear). Sensor indicate lean	OFF	—	Other

DTC No.	Diagnosed Circuit	Condition	MIL	DC*1	OBD Monitor*2
P1144	Heated oxygen sensor (Rear)	Lack of heated oxygen sensor (Rear). Sensor indicates rich	OFF	—	Other
P1150	Heated oxygen sensor (Front LH)	Lack of heated oxygen sensor (Front LH). Adaptive fuel at limit	ON	2	O_2 sensor
P1151	Heated oxygen sensor (Front LH)	Lack of heated oxygen sensor (Front LH). Sensor indicates lean	ON	2	O_2 sensor
P1152	Heated oxygen sensor (Front LH)	Lack of heated oxygen sensor (Front LH). Sensor indicates rich	ON	2	O_2 sensor
P1250	Fuel pressure regulator control solenoid valve	Circuit malfunction	OFF	—	Other
P1409	EGR valve (Stepper motor)	Coil malfunction	ON	2	CCM
P1410	EGR boost sensor/EGR boost solenoid valve	Sensor/solenoid frozen	OFF	—	Other
P1450	Evaporative emission control system	Unable to bleed up fuel tank vacuum	ON	2	Purge
P1451	Evaporative emission control system	CDCV circuit malfunction (Open/short)	ON	2	CCM
P1460	Wide open throttle air conditioning cutoff	Circuit malfunction	OFF	—	Other
P1464	Air conditioner (A/C)	Demand out of self-test range	OFF	—	Other
P1474	Fan control system	Cooling fan control primary circuit malfunction	OFF	—	Other
P1479	Fan control system	Condenser fan control primary circuit malfunction	OFF	—	Other
P1487	EGR boost solenoid valve	Circuit malfunction	OFF	—	Other
P1501	Vehicle speed sensor	Input signal out of self-test range	OFF	—	Other
P1504	Idle air control (IAC) system	Circuit malfunction	ON	2	CCM
P1506	Idle air control (IAC) system	Overspeed error	ON	2	CCM
P1507	Idle air control (IAC) system	Underspeed error	ON	2	CCM
P1602	Immobilizer system	Immobilizer unit – PCM communication error	OFF	—	Other
P1603	Immobilizer system	Code word unregistered in PCM	OFF	—	Other
P1604	Immobilizer system	Key ID number unregistered in PCM	OFF	—	Other
P1621	Immobilizer system	Code word does not match after engine cranking	OFF	—	Other
P1622	Immobilizer system	Key ID number does not match	OFF	—	Other
P1623	Immobilizer system	Code word or key ID number write/read error in PCM	OFF	—	Other
P1624	Immobilizer system	Immobilizer system communication counter=0	OFF	—	Other
P1650	Power steering pressure switch	Out of self-test range	OFF	—	Other
P1652	Power steering pressure switch	IAC monitor disable by PSP switch failed on	ON	2	CCM
P1703	Brake switch	Out of self-test range	☞ 05–01B AUTOMATIC TRANSAXLE ON BOARD DIAGNOSIS [GF4A-EL]		
P1705	Transaxle range switch	Out of self-test range	☞ 05–01B AUTOMATIC TRANSAXLE ON BOARD DIAGNOSIS [GF4A-EL]		

DTC No.	Diagnosed Circuit	Condition	MIL	DC*1	OBD Monitor*2
P1765	3–2 timing control solenoid	Malfunction	☞ 05–01B AUTOMATIC TRANSAXLE ON BOARD DIAGNOSIS [GF4A-EL]		
P1780	O/D OFF switch	Circuit malfunction (Open, short)	☞ 05–01B AUTOMATIC TRANSAXLE ON BOARD DIAGNOSIS [GF4A-EL]		

*1 : DC signifies the number of consecutive drive cycles required to illuminate the MIL.

*2 : Appropriate OBD II Monitor.

DTC P0102	MAF sensor circuit low input
DESCRIPTION	• Diagnostic Trouble Code (DTC) P0102 indicates MAF signal went below 0.39 volts (refer to Voltage to Mass Air Flow Conversion Table) sometime during normal engine operation (Continuous)

[Possible Cause]

- Damaged MAF sensor
- MAF sensor disconnected
- MAF circuit open
- Power circuit open
- Ground circuit open
- MAF circuit shorted to ground
- Air Intake Leak (near MAF sensor)
- Throttle Position (TP) system (possible closed throttle indication)
- Damaged PCM

STEP	INSPECTION		ACTION
1	CHECK MAF SIGNAL LOW INPUT TO PCM • Check broken/loose air outlet tube clamps (throttle body and air cleaner component ends), cracks/holes in air outlet tube, worn gaskets between MAF sensor and air cleaner component. Service as necessary. • Start engine and bring to idle. **Note** • If KOER DTC P0505 is present, go to Diagnostic Trouble Code Charts. If stabilized idle is not under 700 rpm, go to ENGINE SYMPTOM TROUBLESHOOTING. • Run engine up 1500 rpm for 5 seconds, then bring it back to idle. • Access MAF PID with NGS tester. • **Is MAF PID less than specified value?** ☞ 01–40B MASS AIR FLOW SENSOR INSPECTION [KL].	Yes	MAF sensor signal is not as specified. Go to next step.
		No	**For Key on engine running (KOER) reading between 0.60 and 1.00 volt:** Go to step 10. **All others:** Go to step 13.
2	CHECK MAF SENSOR POWER CIRCUIT VOLTAGE • Key off. • Disconnect MAF sensor. • Key on, engine off. • Measure voltage between power circuit at MAF sensor vehicle harness connector and battery negative post. • **Is voltage greater than 10.5 volts?**	Yes	Power harness circuit from MAF sensor to battery negative post okay. Go to next step.
		No	Service open power circuit. RESET PCM to completely clear DTCs. ☞ After Repair Procedure COMPLETE OBD II Drive Mode. RETURN OBD Test.
3	CHECK CONTINUITY OF MAF SENSOR POWER CIRCUIT • Key off. • MAF sensor disconnected. • Disconnect PCM. Inspect for damaged or pushed out pins, corrosion, loose wires, etc. Service as necessary. • Install breakout box. Leave PCM disconnected. • Measure resistance between power circuit at MAF sensor vehicle harness connector and Test Pin 71 or 97 at breakout box. • **Is resistance less than 5.0 ohms?**	Yes	Power harness circuit to PCM is okay. Go to next step.
		No	Service open power harness circuit. REMOVE breakout box. RECONNECT all components. RESET PCM to completely clear DTCs. ☞ After Repair Procedure COMPLETE OBD II Drive Mode. RERUN OBD Test.

STEP	INSPECTION		ACTION
4	CHECK MAF SIGNAL CIRCUIT FOR SHORTS TO GROUND CIRCUIT • Key off. • MAF sensor disconnected. • Breakout box installed, PCM disconnected. • Disconnect NGS tester from DLC. • Measure resistance between Test Pin 88 or Test Pins 36 and 24 or 103 at breakout box. • **Is each resistance greater than 10,000 ohms?**	Yes	MAF signal circuit and GROUND harness circuits to PCM are okay. RECONNECT NGS tester. Go to next step.
		No	Service short circuit between MAF signal and GROUND or MAF RTN. REMOVE breakout box. RECONNECT all components. RESET PCM to completely clear DTCs. ☞ After Repair Procedure COMPLETE OBD II Drive Mode. RERUN OBD Test.
5	CHECK CONTINUITY OF MAF SIGNAL CIRCUIT • Key off. • MAF sensor disconnected. • Breakout box installed, PCM disconnected. • Measure resistance between MAF circuit at MAF sensor vehicle harness connector and Test Pin 88 at breakout box. • **Is resistance less than 5.0 ohms?**	Yes	MAF signal circuit to PCM is okay. Go to next step.
		No	SERVICE open in MAF signal circuit. REMOVE breakout box. RECONNECT all components. RESET PCM to completely clear DTCs. ☞ After Repair Procedure COMPLETE OBD II Drive Mode. RERUN OBD Test.
6	CHECK GROUND CIRCUIT TO MAF SENSOR • Key off. • MAF sensor disconnected. • Breakout box installed. • Key on, engine off. • Measure voltage between power circuit and ground circuit at MAF sensor vehicle harness connector. • **Is voltage greater than 10.5 volts?**	Yes	Ground circuit from battery negative post to MAF sensor is okay. Go to step 8.
		No	Go to next step.
7	CHECK MAF SENSOR GROUND CIRCUIT CONTINUITY • Key off. • MAF sensor disconnected. • Breakout box installed. • Disconnect PCM. • Disconnect NGS tester from DLC. • Measure resistance between ground circuit at MAF sensor vehicle harness connector and battery negative post. • **Is resistance less than 10 ohms?**	Yes	Ground harness circuit to MAF sensor is okay. RECONNECT NGS tester. Go to next step.
		No	SERVICE open in Ground harness circuit. REMOVE breakout box. RECONNECT all components. RESET PCM to completely clear DTCs. ☞ After Repair Procedure COMPLETE OBD II Drive Mode. RERUN OBD Test.
8	CHECK PCM GROUND CIRCUIT (BETWEEN PCM AND MAF SENSOR GROUND CIRCUIT) CONTINUITY • Key off. • MAF sensor disconnected. • Breakout box installed, PCM disconnected. • Measure resistance between PCM ground circuit at MAF sensor vehicle harness connector and Test Pin 36 at breakout box. • **Is resistance less than 5.0 ohms?**	Yes	PCM ground harness circuit to PCM is okay. Go to next step.
		No	SERVICE open in PCM ground harness circuit. REMOVE breakout box. RECONNECT all components. RESET PCM to completely clear DTCs. ☞ After Repair Procedure COMPLETE OBD II Drive Mode. RERUN OBD Test.
9	CHECK MAF SIGNAL CIRCUIT FOR SHORT TO GROUND IN PCM • Key off. • MAF sensor disconnected. • Breakout box installed. • Reconnect PCM to breakout box. • Disconnect NGS tester from DLC (if applicable). • Measure resistance between Test Pin 88 and Test Pins 36 and 24 or 103 at breakout box. • **Is each resistance greater than 10,000 ohms?**	Yes	RECONNECT NGS tester. Go to next step.
		No	MAF signal circuit short to ground in PCM. REMOVE breakout box. RECONNECT MAF sensor. RESET PCM to completely clear DTCs. ☞ After Repair Procedure COMPLETE OBD II Drive Mode. RERUN OBD Test.

STEP	INSPECTION		ACTION
10	CHECK MAF SIGNAL CIRCUIT OUTPUT • Key off. • MAF sensor connected. • Breakout box installed, PCM connected. • Key on, engine running. **Note** • If stabilized idle is not stabilized at minimum of 700 rpm, go to ENGINE SYMPTOM TROUBLESHOOTING. • Measure voltage between Test Pin 88 at breakout box and battery negative post. • **Is voltage at idle between 0.34 and 1.96 volts?**	Yes	MAF signal circuit to PCM is okay. Go to next step.
		No	MAF signal circuit or ground circuit is open in MAF sensor, or MAF signal circuit is shorted to PCM ground circuit in MAF sensor. REPLACE MAF sensor. REMOVE breakout box. RECONNECT PCM. RESET PCM to completely clear DTCs. ☞ After Repair Procedure COMPLETE OBD II Drive Mode. RERUN OBD Test.
11	VERIFY MAF SIGNAL CIRCUIT INPUT AND OUTPUT • Key off. • MAF sensor connected. • Breakout box installed, PCM connected. • Key on, engine running. • Measure voltage between Test Pin 88 and Test Pin 36 at breakout box. • **Is voltage between 0.34 and 1.96 volts?**	Yes	PCM ground circuit in MAF sensor is okay. Go to next step.
		No	PCM ground circuit open in MAF sensor. REPLACE MAF sensor. REMOVE breakout box. RECONNECT PCM. RESET PCM to completely clear DTCs. ☞ After Repair Procedure COMPLETE OBD II Drive Mode. RERUN OBD Test.
12	CHECK MAF SIGNAL CIRCUIT OUTPUT WITH NGS TESTER • Key off. • MAF sensor connected. • Breakout box installed, PCM connected. • Key on, engine running. • Access MAF PID with NGS tester at idle. • **Is MAF PID within specified value?** ☞ 01–40B MASS AIR FLOW SENSOR INSPECTION [KL].	Yes	Unable to identify fault at this time. Check possible intermittent. Go to ENGINE SYMPTOM TROUBLESHOOTING No.27
		No	MAF signal circuit or PCM ground circuit is open or shorted together in PCM. REPLACE PCM. REMOVE breakout box. RECONNECT PCM. RESET PCM to completely clear DTCs. ☞ After Repair Procedure COMPLETE OBD II Drive Mode. RERUN OBD Test.
13	CHECK MAF SENSOR OUTPUT VOLTAGE **Note** • DTC P1101 could be generated by low charged vehicle battery or garage exhaust ventilation system. Service battery as necessary. Then remove ventilation system and properly vent to outside atmosphere. Return key on engine off (KOEO) Self-Test. • Key off. • Check that MAF sensor in corrected. If not, service as necessary. • Disconnect PCM. Inspect for damaged or pushed out pins, corrosion, loose wires, etc. Service as necessary. • NGS tester connected. • Install breakout box, connect PCM to breakout box. • Key on, engine off. • Measure between Test Pin 88 and Test Pins 24 or 103 at breakout box. • **Is voltage greater than 0.20 volts?**	Yes	MAF signal voltage is greater than expected. Go to step 7.
		No	Go to step 3.

DTC P0103	MAF sensor circuit high input
DESCRIPTION	• DTC P0103 indicates that MAF sensor signal went above 4.35 volts during normal engine operation (continuous) or during self test (KOEO)

[Possible Cause]
- Blocked MAF sensor screen
- Damaged MAF sensor
- MAF signal harness short to power circuit
- Damaged PCM

STEP	INSPECTION		ACTION
1	CHECK MAF SIGNAL HIGH INPUT TO PCM • Start engine and bring to idle. **Note** • If KOER DTC P0505 is present, go to Code No. P0505. If stabilized idle is not under 700 rpm, go to ENGINE SYMPTOM TROUBLESHOOTING [KL]. • Run throttle up to 1500 rpm for 5 seconds, and bring it back to idle. • Access MAF PID with NGS tester. • MAF PID should be greater than 3.9 volts. • Key off. • Disconnect MAF sensor. • Jumper ground and PCM ground (between PCM and MAF sensor ground circuit) pins at MAF sensor vehicle harness connector. • Key on, engine running. • Again access MAF PID with NGS tester. • **Did MAF PID drop from previous reading less than specified value?** ☞ 01–40B MASS AIR FLOW SENSOR INSPECTION [KL].	Yes	MAF signal circuit shorted to power circuit in MAF sensor. REMOVE Jumper. REPLACE MAF sensor. RESET PCM to completely clear DTCs. ☞ After Repair Procedure COMPLETE OBD II Drive Mode. RERUN OBD Test.
		No	Power short circuit, but not in MAF sensor. REMOVE Jumper. Go to next step.
2	RERUN SELF-TEST WITH MAF SENSOR DISCONNECTED • Key off. • Disconnect MAF sensor. • Disconnect PCM. • Inspect for damage or pushed out pins, corrosion loose wires, etc. Service as necessary. • Install breakout box. Leave PCM disconnected. • Key on, engine off. • Measure voltage between Test Pin 88 and Test pin 24 or 103 at breakout box. • **Is voltage greater than 10.5 volts?**	Yes	SERVICE short between MAF signal circuit and power circuit (excluding constant voltage circuit), in harness circuit. REMOVE breakout box. RECONNECT all components. RESET PCM to completely clear DTCs. ☞ After Repair Procedure COMPLETE OBD II Drive Mode. RERUN OBD Test.
		No	Go to next step.
3	CHECK MAF SIGNAL CIRCUIT FOR SHORT TO VPWR • Key off. • MAF sensor disconnected. • Disconnect NGS tester from DLC. • Measure resistance between Test Pin 88 and Test Pins 71 or 97 at breakout box. • **Is resistance greater than 10,000 ohms?**	Yes	MAF signal circuit shorted to power in PCM. REPLACE damaged PCM. REMOVE breakout box. RECONNECT MAF sensor. RESET PCM to completely clear DTCs. ☞ After Repair Procedure COMPLETE OBD II Drive Mode. RERUN OBD Test.
		No	SERVICE short between MAF signal circuit and constant voltage circuit in harness circuit. REMOVE breakout box. RECONNECT all components. RESET PCM to completely clear DTCs. ☞ After Repair Procedure COMPLETE OBD II Drive Mode. RERUN OBD Test.

Note
- DTC P0103 could be generated by foreign material blocking mass air flow sensor screen causing an air flow restriction. If contaminants are found on screen, check air filter installation in air cleaner tray and proper sealing of air cleaner and air tube before proceeding. Rerun OBD Test after repair.

DTC P0106	EGR boost sensor circuit input signal out of self-test range
DESCRIPTION	• DTC P0106 indicates that EGR boost sensor input signal is out of self-test range

[Possible Cause]
- Damaged EGR boost sensor
- Damaged EGR boost solenoid valve
- Damaged EGR boost solenoid valve to EGR boost sensor hose
- Damaged PCM
- Damaged harness connector
- Damaged harness

STEP	INSPECTION		ACTION
1	CHECK EGR BOOST SENSOR CONSTANT VOLTAGE • Key on, engine off. • EGR boost sensor disconnected. • Measure voltage between constant voltage circuit and ground circuit at EGR boost sensor vehicle harness connector. • Key off. • **Is voltage between 4.0 and 6.0 volts?**	Yes	Go to next step.
		No	REPAIR open in constant voltage circuit.
2	CHECK CONTINUITY OF EGR BOOST SENSOR HARNESS CIRCUITS • Key off. • EGR boost sensor disconnected. • Disconnect PCM. Inspect for damaged or pushed out pins, corrosion, loose wires, etc. Service as necessary. • Install breakout box, leave PCM disconnected. • Measure resistance between EGR boost signal circuit at EGR boost sensor vehicle harness connector and Test Pin 34 at breakout box. • Measure resistance between ground circuit at EGR boost sensor vehicle harness connector and Test Pin 91 at breakout box. • **Is each resistance less than 5 ohms?**	Yes	Go to next step.
		No	Service open in appropriate circuit. EGR boost sensor harness circuit. RESET PCM to completely clear DTCs. ☞ After Repair Procedure COMPLETE OBD II Drive Mode. Confirm repair by performing EGR portion of OBD II drive cycle to check for DTCs.
3	CHECK EGR BOOST SIGNAL CIRCUITS FOR SHORT TO GROUND AND POWER • Key off. • EGR boost sensor disconnected. • Breakout box installed, PCM disconnected. • Measure resistance between Test Pin 34 and Test Pins 91, 51 and 103 at breakout box. • Measure resistance between Test Pin 34 and Test Pins 71, 90 and 97 at breakout box. • **Is resistance greater than 10,000 ohms?**	Yes	Go to next step.
		No	SERVICE short in EGR boost signal circuit. REMOVE breakout box. RECONNECT all components. RESET PCM to completely clear DTCs. ☞ After Repair Procedure COMPLETE OBD II Drive Mode. Confirm repair by performing EGR portion of OBD II drive mode to check for DTCs.
4	CONFIRM EGR BOOST SOLENOID VACUUM LINES ARE NOT DAMAGED • Check all vacuum lines connected to EGR boost solenoid for damage, blockage etc. • **Do vacuum lines have any blockage or damage?**	Yes	Damaged vacuum lines can cause DTCs to be displayed. SERVICE damaged vacuum lines as necessary. RESET PCM to completely clear DTCs. ☞ After Repair Procedure COMPLETE OBD II Drive Mode. Confirm repair by performing EGR portion of OBD II drive mode to check for DTCs.
		No	Vacuum lines are operational and will not cause DTCs. Go to next step.

STEP	INSPECTION		ACTION
5	CHECK RESPONSE OF EGR BOOST SENSOR TO MANUALLY APPLIED SIGNAL • Key off. • Disconnect hose from EGR boost solenoid to EGR boost sensor. Check all vacuum lines connected to EGR boost solenoids for damage, blockage, etc. Service as necessary. • Breakout box installed, PCM connected. • Key on. • Using hand held pump, slowly apply and maintain –71 kPa {–533 mmHg, –21 inHg}, while measuring EGR boost sensor voltage response at Test Pin 34 of breakout box. • **Is voltage response between 0.8 and 1.5 volts?**	Yes	REMOVE vacuum pump. RECONNECT all components. Go to next step.
		No	REPLACE EGR boost sensor. REMOVE breakout box. RECONNECT all components. RESET PCM to completely clear DTCs. ☞ After Repair Procedure COMPLETE OBD II Drive Mode. Confirm repair by performing EGR portion of OBD II drive mode to check for DTCs.
6	CHECK POWER CIRCUIT AT EGR BOOST SOLENOID • Key off. • EGR boost solenoid disconnected. • Key on, engine idling. • Measure voltage between power circuit and chassis ground at EGR boost solenoid vehicle harness connector. • **Is EGR boost solenoid valve power voltage greater than 10.5 volts?**	Yes	Go to next step.
		No	SERVICE open in EGR boost solenoid power circuit. RECONNECT all components. RESET PCM to completely clear DTCs. ☞ After Repair Procedure COMPLETE OBD II Drive Mode. Confirm repair by performing EGR portion of OBD II drive cycle to check for DTCs.
7	CHECK RESISTANCE OF EGR BOOST SOLENOID • Key off. • EGR boost solenoid disconnected. • Measure solenoid resistance. • **Is resistance between 30 and 70 ohms?**	Yes	Go to next step.
		No	REPLACE EGR boost solenoid. RESET PCM to completely clear DTCs. ☞ After Repair Procedure COMPLETE OBD II Drive Mode. Confirm repair by performing EGR portion of OBD II drive cycle to check for DTCs.
8	CHECK EGR BOOST SOLENOID CIRCUIT CONTINUITY • Key off. • EGR boost solenoid disconnected. • Disconnect PCM. Inspect for damaged or pushed out pins, corrosion, loose wires, etc. Service as necessary. • Install breakout box. Leave PCM disconnected. • Measure resistance between Test Pin 98 at breakout box and EGR boost solenoid circuit at solenoid vehicle harness connector. • **Is resistance less than 5.0 ohms?**	Yes	Go to next step.
		No	SERVICE open in EGR boost solenoid harness circuit. REMOVE breakout box. RECONNECT all components. RESET PCM to completely clear DTCs. ☞ After Repair Procedure COMPLETE OBD II Drive Mode. Confirm repair by performing EGR portion of OBD II drive mode to check for DTCs.
9	CHECK EGR BOOST SOLENOID CIRCUIT FOR SHORT TO POWER AND GROUND • Key off. • EGR boost solenoid disconnected. • Breakout box installed, PCM disconnected. • Measure resistance between Test Pin 98 and Test Pins 71, 97 and 90 at breakout box. • Measure resistance between Test Pin 98 and Test Pins 51, 103 and 91 at breakout box. • **Is each resistance greater than 10,000 ohms?**	Yes	REMOVE breakout box. RECONNECT all components. Go to next step.
		No	SERVICE short in EGR boost solenoid harness circuit. REMOVE breakout box. RECONNECT all components. RESET PCM to completely clear DTCs. ☞ After Repair Procedure COMPLETE OBD II Drive Mode. Confirm repair by performing EGR portion of OBD II drive mode to check for DTCs.

STEP	INSPECTION		ACTION
10	CHECK EGR BOOST SOLENOID VALVE OPERATION • Key off. • Breakout box installed, PCM connected. • Disconnect vacuum line from intake manifold vacuum reservoir to EGR boost solenoid at EGR boost solenoid. • Install vacuum pump at input port of EGR boost solenoid, apply –27— –33 kPa {–203— –254 mmHg, –8— –10 inHg} of vacuum to EGR boost solenoid. • Disconnect vacuum line from barometric pressure to EGR boost sensor at Barometric Pressure Sensor install vacuum gauge at unattached end of vacuum line. • Key on. • Momentarily jumper to ground Test Pin 98 at breakout box to ground and observe vacuum gauge. • Key off. • **Was vacuum signal of 0— –3.3 kPa {0— –25 mmHg, 0— –1 inHg} indicated by vacuum gauge before Test Pins 98 and 51 were shorted and –27— –33 kPa {–203— –254 mmHg, –8— –10 inHg} after Pins were shorted?**	Yes	REPLACE damaged PCM. REMOVE breakout box. REMOVE vacuum gauge and vacuum pump. RECONNECT all components. RESET PCM to completely clear DTCs. ☞ After Repair Procedure COMPLETE OBD II Drive Mode. Confirm repair by performing EGR portion of OBD II drive mode to check for DTCs.
		No	REPLACE damaged EGR boost solenoid. REMOVE breakout box. REMOVE vacuum gauge and vacuum pump. RECONNECT all components. RESET PCM to completely clear DTCs. ☞ After Repair Procedure COMPLETE OBD II Drive Mode. Confirm repair by performing EGR portion of OBD II drive mode to check for DTCs.

DTC P0107	EGR boost sensor circuit input signal out of self-test range minimum
DESCRIPTION	• Continuous memory DTC P0107 indicates that EGR boost signal circuit input is less than self-test minimum

[Possible Cause]
- Damaged EGR boost sensor
- Damaged EGR boost solenoid valve
- Damaged EGR boost solenoid valve to EGR boost sensor hose
- Damaged PCM
- Damaged harness connector
- Damaged harness

STEP	INSPECTION		ACTION
1	CHECK EGR BOOST SENSOR CONSTANT VOLTAGE • Key on, engine off. • EGR boost sensor disconnected. • Measure voltage between constant voltage circuit and ground circuit at EGR boost sensor vehicle harness connector. • **Is voltage between 4.0 and 6.0 volts?**	Yes	Go to next step.
		No	REPAIR open in constant voltage circuit.
2	CHECK CONTINUITY OF EGR BOOST SENSOR SIGNAL CIRCUIT • Key off. • EGR boost sensor disconnected. • Disconnect PCM. Inspect for damaged or pushed out pins, corrosion, loose wires, etc. Service as necessary. • Install breakout box, leave PCM disconnected. • Measure resistance between EGR boost signal circuit at EGR boost sensor vehicle harness connector and Test Pin 34 at breakout box. • **Is resistance less than 5 ohms?**	Yes	Go to next step.
		No	RESET PCM to completely clear DTCs. ☞ After Repair Procedure COMPLETE OBD II Drive Mode. Confirm repair by performing EGR portion of OBD II drive mode to check for DTCs.
3	CHECK EGR BOOST SIGNAL CIRCUIT FOR SHORT TO GROUND • Key off. • EGR boost sensor disconnected. • Breakout box installed, PCM disconnect. • Measure resistance between Test Pin 34 and Test Pins 91, 51 and 103 at breakout box. • **Is resistance greater than 10,000 ohms?**	Yes	Go to next step.
		No	SERVICE short in EGR boost signal circuit. REMOVE breakout box. RECONNECT all components. RESET PCM to completely clear DTCs. ☞ After Repair Procedure COMPLETE OBD II Drive Mode. Confirm repair by performing EGR portion of OBD II drive mode to check for DTCs.
4	CHECK RESPONSE OF EGR BOOST SENSOR TO MANUALLY APPLIED SIGNAL • Key off. • Disconnect hose from EGR boost solenoid to EGR boost sensor. Inspect for damage, blockage, etc. Service as necessary. • Breakout box installed, PCM connected. • Key on. • Using hand held pump, slowly apply and maintain –71 kPa {–533 mmHg, –21 inHg}, while measuring EGR boost sensor voltage response at Test Pin 34 of breakout box. • **Is voltage response between 0.8 and 1.5 volts?**	Yes	REMOVE vacuum pump. RECONNECT all components. Go to DTC P0106 Troubleshooting step 5.
		No	REPLACE EGR boost sensor. REMOVE breakout box. RECONNECT all components. RESET PCM to completely clear DTCs. ☞ After Repair Procedure COMPLETE OBD II Drive Mode. Confirm repair by performing EGR portion of OBD II drive mode to check for DTCs.

DTC P0108	EGR boost sensor circuit input signal out of self-test range maximum
DESCRIPTION	• Continuous memory DTC P0108 indicates that EGR boost signal circuit input is greater than self-test maximum

[Possible Cause]
- Damaged EGR boost sensor
- Damaged EGR boost solenoid valve
- Damaged EGR boost solenoid valve to EGR boost sensor hose
- Damaged PCM
- Damaged harness connector
- Damaged harness

STEP	INSPECTION		ACTION
1	CHECK EGR BOOST SENSOR CONSTANT VOLTAGE • Key on, engine off. • EGR boost sensor disconnected. • Measure voltage between constant voltage circuit and ground circuit at EGR boost sensor vehicle harness connector. • **Is voltage between 4.0 and 6.0 volts?**	Yes	Go to next step.
		No	REPAIR open in constant voltage circuit.
2	CHECK CONTINUITY OF EGR BOOST SENSOR SIGNAL CIRCUIT • Key off. • EGR boost sensor disconnected. • Disconnect PCM. Inspect for damaged or pushed out pins, corrosion, loose wires, etc. Service as necessary. • Install breakout box. Leave PCM disconnected. • Measure resistance between ground circuit at EGR boost sensor vehicle harness connector and Test Pin 91 at breakout box. • **Is resistance less than 5.0 ohms?**	Yes	Go to next step.
		No	SERVICE open in EGR boost sensor signal circuit. RESET PCM to completely clear DTCs. ☞ After Repair Procedure COMPLETE OBD II Drive Mode. Confirm repair by performing EGR portion of OBD II drive mode to check for DTCs.
3	CHECK EGR BOOST SIGNAL CIRCUIT FOR SHORT TO POWER • Key off. • EGR boost sensor disconnected. • Breakout box installed, PCM disconnected. • Measure resistance between Test Pin 34 and Test Pins 71, 97 and 90 at breakout box. • **Is resistance greater than 10,000 ohms?**	Yes	Go to next step.
		No	SERVICE short in EGR boost signal circuit. REMOVE breakout box. RECONNECT all components. RESET PCM to completely clear DTCs. ☞ After Repair Procedure COMPLETE OBD II Drive Mode. Confirm repair by performing EGR portion of OBD II drive mode to check for DTCs.
4	CHECK RESPONSE OF EGR BOOST SENSOR TO MANUALLY APPLIED SIGNAL • Key off. • Disconnect hose from EGR boost solenoid to EGR boost sensor. Inspect for damage, blockage, etc. Service as necessary. • Breakout box installed, PCM connected. • Key on. • Using hand held pump, slowly apply and maintain –71 kPa {–533 mmHg, –21 inHg}, while measuring EGR boost sensor voltage response at Test Pin 34 of breakout box. • **Is voltage response between 0.8 and 1.5 volts?**	Yes	REMOVE vacuum pump. RECONNECT all components. Go to DTC P0106 Troubleshooting step 5.
		No	REPLACE EGR boost sensor. REMOVE breakout box. RECONNECT all components. RESET PCM to completely clear DTCs. ☞ After Repair Procedure COMPLETE OBD II Drive Mode. Confirm repair by performing EGR portion of OBD II drive mode to check for DTCs.

KOEO, KOER P0112 DTC P0117	IAT sensor circuit low input ECT sensor circuit low input
DESCRIPTION	• DTC P0117 (ECT) or P0112 (IAT) indicates corresponding sensor's signal is less than self-test minimum. IAT and ECT sensor minimum is 0.2 volt 121 °C {250 °F}

[Possible Cause]
- Grounded circuit in harness
- Damaged PCM
- Damaged sensor
- Improper harness connection

STEP	INSPECTION		ACTION
1	SIMULATE OPPOSITE SIGNAL TO PCM • Key off. • Disconnect vehicle harness from suspect sensor. Inspect for damaged or pushed out pins or loose wires, etc. Service as necessary. • Key on. • **Is ECT or IAT PID more than 4.2 volts (less than –40 °C {–40 °F})?**	Yes	REPLACE sensor. RECONNECT harness. RERUN OBD Test.
		No	Go to next step.
2	CHECK CONSTANT VOLTAGE CIRCUIT VOLTAGE AT THROTTLE POSITION SENSOR • Key off. • Disconnect suspected temperature sensor. • Disconnect TP sensor. • Key on, engine off. • Measure voltage between constant voltage circuit and ground circuit at TP sensor vehicle harness connector. • **Is voltage between 4.5 volts and 5.5 volts?**	Yes	RECONNECT TP sensor. Go to next step.
		No	REPAIR open in constant voltage circuit.
3	CHECK TEMPERATURE SENSOR SIGNAL CIRCUIT FOR SHORT TO GROUND • Key off. • Disconnect suspected temperature sensor. • Disconnect PCM. Inspect for damaged or pushed out pins, corrosion loose wires, etc. Service as necessary. • Install breakout box, leave PCM disconnected. Measure resistance between Test Pin 38 or 39 and Test Pins 91 at breakout box. • **Is each resistance greater than 10,000 ohms?**	Yes	REPLACE PCM. REMOVE breakout box. RECONNECT all components. RESET PCM to completely clear DTCs. ☞ After Repair Procedure COMPLETE OBD II Drive Mode. RERUN OBD Test.
		No	SENSOR short circuit. REMOVE breakout box. RECONNECT all components. RESET PCM to completely clear DTCs. ☞ After Repair Procedure COMPLETE OBD II Drive Mode. RERUN OBD Test.

CONTINUOUS DTC	**P0112**	**IAT sensor circuit low input**
	P0113	**IAT sensor circuit high input**
	P1112	**IAT sensor intermittent**
	P0117	**ECT sensor circuit low input**
	P0118	**ECT sensor circuit high input**
	P1117	**ECT sensor intermittent**
DESCRIPTION		• DTCs P0112, P1112 or P0113 (IAT DTCs) and P0117, P1117 or P0118 (ECT DTCs) are not received during key on engine off (KOEO) and key on engine running (KOER) self-test but are output during continuous Memory Self-Test and may be intermittent

[Possible Cause]
- Damaged IAT or ECT sensor
- Damaged harness
- Low coolant (ECT)
- Damaged harness connector
- Damaged PCM

STEP	INSPECTION		ACTION

1	CHECK ECT AND IAT OUTPUT WITH NGS TESTER
	• Key off.
	• NGS tester connected.
	• Key on.
	• Monitor ECT or IAT PID.
	• While observing PID, perform following:
	  • Tap on sensor to simulate road shock
	  • Wiggle sensor connector
	• **Is there any change in temperature reading?**
		Yes	DISCONNECT and INSPECT connectors.
			If okay, REPLACE sensor.
			RESET PCM to completely clear DTCs.
			☞ After Repair Procedure
			COMPLETE OBD II Drive Mode.
			RERUN OBD test.
			For Continuous DTCs P1112 and P1117, COMPLETE Comprehensive Component Monitor Drive Mode.

		No	Go to next step.
2	CHECK PCM VEHICLE HARNESS • Still monitoring PID. • While observing approprate PID, perform following: • Hold vehicle harness close to sensor connector. Wiggle, shake and bend small section of wiring harness while working toward PCM • **Is there any change in temperature reading?**	Yes	ISOLATE fault. SERVICE as necessary. RESET PCM to completely clear DTCs. ☞ After Repair Procedure COMPLETE OBD II Drive Mode. RERUN OBD test. For Continuous DTCs P1112 and P1117, COMPLETE Comprehensive Component Monitor Drive Mode.
		No	Go to next step.
3	CHECK PCM AND VEHICLE HARNESS CONNECTORS • Key off. • Disconnect PCM. Disconnect sensor connector. Inspect for damage, loose or pushed outpins, loose or poorly crimped wires. • **Are connectors and terminals okay?**	Yes	Fault is not present. RESET PCM to completely clear DTCs. ☞ After Repair Procedure COMPLETE OBD II Drive Mode. RERUN OBD Test. For Continuous DTCs P1112 and P1117, COMPLETE Comprehensive Component Monitor Drive Mode.
		No	SERVICE as necessary. RESET PCM to completely clear DTCs. ☞ After Repair Procedure COMPLETE OBD II Drive Mode. REURN OBD Test. For Continuous DTCs P1112 and P1117, COMPLETE Comprehensive Component Monitor Drive Mode.

KOEO, KOER P0113 DTC P0118	IAT sensor circuit high input ECT sensor circuit high input
DESCRIPTION	• DTC P0118 (ECT) or P0113 (IAT) indicates corresponding sensor signal is greater than self-test maximum. Maximum for ECT and IAT sensor is 4.6 volt or –50 °C {–46 °F}

[Possible Cause]
- Open in harness (IAT or ECT sensor)
- Damaged sensor
- Improper harness connection
- Damaged PCM

STEP	INSPECTION		ACTION
1	CHECK ECT AND IAT OUTPUT WITH NGS TESTER • Key off. • Disconnect suspect temperature sensor. • Connect jumper wire between sensor signal circuit and ground circuit at temperature sensor vehicle harness connector. • NGS tester installed. • Key on. **Note** • If any NGS tester communication problem exists, remove jumper wire immediately and go to step 3 • Access ECT or IAT PID. • **Is ECT or IAT PID less than 0.2 volts (greater than 120 °C {248 °F})?**	Yes	REPLACE suspect sensor. REMOVE jumper. RECONNECT vehicle harness. RERUN OBD Test.
		No	REMOVE jumper. Go to next step.
2	CHECK CONTINUITY OF SENSOR SIGNAL CIRCUIT AND GROUND CIRCUITS • Key off. • Disconnect suspected temperature sensor. • Disconnect PCM. Inspect for damaged or pushed out pins, corrosion, loose wire, etc. Service as necessary. • Install breakout box, leave PCM disconnected. • Measure resistance between sensor signal circuit at temperature sensor vehicle harness connector and Test Pin 38 or 39 at breakout box. • Measure resistance between ground circuit at temperature sensor vehicle harness connector and Test Pin 91 at breakout box. • **Is each resistance less than 5.0 ohms?**	Yes	REMOVE breakout box. RECONNECT all components. RERUN OBD Tests. Go to next step.
		No	SERVICE open circuit. REMOVE breakout box. RECONNECT all components. RERUN OBD Test.
3	CHECK FOR SENSOR SIGNAL CIRCUIT SHORTED TO CONSTANT VOLTAGE • Key off. • Disconnect suspected temperature sensor. • Disconnect PCM. Inspect for damaged or pushed out pins, corrosion, loose wires, etc. Service as necessary. • Install breakout box, leave PCM disconnected. • Measure resistance between sensor signal circuit Test Pin 38 or 39 and constant voltage circuit at breakout box. • **Is each resistance greater than 10,000 ohms?**	Yes	REPLACE PCM. REMOVE breakout box. RECONNECT all components. RERUN OBD Test.
		No	LOCATE and REPAIR short to constant voltage circuit. RERUN OBD Test.

DTC P0122	TP sensor circuit low input
DESCRIPTION	• DTC P0122 indicates Throttle Position (TP) Sensor signal is less than self-test minimum value of 3.43% (0.17 volts)

[Possible Cause]
- TP not seated properly (tightened down)
- Damaged TP sensor
- Open TP signal circuit or constant voltage circuit harness
- TP signal circuit harness short to ground
- Damaged PCM

STEP	INSPECTION		ACTION
1	DTC P0122 ATTEMPT TO GENERATE OPPOSITE DTC P0123 • Key off. • Disconnect TP sensor. Inspect for damaged or pushed out pins, corrosion, loose wires, etc. Service as necessary. • Leave TP sensor disconnected. • Jumper constant voltage circuit to TP signal circuit at TP sensor vehicle harness connector. • Key on, engine off. **Note** • If any NGS tester communication problem exists, remove jumper and go directly to step 4 • Access TP V PID with NGS tester. • Is TP V PID greater than 4.79 V? • **Is DTC P0123 present (ignore all other DTC's)?**	Yes	TP signal circuit shorted to TP sensor ground circuit in TP sensor, or TP signal circuit or constant voltage circuit open in TP sensor. REPLACE TP sensor. REMOVE jumper. RERUN OBD Test.
		No	Constant voltage circuit or TP signal circuit open in harness or PCM or TP signal circuit shorted to ground circuit in harness or PCM. REMOVE jumper. Go to next step.
2	CHECK CONSTANT VOLTAGE • Key off. • TP sensor disconnected. • Key on engine off. • Measure voltage between constant voltage circuit and ground circuit at TP sensor vehicle harness connector. • **Is voltage between 4.0 and 6.0 volts?**	Yes	Go to next step.
		No	KEY off. RECONNECT all components. REPAIR open in constant voltage circuit.
3	CHECK TP SIGNAL CIRCUIT CONTINUITY • Key off. • TP sensor disconnected. • Disconnect PCM Inspect for damaged or pushed out pins, corrosion, loose wires, etc. Service as necessary. • Install breakout box. Leave PCM disconnected. • Measure resistance between TP signal circuit at TP sensor vehicle harness connector and Test Pin 89 at breakout box. • **Is resistance less than 5.0 ohms?**	Yes	TP SIG harness circuit to PCM is okay. Go to next step.
		No	SERVICE open in TP signal harness circuit. REMOVE breakout box. RECONNECT all components. RESET PCM to completely clear DTCs. ☞ After Repair Procedure COMPLETE OBD II Drive Mode. RERUN OBD Test.
4	CHECK TP SIGNAL CIRCUIT FOR SHORTS TO PCM GROUND (BETWEEN PCM AND TP SENSOR GROUND CIRCUIT) OR GROUND • Key off. • TP sensor disconnected. • PCM disconnected. • Measure resistance between Test Pin 89 and test Pins 91 and 24 or 103 at breakout box. • **Is each resistance greater than 10,000 ohms?**	Yes	TP signal circuit open or shorted to PCM ground circuit (or ground circuit) in PCM. REPLACE PCM. REMOVE breakout box. RECONNECT all components. RESET PCM to completely clear DTCs. ☞ After Repair Procedure COMPLETE OBD II Drive Mode. RERUN OBD Test.
		No	SERVICE TP signal circuit shorted to PCM ground circuit (or ground circuit) in harness. REMOVE breakout box. RECONNECT all components. RESET PCM to completely clear DTCs. ☞ After Repair Procedure COMPLETE OBD II Drive Mode. RERUN OBD Test.

Note
- An intermittent fault can cause continuous memory DTC P0122. If DTC P0122 is still present after completing step 1 through 4, go to DTC P1125

DTC P0123	TP sensor circuit high input		
DESCRIPTION	• DTC P0123 indicates Throttle Position (TP) Sensor signal is greater than self-test maximum value of 92.27% (4.79 volts)		
[Possible Cause] • TP seated properly (tightened down) • Damaged TP sensor • TP signal circuit harness short to constant voltage circuit or TP sensor power circuit • Constant voltage circuit harness short to TP sensor power circuit • Open ground harness circuit • Damaged PCM			
STEP	**INSPECTION**		**ACTION**
1	ATTEMPT TO GENERATE DTC P0122 • Key off. • Disconnect TP sensor. Inspect for damaged or pushed out pins, corrosion, loose wires, etc. Service as necessary. • Leave TP sensor disconnected. • Key on, engine off. • Access TPV PID with NGS tester. • **Is TPV PID less than 0.17 volts?**	Yes	TP signal circuit is either shorted to constant voltage circuit in TP sensor or ground circuit is open in TP sensor or harness. Go to next step.
		No	TP signal circuit is shorted to constant voltage circuit or TP sensor power circuit. Go to step 3.
2	CHECK CONSTANT VOLTAGE • Key off. • TP sensor disconnected. • Key on, engine off. • Measure voltage between constant voltage circuit and ground circuit at TP sensor vehicle harness connector. • **Is voltage between 4.0 and 6.0 volts?**	Yes	TP signal circuit shorted to constant voltage circuit on ground circuit open in TP sensor. REPLACE TP sensor. RERUN OBD Test.
		No	KEY off. RECONNECT all components. REPAIR open in constant voltage circuit.
3	CHECK TP SENSOR CIRCUIT FOR SHORTS TO POWER • Key off. • TP sensor disconnected. • Disconnect PCM. Inspect for damaged or pushed out pins, corrosion, loose wires, etc. Service as necessary. • Install breakout box. Leave PCM disconnected. • Measure resistance between Test Pin 89 and Test Pins 90 and 71 or 97 at breakout box. • **Is each resistance greater than 10,000 ohms?**	Yes	TP signal circuit is shorted to constant voltage circuit or TP sensor power circuit in PCM. REPLACE PCM. REMOVE breakout box. RECONNECT TP sensor. RESET PCM to completely clear DTCs. ☞ After Repair Procedure COMPLETE OBD II Drive Mode. RERUN OBD Test.
		No	SERVICE Short circuit. REMOVE breakout box. RECONNECT all components. RESET PCM to completely clear DTCs. ☞ After Repair Procedure COMPLETE OBD II Drive Mode. RERUN OBD Test.

Note
- An intermittent fault can cause Continuous Memory DTC P0123. If Continuous Memory DTC P0123 is still present after completing step 1 through step 3, go to DTCs P1120 or P1125.

DTC P0125	Insufficient engine coolant temperature to enter a closed loop fuel control
DESCRIPTION	• DTC P0125 indicates ECT sensor has not achieved required temperature level to enter closed loop operating conditions within specified amount of time after starting engine. This code will light MIL

[Possible Cause]
- Insufficient warm up time
- Leaky or stuck open thermostat
- Low coolant

STEP	INSPECTION		ACTION
1	DTC P0125 INDICATES EXCESSIVE TIME TO ENTER CLOSED LOOP FUEL CONTROL • Check coolant level. • **Is coolant level correct?**	Yes	Check thermostat. ☞ 01–12 THERMOSTAT INSPECTION
		No	FILL to proper level. RESET PCM to completely clear DTCs. ☞ After Repair Procedure COMPLETE OBD II Drive Mode. COMPLETE Comprehensive Component Monitor Drive Mode. RERUN OBD Test.

DTC P0133 P0153	**Heated oxygen sensor (Front RH) (HO2S 11) circuit low response** **Heated oxygen sensor (Front LH) (HO2S 21) circuit low response**
DESCRIPTION	• DTC P0133 and P0153 indicate response rate of heated oxygen sensor is below some calibrated window

[Possible Cause]
- Contaminated heated oxygen sensor
- Exhaust leaks
- Shorted/open wires
- Improper fueling
- MAF sensor
- Air leaks
- Deteriorating heated oxygen sensor

STEP	INSPECTION		ACTION
1	PERFORM KEY ON ENGINE RUNNING (KOER) SELF TEST • Key on, engine running and engine at operating temperature. • Activate key on engine running (KOER) self-test. • **Is DTCs P1127 present during KOER self-test?**	Yes	Go to DTC chart and service DTCs P1127 as necessary.
		No	Go to next step.
2	HEATED OXYGEN SENSOR RESPONSE TEST • Key off. • NGS tester connected. • Key on, engine off. • Select Generic OBD II function from menu and trigger. • Press Continue. • Select Diagnostic Monitoring Test Results from menu and trigger. • Scroll to Test ID: 01 trigger and press start. • **Does measured value indicate greater than 614?**	Yes	RESET PCM to completely clear DTCs. ☞ After Repair Procedure COMPLETE OBD II Drive Mode. REPEAT step 1. If test results indicate pass, testing is complete.
		No	Oxygen sensor test results indicate fail. Go to next step.

3	CHECK FOR SOURCE OF POTENTIAL HEATED OXYGEN SENSOR CONTAMINATION
	• Investigate following items as potential source of heated oxygen sensor contamination.
	  • Use of unapproved silicone sealers
	  • Fuel contaminated by silicone additives
	  • Excessive oil burning (i.e. rings, valve seals and oil overfill)
	  • Glycol (antifreeze) leaking internally in engine
	  • Contaminated fuel
	  • Use of unapproved cleaning agents
	• **Are any of above conditions present?**
		Yes	SERVICE source of contamination.
			REPLACE heated oxygen sensor and oil/filter.
			RESET PCM to completely clear DTCs.
			☞ After Repair Procedure
			COMPLETE OBD II Drive Mode.
			RERUN OBD Test.

		No	Go to next step.

STEP	INSPECTION		ACTION

4	CHECK FOR UNMETERED AIR LEAKS
	Fuel calculations can be affected by unmetered air leaks.
	• Carefully inspect following areas for potential air leaks.
	  • Hoses connecting to MAF sensor
	  • Hoses connecting to throttle body
	  • Intake manifold gasket leaks
	  • Positive crankcase ventilation (PCV) disconnected
	  • Vacuum lines disconnected
	  • Improperly seated engine oil dipstick and tube
	  • Exhaust leaks at flanges and gaskets
	• **Are there any air leaks?**
		Yes	Air leaks located.
			SERVICE source of air leak.
			RESET PCM to completely clear DTCs.
			☞ After Repair Procedure
			COMPLETE OBD II Drive Mode.
			RERUN OBD Test.

		No	Go to next step.

5	CHECK OF HEATED OXYGEN SENSOR CIRCUIT WIRING WITH PCM CONNECTED
	• Key off.
	• PCM connected.
	• Disconnect suspected heated oxygen sensor.
	• Jumper heated oxygen sensor signal circuit to power circuit at heated oxygen sensor harness connector.
	• NGS tester connected.
	• Key on, engine off.
	• Access correct heated oxygen sensor PID.
	  • O2S11 (Front RH)
	  • O2S21 (Front LH)
	
	Note
	• Heated oxygen sensor displayed as O2S11 (Front RH), O2S12 (Middle), O2S21 (Front LH) or O2S13 (Rear) on NGS tester.
	
	• **Is voltage greater than 1.50 volts?**
		Yes	Heated oxygen sensor signal circuit is not faulty.
			REPLACE heated oxygen sensor.
			CHANGE oil/filter.
			RESET PCM to completely clear DTCs.
			☞ After Repair Procedure
			COMPLETE OBD II Drive Mode.
			RERUN OBD Test.

		No	Go to next step.

6	CHECK RESISTANCE OF HEATED OXYGEN SENSOR SIGNAL CIRCUIT
	• Key off.
	• Disconnect NGS tester.
	• Disconnect PCM. Inspect both ends of connect for bent or pushed out pins, corrosion or other damage. Service as necessary.
	• Install breakout box. Leave PCM disconnected.
	• Measure resistance between heated oxygen sensor signal Test Pin at breakout box and heated oxygen sensor harness connector.
	  • HO2S (Front RH)=Test Pin 60
	  • HO2S (Front LH)=Test Pin 87
	• Measure resistance between following test pin at breakout box and heated oxygen sensor harness connector.
	  • Ground=Test Pin 91
	• **Is resistance less than 5.0 ohms?**
		Yes	Go to next step.

		No	Resistance is high. SERVICE open circuit. REMOVE breakout box. RECONNECT all components. RESET PCM to completely clear DTCs. ☞ After Repair Procedure COMPLETE OBD II Drive Mode. RERUN OBD Test.

STEP	INSPECTION		ACTION

7	CHECK FOR SHORT IN HEATED OXYGEN SENSOR CIRCUIT
	• Key off.
	• Breakout box installed. PCM disconnected.
	• Measure resistance between heated oxygen sensor signal Test Pin at breakout box and power circuit and heated oxygen sensor signal Test Pin and ground circuit at breakout box.
	  • HO2S (Front RH)=Test Pin 60
	  • HO2S (Front LH)=Test Pin 87
	  • Power circuit=Test Pin 71/97
	  • Ground=Test Pin 91
	• **Is resistance greater than 10,000 ohms?**
		Yes	REPLACE PCM.
			COMPLETE OBD II Drive Mode.
			RERUN OBD Test.

		No	SERVICE short circuit. REMOVE breakout box. RECONNECT all components. RESET PCM to completely clear DTCs. ☞ After Repair Procedure COMPLETE OBD II Drive Mode. RERUN OBD Test.

DTC	P0135	**Heated oxygen sensor heater (Front RH) (HTR 11) circuit malfunction**
	P0141	**Heated oxygen sensor heater (Middle) (HTR 12) circuit malfunction**
	P0147	**Heated oxygen sensor heater (Rear) (HTR 13) circuit malfunction**
	P0155	**Heated oxygen sensor heater (Front LH) (HTR 21) circuit malfunction**
DESCRIPTION		• DTC P0135, P0141, P0147 and P0155 indicate short to ground, or open, or short to power in heated oxygen sensor heater circuit

[Possible Cause]
- Shorts to B+ in harness or heated oxygen sensor
- Water in connectors
- Cut or pulled wires
- Disconnected wiring
- Open heated oxygen sensor heater power circuit
- Open GND circuit
- Low battery positive voltage
- Corrosion or poor mating terminals
- Damaged heated oxygen sensor heater
- Damaged ECM/PCM

STEP	INSPECTION		ACTION
1	HEATED OXYGEN SENSOR HEATER SIGNAL CIRCUIT IS OPEN, SHORTED TO GROUND, SHORTED TO B+ OR EXCESSIVE CURRENT DRAW Heated oxygen sensor reference list DTC P0135=Heated oxygen sensor heater (Front RH) DTC P0141=Heated oxygen sensor heater (Middle) DTC P0147=Heated oxygen sensor heater (Rear) DTC P0155=Heated oxygen sensor heater (Front LH) • Visually inspect heated oxygen sensor circuit for exposed wiring, contamination, corrosion and proper component. **Note** • On some applications, vehicle hoist may be required to access heated oxygen sensor harness. • **Were any concerns found during visual inspection?**	Yes	SERVICE any concerns found in visual inspection. RESET PCM to completely clear DTCs. ☞ After Repair Procedure COMPLETE OBD II Drive Mode. RERUN OBD Test.
		No	Go to next step.
2	PERFORM KEY ON ENGINE OFF (KOEO) SELF TEST • Key off. • NGS tester connected. • Key on, engine on. • Engine at 2,000 rpm for 1 minute. • Key off. • Key on, engine off. • Perform key on, KOEO Self-Test. • **Are DTCs P0135, P0141, P0147 and/or P0155 present?**	Yes	Go to next step.
		No	Fault may be intermittent. Intermittent poor connection or component malfunction (SERVICE or REPLACE as necessary). Go to ENGINE SYMPTOM TROUBLESHOOTING No.27

STEP	INSPECTION		ACTION
3	CHECK FOR POWER AT VEHICLE HEATED OXYGEN SENSOR HARNESS CONNECTOR • Key off. • Disconnect appropriate heated oxygen sensor(s). • Inspect both ends of connector(s) for damaged or pushed out pins, moisture, corrosion, contamination, etc. Repair as necessary. • Key on, engine off. • Measure voltage between power circuit and ground circuit at heated oxygen sensor vehicle harness connector. • **Is voltage greater than 10.5 volts?**	Yes	Go to step 5.
		No	Go to next step.
4	CHECK FOR OPEN HEATED OXYGEN SENSOR POWER CIRCUIT • Key off. • Disconnect PCM. Inspect both ends of connector for bent or pushed out pins, corrosion or other damage. Repair as necessary. • Install breakout box. Leave PCM disconnected. • Disconnect suspected sensor. • Measure resistance between Test Pin 71 or 97 at breakout box and power circuit at heated oxygen sensor vehicle harness connector. • **Is resistance between 4.0 ohms?**	Yes	Go to next step.
		No	CHECK fuse. SERVICE open circuit if necessary. REMOVE breakout box. RECONNECT all components. RESET PCM to completely clear DTCs. ☞ After Repair Procedure COMPLETE OBD II Drive Mode. RERUN OBD Test.
5	CHECK HEATED OXYGEN SENSOR HEATER RESISTANCE • Key off. • Heated oxygen sensor disconnected. • Connect circuit tester to heated oxygen sensor ground circuit and power terminals at heated oxygen sensor connector, and measure resistance of heated oxygen sensor heater. • **Is resistance between 3 and 30 ohms?**	Yes	Go to next step.
		No	REPLACE heated oxygen sensor. REMOVE breakout box. RECONNECT all components. RESET PCM to completely clear DTCs. ☞ After Repair Procedure COMPLETE OBD II Drive Mode. RERUN OBD Test.
6	CHECK FOR HEATER GND AND POWER CIRCUIT SHORTED TO HEATED OXYGEN SENSOR CASE • Suspect sensor disconnected. • Measure resistance between heated oxygen sensor heater ground at heated oxygen sensor connector and heated oxygen sensor case. • Measure resistance between heated oxygen sensor heater ground or ground terminal at heated oxygen sensor. • Measure resistance between heated oxygen sensor power circuit at heated oxygen sensor sensor connector and heated oxygen sensor case. • **Is resistance greater than 10,000 ohms?**	Yes	Go to next step.
		No	REPLACE heated oxygen sensor. REMOVE breakout box. RECONNECT all components. RESET PCM to completely clear DTCs. ☞ After Repair Procedure COMPLETE OBD II Drive Mode. RERUN OBD Test.

STEP	INSPECTION		ACTION

7	CHECK FOR SHORTS TO OTHER GROUNDS AND POWER IN HEATED OXYGEN SENOSR HEATER GROUND HARNESS CIRCUITS
	• Key off.
	• Disconnect NGS tester from DLC.
	• Disconnect suspected sensor.
	• Disconnect PCM.
	• Install breakout box. Leave PCM disconnected.
	• Use following list to measure resistance between appropriate test pins at breakout box.
	  • DTC P0135=HO2S heater (Front RH) (heater GND) Test Pin 93 and Test Pins 24, 103, 91 and 97.
	  • DTC P0141=HO2S heater (Middle) (heater GND) Test Pin 95 and Test Pins 24, 103, 91 and 97.
	  • DTC P0147=HO2S heater (Rear) (heater GND) Test Pin 96 and Test Pins 24, 103, 91 and 97.
	  • DTC P0155=HO2S heater (Front LH) (heater GND) Test Pin 94 and Test Pins 24, 103, 91 and 97.
	• **Is resistance greater than 10,000 ohms?**
		Yes	Go to next step.

		No	SERVICE shorted circuit. REMOVE breakout box. RECONNECT all components. RESET PCM to completely clear DTCs. ☞ After Repair Procedure COMPLETE OBD II Drive Mode. RERUN OBD Test.

8	CHECK FOR OPEN HEATED OXYGEN SENSOR HEATER GROUND HARNESS CIRCUIT
	• Key off.
	• Disconnect suspected sensor.
	• Install breakout box, PCM disconnected.
	• Use following list to measure resistance between appropriate test pins at breakout box and heated oxygen sensor heater ground at vehicle harness connector.
	  • HO2S heater (Front RH)=Test Pin 93 (heater GND)
	  • HO2S heater (Middle)=Test Pin 95 (heater GND)
	  • HO2S heater (Front LH)=Test Pin 94 (heater GND)
	  • HO2S heater (Rear)=Test Pin 96 (heater GND)
	• **Is resistance less than 4.0 ohms?**
		Yes	Open or shorted or excessive resistance in heater circuit in PCM.
			REPLACE PCM.
			REMOVE breakout box.
			RECONNECT all components.
			COMPLETE OBD II Drive Mode.
			RERUN OBD Test.

		No	SERVICE open or excessive resistance in heater circuit in harness. REMOVE breakout box. RECONNECT all components. RESET PCM to completely clear DTCs. ☞ After Repair Procedure COMPLETE OBD II Drive Mode. RERUN OBD Test.

DTC	P0136 P1137 P1138	**Heated oxygen sensor (Middle) (HO2S 12) circuit malfunction** **Lack of heated oxygen sensor (Middle) (HO2S 12) switch sensor indicates lean** **Lack of heated oxygen sensor (Middle) (HO2S 12) switch sensor indicates rich**
DESCRIPTION		• DTC P0136 indicate output voltage of middle heated oxygen sensor is less than some calibratable functional window. • DTC P1137 and P1138 can only be retrieved during key on engine running (KOER) self-test when fuel control is ramped rich and lean and monitored for voltage change on rear heated oxygen sensor.

[Possible Cause]

- Wiring Concerns
  - Pinched, shorted, and corroded wiring and pins
  - Crossed sensor wires
- Other Concerns
  - Exhaust leaks
  - Contaminated or damaged sensor

STEP	INSPECTION		ACTION
1	DTCS P0136 MONITOR MIDDLE HEATED OXYGEN SENSOR OUTPUT VOLTAGE FOR ACTIVITY. • **Are any of above concerns present?**	Yes	SERVICE as necessary. RESET PCM to completely clear DTCs. ☞ After Repair Procedure COMPLETE OBD II Drive Mode. RERUN OBD Test.
		No	**Continuous Memory DTCs P0136:** Go to next step. **All others:** Go to step 3.
2	CHECK FOR KOER DTCS P1137 AND P1138 • Key off. • NGS tester connected. • Key on. • Engine at 2,000 rpm for 3 minutes. • Active KOER Self-Test. • Check for DTCs. • **Are DTCs P1137 or P1138 present?**	Yes	Go to next step.
		No	Fault may be intermittent. Intermittent poor connection or component malfunction (SERVICE or REPLACE as necessary). Go to ENGINE SYMPTOM TROUBLESHOOTING No. 27.

3	CHECK EXHAUST SYSTEM FOR LEAKS
	
	Note
	• Any exhaust leaks between engine and end of warm up three way catalytic converter may cause DTCs P0136.
	
	• Key off.
	• Raise vehicle.
	• Inspect following:
	  • Exhaust flanges for leaks
	  • Heated oxygen sensor tightening torque
	  • Check for punctures and cracks in three way catalytic converter and pipes leading to them
	• **Are there any exhaust leaks?**
		Yes	REPLACE or SERVICE as required.
			RESET PCM to completely clear DTCs.
			☞ After Repair Procedure
			COMPLETE OBD II Drive Mode.
			RERUN OBD Test.

		No	Go to next step.

STEP	INSPECTION		ACTION

4	CHECK HEATED OXYGEN SENSOR HARNESS CIRCUIT FOR SHORT TO POWER AND GROUND AND PCM GROUND (BETWEEN PCM AND HO2S GROUND CIRCUIT)
	• Key off.
	• Disconnect NGS tester from data link connector.
	• Disconnect PCM. Inspect both ends of connector for damaged or pushed out pins, moisture, corrosion and loose pins. Service as necessary.
	• Breakout box installed. Leave PCM disconnected.
	• Disconnect suspected heated oxygen sensor.
	• Measure resistance between heated oxygen sensor signal Test Pin and PCM ground Test Pin at breakout box.
	• Measure resistance between heated oxygen sensor signal Test Pin and power and constant voltage Test Pin at breakout box.
	• Measure resistance between heated oxygen sensor signal Test Pin and ground Test Pin at breakout box.
	  • Heated oxygen sensor (Middle)=Test Pin 35
	  • PCM ground=Test Pin 91
	  • Ground=Test Pins 24 and 103
	  • Power=Test Pin 71 and 97
	  • Constant voltage=Test Pin 90
	• **Is resistance greater than 10,000 ohms?**
		Yes	Go to next step.

		No	SERVICE short circuit in harness. REMOVE breakout box. RECONNECT all components. RESET PCM to completely clear DTCs. ☞ After Repair Procedure COMPLETE OBD II Drive Mode. RERUN OBD Test.

5	CHECK RESISTANCE OF HEATED OXYGEN SENSOR AND HEATED OXYGEN SENSOR GROUND CIRCUIT
	• Key off.
	• Breakout box installed, PCM disconnected.
	• Disconnect suspected heated oxygen sensor.
	• Measure resistance between heated oxygen sensor signal Test Pin at breakout box and heated oxygen sensor vehicle harness connector. Record readings.
	• Measure resistance between PCM ground Test Pin at breakout box and heated oxygen sensor PCM ground vehicle harness connector. Record readings.
	  • Heated oxygen sensor (Middle)=Test Pin 35
	  • PCM ground=Test Pin 91
	• **Is resistance reading less than 5.0 ohms?**
		Yes	Go to next step.

		No	SERVICE open circuit in harness. REMOVE breakout box. RECONNECT all components. RESET PCM to completely clear DTCs. ☞ After Repair Procedure COMPLETE OBD II Drive Mode. RERUN OBD Test.

STEP	INSPECTION		ACTION

6	CHECK HEATED OXYGEN SENSOR CIRCUIT RESISTANCE
	• Key off.
	• PCM connected to vehicle harness.
	• Disconnect suspected heated oxygen sensor connector.
	• NGS tester connected.
	• Key on, engine off.
	• Access correct heated oxygen sensor PID.
	  • O2S12
	
	Note
	• Heated oxygen sensor displayed as O2S12 (Middle) on NGS tester.
	
	  • Heated oxygen sensor (Middle)=Test Pin 35 and 97
	• **Is voltage greater than 1.5 volts?**
		Yes	Go to step 9.

		No	Go to next step.
7	CHECK RESISTANCE OF HEATED OXYGEN SENSOR GROUND CIRCUIT IN PCM • Key off. • PCM connected to breakout box. vehicle harness disconnected from breakout box. • Measure the resistance between Test Pin 35 (Middle), 60 (Front RH), 61 (Rear), 87 (Front LH) and Test Pin 91 at breakout box. • **Is resistance reading less than 5.0 ohms?**	Yes	REMOVE breakout box. RECONNECT PCM. Go to next step.
		No	REPLACE PCM. REMOVE breakout box. RECONNECT all components. ☞ After Repair Procedure COMPLETE OBD II Drive Mode. RERUN OBD Test.
8	APPLY 12 VOLTS TO SUSPECT HEATED OXYGEN SENSOR CIRCUIT • Key off. • Heated oxygen sensor (middle) disconnected. • Jumper power to heated oxygen sensor signal circuit at vehicle harness connector. • Key on. • Access heated oxygen sensor PID and Monitor. • O2S12 PID • **Is PID voltage greater than 1.5 volts?**	Yes	REPLACE heated oxygen sensor. RECONNECT all components. RESET PCM to completely clear DTCs. ☞ After Repair Procedure COMPLETE OBD II Drive Mode. RERUN OBD Test.
		No	REPLACE PCM. RECONNECT all components. RESET PCM to completely clear DTCs. ☞ After Repair Procedure COMPLETE OBD II Drive Mode. RERUN OBD Test.
9	CHECK FOR OVER VOLTAGE ON HEATED OXYGEN SENSOR CIRCUIT IN PCM • Key on. • PCM connected to vehicle harness. • Heated oxygen sensor disconnected. • Inspect both ends of connect for damaged or pushed out pins, moisture, corrosion, loose pins, etc. and service as necessary. • Measure voltage between PCM ground Test Pin at heated oxygen sensor vehicle harness connector and battery negative post. • Measure voltage between heated oxygen sensor signal Test Pin at heated oxygen sensor vehicle harness connector and battery negative post. • **Are voltage readings greater than 1.5 volts?**	Yes	REPLACE PCM. RECONNECT all components. COMPLETE OBD II Drive Mode. RERUN OBD Test.
		No	REPLACE heated oxygen sensor. RECONNECT all components. RESET PCM to completely clear DTCs. ☞ After Repair Procedure COMPLETE OBD II Drive Mode. RERUN OBD Test.

DTC	P0142 P1143 P1144	**Heated oxygen sensor (Rear) (HO2S 13) circuit malfunction** **Lack of heated oxygen sensor (Rear) (HO2S 13) switch sensor indicates lean** **Lack of heated oxygen sensor (Rear) (HO2S 13) switch sensor indicates rich**
DESCRIPTION		• DTC P0142 indicate the output voltage of the downstream heated oxygen sensor is less than some calibratable functional window. • DTC P1143 and P1144 can only retrieved during key on engine running (KOER) Self-Test when the fuel control is ramped rich and lean and monitored for a voltage change on the rear heated oxygen sensor.

[Possible Cause]
- Wiring Concerns
  - Pinched, shorted, and corroded wiring and pins
  - Crossed sensor wires
- Other Concerns
  - Exhaust leaks
  - Contaminated or damaged sensor

STEP	INSPECTION		ACTION
1	DTCS P0142 MONITOR DOWNSTREAM HEATED OXYGEN SENSOR OUTPUT VOLTAGE FOR ACTIVITY. • **Are any of the above concerns present?**	Yes	SERVICE as necessary. RESET PCM to completely clear the DTCs. ☞ After Repair Procedure COMPLETE a OBD II Drive Mode. RERUN OBD Test.
		No	**Continuous Memory DTCs P0156:** Go to next step. **All others:** Go to step 3.
2	CHECK FOR KOER DTCS P1143 AND P1144 • Key off. • NGS tester connected. • Key on. • Engine at 2,000 rpm for 3 minutes. • Activate KOER Self-Test. • Check for DTCs. • **Are DTCs P1143 or P1144 present?**	Yes	Go to nest step.
		No	Fault may be intermittent. Intermittent poor connection or component malfunction (SERVICE or REPLACE as necessary). Go to ENGINE SYMPTOM TROUBLESHOOTING No.27.

3	CHECK EXHAUST SYSTEM FOR LEAKS
	Note
	• Any exhaust leaks between the engine and the end of three way catalytic converter may cause DTCs P0142.
	• Key off.
	• Raise vehicle.
	• Inspect the following:
	  • Exhaust flanges for leaks
	  • Heated oxygen sensor tightening torque
	  • Check for punctures and cracks in catalyst and pipes leading to them.
	• **Are there any exhaust leaks?**
		Yes	REPLACE or SERVICE as required.
			RESET PCM to completely clear the DTCs.
			☞ After Repair Procedure
			COMPLETE a OBD II Drive Mode.
			RERUN OBD Test.

		No	Go to next step.

STEP	INSPECTION		ACTION

4	CHECK HEATED OXYGEN SENSOR HARNESS CIRCUIT FOR SHORT TO POWER AND GROUND OR PCM GROUND (BETWEEN PCM AND HO2S GROUND CIRCUIT)
	• Key off.
	• Disconnect NGS tester from DLC.
	• Disconnect PCM. Inspect both ends of connector for damaged or pushed out pins, moisture, corrosion and loose pins. Service as necessary.
	• Breakout box installed. Leave PCM disconnected.
	• Disconnect suspected heated oxygen sensor.
	• Measure the resistance between heated oxygen sensor signal Test Pin and PCM ground Test Pin at breakout box.
	• Measure the resistance between heated oxygen sensor signal Test Pin and power and constant voltage Test Pin at breakout box.
	• Measure the resistance between heated oxygen sensor signal Test Pin and ground Test Pin at breakout box.
	  • Heated oxygen sensor (Rear)= Test Pin 61
	  • PCM ground=Test Pin 91
	  • Ground=Test Pins 24 and 103
	  • Power=Test Pin 71 and 97
	  • Constant voltage=Test Pin 90
	• **Is resistance greater than 10,000 ohms?**
		Yes	Go to next step.

		No	SERVICE short circuit in harness. REMOVE breakout box. RECONNECT all components. RESET PCM to completely clear DTCs. ☞ After Repair Procedure COMPLETE OBD II Drive Mode. RERUN OBD Test.

5	CHECK RESISTANCE OF HEATED OXYGEN SENSOR AND HEATED OXYGEN SENSOR GROUND CIRCUIT
	• Key off.
	• Breakout box installed, PCM disconnected.
	• Disconnect suspected heated oxygen sensor.
	• Measure the resistance between heated oxygen sensor signal Test Pin at breakout box and heated oxygen sensor vehicle harness connector. Record readings.
	• Measure resistance between PCM ground Test Pin at breakout box and heated oxygen sensor PCM ground circuit at vehicle harness connector. Record readings.
	  • Heated oxygen sensor (Rear)=Test Pin 61
	  • PCM ground=Test Pin 91
	• **Is resistance reading less than 5.0 ohms?**
		Yes	Go to next step.

		No	SERVICE open circuit in harness. REMOVE breakout box. RECONNECT all components. RESET PCM to completely clear DTCs. ☞ After Repair Procedure COMPLETE OBD II Drive Mode. RERUN OBD Test.

STEP	INSPECTION		ACTION
6	CHECK HEATED OXYGEN SENSOR CIRCUIT RESISTANCE • Key off. • PCM connected to vehicle harness. • Connect suspected heated oxygen sensor connector. • NGS tester connected. • Key on, engine off. • Access correct heated oxygen sensor PID. • O2S13 (Rear) **Note** • Heated oxygen sensor displayed as O2S13 (Rear) on NGS tester. DTC: P0142, P1143 and P1144 (HO2S (Rear)) Test Pins: 61 and 97 • **Is voltage greater than 1.5 volts?**	Yes	Go to step 9.
		No	Go to next step.
7	CHECK RESISTANCE OF HEATED OXYGEN SENSOR GROUND CIRCUIT IN THE PCM • Key off. • PCM connected to breakout box. Vehicle harness disconnected from breakout box. • Measure resistance between Test Pin 91 and Test Pin 24 and 103 at breakout box. • **Is resistance reading less than 5.0 ohms?**	Yes	REMOVE breakout box. RECONNECT PCM. Go to next step.
		No	REPLACE PCM. REMOVE breakout box. RECONNECT all components. RESET PCM to completely clear DTCs. ☞ After Repair Procedure COMPLETE OBD II Drive Mode. RERUN OBD Test.
8	APPLY 12 VOLTS TO SUSPECT HEATED OXYGEN SENSOR CIRCUIT • Key off. • Heated oxygen sensor (Rear) disconnected. • Jumper power to heated oxygen sensor signal circuit at the vehicle harness connector. • Key on. • Access heated oxygen sensor PID and monitor. • O2S13 PID • **Is PID voltage greater than 1.5 volts?**	Yes	REPLACE heated oxygen sensor. RECONNECT all components. RESET PCM to completely clear DTCs. ☞ After Repair Procedure COMPLETE OBD II Drive Mode. RERUN OBD Test.
		No	RECONNECT all components. Go to next step.
9	CHECK FOR OVER VOLTAGE ON THE HEATED OXYGEN SENSOR CIRCUIT IN THE PCM • Key on. • PCM connected to vehicle harness. • Heated oxygen sensor disconnected. • Inspect both ends of connect for damaged or pushed out pins, moisture, corrosion, loose pins, etc. and service as necessary. • Measure the voltage between Test Pin 91 at the heated oxygen sensor vehicle harness connector and battery negative post. • Measure the voltage between heated oxygen sensor signal Test Pin at the heated oxygen sensor vehicle harness connector and battery negative post. • **Are voltage readings greater than 1.5 volts?**	Yes	REPLACE PCM. RECONNECT all components. COMPLETE OBD II Drive Mode. RERUN OBD Test.
		No	REPLACE heated oxygen sensor. RECONNECT all components. RESET PCM to completely clear DTCs. ☞ After Repair Procedure COMPLETE OBD II Drive Mode. RERUN OBD Test.

DTC	**P0171**	**Adaptive fuel control system (RH) too lean**
	P0172	**Adaptive fuel control system (RH) too rich**
	P0174	**Adaptive fuel control system (LH) too lean**
	P0175	**Adaptive fuel control system (LH) too rich**
	P1130	**Lack of heated oxygen sensor (Front RH) (HO2S 11) switch adaptive fuel at limit**
	P1131	**Lack of heated oxygen sensor (Front RH) (HO2S 11) switch sensor indicates too lean**
	P1132	**Lack of heated oxygen sensor (Front RH) (HO2S 11) switch sensor indicates too rich**
	P1150	**Lack of heated oxygen sensor (Front LH) (HO2S 21) switch adaptive fuel at limit**
	P1151	**Lack of heated oxygen sensor (Front LH) (HO2S 21) switch sensor indicates too lean**
	P1152	**Lack of heated oxygen sensor (Front LH) (HO2S 21) switch sensor indicates too rich**
DESCRIPTION		• DTC P0171 right bank and DTC P0174 left bank indicate fuel/air ratio is too lean. Fuel trim system is at rich correction limit. • DTC P0172 right bank and DTC P0175 left bank indicate fuel/air ratio is too rich. Fuel trim system is at lean correction limit. • DTCs P1130 right bank and P1150 left bank indicate fuel control system has reached maximum compensation for lean or rich condition and heated oxygen sensor is not switching. • DTC P1131 right bank and P1151 left bank indicate fuel/air ratio is correcting rich for an overly lean condition. Heated oxygen sensor voltage is less than 0.45 volt. • DTC P1132 right bank and P1152 left bank indicate fuel/air ratio is correcting lean for an overly lean condition. Heated oxygen sensor voltage is greater than 0.45 volt.

[Possible Cause]

Fuel System
- Excessive fuel pressure
- Leaking fuel injector(s)
- Leaking pressure regulator
- Low fuel pressure or running out of fuel
- Contaminated fuel injector(s)

Base Engine
- Oil overfill
- Cam timing
- Cylinder compression
- Exhaust leaks before or near heated oxygen sensor's

Induction System
- Air leaks after MAF sensor
- Vacuum leaks
- Restricted air inlet
- Positive crankcase ventilation (PCV) system
- Fuel purge system
- Improperly seated engine oil dipstick

EGR System
- Leaking gasket
- Stuck open EGR valve
- Leaking diaphragm

Warning

Following troubleshooting flow chart contains fuel system diagnosis and repair procedures. Read following warnings before performing fuel system service:
- **Fuel vapor is hazardous. It can easily ignite, causing serious injury and damage. Always keep sparks and flames away from fuel.**
- **Fuel line spills and leaks are dangerous. Fuel can ignite and cause serious injuries or death and damage. Fuel can also irritate skin and eyes. To prevent this, always complete "BEFORE REPAIR PROCEDURE" and "AFTER REPAIR PROCEDURE" described in this manual.**
  ☞ 01–14 BEFORE REPAIR PROCEDURE
  ☞ 01–14 AFTER REPAIR PROCEDURE

STEP	INSPECTION		ACTION
1	VISUAL CHECKS • Check intake air system for leaks, obstructions and damage. • Check air cleaner element and air cleaner housing for blockage. • Verify integrity of PCV system. • Check for vacuum leaks. • **Are any of above concerns present?**	Yes	SERVICE as necessary. RESET PCM to completely clear DTCs. ☞ After Repair Procedure COMPLETE OBD II Drive Mode. RERUN OBD Test.
		No	Go to next step.

STEP	INSPECTION		ACTION
2	PERFORM KEY ON ENGINE RUNNING (KOER) SELF-TEST • Key off. • NGS tester connected. • Disconnect fuel vapor hose from intake manifold and plug fitting at intake manifold. • Start engine and run at 2000 rpm for 5 minutes and return to idle. • Perform KOER Self-Test. • **Are any heated oxygen sensor DTCs P1127, P1131, P1132, P1151 or P1152 present?**	Yes	**If DTC P1127 is present:** Go to DTC(s) charts PROCEED as required. **DTCs P1131, P1130 or P1151, P1150:** Go to next step. **DTCs P1132, P1130 or P1152, P1150:** Go to step 9.
		No	**For Continuous DTCs Only P1130, P1150, P0171, P0174, P0172 and P0175:** Go to step 12. If DTC(s) P1132 and/or P1152 are no longer present: RECONNECT fuel vapor line. Go to address evaporative emission purge solenoid valve DTC (P0443). **All others:** Fault that produced DTC is an intermittent. Check for poor connection or component malfunction (SERVICE or REPLACE as necessary). Go to ENGINE SYMPTOM TROUBLESHOOTING No. 27.

3	HEATED OXYGEN SENSOR CIRCUIT TEST (WITH LEAN DTCS)
	• Key off.
	• NGS tester connected.
	• Disconnect suspected heated oxygen sensor. Inspect for damaged or pushed out pins, water, corrosion, loose wires. Service as necessary.
	• Key on, engine off.
	• Access correct heated oxygen sensor PID.
	  ◦ O2S11
	  ◦ O2S21
	
	Note
	• If spark occurs, remove jumper and go to step 7 (check fuse in heater circuit)
	
	• Jumper heated oxygen sensor signal circuit to heated oxygen sensor Heater power circuit at heated oxygen sensor vehicle harness connector.
	• **Is reading 1.30 volts or greater?**
		Yes	CHECK heated oxygen sensor ground circuit.
			Go to next step.

		No	An open or short to ground exists in vehicle harness or PCM. Go to step 6.
4	CHECK SIGNAL RETURN CIRCUIT FOR SHORTS AND OPENS • Key off. • Install breakout box. PCM connected. • Measure resistance between heated oxygen sensor ground terminal at heated oxygen sensor vehicle harness connector and ground test pin at breakout box. • **Is resistance reading less than 5.0 ohms?**	Yes	REMOVE breakout box. Go to step 12.
		No	Go to next step.
5	CHECK HEATED OXYGEN SENOSR SIGNAL RETURN CIRCUIT IN VEHICLE HARNESS • Breakout box installed. PCM disconnected. • Measure resistance between heated oxygen sensor ground terminal at heated oxygen sensor vehicle harness connector and ground test pin 91 at breakout box. • **Is resistance reading less than 5.0 ohms?**	Yes	REMOVE breakout box. REPLACE PCM. COMPLETE OBD II Drive Mode. RERUN OBD Test.
		No	SERVICE open circuit. REMOVE breakout box. RESET PCM to completely clear DTCs. ☞ After Repair Procedure COMPLETE OBD II Drive Mode. RERUN OBD Test.

STEP	INSPECTION		ACTION

6	CHECK RESISTANCE OF HEATED OXYGEN SENSOR AND HEATED OXYGEN SENSOR GROUND CIRCUIT
	• Key off.
	• Disconnect PCM. Inspect both ends of connector for bent or pushed out pins, corrosion or other damage. Service as necessary.
	• Install breakout box. Leave PCM disconnected.
	• Disconnected suspected heated oxygen sensor from harness. Inspect both ends of connector for damaged or pushed out pins, moisture, corrosion, loose pins. Service as required.
	• Measure resistance between suspected heated oxygen sensor signal Test Pin at breakout box and heated oxygen sensor vehicle harness connector. Use pin assignment below and record reading:
	  • HO2S (Front RH)=Test Pin 60
	  • HO2S (Front LH)=Test Pin 87
	  • HO2S ground=Test Pin 91
	• **Is resistance reading less than 5.0 ohms?**
		Yes	Go to next step.

		No	SERVICE open circuit. REMOVE breakout box. RECONNECT PCM and heated oxygen sensor. RESET PCM to completely clear DTCs. ☞ After Repair Procedure COMPLETE OBD II Drive Mode. RERUN OBD Test.
7	CHECK HEATED OXYGEN SENSOR CIRCUIT WIRING HARNESS FOR SHORT TO GROUND • Key off. • Breakout box installed. PCM disconnected. • Heated oxygen sensor disconnected. • Measure resistance between suspected heated oxygen sensor signal Test Pin and Test Pins 23, 24, 51, 76, 77, 103 and 91 at breakout box. • **Is each resistance greater than 10,000 ohms?**	Yes	Go to next step.
		No	SERVICE short circuit. REMOVE breakout box. RECONNECT PCM and heated oxygen sensor. RESET PCM to completely clear DTCs. ☞ After Repair Procedure COMPLETE OBD II Drive Mode. RERUN OBD Test.

8	CHECK HEATED OXYGEN SENSOR FOR SHORT TO GROUND OR PCM GROUND (BETWEEN PCM AND HO2S GROUND CIRCUIT)
	• Key off.
	• Breakout box installed. PCM disconnected.
	• Reconnect heated oxygen sensor.
	• Measure resistance between ground circuit and PCM ground Test Pins and heated oxygen sensor signal Test Pin at breakout box:
	  • HO2S (Front RH) signal=Test Pin 60
	  • HO2S (Front LH) signal=Test Pin 87
	  • Ground=Test Pin 24 and 103
	  • PCM ground=Test Pin 91
	• **Is resistance greater than 10,000 ohms?**
		Yes	REMOVE breakout box.
			RECONNECT heated oxygen sensor.
			REPLACE PCM.
			COMPLETE OBD II Drive Mode.
			RERUN OBD Test.

		No	REPLACE heated oxygen sensor. REMOVE breakout box. RECONNECT PCM. RESET PCM to completely clear DTCs. ☞ After Repair Procedure COMPLETE OBD II Drive Mode. RERUN OBD Test.

9	HEATED OXYGEN SENSOR CIRCUIT CHECK (FOR RICH DTCS)
	• Key off.
	• Disconnect suspected heated oxygen sensor. Inspect for damaged or pushed out pins, corrosion and loose wires. Service as necessary.
	• NGS tester connected.
	• Access suspected heated oxygen sensor PID(s).
	  • O2S11 PID
	  • O2S21 PID
	• **Is reading 0.2 volt or less?**
		Yes	Go to step 11.

		No	Short to power exists. Go to next step.

STEP	INSPECTION		ACTION

10	CHECK FOR SHORTS TO VOLTAGE SOURCE IN HARNESS CIRCUIT
	• Key off.
	• Disconnect NGS tester from DLC.
	• Suspect sensor disconnected.
	• Disconnect PCM. Inspect for damaged or pushed out pins, corrosion and loose wires. Service as necessary.
	• Install breakout box. Leave PCM disconnected.
	• Use following list to measure resistance between appropriate test pins at breakout box:
	  • DTC P1130, P1132=HO2S (Front RH) Test Pin 60 and Test Pins 71, 93 and 97.
	  • DTC P1150, P1152=HO2S (Front LH) Test Pin 87 and Test Pins 71, 94 and 97.
	• **Is resistance greater than 10,000 ohms?**
		Yes	REMOVE breakout box.
			REPLACE PCM.
			COMPLETE OBD II Drive Mode.
			RERUN OBD Test.

		No	REPLACE heated oxygen sensor. SERVICE short to power. REMOVE breakout box. RECONNECT all components. RESET PCM to completely clear DTCs. ☞ After Repair Procedure COMPLETE OBD II Drive Mode. RERUN OBD Test.
11	CHECK FOR HEATED OXYGEN SENSOR SIGNAL SHORTED TO HEATED OXYGEN SENSOR HEATER CIRCUIT IN SENSOR • Key off. • Connect suspected heated oxygen sensor. • NGS tester connected. • Key on, engine off. **Note** • heated oxygen sensor displayed as O2S11 (Front RH) or O2S21 (Front LH) on NGS tester. • Access suspected heated oxygen sensor PID corresponding to DTCs received. • **Is heated oxygen sensor voltage greater than 0.45 volt?**	Yes	REPLACE heated oxygen sensor. RECONNECT all components. RESET PCM to completely clear DTCs. ☞ After Repair Procedure COMPLETE OBD II Drive Mode. RERUN OBD Test.
		No	RECONNECT all components. Go to next step.
12	CHECK FUEL PRESSURE • Key off. • Install fuel pressure gauge. • Verify vacuum source to fuel pressure regulator. • **If engine will start:** • Start engine and idle. Record fuel pressure. • Increase engine speed to 2,500 rpm and maintain for one minute. Record fuel pressure. • **No start:** • Cycle key on and off several times. Record fuel pressure. • **Is fuel pressure between 207—301 kPa {2.1—2.9 kgf/cm^2, 30—45 psi} for all others?**	Yes	Fuel system is capable of required fuel pressure. Go to step 22.
		No	Fuel pressure out of specification. Go to next step.

STEP	INSPECTION		ACTION
13	CHECK PRESSURE REGULATOR CONTROL (PRC) SOLENOID VALVE POWER CIRCUIT Symptom Charts have indicated lack of power during acceleration and/or cruise drive modes. Possible causes: • Damaged PRC solenoid valve. • Damaged input port or output port vacuum lines. • Damaged PRC solenoid valve harness circuits. • Damaged PCM. • Key off. • PRC solenoid valve disconnected. • Key on, engine off. • Measure voltage between power circuit at PRC solenoid valve vehicle harness connector and battery ground. • **Is voltage greater than 10.5 volts?**	Yes	PRC solenoid valve power circuit is complete. Go to next step.
		No	PRC solenoid valve power circuit is not complete. SERVICE open in power harness circuit. RECONNECT PRC solenoid valve. RESET PCM to completely clear DTCs. ☞ After Repair Procedure COMPLETE OBD II Drive Mode. RERUN OBD Test.
14	CHECK PRC SOLENOID VALVE HARNESS CIRCUIT RESISTANCE • Key off. • PRC solenoid valve disconnected. • Disconnect PCM. Inspect for damaged or pushed out pins, corrosion and loose wires. Service as necessary. • Install breakout box. Leave PCM disconnected. • Measure resistance between Test Pin 19 at breakout box and PRC solenoid valve circuit at solenoid vehicle harness connector. • **Is resistance less than 5.0 ohms?**	Yes	PRC solenoid valve circuit is complete. Go to next step.
		No	PRC solenoid valve circuit lacks continuity. SERVICE open circuit. REMOVE breakout box. RECONNECT all components. RESET PCM to completely clear DTCs. ☞ After Repair Procedure COMPLETE OBD II Drive Mode. RERUN OBD Test.
15	CHECK PRC SOLENOID VALVE CIRCUIT FOR SHORTS TO POWER AND GROUND • Key off. • PRC solenoid valve disconnected. • Breakout box installed, PCM disconnected. • Disconnect NGS tester from DLC. • Measure resistance between Test Pin 19 and Test Pins 71 and 97 at breakout box. • Measure resistance between Test Pin 19 and Test Pins 24, 77 and 91 at breakout box. • **Is resistance greater than 10,000 ohms?**	Yes	There are no power or ground short circuits to PRC solenoid valve. Go to next step.
		No	Power or ground short circuit exists in PRC solenoid valve harness circuit. SERVICE short circuit. REMOVE breakout box. RECONNECT all components. RESET PCM to completely clear DTCs. ☞ After Repair Procedure COMPLETE OBD II Drive Mode. RERUN OBD Test.
16	CHECK VACUUM LINE: MANIFOLD VACUUM SOURCE TO PRC SOLENOID VALVE INPUT PORT • Key off. • Disconnect and inspect vacuum line between manifold vacuum source and PRC solenoid valve input vacuum port for blockage, kinks or cracks. • **Is vacuum line free of damage?**	Yes	Vacuum line is okay. RECONNECT vacuum line to manifold vacuum, leave other end of line. Go to next step.
		No	Vacuum line is damaged. SERVICE or REPLACE damaged vacuum line. RESET PCM to completely clear DTCs. ☞ After Repair Procedure COMPLETE OBD II Drive Mode. RERUN OBD Test.
17	CHECK VACUUM SIGNAL: MANIFOLD VACUUM SOURCE TO PRC SOLENOID VALVE INPUT • Key off. • Connect vacuum gauge at unattached end of vacuum line. • Start engine while observing vacuum gauge display. • Key off. • **Was vacuum signal present?**	Yes	PRC solenoid valve normally receives manifold vacuum signal. REMOVE vacuum gauge. RECONNECT all components. Go to next step.
		No	REMOVE vacuum gauge. RECONNECT all components. Go to step 38.

STEP	INSPECTION		ACTION
18	CHECK VACUUM LINE: FUEL PRESSURE REGULATOR TO PRC SOLENOID VALVE OUTPUT PORT • Key off. • Disconnect and inspect vacuum line between fuel pressure regulator and PRC solenoid valve output vacuum port for blockage, kinks or cracks. • **Is vacuum line free of damage?**	Yes	Vacuum line is okay. RECONNECT vacuum line. Go to next step.
		No	Vacuum line is damaged. SERVICE or REPLACE damaged vacuum line. RESET PCM to completely clear DTCs. ☞ After Repair Procedure COMPLETE OBD II Drive Mode. RERUN OBD Test.
19	CHECK FOR PRC SOLENOID VALVE – VALVE STUCK CLOSED • Key off. • Breakout box installed, PCM connected. • Disconnect vacuum line from PRC solenoid valve to fuel pressure regulator at fuel pressure regulator. Install vacuum gauge at unattached end of vacuum line. • Disconnect vacuum line from intake manifold vacuum to PRC solenoid valve at manifold vacuum source. **Note** • PRC solenoid valve contains normally open valve. If solenoid is not energized while vacuum is applied at input port, vacuum signal will normally be allowed to pass. • Install vacuum pump at input port of PRC solenoid valve and apply –27— –33 kPa {–202— –247 mmHg, –8— –10 inHg} of vacuum to PRC solenoid valve while observing vacuum gauge. • **Is vacuum signal indicated by vacuum gauge?**	Yes	PRC solenoid valve is not stuck closed. Go to next step.
		No	PRC solenoid valve is stuck closed. REPLACE damaged PRC solenoid valve. REMOVE vacuum gauge and pump. RECONNECT all components. RESET PCM to completely clear DTCs. ☞ After Repair Procedure COMPLETE OBD II Drive Mode. RERUN OBD Test.
20	CHECK FOR PRC SOLENOID VALVE STUCK OPEN • Key off. • Breakout box installed. PCM connected. • Installed vacuum gauge at output port of PRC solenoid valve. • Vacuum pump installed at input port of PRC solenoid valve. • Apply –27— –33 kPa {–203— –247 mmHg, –8— –10 inHg} of vacuum to PRC solenoid valve input port. • Key on. • Momentarily jumper Test Pin 19 to Test Pin 103 at breakout box and observe vacuum gauge. **Note** • PRC solenoid valve contains normally open valve. If solenoid is energized while vacuum is applied at input port, vacuum signal will normally not be allowed to pass because solenoid valve will be closed. • Key off. • **Did vacuum gauge reading drop from –27— –33 kPa {–203— –247 mmHg, –8— –10 inHg} to 0— –3.3 kPa {0— –25 mmHg, 0— –1 inHg} when Pin 19 was jumpered to Pin 103?**	Yes	PRC solenoid valve is not stuck open. REMOVE vacuum gauge and pump. RECONNECT all components. Go to next step.
		No	PRC solenoid valve is stuck open. REPLACE damaged PRC solenoid valve. REMOVE vacuum gauge and pump. RECONNECT all components. RESET PCM to completely clear DTCs. ☞ After Repair Procedure COMPLETE OBD II Drive Mode. RERUN OBD Test.

STEP	INSPECTION		ACTION

21	CHECK PCM CONTROL OF PRC SOLENOID VALVE
	• Key off.
	• Breakout box installed, PCM connected.
	• Install digital multimeter between Test Pin 19 and Test Pin 71 of breakout box.
	• Record digital multimeter readings under following conditions:
	  • Key on, engine off.
	  • Engine crank.
	  • Engine running (More than 10 seconds after start-up).
	
	Note
	• PRC solenoid valve should only be energized during engine crank for previous conditions.
	
	• **Is voltage reading between Pin 19 and Pin 71 10—12 V during engine crank and 0—2 V during other conditions?**
		Yes	PCM is properly controlling PRC solenoid valve.
			REMOVE breakout box.
			CHECK and REPLACE pressure regulator.

		No	PCM is not properly controlling PRC solenoid valve. REMOVE breakout box. REPLACE PCM. COMPLETE OBD II Drive Mode. RERUN OBD Test.
22	CHECK SYSTEM ABILITY TO HOLD FUEL PRESSURE • Install fuel pressure gauge installed. • Cycle key on and off several times. • Verify there are no external leaks (Service as necessary) • **Does fuel pressure remain within 34 kPa {0.35 kgf/cm^2, 5 psi} of highest reading after one minute?**	Yes	**For Continuous DTCs P1130, P1150, P0171, P0172, P0174 and P0175:** Go to step 31. **For No Starts:** Go to step 32. **For Fuel Control DTCs displayed with misfire DTCs:** Go to step 33. **All other DTCs:** Go to step 34.
		No	Excessive pressure loss. Go to next step.
23	CHECK FUEL PRESSURE LEAKDOWN • Observe all Warnings, Cautions and Notes. • Install fuel pressure tester. • Connect NGS tester. • Key on, engine off. • Access Output Test Mode and active fuel pump to obtain maximum fuel pressure. • Exit Output Test Mode. Key off. • Verify fuel pressure remains within 34 kPa {35 kgf/cm^2, 5 psi} of maximum pressure for 1 minute after turning pump off. • **Does fuel pressure remain within 34 kPa {0.35 kgf/cm^2, 5 psi}?**	Yes	Go to step 25.
		No	Go to next step.
24	CHECK PRESSURE REGULATOR DIAPHRAGM • Key off. • Install fuel pressure tester. • Start and run engine for 10 seconds. • Key off. Wait 10 seconds. • Start and run engine for 10 seconds. • Key off. Remove vacuum hose from fuel pressure regulator. • Inspect for fuel in vacuum hose or regulator port. • **Is vacuum hose and regulator port free of fuel?**	Yes	Go to step 28.
		No	REPLACE fuel pressure regulator. RESET PCM to completely clear DTCs. ☞ After Repair Procedure COMPLETE OBD II Drive Mode. RERUN OBD Test.

STEP	INSPECTION		ACTION
25	CHECK FUEL PRESSURE, ENGINE RUNNING • Key off. • Install fuel pressure tester. • Disconnect vacuum hose at fuel pressure regulator and plug it. • Drive vehicle with heavy accelerations while observing fuel pressure gauge reading. • **Does fuel pressure reading hold steady within 21 kPa {0.21 kgf/cm^2, 3 psi} during test?**	Yes	UNPLUG vacuum hose and RECONNECT to fuel pressure regulator. Go to next step.
		No	Go to step 29.
26	CHECK FUEL PRESSURE REGULATOR RESPONSE TO VACUUM • Key off. • Install fuel pressure tester. • Install vacuum gauge to intake manifold. • Start engine and observe both gauges. • Accelerate and decelerate engine speed to vary vacuum gauge reading. • **Does fuel pressure gauge reading increase as vacuum gauge reading decreases, or decrease as vacuum gauge reading increases?**	Yes	REMOVE vacuum gauge and fuel pressure tester. Concern is elsewhere. ☞ ENGINE SYMPTOM TROUBLESHOOTING for further direction.
		No	Go to next step.
27	CHECK VACUUM SUPPLY • Key off. • Install fuel pressure tester. • Disconnect vacuum hose at fuel pressure regulator and plug it. • Install hand held vacuum pump to fuel pressure regulator. • Start engine and let run at idle. • Observe fuel pressure while applying vacuum. • **Does fuel pressure change as vacuum changes?**	Yes	SERVICE vacuum system. UNPLUG vacuum hose and RECONNECT to pressure regulator. RECHECK fuel pressure.
		No	REPLACE fuel pressure regulator. RECHECK fuel pressure.
28	CHECK FUEL INJECTOR LEAKAGE AND FLOW • Verify that flow rate for each fuel injector is within specification using **SST** (49 E018 9A0). • **Is flow rate for each injector within specification?**	Yes	VERIFY for other leaks. If none are found, REPLACE fuel pump module. RECHECK fuel pressure.
		No	REPLACE damaged fuel injector. RECONNECT all components. RECHECK fuel pressure.
29	CHECK VOLTAGE AT FUEL PUMP VEHICLE HARNESS CONNECTOR • Key off. • Disconnect fuel pump harness connector at fuel pump. Inspect for damaged or pushed out pins, corrosion and loose wires. Service as necessary. • Key on, engine off. • Connect digital multimeter between fuel pump power circuit and fuel pump ground circuit at fuel pump vehicle harness connector. • Enter Output Test Mode and active pump circuit. Record reading. • **Is voltage greater than 10.5 volts?**	Yes	EXIT Output Test Mode. RECONNECT fuel pump harness connector. Go to next step.
		No	CHECK ground and power circuit. SERVICE as necessary. RECHECK fuel pressure.

<table>
<tr><th>STEP</th><th>INSPECTION</th><th></th><th>ACTION</th></tr>
<tr><td rowspan="2">30</td><td rowspan="2">CHECK SUPPLY FUEL LINE FOR RESTRICTIONS
• Key off.
• Observe Warnings, Cautions and Notes at beginning of this Pinpoint Test.
• Disconnect supply fuel line at fuel rail and at fuel pump.
• Inspect supply line for blockage, kinks or pinching.
• Apply 21—34 kPa {0.21—0.35 kgf/cm^2, 3—5 psi} regulated shop air to supply line at fuel rail side supply line.
• Does air flow freely through supply line?</td><td>Yes</td><td>Air flows freely.
REPLACE fuel pump.
RECHECK fuel pressure.</td></tr>
<tr><td>No</td><td>SERVICE cause of restriction.
RECHECK fuel pressure.</td></tr>
<tr><td rowspan="2">31</td><td rowspan="2">CHECK SYSTEM ABILITY TO HOLD FUEL PRESSURE WITH KEY ON
• Install fuel pressure gauge.
• Cycle key on then off several times.
• Turn key on and engine off, monitor fuel pressure gauge.
• Does fuel pressure remain within 34 kPa {0.35 kgf/cm^2, 5 psi} of highest reading after 10 seconds?</td><td>Yes</td><td>For Continuous DTCs P1130, P1150, P0171 and P0174:
Go to step 33.</td></tr>
<tr><td>No</td><td>For DTCs P0172 and P0175:
Go to step 35.</td></tr>
<tr><td rowspan="2">32</td><td rowspan="2">CHECK ABILITY OF FUEL INJECTOR(S) TO DELIVER FUEL
• Pressure gauge installed.
• Cycle key three times.
• Monitor pressure gauge while cranking engine for at least five seconds.
• Was there pressure drop greater than 34 kPa {0.35 kgf/cm^2, 5 psi} while cranking engine?</td><td>Yes</td><td>EEC-V system is not cause of no start.
REMOVE fuel pressure gauge.
☞ ENGINE SYMPTOM TROUBLESHOOTING [KL] for future diagnosis.</td></tr>
<tr><td>No</td><td>REMOVE fuel pressure gauge.
Go to next step.</td></tr>
<tr><td rowspan="2">33</td><td rowspan="2">CHECK RESISTANCE OF FUEL INJECTOR(S) AND HARNESS
• Key off.

Note
• This erases Continuous Memory DTCs

• Disconnect PCM. Inspect for damaged or pushed out pins, corrosion and loose wires. Service as necessary.
• Install breakout box. Leave PCM disconnected.

Note
• If misfire DTCs are displayed with fuel control DTCs, use misfire DTCs to determine fuel injector circuits requiring testing.

• Measure resistance between suspect fuel injector Test Pin(s) and Test Pin 71/97 at breakout box using chart below.
<table><tr><th>Cylinder Number</th><th>Test pin</th><th>Cylinder Number</th><th>Test pin</th></tr><tr><td>1</td><td>75</td><td>4</td><td>100</td></tr><tr><td>2</td><td>101</td><td>5</td><td>73</td></tr><tr><td>3</td><td>74</td><td>6</td><td>99</td></tr></table>W6U101WHK
• Is resistance between 12.0—16.0 ohms?</td><td>Yes</td><td>Fuel injector and harness resistance is okay.
Go to step 36.</td></tr>
<tr><td>No</td><td>Go to next step.</td></tr>
</table>

<table>
<tr><th>STEP</th><th>INSPECTION</th><th></th><th>ACTION</th></tr>
<tr><td rowspan="2">34</td><td rowspan="2">CHECK RESISTANCE OF FUEL INJECTOR HARNESS
• Key off.
• Breakout box installed. PCM disconnected.
• Disconnect fuel injector harness connector at suspected fuel injector.
• Measure resistance between Test Pin 71/97 at breakout box and power circuit pin at suspected fuel injector harness connector.
• Measure resistance between fuel injector Test Pin(s) at breakout box and Fuel Injector Signal Pin at fuel injector connector. (Refer to step 33 for Injector Pin location.)
• Is each resistance less than 5.0 ohms?</td><td>Yes</td><td>Go to next step.</td></tr>
<tr><td>No</td><td>SERVICE open harness circuit.
REMOVE breakout box.
RECONNECT PCM and fuel injector(s).
RESET PCM to completely clear DTCs.
☞ After Repair Procedure
COMPLETE OBD II Drive Mode.
RERUN OBD Test.</td></tr>
<tr><td rowspan="2">35</td><td rowspan="2">CHECK FUEL INJECTOR HARNESS CIRCUIT FOR SHORT TO POWER OR GROUND
• Key off.
• Breakout box installed. PCM disconnected.
• Disconnect suspected fuel injector harness.
• Measure resistance between fuel injector Test Pin(s) (refer to step 33) and Test Pin(s) 71 or 97, 24 and 103 at breakout box.
• Measure resistance between Fuel injector Test Pin(s) at breakout box and chassis ground.
• Is each resistance greater than 10,000 ohms?</td><td>Yes</td><td>Go to next step.</td></tr>
<tr><td>No</td><td>SERVICE short circuit.
REMOVE breakout box.
RECONNECT PCM and all fuel injector(s).
RESET PCM to completely clear DTCs.
☞ After Repair Procedure
COMPLETE OBD II Drive Mode.
RERUN OBD Test.</td></tr>
<tr><td rowspan="2">36</td><td rowspan="2">CHECK INJECTOR DRIVER SIGNAL

Note
• This test requires standard 12 volt test lamp.

• Key off.
• Install breakout box.
• Connect test lamp between Test Pin 71/97 and suspected fuel injector Test Pin(s).
<table><tr><th>Cylinder Number</th><th>Test pin</th><th>Cylinder Number</th><th>Test pin</th></tr><tr><td>1</td><td>75</td><td>4</td><td>100</td></tr><tr><td>2</td><td>101</td><td>5</td><td>73</td></tr><tr><td>3</td><td>74</td><td>6</td><td>99</td></tr></table>W6U101WKP
Note
• At idle properly operating system will cause dim glow on test lamp.

• Crank or start engine.
• Does test lamp have dim glow while cranking or running engine?</td><td>Yes</td><td>REMOVE breakout box.
RECONNECT PCM.
Go to next step.</td></tr>
<tr><td>No</td><td>No light and/or Continuous bright light.
REPLACE PCM
REMOVE breakout box.
COMPLETE OBD II Drive Mode.
RERUN OBD Test.</td></tr>
</table>

STEP	INSPECTION		ACTION
37	FLOW TEST FUEL INJECTOR(S) • **Is leakage and flow within specification?**	Yes	**DTCs P0171, P0174, P1130, P1131, P1150 and P1151:** Go to next step. **DTCs P0172 and P0175:** Fault that produced DTC is an intermittent. Go to ENGINE SYMPTOM TROUBLESHOOTING No. 27 with following data: SHRTFT1, SHRTFT2, LONGFT1, LONGFT2 PIDs and list of possible causes. **For DTCs P1132 and P1152:** Go to step 41.
		No	REPLACE fuel injector. RESET PCM to completely clear DTCs. ☞ After Repair Procedure COMPLETE OBD II Drive Mode. RERUN OBD Test.

38	INSPECT INDUCTION SYSTEM FOR AIR LEAKS
	• Inspect following areas for signs of air leaks:
	  • Inlet tube(s) from air cleaner to throttle body.
	  • Gaskets which seal upper and lower intake manifold.
	  • Vacuum hoses and lines for cranks and proper connections.
	  • Positive crankcase ventilation (PCV) system.
	• **Are there any sings of leaks or damage?**
		Yes	SERVICE as necessary.
			RESET PCM to completely clear DTCs.
			☞ After Repair Procedure
			COMPLETE OBD II Drive Mode.
			RERUN OBD Test.

		No	**CONTINUOUS DTCs P0171, P0174, P1130 or P1150:** Fault that produced DTC is an intermittent. Go to SYMPTOM TROUBLESHOOTING No. 27 with following data: SHORTFT1, SHORTFT2, LONGFT1, LONGFT2, O2S–11 and O2S–21 PIDs and list of possible causes. **DTCs P1131 and P1130 or P1151 and P1150:** Go to next step.
39	CHECK CYLINDER COMPRESSION **Note** • Use Misfire DTC(s) displayed on prior DTC retrieval to determine which cylinder to perform compression. • Check cylinder compression. ☞ 01–10B COMPRESSION INSPECTION [KL] • **Are cylinder compression readings within specification?**	Yes	**For DTCs P1131, P1130, P1151 and P1150:** Go to next step. **For DTCs P1132 and P1152:** Go to step 41. **Misfire DTCs displayed with fuel control DTCs:** Go to appropriate misfire monitor DTC.
		No	SERVICE as necessary. RESET PCM to completely clear DTCs. ☞ After Repair Procedure COMPLETE OBD II Drive Mode. RERUN OBD Test.

STEP	INSPECTION		ACTION
40	CHECK HEATED OXYGEN SENSOR ABILITY TO GENERATE VOLTAGE GREATER THAN 0.5 VOLT **Note** • Any vacuum or air leaks can cause DTCs P1131, P1151, P1130 and P1150. **Possible causes:** • Leaking vacuum actuators. • Engine sealing (Intake and IAC). • EGR system (valve). • PCV system (hose and valve). • Unmetered air leaks between throttle body and MAF sensor component. • Silicone contaminated heated oxygen sensor. • Key off. • Inspect heated oxygen sensor harness for chafing, burned out wires or other damage and service as necessary. • Disconnect suspected heated oxygen sensor from vehicle harness. • Connect digital multimeter to heated oxygen sensor signal and heated oxygen sensor ground or heated oxygen sensor ground at sensor connector. • Run engine at 2,000 rpm for three minutes. • Rerun key on engine running (KOER) Self-Test and monitor heated oxygen sensor voltage. • **Is voltage greater than 0.5 volt during or at end of Self-Test?**	Yes	Go to step 43.
		No	REPLACE heated oxygen sensor. RESET PCM to completely clear DTCs. ☞ After Repair Procedure COMPLETE OBD II Drive Mode. RERUN OBD Test.
41	ATTEMPT TO GENERATE DTCS P1131 AND P1151 • Key off. • Disconnect heated oxygen sensor. • Jumper heated oxygen sensor Signal at heated oxygen sensor harness vehicle connector to battery negative post. • Activate KOER Self-Test. • **Are DTCs P1131 or P1151 present?**	Yes	REMOVE jumper. Go to next step.
		No	REMOVE jumper. RECONNECT heated oxygen sensor. DISCONNECT PCM. INSPECT both ends of connector for damaged or pushed out pins, moisture, corrosion, loose pins and SERVICE as necessary. If okay, REPLACE PCM. RERUN KOER Self-test.
42	HEATED OXYGEN SENSOR CHECK • Key off. • Disconnect suspected heated oxygen sensor. • Connect digital multimeter to heated oxygen sensor signal circuit and heated oxygen sensor ground circuit at sensor connector. • Disconnect vacuum hose from vacuum tree. • Start engine and run at 2000 rpm. • **Does voltage reading indicate less than 0.4 volt within 30 seconds?**	Yes	RECONNECT vacuum hose and heated oxygen sensor. Go to next step.
		No	REPLACE heated oxygen sensor. RECONNECT vacuum hose. RESET PCM to completely clear DTCs. ☞ After Repair Procedure COMPLETE OBD II Drive Mode. RERUN OBD Test.

STEP	INSPECTION		ACTION

43	MONITOR HEATED OXYGEN SENSOR (PID) FOR PROPER SWITCHING
	• Key on, engine running.
	• Engine at operating temperature.
	• Connect NGS tester.
	
	Note
	• Heated oxygen sensor PID displayed as O2S11 (Front RH) or O2S21 (Front LH) on NGS tester.
	
	• Access suspect heated oxygen sensor.
	  • O2S11
	  • O2S21
	• Monitor PID while wiggling, bending, and shaking small sections of harness from PCM to heated oxygen sensor.
	• **Did heated oxygen sensor voltage stay high (greater than 0.45 volt) or low (less than 0.45 volt)?**
		Yes	ISOLATE cause of lack of heated oxygen sensor switching Service harness or connector.
			RESET PCM to completely clear DTCs.
			☞ After Repair Procedure
			COMPLETE OBD II Drive Mode.
			RERUN OBD Test.

		No	Go to next step.
44	TEST DRIVE WHILE MONITORING HEATED OXYGEN SENSOR PID FOR PROPER SWITCHING **Note** • This test step requires an observer to monitor PID for proper operation. • NGS tester connected. • While observer views heated oxygen sensor PID, test drive vehicle under different road conditions in an attempt to simulate original fault. • **Does heated oxygen sensor appear to switch properly?**	Yes	UNABLE to duplicate fault. RESET PCM to completely clear DTCs. ☞ After Repair Procedure Testing complete at this time.
		No	REPLACE heated oxygen sensor. RESET PCM to completely clear DTCs. ☞ After Repair Procedure COMPLETE OBD II Drive Mode. RERUN OBD Test.

KOEO DTC P0230	Fuel pump circuit malfunction		
DESCRIPTION	• DTC P0230 indicates fuel pump circuit failure		
[Possible Cause] • Damaged fuel pump relay • Damaged PCM • Open or shorted circuit			
STEP	**INSPECTION**		**ACTION**
1	CHECK FOR POWER TO FUEL PUMP RELAY • Disconnect fuel pump relay. • Key on, engine off. • Measure voltage between power circuit at fuel pump relay vehicle harness connector and chassis ground. • **Is voltage greater than 10.5 volts?**	Yes	Go to next step.
		No	SERVICE open in power circuit between ignition switch and fuel pump relay. RECONNECT fuel pump relay. RERUN OBD Test.
2	CHECK FUEL PUMP RELAY • **Is fuel pump relay okay?**	Yes	Go to next step.
		No	REPLACE fuel pump relay. RERUN OBD Test.

3	CHECK FUEL PUMP CIRCUIT FOR SHORT TO POWER
	• Key off.
	• Disconnect fuel pump relay.
	• Disconnect PCM. Inspect for damaged or pushed out pins, corrosion, loose wires, etc. Service as necessary.
	• Install breakout box. Leave PCM disconnected.
	• Key on, engine off.
	• Measure voltage between appropriate Test Pin at breakout box and chassis ground.
	  • With immobilizer system=Test Pin 70
	  • Without immobilizer system=Test Pin 80
	• **Is voltage less than 1.0 volt?**
		Yes	Go to next step.

		No	SERVICE short to power. REMOVE breakout box. RECONNECT all components. RERUN OBD Test.
4	CHECK FUEL PUMP CIRCUIT FOR SHORT TO GROUND • Key off. • Disconnect NGS tester from DLC. • Breakout box installed. PCM disconnected. • Disconnect fuel pump relay. • Measure resistance between Test Pin 80 and Test Pins 51 or 103 and 91 at breakout box. • **Is resistance greater than 10,000 ohms?**	Yes	Go to next step.
		No	SERVICE short circuit. REMOVE breakout box. RECONNECT all components. RERUN OBD Test.
5	CHECK FUEL PUMP CIRCUIT CONTINUITY • Key off. • Breakout box installed, PCM disconnected. • Disconnect fuel pump relay. • Measure resistance between Fuel Pump circuit at fuel pump relay vehicle harness connector and Test Pin 80 at breakout box. • **Is resistance less than 5.0 ohms?**	Yes	REPLACE PCM. RECONNECT all components. RERUN OBD Test.
		No	SERVICE open circuit. REMOVE breakout box. RECONNECT all components. RERUN OBD Test.

DTC	**P0300**	**Random misfire detected**
	P0301	**Cylinder No. 1 misfire detected**
	P0302	**Cylinder No. 2 misfire detected**
	P0303	**Cylinder No. 3 misfire detected**
	P0304	**Cylinder No. 4 misfire detected**
	P0305	**Cylinder No. 5 misfire detected**
	P0306	**Cylinder No. 6 misfire detected**
DESCRIPTION		• DTC P0300 indicates multiple cylinders misfiring, or cannot identify cylinder due to Camshaft Position sensor failure • DTC P0301, P0302, P0303, P0304, P0305 or P0306 indicates specific cylinder misfiring

[Possible Cause]
- Ignition system
- Fuel injection
- Fuel pressure
- Evaporative emission system
- Purge solenoid valve
- Base engine
- Running out of fuel

Warning
Following troubleshooting flow chart contains fuel system diagnosis and repair procedures. Read following warnings before performing fuel system service:
- **Fuel vapor is hazardous. It can easily ignite, causing serious injury and damage. Always keep sparks and flames away from fuel.**
- **Fuel line spills and leaks are dangerous. Fuel can ignite and cause serious injuries or death and damage. Fuel can also irritate skin and eyes. To prevent this, always complete "BEFORE REPAIR PROCEDURE" and "AFTER REPAIR PROCEDURE" described in this manual.**
  ☞ 01–14 BEFORE REPAIR PROCEDURE
  ☞ 01–14 AFTER REPAIR PROCEDURE

STEP	INSPECTION		ACTION
1	CHECK POSSIBLE CAUSES TO MISFIRE **Note** • Running out of fuel may turn on MIL and possibly store Continuous Misfire DTC. • **Has vehicle recently run out of fuel?**	Yes	OBD II system okay. RESET PCM to completely clear DTCs. ☞ After Repair Procedure RETURN vehicle to customer.
		No	Go to next step.
2	CHECK FOR OTHER NON-MISFIRE CONTINUOUS MEMORY DTCS Check for other non-misfire Continuous Memory DTCs which could cause Misfire DTC. Possible causes: • CMP sensor • Ignition coil primary circuit • Knock sensor • **Are other non-misfire Continuous Memory DTCs present?**	Yes	ADDRESS next Continuous DTC. DISREGARD Misfire DTC at this time. Go to DTC charts and PROCEED as required.
		No	Go to next step.
3	CHECK FOR ON-DEMAND SELF-TEST DTCS **Note** • Check for any Key On Engine Off (KOEO) DTCs, which could cause Misfire DTC. • Perform KOEO self-test. • **Are any KOEO DTCs displayed on NGS tester?**	Yes	Go to DTC charts and PROCEED as required.
		No	CHECK spark plugs and secondary wires. If okay, go to next step.
4	CHECK FOR OTHER KEY ON ENGINE RUNNING (KOER) DTCS **Note** • Check for any KOER DTCs which could cause misfire DTCs. • **Are any KOER DTCs displayed on NGS tester?**	Yes	**If DTCs P1131, P1151 are present:** Go to next step. **All others:** Go to DTC charts and PROCEED as required.
		No	Go to next step.

<table>
<tr><th>STEP</th><th>INSPECTION</th><th></th><th>ACTION</th></tr>
<tr><td>5</td><td>CHECK RESISTANCE OF INJECTOR(S) AND HARNESS
• Key off.
• Disconnect PCM. Inspect for damaged or pushed out pins, corrosion, loose wires etc. Service as necessary.
• Install breakout box. Leave PCM disconnected.
• Measure resistance between suspect fuel injector test pin and Test Pin 71 or 97 at breakout box.
• Is resistance between 12.0—16.0 ohms?</td><td>Yes</td><td>Fuel injector and harness resistance is okay.
Go to next step.</td></tr>
<tr><td></td><td></td><td>No</td><td>Go to step 35 of pinpoint test for DTC P0171, P0172, P0174, P0175, P1130, P1131, P1132, P1150, P1151, P1152 step 35 to diagnose fuel injectors.</td></tr>
<tr><td>6</td><td>CHECK INJECTOR DRIVER SIGNAL

Note
• Requires standard 12 volt test lamp. Properly operating system will show a dim glow on Test Lamp.

• Key off.
• Breakout box installed.
• Connect PCM to breakout box.
• Connect Test Lamp between Test Pin 71 or 97 and suspect injector test pin.
<table><tr><th>Cylinder Number</th><th>Test pin</th><th>Cylinder Number</th><th>Test pin</th></tr><tr><td>1</td><td>75</td><td>4</td><td>100</td></tr><tr><td>2</td><td>101</td><td>5</td><td>73</td></tr><tr><td>3</td><td>74</td><td>6</td><td>99</td></tr></table>W6U101WKQ
• Start engine.
• Does test lamp emit dim glow while engine is running?</td><td>Yes</td><td>Go to next step.</td></tr>
<tr><td></td><td></td><td>No</td><td>No light or bright light.
REPLACE PCM.
REMOVE breakout box.
COMPLETE OBD II Drive Mode.
RERUN OBD Test.</td></tr>
<tr><td>7</td><td>CHECK FUEL PRESSURE
• Key off.
• Install fuel pressure gauge.
• Start and run engine at idle. Record fuel pressure.
• Increase engine speed to 2,500 rpm and maintain for one minute. Note and compare fuel pressure.
• Is fuel pressure between 210—310 kPa {2.1—3.1 kgf/cm^2, 31—46 psi}?</td><td>Yes</td><td>Go to next step.</td></tr>
<tr><td></td><td></td><td>No</td><td>CHECK fuel system.</td></tr>
<tr><td>8</td><td>CHECK ABILITY OF FUEL SYSTEM TO HOLD FUEL PRESSURE
• Start and run engine at idle. Note fuel pressure.
• Increase engine speed to 2,500 rpm and maintain for one minute.
• Visually check for fuel leaking at injector O-ring, fuel pressure regulator and fuel lines to fuel charging component. Service as necessary.
• Turn engine off.
• Key on, engine off.
• Does fuel pressure remain at specification within 16.5 kPa {0.16 kgf/cm^2, 5 psi} for 60 seconds?</td><td>Yes</td><td>Go to next step.</td></tr>
<tr><td></td><td></td><td>No</td><td>CHECK Fuel Delivery System is at fault.
☞ 01–14 FUEL INJECTOR INSPECTION, Fuel Leakage Test</td></tr>
</table>

STEP	INSPECTION		ACTION
9	CHECK FUEL INJECTOR FOR FLOW AND LEAKAGE • Verify that flow rate for each fuel injector is within specification using **SST** (49 L018 901). • **Is flow rate for each fuel injector within specification?**	Yes	Fuel delivery system is not likely to have caused Misfire DTC. Go to next step.
		No	REPLACE or CLEAN inoperative fuel injector(s) as required. RESET PCM to completely clear DTCs. ☞ After Repair Procedure COMPLETE OBD II Drive Mode. RERUN OBD Test.
10	CHECK VACUUM SYSTEM • Inspect all vacuum lines for damage, such as pinched lines, cracks, proper routing and component. • **Is vehicle vacuum system okay?**	Yes	Go to next step.
		No	SERVICE vacuum system. RESET PCM to completely clear DTCs. ☞ After Repair Procedure COMPLETE OBD II Drive Mode. RERUN OBD Test.
11	CHECK EVAPORATIVE EMISSION SYSTEM Misfire Monitor can be influenced by Evaporative Emission System. Steps 11–14 will diagnose Evaporative emission system. • Check charcoal canister for fuel saturation. • **Is there an excess amount of liquid fuel present in charcoal canister.**	Yes	REPLACE charcoal canister. RESET PCM to completely clear DTCs. ☞ After Repair Procedure COMPLETE OBD II Drive Mode. RERUN OBD Test.
		No	Go to next step.
12	CHECK VACUUM IN EVAPORATIVE EMISSION SYSTEM • Check for blockage/restriction or cut hoses between engine vacuum port and charcoal canister. • Check for blockage in fuel tank vent system. • **Is there fault indicated?**	Yes	REPLACE damaged vacuum hoses, or REMOVE blockage/restrictions. RESET PCM to completely clear DTCs. ☞ After Repair Procedure COMPLETE OBD II Drive Mode. RERUN OBD Test.
		No	Go to next step.
13	CHECK PURGE SOLENOID VALVE This step will verify mechanical integrity of purge solenoid valve. Solenoid and circuit have been checked electrically and reported during key on engine off (KOEO) Self-Test. • Key off. • Disconnect purge solenoid valve. • Connect 12 volt DC power source to solenoid. **Caution** • **Must be observed for proper pin orientation.** • Connect positive power source to power circuit and negative lead to purge solenoid valve circuit at purge solenoid valve harness connector. • Apply 53 kPa {407 mmHg, 16 inHg} of vacuum to manifold side of purge solenoid valve. Apply power source. • **Does solenoid open and pass air freely?**	Yes	Evaporative system is functioning properly. Go to next step for base engine concerns.
		No	REPLACE purge solenoid valve. RESET PCM to completely clear DTCs. ☞ After Repair Procedure COMPLETE OBD II Drive Mode. RERUN OBD Test.
14	CHECK FOR BASE ENGINE CONCERNS Purpose of this step is to determine if there are any Base Engine concerns that may have caused Misfire DTC or drive concern. Perform following tests in order to evaluate Base Engine integrity. • Perfom an Engine Compression test. • Perform Dynamic Valve train analysis. • Check Positive Crankcase Ventilation System. • Check possible leakage points. ☞ 01–10B COMPRESSION INSPECTION [KL] • **Is any service required?**	Yes	SERVICE as necessary. RESET PCM to completely clear DTCs. ☞ After Repair Procedure COMPLETE OBD II Drive Mode. RERUN OBD Test.
		No	Cause of Misfire DTC is intermittent and diagnosis will be in Ignition System. Check intermittent poor connection or component malfunction (SERVICE or REPLACE as necessary). ☞ 01–18 IGNITION SYSTEM INSPECTION

DTC P0320	Ignition engine speed input circuit malfunction
DESCRIPTION	• Two succesive Profile Ignition Pickup (PIP) pulses occurred resulting in an engine miss fire or stall

[Possible Cause]
- Loose wires/connectors
- Arcing secondary ignition components
- On-board transmitter (2-way radio)

STEP	INSPECTION		ACTION
1	CHECK FOLLOWING COMPONENTS • Loose wires/connectors. • Arcing secondary ignition components (coil, wires, plugs, etc.). • On-board transmitter (2-way radio). • **Are any of above present? Verify all 2-way radio installation instructions regarding routing of antenna and power lead.**	Yes	SERVICE as necessary. RERUN OBD Test.
		No	**For No starts:** Go to ENGINE SYMPTOM TROUBLESHOOTING No.5. **For Intermittent faults:** Go to ENGINE SYMPTOM TROUBLESHOOTING No.27. **All others:** Loss of PIP. REPLACE PCM.

DTC P0325	Knock sensor circuit malfunction
CODE No.	P0325
DESCRIPTION	• DTC P0325 indicates spark knock system failed.

[Possible Cause]
- PCM not receiving signal at high altitude
- Open or short in harness
- Damaged knock sensor
- Damaged PCM

STEP	INSPECTION		ACTION
1	CHECK KNOCK SENSOR VOLTAGE • Key off. • Disconnect PCM. Inspect for damage or pushed out pins, corrosion and loose wires. Service as necessary. • Install breakout box. • Key on, engine running. • Read DC voltage between terminal 57 and 77 or 103 at breakout box. • **Is reading between 2.2 and 2.6 volts?**	Yes	Go to next step.
		No	**Less than 2.2 volts:** Go to step 4. **Greater than 2.6 volts:** Go to step 6.
2	CHECK FOR INTERMITTENT CIRCUIT FAULT • Key on. • While viewing voltmeter, grasp vehicle harness as close to knock sensor as possible. Shake and bend small section of harness from knock sensor to PCM. • Tap PCM and knock sensor connectors if possible. • **Is knock sensor reading changing?**	Yes	Isolate fault and service as required. Reconnect PCM. RESET PCM to completely clear DTCs. ☞ After Repair Procedure COMPLETE OBD II Drive Mode. RERUN OBD Test.
		No	Go to next step.
3	CHECK FOR VOLTAGE INCREASE • Key off. • PCM disconnected. • Connect NGS tester. • Start and run engine. • Monitor voltage on AC setting at idle and at 3,000 rpm between suspect knock sensor and ground. • **Does AC voltage reading increase?**	Yes	Replace PCM. Reconnect all components. RESET PCM to completely clear DTCs. ☞ After Repair Procedure COMPLETE OBD II Drive Mode. RERUN OBD Test.
		No	Go to next step.

STEP	INSPECTION		ACTION
4	CHECK RESISTANCE OF KNOCK SENSOR CIRCUIT • Key off. • Breakout box installed. PCM disconnected. • Disconnect knock sensor. • Measure resistance of knock sensor signal circuit between Test Pin 57 at breakout box and same signal pin at vehicle harness connector. • Where applicable, measure resistance between Test Pin 24 at breakout box and shield pin at vehicle harness connector. • **Is resistance less than 5.0 ohms?**	Yes	Go to next step.
		No	Service open circuit. Reconnect all components. RESET PCM to completely clear DTCs. ☞ After Repair Procedure COMPLETE OBD II Drive Mode. RERUN OBD Test.
5	CHECK KNOCK SENSOR CIRCUIT SHORT TO GROUND • Key off. • Breakout box installed. PCM disconnected. • Knock sensor disconnected. • Measure resistance between Test Pin 57 and Test Pins 77 or 103 at breakout box and chassis ground. • **Is resistance greater than 10,000 ohms?**	Yes	Replace knock sensor. Reconnect all components. RESET PCM to completely clear DTCs. ☞ After Repair Procedure COMPLETE OBD II Drive Mode. RERUN OBD Test.
		No	Service short circuit. Reconnect all components. RESET PCM to completely clear DTCs. ☞ After Repair Procedure COMPLETE OBD II Drive Mode. RERUN OBD Test.
6	CHECK KNOCK SENSOR CIRCUIT SHORT TO POWER • Key off. • Breakout box installed. PCM disconnected. • Knock sensor disconnected. • Key on, engine off. • Measure voltage between Test Pin 57 and Test Pins 77 or 103 at breakout box. • **Is voltage less than 0.5 volts?**	Yes	Replace PCM. Reconnect all components. RESET PCM to completely clear DTCs. ☞ After Repair Procedure COMPLETE OBD II Drive Mode. RERUN OBD Test.
		No	Service short to ground. Reconnect all components. RESET PCM to completely clear DTCs. ☞ After Repair Procedure COMPLETE OBD II Drive Mode. RERUN OBD Test.
7	CHECK RESISTANCE OF KNOCK SENSOR • Key off. • Disconnected PCM from breakout box. • Knock sensor connected. • Measure resistance between Test Pin 57 and ground at breakout box. • **Is resistance greater than 5.11 megaohm?**	Yes	Replace knock sensor. Reconnect all components. RESET PCM to completely clear DTCs. ☞ After Repair Procedure COMPLETE OBD II Drive Mode. RERUN OBD Test.
		No	Replace PCM. Reconnect all components. RESET PCM to completely clear DTCs. ☞ After Repair Procedure COMPLETE OBD II Drive Mode. RERUN OBD Test.

DTC P0340	Camshaft position (CMP) sensor circuit malfunction
DESCRIPTION	• DTC P0340 indicates that self-test has detected CMP sensor circuit failure

[Possible Cause]
- CMP sensor circuit open
- CMP sensor circuit shorted to ground
- CMP sensor circuit shorted to power
- CMP sensor ground open
- CMP sensor power circuit open
- Damaged CMP Sensor
- Damaged PCM

STEP	INSPECTION		ACTION
1	START ENGINE • Start engine. • **Will engine start?**	Yes	Go to next step.
		No	DTC P0340 is not cause of no start. Go to ENGINE SYMPTOM TROUBLESHOOTING No.5.
2	CLEAR AND ATTEMPT TO RE-GENERATE DTC P0340 • RESET PCM to completely clear DTCs. ☞ After Repair Procedure • COMPLETE OBD II Drive Mode. • Start engine. • Increase rpm to greater than 1,500 rpm for 10 seconds. Repeat two times. • Key off. • Retrieve all Continuous Memory DTCs. • **Is DTC P0340 present?**	Yes	Go to next step.
		No	Fault that produced DTC P0340 is intermittent. Intermittent poor connection or component malfunction (REPAIR or REPLACE as necessary). Go to ENGINE SYMPTOM TROUBLESHOOTING No.27.
3	CHECK POWER CIRCUIT TO CMP SENSOR • Key off. • Disconnect CMP sensor vehicle harness connector. • Key on, engine off. • Measure voltage between power circuit at CMP sensor vehicle harness connector and battery negative post. • **Is voltage greater than 10.5 volts?**	Yes	Go to next step.
		No	SERVICE open in CMP sensor power circuit. RECONNECT all components. COMPLETE PCM. RESET PCM to completely clear DTCs. ☞ After Repair Procedure COMPLETE OBD II Drive Mode. RERUN OBD Test.
4	CHECK GROUND CIRCUIT TO CMP SENSOR • Key off. • CMP sensor disconnected. • Measure resistance between ground circuit at CMP sensor vehicle harness connector and battery negative post. • **Is resistance less than 5.0 ohms?**	Yes	Go to next step.
		No	SERVICE open in CMP sensor ground circuit. COMPLETE PCM. RESET PCM to completely clear DTCs. ☞ After Repair Procedure COMPLETE OBD II Drive Mode. RERUN OBD Test.
5	CHECK CONTINUITY TO PCM • Key off. • CMP sensor disconnected. • Disconnect PCM. Inspect for damaged or pushed out pins, corrosion, loose wires, etc. Service as necessary. • Install breakout box. • Measure resistance between signal circuit at CMP sensor vehicle harness connector and Test Pin 85 and 8 at breakout box. • **Are resistance measurements less than 5.0 ohms?**	Yes	Go to next step.
		No	SERVICE open circuit. REMOVE breakout box. RECONNECT all components. RERUN OBD Test.
6	CHECK CMP SIGNAL CIRCUIT FOR SHORT TO POWER • Key off. • CMP sensor disconnected. • Breakout box installed. • Key on, engine off. • Measure voltage between Test Pin 85 and Test Pins 51 and 103 at breakout box. • **Is voltage less than 1.0 volt?**	Yes	Go to next step.
		No	SERVICE CMP circuit for short to power. REMOVE breakout box. RECONNECT all components. RERUN OBD Test.

STEP	INSPECTION		ACTION
7	CHECK CMP SIGNAL CIRCUIT FOR SHORT TO GND OR PCM GROUND (BETWEEN PCM AND CMP SENSOR GROUND CIRCUIT) • Key off. • Breakout box installed, PCM disconnected. • CMP sensor disconnected. • Disconnect NGS tester from DLC. • Measure resistance between Test Pin 85 and Test Pins 51, 103 and 91. • **Is each resistance greater than 10,000 ohms?**	Yes	Go to next step.
		No	SERVICE CMP signal circuit for short to ground or PCM ground. REMOVE breakout box. RECONNECT all components. RERUN OBD Test.
8	CHECK FOR SHORTS IN PCM • Key off. • CMP sensor disconnected. • Breakout box installed. • Connect PCM to breakout box. • Measure resistance between Test Pin 85 and Test Pins 51, 103, 71, 97, 91, and 23 at breakout box. • **Is each resistance greater than 500 ohms?**	Yes	Go to next step.
		No	REPLACE PCM. REMOVE breakout box. RECONNECT all components. RERUN OBD Test.
9	CHECK CMP SENSOR OUTPUT • Key off. • Breakout box installed, PCM connected. • Reconnect CMP sensor. • Set voltmeter to AC (to monitor less than 5.0 volts). • Measure voltage between Test Pin 85 and Test Pins 51 and 103 at breakout box while running engine at varying rpm. • **Does AC voltage vary greater than 0.1 volt AC?**	Yes	REPLACE PCM. REMOVE breakout box. RECONNECT all components. RERUN OBD Test.
		No	REPLACE CMP sensor. REMOVE breakout box. RECONNECT all components. RERUN OBD Test.

DTC P0400	EGR flow malfunction
DESCRIPTION	• DTC P0400 indicates an EGR valve/flow failure

[Possible Cause]
- Damaged EGR valve
- Damaged EGR boost sensor
- Damaged EGR boost solenoid valve
- Restriction in exhaust system
- Damaged PCM
- Damaged harness connector
- Damaged harness

STEP	INSPECTION		ACTION
1	OUTPUT ALL DTCS • Verify that EGR boost solenoid valve connector connection and repair as necessary. • Output all continuous memory, key on engine off (KOEO) and key on engine running (KOER) self-test DTCs. ☞ 01–01B ENGINE ON-BOARD DIAGNOSIS [KL], Retrieving DTCs Procedure • **Are any other DTCs displayed on NGS tester?**	Yes	Go to DTC charts and PROCEED as required.
		No	Go to next step.
2	CHECK FOR UNMETERED AIR LEAKS • Carefully inspect following areas for potential air leaks: • Hoses connecting to MAF sensor component. • Hoses connecting to throttle body. • Intake manifold gasket leaks. • Positive crankcase ventilation (PCV) disconnected. • Vacuum lines disconnected. • Improperly seated engine oil dipstick and tube. • Exhaust leaks at flanges and gaskets. • **Are there any air leaks?**	Yes	Air leaks located. SERVICE source of air leak. RESET PCM to completely clear DTCs. ☞ After Repair Procedure COMPLETE OBD II Drive Mode. RERUN OBD Test.
		No	Go to next step.
3	CHECK CYLINDER COMPRESSION • Check cylinder compression. ☞ 01–10B COMPRESSION INSPECTION [KL] • **Are cylinder compression readings within specification?**	Yes	Go to next step.
		No	SERVICE as necessary. RESET PCM to completely clear DTCs. ☞ After Repair Procedure COMPLETE OBD II Drive Mode. RERUN OBD Test.
4	CHECK OPERATION OF EGR VALVE • Key on and listen for initialization noise (clicks) of EGR valve by using screwdriver or soundscope. **Note** • EGR valve initialization is closing action of valve observed before and after engine is started, and when engine is stopped. • **Does EGR valve initialization noise heard?**	Yes	Go to step 9.
		No	Go to next step.
5	CHECK POWER CIRCUIT TO EGR VALVE • Key off. • EGR valve disconnected. • Key on, engine off. • Measure voltage between power circuit and chassis ground at EGR valve vehicle harness connector. • **Is EGR valve power voltage greater than 10.5 volts?**	Yes	Go to next step.
		No	SERVICE open in EGR valve power circuit. RECONNECT all components. RESET PCM to completely clear DTCs. ☞ After Repair Procedure COMPLETE OBD II Drive Mode. RERUN OBD Test.

STEP	INSPECTION		ACTION
6	CHECK RESISTANCE OF EGR VALVE • Key off. • EGR valve disconnected. • Measure resistance of EGR valve coils. • **Is each resistance approximately 22 ohms?**	Yes	Go to next step.
		No	REPLACE EGR valve. RECONNECT all components. RESET PCM to completely clear DTCs. ☞ After Repair Procedure COMPLETE OBD II Drive Mode. RERUN OBD Test.

7	CHECK EGR VALVE CIRCUIT CONTINUITY
	• Key off.
	• Disconnect PCM. Inspect for damaged or pushed out pins, corrosion, loose wires, etc. Service as necessary.
	• Install breakout box, leave PCM disconnected.
	• Measure resistance between EGR signal Test Pin at breakout box and EGR valve vehicle harness connector. Record readings.
	  • EGR valve—Test Pin 68.
	  • EGR valve—Test Pin 72.
	  • EGR valve—Test Pin 46.
	  • EGR valve—Test Pin 56.
	• **Is each resistance less than 5.0 ohms?**
		Yes	Go to next step.

		No	SERVICE open in EGR valve harness circuit. REMOVE breakout box. RECONNECT all components. RESET PCM to completely clear DTCs. ☞ After Repair Procedure COMPLETE OBD II Drive Mode. RERUN OBD Test.
8	CHECK EGR VALVE CIRCUIT FOR SHORT TO POWER AND SHORT TO GROUND • Key off. • EGR valve disconnected. • Breakout box installed. • Measure resistance between Test Pins 46, 56, 68, 72 and Test Pins 71, 97 and 90 at breakout box. • Measure resistance between Test Pins 46, 56, 68, 72 and Test Pins 51,103 and 91 at breakout box. • **Is each resistance greater than 10,000 ohms?**	Yes	REPLACE EGR valve. REMOVE breakout box. RECONNECT all components. RESET PCM to completely clear DTCs. ☞ After Repair Procedure COMPLETE OBD II Drive Mode. RERUN OBD Test.
		No	SERVICE short in EGR valve harness circuit. REMOVE breakout box. RECONNECT all components. RESET PCM to completely clear DTCs. ☞ After Repair Procedure COMPLETE OBD II Drive Mode. RERUN OBD Test.
9	CHECK POWER CIRCUIT TO EGR BOOST SOLENOID VALVE • Key off. • EGR boost solenoid valve disconnected. • Key on, engine off. • Measure voltage between power circuit and chassis ground at EGR boost solenoid valve vehicle harness connector. • **Is EGR boost solenoid valve power circuit voltage greater than 10.5 volts?**	Yes	Go to next step.
		No	SERVICE open in EGR boost solenoid valve power circuit. RECONNECT all components. RESET PCM to completely clear DTCs. ☞ After Repair Procedure COMPLETE OBD II Drive Mode. RERUN OBD Test.
10	CHECK RESISTANCE OF EGR BOOST SOLENOID VALVE • Key off. • EGR boost solenoid valve disconnected. • Measure EGR boost solenoid valve resistance. • **Is resistance between 30 and 70 ohms?**	Yes	Go to next step.
		No	REPLACE EGR boost solenoid valve. RESET PCM to completely clear DTCs. ☞ After Repair Procedure COMPLETE OBD II Drive Mode. RERUN OBD Test.
11	CHECK EGR BOOST SOLENOID VALVE CIRCUIT CONTINUITY • Key off. • EGR boost solenoid valve disconnected. • Disconnect PCM. Inspect for damaged or pushed out pins, corrosion, loose wires, etc. Service as necessary. • Install breakout box. • Measure resistance between Test Pin 98 at breakout box and EGR boost solenoid valve circuit at solenoid valve vehicle harness connector. • **Is resistance less than 5.0 ohms?**	Yes	Go to next step.
		No	SERVICE open in EGR boost solenoid valve harness circuit. REMOVE breakout box. RECONNECT all components. RESET PCM to completely clear DTCs. ☞ After Repair Procedure COMPLETE OBD II Drive Mode. RERUN OBD Test.

STEP	INSPECTION		ACTION
12	CHECK EGR BOOST SOLENOID VALVE CIRCUIT FOR SHORT TO POWER AND SHORT TO GROUND • EGR boost solenoid valve disconnected. • Breakout box installed. • Measure resistance between Test Pin 98 and Test Pins 71, 97 and 90 at breakout box. • Measure resistance between Test Pin 98 and Test Pins 51, 103 and 91 at breakout box. • **Is each resistance greater than 10,000 ohms?**	Yes	REMOVE breakout box. RECONNECT all components. Go to next step.
		No	SERVICE short in EGR boost solenoid valve harness circuit. REMOVE breakout box. RECONNECT all components. RESET PCM to completely clear DTCs. ☞ After Repair Procedure COMPLETE OBD II Drive Mode. RERUN OBD Test.
13	CHECK OPERATION OF EGR BOOST SOLENOID VALVE • Key off. • Breakout box installed. PCM connected. • Disconnect vacuum line from EGR boost solenoid valve to intake manifold vacuum at EGR boost solenoid valve. • Install vacuum pump at input port of EGR boost solenoid valve and apply –27— –33 kPa {–203— –247 mmHg, –8— –10 inHg} of vacuum. • Disconnect vacuum line from EGR boost sensor solenoid valve to EGR boost sensor at EGR boost sensor. Inspect vacuum line for damage, service as necessary. • Install vacuum gauge at unattached end of vacuum line. • Key on. • Jumper Test Pin 98 to ground at breakout box and observe vacuum gauge. Remove jumper. • Apply –27— –33 kPa {–203— –247 mmHg, –8— –10 inHg} of vacuum to EGR boost solenoid valve once again. • Again jumper Test Pin 98 to ground at breakout box and observe vacuum gauge. Remove jumper. • Key off. • **Was vacuum signal indicated at any time by vacuum gauge?**	Yes	Fault that produced DTC P0400 is intermittent, and cannot be identified at this time. REMOVE vacuum pump and gauge. RECONNECT all vacuum lines. Possible intermittent poor connection or component malfunction. (SERVICE or REPLACE as necessary). Go to SYMPTOM TROUBLESHOOTING No. 27.
		No	REPLACE damaged EGR boost solenoid valve. REMOVE breakout box. REMOVE vacuum gauge and vacuum pump. RECONNECT all components. RESET PCM to completely clear DTCs. ☞ After Repair Procedure COMPLETE OBD II Drive Mode. RERUN OBD Test.

DTC P0420	Catalyst efficiency below threshold
DESCRIPTION	• DTCs P0420 indicate catalyst system efficiency is below acceptable threshold

[Possible Cause]

- Use of leaded fuel
- Oil contamination
- Cylinder misfiring
- Damaged heated oxygen sensor
- Damaged ECT sensor
- Downstream heated oxygen sensor wires improperly connected
- Fuel pressure to high
- Damaged exhaust system pipe
- Damaged exhaust manifold
- Damaged silencer/tail-pipe component
- Damaged catalytic converter

Warning

Following troubleshooting flow chart contains fuel system diagnosis and repair procedures. Read following warnings before performing fuel system service:

- **Fuel vapor is hazardous. It can easily ignite, causing serious injury and damage. Always keep sparks and flames away from fuel.**
- **Fuel line spills and leaks are dangerous. Fuel can ignite and cause serious injuries or death and damage. Fuel can also irritate skin and eyes. To prevent this, always complete "BEFORE REPAIR PROCEDURE" and "AFTER REPAIR PROCEDURE" described in this manual.**
  - **☞ 01–14 BEFORE REPAIR PROCEDURE**
  - **☞ 01–14 AFTER REPAIR PROCEDURE**

STEP	INSPECTION		ACTION
1	CHECK FOR MISFIRE MONITOR DTC **Note** • Complete spark timing check in OBD Test before proceeding with this step. Spark timing retarded below specification may increase exhaust gas temperature and decrease catalyst efficiency overtime. ☞ 01–17 IGNITION SYSTEM INSPECTION **Note** Be sure customer has not: • Refueled vehicle with leaded gasoline. • Experienced excessive oil consumption. **Note** • Internal deterioration of catalytic converter is usually caused by abnormal engine operation upstream of catalyst. Events that may produce higher than normal temperature in catalyst are particularly suspect. For example, misfiring can cause higher than normal catalyst operating temperature higher than normal. • Key on, engine off. • Retrieve and record all Continuous Memory DTCs. • **Were any of following misfire monitor DTCs recorded: P0300, P0301, P0302, P0303, P0304, P0305 and P0306?**	Yes	Go to pinpoint test for misfire DTCs.
		No	Go to next step.

STEP	INSPECTION		ACTION
2	CHECK FOR HEATED OXYGEN SENSOR MONITOR DTC **Note** • Incorrect heated oxygen sensor signal input (e.g. rich/lean input signal when engine is operating under lean/rich conditions) may cause an abnormal temperature increase in catalyst. **Note** • Non-California applications will not have an active Heated Oxygen Sensor Monitor. As result, Catalyst Efficiency Monitor DTC can be generated for rear heated oxygen sensor concern. To check for heated oxygen sensor concerns go to heated oxygen sensor inspection. If any repairactions are necessary procedure, run key on engine running (KOER) Self-Test to verify repair. If repair actions are not necessary, go to step 3. • **Were any of following heated oxygen sensor monitor DTCs recorded in step 1: P0156?**	Yes	Go to appropriate DTC test.
		No	Go to next step.
3	CHECK FOR ECT SENSOR DTCS **Note** • ECT sensor DTCs can indicate that thermostat is not operating correctly or that engine coolant level is not filled to specification. Resulting in above normal operating temperatures. • **Were any of following ECT sensor DTCs recorded: P0117, P0118, P0125 and P1117?**	Yes	Go to appropriate DTC test.
		No	Go to next step.
4	CHECK FOR ANY OTHER DTCS • **Were any other DTCs recorded in step 1?**	Yes	Go to appropriate DTC test.
		No	Go to next step.
5	CHECK DOWNSTREAM HEATED OXYGEN SENSOR WIRING AND PCM CONNECTIONS **Note** • If electrical connections of downstream heated oxygen sensor continuous are interchanged or crossed, catalyst Efficiency Monitor Test will fail. • Inspect wiring of each rear heated oxygen sensor for proper routing and connection. • Disconnect PCM, Inspect for damaged or pushed out pins, corrosion and loose wires. • **Are there any wiring or connection concerns?**	Yes	SERVICE any wiring or connection concerns. For PCM pin concerns, REPLACE PCM. RECONNECT all components. COMPLETE OBD II Drive Mode. RERUN OBD Test.
		No	No PCM root causes related to DTCs or symptoms. Go to next step.

STEP	INSPECTION		ACTION
6	CHECK CATALYST MONITOR OPERATION • Key off. • NGS tester connected. • Key on, engine on. • Select PID/DATA MONITOR AND RECORD and monitor O2S12 and O2S13 PID. • Drive vehicle for approximately 10 min. at 64—96 km/h {40—60 MPH}. • Allow vehicle to idle in Neutral or Park. • Maintain idle engine speed. • Record PID/DATA and count inversion times of O2S12 and O2S13. • Calculate devide O2S12 by O2S13. • **Is ratio of O2S12 and O2S13 greater than 2.0?**	Yes	REPLACE PCM. COMPLETE OBD II Drive Mode. RERUN OBD Test.
		No	REPEAT step. If ratio of O2S12 and O2S13 is below 2.0 after three attempts, go to next step.
7	CHECK FUEL PRESSURE **Note** • Fuel pressures above specification may produce an abnormally rich air/fuel mixture. Rich air/fuel mixture may cause higher than normal catalyst operating temperatures. • Key off. • Inspection vacuum hose going to fuel pressure regulator for proper installation, cracks, etc. Service as necessary. • Install fuel pressure gauge. • Verify vacuum source to fuel pressure regulator. • Start and run engine at idle. Record fuel pressure. • Increase engine speed to 2,500 rpm and maintain for one minute. Record fuel pressure. • **Is fuel pressure between 210—310 kPa {2.2—3.1 kgf/cm^2, 31—46 psi}?**	Yes	Fuel pressure is okay. REMOVE fuel pressure gauge. Go to next step.
		No	Fuel pressure is out of specification. Inspect Fuel Delivery System. ☞ 01–14 FUEL INJECTOR INSPECTION, Fuel Leakage Inspection RESET PCM to completely clear DTCs. ☞ After Repair Procedure COMPLETE OBD II Drive Mode. RERUN OBD Test.

8	CHECK FOR OBVIOUS LEAK SOURCES IN EXHAUST SYSTEM
	Note
	• If catalyst in series with leaking exhaust system, it can cause Catalyst Efficiency Monitor Test to fail.
	• Key off.
	• Inspect following for leaks, cracks, loose connections or punctures:
	  • Exhaust manifold
	  • Front exhaust pipe
	  • Rear exhaust pipe
	  • Silencer/tail pipe component
	• **Are above components free of cracks and punctures, etc.?**
		Yes	CHECK that exhaust manifold to catalyst inlet pipe joint is tight.
			Go to next step.

		No	REPLACE/SERVICE leak source(s). RESET PCM to completely clear DTCs. ☞ After Repair Procedure COMPLETE OBD II Drive Mode. RERUN OBD Test.

9	CHECK FOR OBVIOUS RESTRICTIONS IN EXHAUST SYSTEM
	• Inspect following for dents, areas of collapsed material and unusual bending:
	  • Front exhaust pipe
	  • Rear exhaust pipe
	  • Silencer/tail pipe component
	• **Are above components free of dents and areas of collapsed material or unusual bending, etc.?**
		Yes	Go to next step.

		No	REPLACE/SERVICE restricted component(s) as necessary. RESET PCM to completely clear DTCs. ☞ After Repair Procedure COMPLETE OBD II Drive Mode. RERUN OBD Test.

STEP	INSPECTION		ACTION
10	CHECK MANIFOLD VACUUM FOR INDICATION OF EXCESSIVE EXHAUST SYSTEM RESTRICTION • Attach vacuum gauge to intake manifold vacuum source. • Install tachometer. • Observe vacuum gauge needle while performing following: **Note** • Vacuum gauge reading may be normal when engine is first started and idling. However, excessive restriction in exhaust system will cause vacuum. Gauge needle to drop to low point even while engine is idling. • Start engine and gradually increase rpm to 2,000 with transaxle in NEUTRAL • Decrease engine speed to base idle rpm. • Key off. • **Did manifold vacuum rise above 54 kPa {407 mmHg, 16 inHg} with engine rpm at 2,000?**	Yes	Go to next step.
		No	Manifold vacuum did not reach an acceptable level. Excessive restriction may be present. Go to step 12.
11	CHECK MANIFOLD VACUUM FOR INDICATION OF MODERATE EXHAUST SYSTEM RESTRICTION • Vacuum gauge installed. • Tachometer installed. • Key on, engine idling. • Increase engine speed gradually from base idle rpm to 2,000 rpm with transaxle in NEUTRAL. • Observe vacuum gauge needle rises while maintaining increased engine rpm. **Note** • On non-restricted exhaust system, vacuum gauge needle will rise quickly to normal range as increased rpm is maintained. • On restricted exhaust system, vacuum gauge needle will rise slowly to normal range as increased rpm is maintained. **Note** • As increased rpm is maintained, rate of speed of vacuum gauge needle rising to normal range is slower on restricted system than on non-restricted system. • Decrease engine speed to base idle rpm. • Key off. • **Is rate of speed that vacuum gauge needle rises back to normal range (above 54 kPa {407 mmHg, 16 inHg}) much slower than that of non-restricted system?**	Yes	Moderate restriction may be present. Go to next step.
		No	No indications of restrictions or leaks have been detected in exhaust system. If here because of DTCs P0420 and P0421 are presenting catalytic converter is chemically inactive. REMOVE vacuum gauge and tachometer. REPLACE catalytic converter. RESET PCM to completely clear DTCs. ☞ After Repair Procedure COMPLETE OBD II Drive Mode. RERUN OBD Test. For further symptom diagnosis (e.g. Lack of power, Loss of Power, or No Start). ☞ 01–01B ENGINE SYMPTOM TROUBLESHOOTING [KL].

STEP	INSPECTION		ACTION
12	CHECK MANIFOLD VACUUM WITH EXHAUST MANIFOLD DISCONNECTED FOR INDICATION OF RESTRICTION • Key off. • Disconnect exhaust system immediately after catalytic converter. • Repeat vacuum measurement from step 10. • **Did vacuum needle quickly rise above 54 kPa {407 mmHg, 16 inHg} with engine rpm at 2,000?** **Note** • Intake manifold gasket leak can also cause vacuum gauge needle to remain well below normal range.	Yes	Exhaust system restriction is downstream of exhaust manifold. RECONNECT exhaust system at exhaust manifold. Go to next step.
		No	Restriction is present in exhaust manifold. REMOVE vacuum gauge and tachometer. INSPECT each exhaust port for casting flash/restrictions by dropping length of chain into it. **Note** • Do not use wire or lamp to check ports. Restriction can be small enough for both to pass through, but large enough to cause excessive back pressure at high engine rpm. REPLACE exhaust manifold if unable to remove casting flash/restriction. RESET PCM to completely clear DTCs. ☞ After Repair Procedure COMPLETE OBD II Drive Mode. RERUN OBD Test.
13	CHECK MANIFOLD VACUUM WITH SILENCER/TAIL-PIPE COMPONENT DISCONNECTED FOR INDICATION OF RESTRICTION • Key off. • Disconnect silencer/tail pipe component located after catalytic converter. • Repeat vacuum measurement from test step 10. • **Did vacuum needle quickly rise above 54 kPa {407 mmHg, 16 inHg} with engine rpm at 2,000?**	Yes	There is restriction in silencer/tail-pipe component. REPLACE silencer/tail-pipe component. REMOVE vacuum gauge and tachometer. RESET PCM to completely clear DTCs. ☞ After Repair Procedure COMPLETE OBD II Drive Mode. RERUN OBD Test.
		No	There is restriction in three way catalytic converter. REMOVE vacuum gauge and tachometer. REPLACE the catalytic converter. INSPECT silencer to be certain converter debris has not entered. RECONNECT silencer/tail-pipe component. RESET PCM to completely clear DTCs. ☞ After Repair Procedure COMPLETE OBD II Drive Mode. RERUN OBD Test.

DTC P0442	Evaporative emission control system leak detected (Small leak)
DESCRIPTION	• DTC P0442 indicates that leak has been detected [as small as 1 mm (0.040 inch)] in Evaporative Emission System.

[Possible Cause]

- Purge solenoid valve malfunction
- Canister Drain Cut Valve (CDCV) malfunction
- Loose fuel filler cup
- Charcoal canister malfunction
- Catch tank malfunction
- Pressure control valve malfunction
- Cracked fuel tank
- Fuel tank component parts poorly installed
- Evaporative hose damaged or loose
- Barometric absolute pressure sensor malfunction
- Fuel tank level sensor malfunction
- Fuel tank pressure sensor malfunction
- Engine coolant temperature sensor malfunction
- Intake air temperature sensor malfunction
- Throttle position sensor malfunction
- Mass air flow sensor malfunction
- Vehicle speed sensor malfunction
- Poor connection of connector

Warning

Following troubleshooting flow chart contains fuel system diagnosis and repair procedures. Read following warnings before performing fuel system service:

- **Fuel vapor is hazardous. It can easily ignite, causing serious injury and damage. Always keep sparks and flames away from fuel.**
- **Fuel line spills and leaks are dangerous. Fuel can ignite and cause serious injuries or death and damage. Fuel can also irritate skin and eyes. To prevent this, always complete "BEFORE REPAIR PROCEDURE" and "AFTER REPAIR PROCEDURE" described in this manual.**
  - **☞ 01–14 BEFORE REPAIR PROCEDURE**
  - **☞ 01–14 AFTER REPAIR PROCEDURE**

STEP	INSPECTION		ACTION
1	CHECK FOR OTHER CONTINUOUS MEMORY DTC Check for other Continuous Memory DTCs which could cause Evaporative Emission Monitor DTC. • Key off. • NGS tester connected. • Key on, engine off. • Retrieve and record any Continuous Memory DTCs. • **Are there any other continuous Memory DTCs present?**	Yes	Go to appropriate DTC test. DISREGARD Evaporative Emission Monitor DTC at this time.
		No	Go to next step.
2	CHECK FOR KEY ON ENGINE OFF (KOEO) SELF TEST • Activate key on, engine off (KOEO) self test. • **Are any KOEO DTCs displayed?**	Yes	Go to appropriate DTC test.
		No	Go to next step.
3	CHECK FOR KEY ON ENGINE RUNNING (KOER) SELF TEST • Key on, engine running. • Warm up engine to normal operating temperature. • Activate key on, engine running (KOER) self test. • **Are any KOER DTCs displayed?**	Yes	Go to appropriate DTC test.
		No	Go to next step.
4	INSPECTION OF FUEL FILLER CAP • Key off. • Disconnect NGS tester. • Confirm filler cap is not either disconnected, loose or damaged. **Note** • When filler caps other than order entry system (OES) caps are attached, it is considered abnormal. • **Is fault detected?**	Yes	REPLACE or PROPERLY attach filler cap. RESET PCM to completely clear DTCs. ☞ After Repair Procedure COMPLETE OBD II Drive Mode. RERUN OBD Test.
		No	Go to next step.

STEP	INSPECTION		ACTION
5	INSPECTION OF VACUUM HOSES • Pull slightly on vacuum hoses at purge solenoid, catch tank and charcoal canister. • Check for loose connections. • Visually inspect for improperly connected and cracked hoses between dynamic chamber and purge solenoid, purge solenoid and catch tank, catch tank and charcoal canister. • Confirm air-tightness of vacuum hose by using vacuum pump. • **Is fault detected?**	Yes	SERVICE or REPLACE as necessary. RECONNECT all components. RESET PCM to completely clear DTCs. ☞ After Repair Procedure COMPLETE OBD II Drive Mode. RERUN OBD Test.
		No	RECONNECT all components. Go to next step.
6	CHECK FOR PURGE SOLENOID VALVE – VALVE STUCK CLOSED OR STUCK OPEN • Remove purge solenoid valve. • Confirm purge solenoid valve air vents properly when at ON and is air-tight when at OFF. • **Is fault detected?**	Yes	REPLACE purge solenoid valve. RECONNECT all components. RESET PCM to completely clear DTCs. ☞ After Repair Procedure COMPLETE OBD II Drive Mode. RERUN OBD Test.
		No	RECONNECT all components. Go to next step.
7	INSPECTION OF CATCH TANK • Remove catch tank. • Visually inspect for cracked catch tank. • Inspect catch tank for plugging by using vacuum pump. • **Is fault detected?**	Yes	REPLACE catch tank. RECONNECT all components. RESET PCM to completely clear DTCs. ☞ After Repair Procedure COMPLETE OBD II Drive Mode. RERUN OBD Test.
		No	RECONNECT all components. Go to next step.
8	INSPECTION OF CHARCOAL CANISTER • Remove charcoal canister. • Visually inspect for cracked charcoal canister. • Inspect charcoal canister for plugging by using vacuum pump. • **Is fault detected?**	Yes	REPLACE charcoal canister. RECONNECT all components. RESET PCM to completely clear DTCs. ☞ After Repair Procedure COMPLETE OBD II Drive Mode. RERUN OBD Test.
		No	RECONNECT all components. Go to next step.
9	VERIFY FUEL TANK PRESSURE (FTP) SIGNAL VOLTAGE • Clamp on hose on tank side of charcoal canister. • Remove filler cap. • Connect NGS tester. • Key on, engine off. • Access FTP V PID. • **Is FTP V PID values same as atmospheric pressure (approx. 2.5 V)?**	Yes	Install filler cap. Go to step 13.
		No	Install filler cap. Go to next step.
10	INDUCE OPPOSITE FTP SIGNAL • Key off. • Disconnect FTP sensor. • Connect jumper wire between sensor constant voltage circuit and FTP signal circuit at FTP sensor vehicle harness connector. • Key on, engine off. • If NGS tester communication concern exists, remove jumper immediately and go directly to next step. • Access FTP V PID. • **Is FTP V PID value between 4.0 and 6.0 volts?**	Yes	REPLACE damaged FTP sensor. RECONNECT all components. RESET PCM to completely clear DTCs. ☞ After Repair Procedure COMPLETE OBD II Drive Mode. RERUN OBD Test.
		No	REMOVE jumper. Go to next step.

STEP	INSPECTION		ACTION
11	CHECK CONSTANT VOLTAGE AT FTP SENSOR VEHICLE HARNESS CONNECTOR • FTP sensor disconnected. • Key on, engine off. • Measure voltage between constant voltage circuit and FTP sensor ground circuit at FTP sensor vehicle harness connector. • **Is constant voltage between 4.0 and 6.0 volts?**	Yes	Go to next step.
		No	Constant voltage is out of range. SERVICE or REPLACE constant voltage circuit. RECONNECT all components. RESET PCM to completely clear DTCs. ☞ After Repair Procedure COMPLETE OBD II Drive Mode. RERUN OBD Test.
12	CHECK FTP SIGNAL CIRCUIT FOR SHORTS TO FTP SENSOR GROUND AND GROUND CIRCUIT • Key off. • FTP sensor disconnected. • Disconnect PCM. Inspect for damaged or pushed out pins, corrosion and loose wires. Service as necessary. • Install breakout box. • Disconnect NGS tester from DLC. • Measure resistance between Test Pin 62 and Test Pin 91 at breakout box. • Measure resistance between Test Pin 62 and Test Pins 51 and 103 at breakout box. • **Is each resistance greater than 10,000 ohms?**	Yes	FTP sensor is shorted to FTP sensor ground or ground circuit in PCM. REPLACE PCM. REMOVE breakout box. RECONNECT all components. RESET PCM to completely clear DTCs. ☞ After Repair Procedure COMPLETE OBD II Drive Mode. RERUN OBD Test.
		No	SERVICE harness short between FTP sensor and ground. REMOVE breakout box. RECONNECT all components. RESET PCM to completely clear DTCs. ☞ After Repair Procedure COMPLETE OBD II Drive Mode. RERUN OBD Test.
13	CHECK FOR EVAPORATIVE EMISSION MONITOR SYSTEM • Key off. • Disconnect vacuum hose from charcoal canister at fuel tank side. • Attach vacuum pump to vacuum hose. • Connect NGS tester. • Key on, engine off. • Access FTP V PID with NGS tester. • Apply 17 kPa {13 mmHg, 0.5 inHg} vacuum by using vacuum pump, then leave it for one minute. • **Did FTP V PID value maintain negative pressure?**	Yes	DISCONNECT NGS tester. Go to step 18.
		No	DISCONNECT NGS tester. Go to next step.
14	INSPECTION OF VACUUM HOSES • Key off. • Pull slightly on vacuum hoses at pressure control valve, FTP sensor, fuel filler pipe and fuel tank. • Check for loose connections. • Visually inspect for wrongly connected and cracked hoses between fuel tank and FTP sensor, fuel tank and pressure control valve, fuel filler pipe and pressure control valve and pressure control valve and charcoal canister. • Confirm air-tightness of vacuum hose using vacuum pump. • **Is fault detected?**	Yes	SERVICE or REPLACE as necessary. RECONNECT all components. RESET PCM to completely clear DTCs. ☞ After Repair Procedure COMPLETE OBD II Drive Mode. RERUN OBD Test.
		No	RECONNECT all components. Go to next step.
15	CHECK FOR PRESSURE CONTROL VALVE • Remove and inspect pressure control valve. • **Is fault detected?**	Yes	REPLACE pressure control valve. RECONNECT all components. RESET PCM to completely clear DTCs. ☞ After Repair Procedure COMPLETE OBD II Drive Mode. RERUN OBD Test.
		No	RECONNECT all components. Go to next step.

STEP	INSPECTION		ACTION
16	INSPECTION FUEL FILLER PIPE • Remove fuel filler pipe and visually inspect fuel filler pipe for damage. • **Is fault detected?**	Yes	REPLACE fuel filler pipe. RECONNECT all components. RESET PCM to completely clear DTCs. ☞ After Repair Procedure COMPLETE OBD II Drive Mode. RERUN OBD Test.
		No	RECONNECT all components. Go to next step.
17	INSPECTION OF FUEL TANK • Remove fuel tank and visually inspect for damage. • Visually inspect for insufficient sealing or poorly attached accessories on fuel tank. (fuel gauge.) • **Is fault detected?**	Yes	SERVICE or REPLACE fuel tank or sealing. RECONNECT all components. RESET PCM to completely clear DTCs. ☞ After Repair Procedure COMPLETE OBD II Drive Mode. RERUN OBD Test.
		No	RECONNECT all components. Go to next step.
18	CHECK FOR CANISTER DRAIN CUT VALVE (CDCV) • Key off. • Remove CDCV. • Confirm CDCV is not damaged, and that air vents is tight when at ON. • **Is fault detected?**	Yes	REPLACE CDCV. RECONNECT all components. RESET PCM to completely clear DTCs. ☞ After Repair Procedure COMPLETE OBD II Drive Mode. RERUN OBD Test.
		No	Inspect and repair any detached, incorrectly installed or cracked hoses between charcoal canister to CDCV. RECONNECT all components. RESET PCM to completely clear DTCs. ☞ After Repair Procedure COMPLETE OBD II Drive Mode. RERUN OBD Test.

DTC P0443	Evaporative emission control system purge solenoid valve circuit malfunction
DESCRIPTION	• DTC P0443 indicates failure in purge solenoid valve circuit

[Possible Cause]
- Power circuit open
- Purge solenoid valve signal open in harness
- Purge solenoid valve signal circuit short to power ground
- Damaged purge solenoid valve
- Damaged PCM

STEP	INSPECTION		ACTION
1	CHECK PURGE SOLENOID VALVE POWER CIRCUIT **Note** • If DTC P0443 was generated in continuous memory only, go to step 5. • Key off. • Disconnect purge solenoid valve. • Key on, engine off. • Measure voltage between power circuit at purge solenoid valve vehicle harness connector and battery ground. • **Is voltage greater than 10.5 volts?**	Yes	Go to next step.
		No	SERVICE open in power circuit harness circuit. RECONNECT all components. VERIFY symptom no longer exists. RESET PCM to completely clear DTCs. ☞ After Repair Procedure COMPLETE OBD II Drive Mode. RERUN OBD Test.
2	CHECK PURGE SOLENOID VALVE RESISTANCE • Key off. • Purge solenoid valve disconnected. • Measure resistance between purge solenoid valve signal and power circuit circuits at purge solenoid valve. • **Is resistance between 27 and 35 ohms?**	Yes	Go to next step.
		No	REPLACE purge solenoid valve. VERIFY symptom no longer exists. RESET PCM to completely clear DTCs. ☞ After Repair Procedure COMPLETE OBD II Drive Mode. RERUN OBD Test.

STEP	INSPECTION		ACTION
3	CHECK CONTINUITY OF PURGE SOLENOID VALVE SIGNAL CIRCUIT • Key off. • Purge solenoid valve disconnected. • Disconnect PCM. Inspect for damaged or pushed out pins, corrosion, loose wires, etc. Service as necessary. • Install breakout box. Leave PCM disconnected. • Measure resistance between Test Pin 67 at breakout box and purge solenoid valve signal circuit at solenoid vehicle harness connector. • **Is resistance less than 5.0 ohms?**	Yes	Go to next step.
		No	SERVICE open in harness circuit. REMOVE breakout box. RECONNECT all components. VERIFY symptom no longer exists. RESET PCM to completely clear DTCs. ☞ After Repair Procedure COMPLETE OBD II Drive Mode. RERUN OBD Test.
4	CHECK PURGE SOLENOID VALVE SIGNAL CIRCUIT FOR SHORT GROUND CIRCUIT • Key off. • Purge solenoid valve disconnected. • Breakout box installed. • Disconnect NGS tester from DLC. • Measure resistance between Test Pin 67 and Test Pins 24 and 103 at breakout box. • **Is each resistance greater than 10,000 ohms?**	Yes	Go to next step.
		No	SERVICE harness short circuit. REMOVE breakout box. RECONNECT all components. VERIFY symptom no longer exists. RESET PCM to completely clear DTCs. ☞ After Repair Procedure COMPLETE OBD II Drive Mode. RERUN OBD Test.
5	COMPLETED KEY ON ENGINE OFF (KOEO) AND KEY ON ENGINE RUNNING (KOER) SELF TEST • **Was DTC P0443 generated in either KOEO or KOER self test?**	Yes	RETURN to step 1 and address cause of DTC.
		No	Go to next step.

6	CHECK FOR INTERMITTENT FAULT IN HARNESS AND CONNECTOR
	• Key off.
	• Disconnect PCM. Inspect for damaged or pushed out pins, corrosion, loose wires, etc.
	• Install breakout box.
	• Connect DVOM to Test Pin 67 and Test Pin 71 at breakout box.
	• Key on, engine off.
	• Observe DVOM display for an indication of fault (changing voltage) while performing following:
	  • Lightly tap on purge solenoid valve.
	  • Wiggle purge solenoid valve connector.
	  • Grasp purge solenoid valve vehicle harness connector and wiggle wires between solenoid and PCM.
	• **Is fault detected?**
		Yes	ISOLATE fault and SERVICE as necessary.
			REMOVE breakout box.
			RECONNECT all components.
			RERUN OBD Test.

		No	Unable to duplicate and/or identify fault at this time. Intermittent poor connection or component malfunction (Repair as necessary.). Go to ENGINE SYMPTOM TROUBLESHOOTING No.27.

DTC P0446	Evaporative emission control system vent control malfunction
DESCRIPTION	• DTC P0446 indicates excessive fuel tank pressure (FTP) or vent control malfunction in Evaporative Emission System

[Possible Cause]
- Damaged FTP sensor
- Kinks or blockage in fuel vapor hose/tube
- Constant voltage circuit to FTP sensor open
- Fuel vapor storage canister vent restriction
- Damaged Canister Vent side filter
- Damaged Canister Drain Cut Valve (CDCV)
- Damaged PCM

Warning
Following troubleshooting flow chart contains fuel system diagnosis and repair procedures. Read following warnings before performing fuel system service:
- **Fuel vapor is hazardous. It can easily ignite, causing serious injury and damage. Always keep sparks and flames away from fuel.**
- **Fuel line spills and leaks are dangerous. Fuel can ignite and cause serious injuries or death and damage. Fuel can also irritate skin and eyes. To prevent this, always complete "BEFORE REPAIR PROCEDURE" and "AFTER REPAIR PROCEDURE" described in this manual.**
  ☞ 01–14 BEFORE REPAIR PROCEDURE
  ☞ 01–14 AFTER REPAIR PROCEDURE

STEP	INSPECTION		ACTION
1	CHECK FTP SENSOR • Key on, engine off. **Note** • FTP V PID should read between 2.50 and 2.70 volts. Start engine if FTP V PID is equal to or less than 0.33 volt. • Access FTP V PID. • Key on, engine running. • Idle engine for 3 minutes. • Loosen fuel filler cap. • Again, access FTP V PID with NGS tester. • **Is FTP V PID voltage between 2.40 and 2.80 volts?**	Yes	INSTALL fuel filler cap only 1/8 turn so cap initially clicks by sound or touch. Go to step 3.
		No	INSTALL fuel filler cap only 1/8 turn so cap initially clicks by sound or touch. Go to next step.
2	CHECK CONSTANT VOLTAGE AT FTP SENSOR VEHICLE HARNESS CONNECTOR • Key off. • Disconnect FTP sensor vehicle harness connector. • Key on, engine off. • Measure voltage between constant voltage circuit and FTP sensor ground circuit at FTP sensor vehicle harness connector. • **Is constant voltage voltage between 4.0 and 6.0 volts?**	Yes	Constant voltage is open in FTP sensor. REPLACE FTP sensor. REMOVE breakout box. RECONNECT all components. RESET PCM to completely clear DTCs. ☞ After Repair Procedure COMPLETE OBD II Drive Mode. RERUN OBD Test.
		No	Constant voltage is out of range. SERVICE open or short in constant voltage circuit.

STEP	INSPECTION		ACTION
3	CHECK FOR RESTRICTION AT CHARCOAL CANISTER AND CDCV • Check for kinks or bends in fuel vapor hoses from fuel tank to in-line tee and from tee to both purge solenoid valve and charcoal canister. • Disconnect both ends of fuel vapor hose between charcoal canister and pressure control valve. • Check for vacuum bleed on disconnected fuel vapor hose with vacuum pump. Fuel vapor hose must not hold vacuum. • Check for excessive debris in charcoal canister or restrictions at charcoal canister atmosphere venting port to CDCV (most applications have CDCV directly attached to charcoal canister). • Check for kinks or bends in purge air inlet tube (larger diameter hose) between CDCV and atmosphere. • **Is an obstruction indicated?**	Yes	SERVICE as necessary. RECONNECT all components. RESET PCM to completely clear DTCs. ☞ After Repair Procedure COMPLETE OBD II Drive Mode. RERUN OBD Test.
		No	Go to next step.
4	CHECK TUBE FROM CANISTER DRAIN CUT VALVE (CDCV) FILTER PORT TO ATMOSPHERE • Disconnect vacuum hose to atmosphere at CDCV. • Install a hand-held vacuum pump to CDCV side of vacuum hose. • Apply vaccum to vacuum hose. • **Does air flow?**	Yes	RECONNECT all components. Go to step 7.
		No	Go to next step.
5	INSPECTION OF CHECK VALVE • Remove and inspect check valve for plugging. • **Is the fault detected?**	Yes	REPLACE the check valve. RECONNECT all components. RESET PCM to completely clear DTCs. ☞ After Repair Procedure COMPLETE OBD II Drive Mode. RERUN OBD Test.
		No	Go to next step.
6	INSPECTION OF AIR FILTER • Remove and inspect air filter for plugging. • **Is fault detected?**	Yes	REPLACE air filter. RECONNECT all components. RESET PCM to completely clear DTCs. ☞ After Repair Procedure COMPLETE OBD II Drive Mode. RERUN OBD Test.
		No	REPLACE the vacuum hose. RECONNECT all components. RESET PCM to completely clear DTCs. ☞ After Repair Procedure COMPLETE OBD II Drive Mode. RERUN OBD Test.
7	CHECK CDCV MECHANICAL OPERATION OPEN VACUUM POSITION • Key off. • Disconnect vacuum hose at both ends of CDCV. • If CDCV is directly attached to charcoal canister, disconnect fuel vapor hose from purge solenoid valve to charcoal canister at charcoal canister. • Install hand-held vacuum pump to vent to atmosphere side of CDCV. • CDCV electrically connected. • Apply –53 kPa {–0.53 kgf/cm^2, –16 inHg} of vacuum to CDCV. • **Does CDCV hold vacuum for one minute?**	Yes	REMOVE vacuum pump. REPLACE CDCV. RECONNECT all components. RESET PCM to completely clear DTCs. ☞ After Repair Procedure COMPLETE OBD II Drive Mode. RERUN OBD Test.
		No	RECONNECT all components. Go to next step.

STEP	INSPECTION		ACTION
8	CHECK CDCV RESISTANCE • Key off. • Disconnect CDCV vehicle harness connector. • Measure resistance between CDCV teminals. • **Is resistance less than 45 ohms?**	Yes	CDCV is shorted to ground in CDCV. REPLACE CDCV. RECONNECT all components. RESET PCM to completely clear DTCs. ☞ After Repair Procedure COMPLETE OBD II Drive Mode. RERUN OBD Test.
		No	Go to next step.
9	CHECK CDCV SIGNAL CIRCUIT FOR SHORT TO GROUND CIRCUIT • Key off. • CDCV disconnected. • Disconnect PCM. Inspect for damaged or pushed out pins, corrosion and loose wires. Service as necessary. • Install breakout box. Leave PCM disconnected. • Disconnect NGS tester from DLC. • Measure resistance between Test Pin 18 and Test Pins 51 and 103 at breakout box. • **Is each resistance greater than 10,000 ohms?**	Yes	Go to next step.
		No	SERVICE harness short between CDCV and ground circuit. REMOVE breakout box. RECONNECT all components. RESET PCM to completely clear DTCs. ☞ After Repair Procedure COMPLETE OBD II Drive Mode. RERUN OBD Test.
10	INSPECTION OF FUEL TANK • Remove and inspect fuel tank. • **Is fault detected?**	Yes	SERVICE or REPLACE fuel tank or sealing. RECONNECT all components. RESET PCM to completely clear DTCs. ☞ After Repair Procedure COMPLETE OBD II Drive Mode. RERUN OBD Test.
		No	UNABLE to duplicate or identify fault at time. Go to ENGINE SYMPTOM TROUBLESHOOTING No.30.

DTC P0452	Evaporative emission control system fuel tank pressure sensor circuit low input
DESCRIPTION	• Diagnostic trouble code P0452 indicates that Fuel Tank Pressure (FTP) sensor input signal is below minimum.

[Possible Cause]

- FTP sensor completely submerged in liquid fuel
- Inside contamination of FTP sensor connector
- Ground circuit short circuit
- FTP sensor ground short circuit
- Damaged FTP sensor
- Damaged PCM

STEP	INSPECTION		ACTION
1	CHECK FOR FUEL SATURATION OF FTP SENSOR • Key off. • Visually check for liquid fuel contamination of FTP sensor electrical connector. • Check for completely submerged FTP sensor in liquid fuel (can affect correct FTP voltage reading). • **Does FTP sensor and/or connector show signs of fuel contamination?**	Yes	SERVICE FTP sensor electrical connector as necessary. If FTP sensor is completely submerged in fuel, DRAIN fuel tank and REFILL to proper fuel level. RESET PCM to completely clear DTCs. ☞ After Repair Procedure COMPLETE OBD II Drive Mode. RERUN OBD Test.
		No	INSTALL original FTP sensor in fuel tank. Go to step 6 and RETURN to Pinpoint Test Step that directed you here. Go to next step.
2	VERIFY FTP SIGNAL VOLTAGE • Key on, engine off. **Note** • FTP sensor input with no pressure/vacuum on fuel tank (filler cap open or not open to atmosphere) is 2.37—2.87 volts. Access FTP V PID with NGS tester. • **Is FTP V PID voltage less than 0.22 volt?**	Yes	FTP sensor voltage less than acceptable minimum. Go to next step.
		No	Fault that produced DTC P0452 is intermittent. Perform Wiggle/Tap test.

STEP	INSPECTION		ACTION
3	INDUCE OPPOSITE FTP SIGNAL • Key off. • Disconnect FTP sensor vehicle harness connector. • Connect jumper wire between sensor constant voltage circuit and FTP signal circuit at FTP sensor vehicle harness connector. • Key on, engine off. • If NGS tester communication concern exists, remove jumper immediately and go directly to next step. • Access FTP V PID with NGS tester. • **Is constant voltage between 4.0 and 6.0 volts?**	Yes	REPLACE damaged FTP sensor. ☞ 01–16 EMISSION SYSTEM (FUEL TANK SIDE COMPONENT) REMOVAL/INSTALLATION. RECONNECT all components. RECORD and REMEMBER this Pinpoint Test Step go to step 6, then RETURN to Pinpoint Test Step that directed you here. RESET PCM to completely clear DTCs. ☞ After Repair Procedure COMPLETE OBD II Drive Mode. RERUN OBD Test.
		No	REMOVE jumper wire. Go to next step.
4	CHECK CONSTANT VOLTAGE AT FTP SENSOR VEHICLE HARNESS CONNECTOR • FTP sensor disconnected. • Key on, engine off. • Measure voltage between constant voltage circuit and FTP sensor ground circuit at FTP sensor vehicle harness connector. • **Is constant voltage between 4.0 and 6.0 volts?**	Yes	Go to next step.
		No	Constant voltage is out of range.
5	CHECK FTP SIGNAL CIRCUIT FOR SHORTS TO FTP SENSOR GROUND AND GROUND CIRCUIT • Key off. • FTP sensor disconnected. • Disconnect PCM. Inspect for damaged or pushed out pins, correction and loose wires. Service as necessary. • Install breakout box. Leave PCM disconnected. • Disconnect NGS tester from DLC. • Measure resistance between Test Pin 62 and Test Pin 91 at breakout box. • Measure resistance between Test Pin 62 and Test Pins 51 and 103 at breakout box. • **Is each resistance greater than 10,000 ohms?**	Yes	FTP is shorted to FTP sensor ground or ground circuit in PCM. REPLACE PCM. REMOVE breakout box. RECONNECT all components. RERUN OBD Test.
		No	SERVICE harness short between FTP signal circuit and FTP sensor ground or ground circuit. REMOVE breakout box. RECONNECT all components. RESET PCM to completely clear DTCs. ☞ After Repair Procedure COMPLETE OBD II Drive Mode. RERUN OBD Test.
6	EVAPORATIVE SYSTEM RE-CHECK • RESET PCM to completely clear DTCs. ☞ After Repair Procedure • COMPLETE OBD II Drive Mode. • **Is MIL ON?**	Yes	ISOLATE pressure leak in evaporative emission system (vacuum/fuel vapor hose connections, cracked/split hoses, damaged components. SERVICE as necessary. VERIFY symptom no longer exists. RESET PCM to completely clear DTCs. ☞ After Repair Procedure COMPLETE OBD II Drive Mode. RERUN OBD Test.
		No	If detected here from previous step, return to that step and continue step. RETURN to Action to Take column of Pinpoint Test Step that directed you here.

DTC P0453	Evaporative emission control system fuel tank pressure sensor circuit high input
DESCRIPTION	• DTC P0453 indicates Fuel Tank Pressure (FTP) signal circuit input above maximum.

[Possible Cause]
- FTP signal circuit open
- FTP signal circuit shorted to constant voltage or power circuit
- Constant voltage shorted to power circuit
- FTP sensor ground open
- Damaged FTP sensor
- Damaged PCM

STEP	INSPECTION		ACTION
1	VERIFY FTP SIGNAL VOLTAGE • Key on, engine off. **Note** • FTP sensor input with no pressure/vacuum on fuel tank (fuel filler cap open or not open to atmosphere) is 2.37—2.87 volts. • Access FTP V PID with NGS tester. • **Is FTP V PID voltage greater than 4.50 volts?**	Yes	FTP signal circuit voltage is greater than acceptable maximum. Go to next step.
		No	Fault that produced DTC P0453 is intermittent. Perform Wiggle/tap test.
2	CHECK FTP AT FTP SENSOR FOR SHORT TO POWER CIRCUIT • Key off. • Disconnect FTP sensor vehicle harness connector. • Key on, engine off. • Measure voltage between FTP signal circuit at FTP sensor vehicle harness connector and battery ground. • **Is voltage greater than 10.5 volts?**	Yes	FTP is indicating short to power circuit. Go to next step.
		No	Go to step 4.
3	CHECK FTP SIGNAL CIRCUIT FOR SHORT TO POWER CIRCUIT • Key off. • FTP sensor disconnected. • Disconnect PCM. Inspect for damaged or pushed out pins, corrosion and loose wires. Service as necessary. • Install breakout box. Leave PCM disconnected. • Key on, engine off. • Measure voltage between Test Pin 62 and Test Pins 51 and 103 at breakout box. • **Is voltage greater than 10.5 volts?**	Yes	SERVICE harness short between FTP and power circuit. REMOVE breakout box. RECONNECT all components. RESET PCM to completely clear DTCs. ☞ After Repair Procedure COMPLETE OBD II Drive Mode. RERUN OBD Test.
		No	FTP is shorted to power circuit in PCM. REPLACE damaged PCM. REMOVE breakout box. RECONNECT all components. RERUN OBD Test.
4	INDUCE OPPOSITE SIGNAL • Key off. • FTP sensor disconnected. • Connect jumper wire between FTP sensor ground circuit and FTP circuit at FTP sensor vehicle harness connector. • Key on, engine off. • If NGS tester communication concern exists, remove jumper immediately and check FTP signal circuit short to constant voltage in PCM or harness. • Access FTP V PID with NGS tester. • **Is FTP V PID voltage less than 0.10 volt?**	Yes	REMOVE jumper. Go to next step.
		No	Unable to induce opposite signal.
5	VERIFY THAT CONSTANT VOLTAGE IS IN RANGE • FTP sensor disconnected. • Key on, engine off. • Measure voltage between power circuit and FTP sensor ground circuit at FTP sensor vehicle harness connector. • **Is constant voltage between 4.0 and 6.0 volts?**	Yes	Go to next step.
		No	Constant voltage is out of range.

STEP	INSPECTION		ACTION
6	CHECK FTP SIGNAL CIRCUIT FOR SHORT TO CONSTANT VOLTAGE CIRCUIT IN SENSOR OR HARNESS • Key off. • FTP sensor disconnected. • Disconnected PCM. Inspect for damaged or pushed out pins, corrosion and loose wires. Service as necessary. • Install breakout box, leave PCM disconnected. • Measure resistance between Test Pin 62 and Test Pin 90 at breakout box. • **Is resistance greater that 10,000 ohms?**	Yes	FTP sensor ground in FTP sensor or FTP signal circuit is shorted to constant voltage circuit in FTP sensor. REPLACE damaged FTP sensor. REMOVE breakout box. RECONNECT all components. RECORD and REMEMBER this Pinpoint Test Step Go to next step then RETURN to Pinpoint Test Step that directed you here. RESET PCM to completely clear DTCs. ☞ After Repair Procedure COMPLETE OBD II Drive Mode. RERUN OBD Test.
		No	SERVICE harness short between FTP signal and constant voltage. REMOVE breakout box. RECONNECT all components. RESET PCM to completely clear DTCs. ☞ After Repair Procedure COMPLETE OBD II Drive Mode. RERUN OBD Test.
7	EVAPORATIVE SYSTEM RE-CHECK • RESET PCM to completely clear DTCs. ☞ After Repair Procedure • COMPLETE OBD II Drive Mode. • **Is MIL illuminated?**	Yes	ISOLATE pressure leak in evaporative emission system (vacuum/fuel vapor hose connections, cracked/split hoses, damaged components. SERVICE as necessary. VERIFY symptom no longer exists. RESET PCM to completely clear DTCs. ☞ After Repair Procedure COMPLETE OBD II Drive Mode. RERUN OBD Test.
		No	RETURN to Action to Take column of Pinpoint Test Step that directed you here.

DTC P0455	Evaporative emission control system leak detected (Gross leak)
DESCRIPTION	• DTC P0455 indicates substantial leak or blockage has been detected in Evaporative Emission System.

[Possible Cause]

- Purge solenoid valve malfunction
- CDCV malfunction
- Loose fuel filler cap
- Charcoal canister malfunction
- Catch tank malfunction
- Pressure control valve malfunction
- Cracked fuel tank
- Fuel tank component parts poorly installed
- Evaporative hose damaged or loose
- Insufficient manifold absolute pressure
- Barometric absolute pressure sensor malfunction
- Fuel tank level sensor malfunction
- Fuel tank pressure sensor malfunction
- Engine coolant temperature sensor malfunction
- Intake air temperature sensor malfunction
- Throttle position sensor malfunction
- Mass air flow sensor malfunction
- Vehicle speed sensor malfunction
- Poor connection of connector

Warning

Following troubleshooting flow chart contains fuel system diagnosis and repair procedures. Read following warnings before performing fuel system service:

- **Fuel vapor is hazardous. It can easily ignite, causing serious injury and damage. Always keep sparks and flames away from fuel.**
- **Fuel line spills and leaks are dangerous. Fuel can ignite and cause serious injuries or death and damage. Fuel can also irritate skin and eyes. To prevent this, always complete "BEFORE REPAIR PROCEDURE" and "AFTER REPAIR PROCEDURE" described in this manual.**
  - **☞ 01–14 BEFORE REPAIR PROCEDURE**
  - **☞ 01–14 AFTER REPAIR PROCEDURE**

STEP	INSPECTION		ACTION
1	CHECK FOR OTHER CONTINUOUS MEMORY DTC Check for other Continuous Memory DTCs which could cause this DTC. • Key off. • NGS tester connected. • Key on, engine off. • Retrieve and record any Continuous Memory DTCs. • **Are there any other continuous Memory DTCs present?**	Yes	DISREGARD Evaporative Emission Monitor DTC at this time. Go to appropriate DTC test.
		No	Go to next step.
2	CHECK FOR KEY ON ENGINE OFF (KOEO) SELF TEST • Activate key on, engine off (KOEO) self test. • **Are any Key On Engine Off DTCs displayed?**	Yes	Go to DTC charts and PROCEED as required.
		No	Go to next step.
3	CHECK FOR KEY ON ENGINE RUNNING (KOER) SELF TEST • Key on, engine running. • Warm up engine to normal operating temperature. • Activate key on, engine running (KOER) self test. • **Are any key On Engine Running DTCs displayed?**	Yes	Go to DTC charts and PROCEED as required.
		No	Go to next step.
4	CHECK FOR INTAKE MANIFOLD VACUUM • Key off. • Attach vacuum gauge to intake manifold vacuum source beside purge control system. • Key on, engine running. • Warm up engine to normal operating temperature. • Measure intake manifold vacuum. • **Did manifold vacuum rise above 54 kPa {407 mmHg, 16 inHg}.**	Yes	DISCONNECT vacuum gauge. RECONNECT all components. Go to next step.
		No	INSPECT and SERVICE troubles on air intake and engine. RECONNECT all components. RESET PCM to completely clear DTCs. ☞ After Repair Procedure COMPLETE OBD II Drive Mode. RERUN OBD Test.

STEP	INSPECTION		ACTION
5	INSPECTION OF FUEL FILLER CAP • Key off. • Disconnect NGS tester. • Confirm filler cap is not either disconnected, loose or damaged. **Note** • It is considered abnormal when filler caps other than order entry system (OES) caps are attached. • **Is fault detected?**	Yes	REPLACE or PROPERLY attach filler cap. RESET PCM to completely clear DTCs. ☞ After Repair Procedure COMPLETE OBD II Drive Mode. RERUN OBD Test.
		No	Go to next step.
6	INSPECTION OF VACUUM HOSES • Pull slightly on vacuum hoses at purge solenoid, catch tank and charcoal canister. • Check for loose connections. • Visually inspect for impropely connection and cracked hoses between dynamic chamber and purge solenoid, purge solenoid and catch tank, catch tank and charcoal canister. • Confirm air tightness of vacuum hose by using vacuum pump. • **Is fault detected?**	Yes	SERVICE or REPLACE as necessary. RECONNECT all components. RESET PCM to completely clear DTCs. ☞ After Repair Procedure COMPLETE OBD II Drive Mode. RERUN OBD Test.
		No	RECONNECT all components. Go to next step.
7	CHECK FOR PURGE SOLENOID VALVE – VALVE STUCK CLOSED OR STUCK OPEN • Remove purge solenoid valve. • Confirm purge solenoid is vents air properly when at ON and is air tight when at OFF. • **Is fault detected?**	Yes	REPLACE purge solenoid valve. RECONNECT all components. RESET PCM to completely clear DTCs. ☞ After Repair Procedure COMPLETE OBD II Drive Mode. RERUN OBD Test.
		No	RECONNECT all components. Go to next step.
8	INSPECTION OF CATCH TANK • Remove catch tank. • Visually inspect for cracked catch tank. • Inspect catch tank for plugging by using vacuum pump. • **Is fault detected?**	Yes	REPLACE catch tank. RECONNECT all components. RESET PCM to completely clear DTCs. ☞ After Repair Procedure COMPLETE OBD II Drive Mode. RERUN OBD Test.
		No	RECONNECT all components. Go to next step.
9	CHECK FOR INTAKE MANIFOLD VACUUM TO PURGE CONTROL SYSTEM • Key off. • Attach vacuum gauge to intake manifold vacuum source for purge control system. • Key on, engine running. • Warm up engine to normal operating temperature. • Measure intake manifold vacuum. • **Did manifold vacuum rise above 54 kPa {407 mmHg, 16 inHg}.**	Yes	DISCONNECT vacuum gauge. RECONNECT all components. Go to next step.
		No	INSPECT and SERVICE plugging, cracking, or damages on dynamic chamber vacuum passage. RECONNECT all components. RESET PCM to completely clear DTCs. ☞ After Repair Procedure COMPLETE OBD II Drive Mode. RERUN OBD Test.
10	INSPECTION OF CHARCOAL CANISTER • Remove charcoal canister. • Visually inspect for cracked charcoal canister. • Inspect charcoal canister for plugging by using vacuum pump. • **Is fault detected?**	Yes	REPLACE charcoal canister. RECONNECT all components. RESET PCM to completely clear DTCs. ☞ After Repair Procedure COMPLETE OBD II Drive Mode. RERUN OBD Test.
		No	RECONNECT all components. Go to next step.

STEP	INSPECTION		ACTION
11	VERIFY FTP SIGNAL VOLTAGE • Clamp on hose on tank side of charcoal canister. • Remove filler cap. • Connect NGS tester. • Key on, engine off. • Access FTP V PID with NGS tester. • **Are FTP V PID values same as atmospheric pressure (approx. 2.5 V)?**	Yes	Install filler cap. Go to step 15.
		No	Install filler cap. Go to next step.
12	INDUCE OPPOSITE FTP SIGNAL • Key off. • Disconnect FTP sensor vehicle harness connector. • Connect jumper at constant voltage circuit between FTP sensor and sensor vehicle harness connector. • Key on, engine off. • If NGS tester communication concern exists, remove jumper immediately and go directly to next step. • Access FTP V PID. • **Is FTP V PID value between 4.0 and 6.0 volts?**	Yes	REPLACE damaged FTP sensor. RECONNECT all components. RESET PCM to completely clear DTCs. ☞ After Repair Procedure COMPLETE OBD II Drive Mode. RERUN OBD Test.
		No	REMOVE jumper. Go to next step.
13	CHECK VREF AT FTP SENSOR VEHICLE HARNESS CONNECTOR • FTP sensor disconnected. • Key on, engine off. • Measure voltage between constant voltage circuit and FTP sensor ground circuit at FTP sensor vehicle harness connector. • **Is constant voltage between 4.0 and 6.0 volts?**	Yes	Go to next step.
		No	Constant voltage is out of range. SERVICE or REPLACE constant voltage circuit. RECONNECT all components. RESET PCM to completely clear DTCs. ☞ After Repair Procedure COMPLETE OBD II Drive Mode. RERUN OBD Test.
14	CHECK FTP SIGNAL CIRCUIT FOR SHORTS TO FTP SENSOR GROUND AND GROUND CIRCUIT • Key off. • Disconnect FTP sensor. • Disconnect PCM. Inspect for damaged or pushed out pins, corrosion and loose wires. Service as necessary. • Install breakout box. Leave PCM disconnected. • Disconnect NGS tester from DLC. • Measure resistance between Test Pin 62 and Test Pin 91 at breakout box. • Measure resistance between Test Pin 62 and Test Pins 51 and 103 at breakout box. • **Is each resistance greater than 10,000 ohms?**	Yes	FTP is shorted to FTP sensor ground or ground circuit in PCM. REPLACE PCM. REMOVE breakout box. RECONNECT all components. RESET PCM to completely clear DTCs. ☞ After Repair Procedure COMPLETE OBD II Drive Mode. RERUN OBD Test.
		No	SERVICE harness short between FTP signal and FTP sensor ground or ground circuit. REMOVE breakout box. RECONNECT all components. RESET PCM to completely clear DTCs. ☞ After Repair Procedure COMPLETE OBD II Drive Mode. RERUN OBD Test.
15	CHECK FOR EVAPORATIVE EMISSION MONITOR SYSTEM • Key off. • Disconnect vacuum hose from charcoal canister at fuel tank side. • Attach vacuum pump to vacuum hose. • Connect NGS tester. • Key on, engine off. • Access FTP V PID. • Apply vacuum by using vacuum pump. • **Does FTP V PID values change on negative pressure side?** ☞ 01–40 FUEL TANK PRESSURE SENSOR INSPECTION	Yes	DISCONNECT NGS tester. Go to step 20.
		No	DISCONNECT NGS tester. Go to next step.

STEP	INSPECTION		ACTION
16	INSPECTION OF VACUUM HOSES • Key off. • Pull slightly on vacuum hoses at pressure control valve, FTP sensor, fuel filler pipe and fuel tank. • Check for loose connections. • Visually inspect for improperly connections and cracked hoses between fuel tank and FTP sensor, fuel tank and pressure control valve, fuel filler pipe and pressure control valve and pressure control valve and charcoal canister. • Confirm air tightness of vacuum hose using vacuum pump. • **Is fault detected?**	Yes	SERVICE or REPLACE as necessary. RECONNECT all components. RESET PCM to completely clear DTCs. ☞ After Repair Procedure COMPLETE OBD II Drive Mode. RERUN OBD Test.
		No	RECONNECT all components. Go to next step.
17	CHECK FOR PRESSURE CONTROL VALVE • Remove and inspect pressure control valve. • **Is fault detected?**	Yes	REPLACE pressure control valve. RECONNECT all components. RESET PCM to completely clear DTCs. ☞ After Repair Procedure COMPLETE OBD II Drive Mode. RERUN OBD Test.
		No	RECONNECT all components. Go to next step.
18	INSPECTION FUEL FILLER PIPE • Remove fuel filler pipe. • Visually inspect for fuel filler pipe damage. • **Is fault detected?**	Yes	REPLACE fuel filler pipe. RECONNECT all components. RESET PCM to completely clear DTCs. ☞ After Repair Procedure COMPLETE OBD II Drive Mode. RERUN OBD Test.
		No	RECONNECT all components. Go to next step.
19	INSPECTION OF FUEL TANK • Remove fuel tank. • Visually inspect for fuel tank damage. • Visually inspect for insufficient sealing or poorly attached accessories on fuel tank: i.e., fuel gauge. • **Is fault detected?**	Yes	SERVICE or REPLACE fuel tank or sealing. RECONNECT all components. RESET PCM to completely clear DTCs. ☞ After Repair Procedure COMPLETE OBD II Drive Mode. RERUN OBD Test.
		No	RECONNECT all components. Go to next step.
20	CHECK FOR EVAPORATIVE EMISSION MONITOR SYSTEM • Key off. • Disconnect vacuum hose from charcoal canister at fuel tank side. • Attach vacuum pump to vacuum hose. • Connect NGS tester. • Key on, engine off. • Access FTP V PID. • Apply 17 kPa {13 mmHg, 0.5 inHg} vacuum by using vacuum pump, then leave it for one minute. • **Does FTP V PID values maintained negative pressure?**	Yes	DISCONNECT NGS tester. Go to step 25.
		No	DISCONNECT NGS tester. Go to next step.

STEP	INSPECTION		ACTION
21	INSPECTION OF VACUUM HOSES • Key off. • Pull slightly on vacuum hoses at pressure control valve, FTP sensor, fuel filler pipe and fuel tank. • Check for loose connections. • Visually inspect for improperly connections and cracked hoses between fuel tank and FTP sensor, fuel tank and pressure control valve, fuel filler pipe and pressure control valve, pressure control valve and charcoal canister. • Confirm air tightness of vacuum hose using vacuum pump. • **Is fault detected?**	Yes	SERVICE or REPLACE as necessary. RECONNECT all components. RESET PCM to completely clear DTCs. ☞ After Repair Procedure COMPLETE OBD II Drive Mode. RERUN OBD Test.
		No	RECONNECT all components. Go to next step.
22	CHECK FOR PRESSURE CONTROL VALVE • Remove and inspect pressure control valve. • **Is fault detected?**	Yes	REPLACE pressure control valve. RECONNECT all components. RESET PCM to completely clear DTCs. ☞ After Repair Procedure COMPLETE OBD II Drive Mode. RERUN OBD Test.
		No	RECONNECT all components. Go to next step.
23	INSPECTION FUEL FILLER PIPE • Remove fuel filler pipe. • Visually inspect for fuel filler pipe damage. • **Is fault detected?**	Yes	REPLACE fuel filler pipe. RECONNECT all components. RESET PCM to completely clear DTCs. ☞ After Repair Procedure COMPLETE OBD II Drive Mode. RERUN OBD Test.
		No	RECONNECT all components. Go to next step.
24	CHECK CANISTER DRAIN CUT VALVE (CDCV) • Key off. • Remove CDCV. • Confirm CDCV is not damaged, and that air vents are tight when at ON. • **Is fault detected?**	Yes	REPLACE CDCV. RECONNECT all components. RESET PCM to completely clear DTCs. ☞ After Repair Procedure COMPLETE OBD II Drive Mode. RERUN OBD Test.
		No	Inspect and repair any detached, incorrectly installed or cracked hoses between charcoal canister and CDCV. RECONNECT all components. RESET PCM to completely clear DTCs. ☞ After Repair Procedure COMPLETE OBD II Drive Mode. RERUN OBD Test.

DTC P0460	Fuel gauge sender unit circuit malfunction (Open/short and functional)
DESCRIPTION	• Diagnostic trouble code (DTC) P0460 indicates fuel level input circuit malfunction due to low or high fuel level input circuit input to PCM or mechanically stuck fuel pump

[Possible Cause]

- Empty fuel tank
- Overfilled fuel tank
- Fuel pump mechanically stuck open
- Fuel pump mechanically stuck closed
- Incorrect fuel gauge
- Damaged fuel gauge or instrument cluster
- Fuel level input circuit open
- Fuel level input circuit shorted to ground circuit
- Fuel level input shorted to power circuit
- Damaged PCM

Warning

Following troubleshooting flow chart contains fuel system diagnosis and repair procedures. Read following warnings before performing fuel system service:

- **Fuel vapor is hazardous. It can easily ignite, causing serious injury and damage. Always keep sparks and flames away from fuel.**
- **Fuel line spills and leaks are dangerous. Fuel can ignite and cause serious injuries or death and damage. Fuel can also irritate skin and eyes. To prevent this, always complete "BEFORE REPAIR PROCEDURE" and "AFTER REPAIR PROCEDURE" described in this manual.**
  - **☞ 01–14 BEFORE REPAIR PROCEDURE**
  - **☞ 01–14 AFTER REPAIR PROCEDURE**

STEP	INSPECTION		ACTION
1	VERIFICATION OF FUEL TANK LEVEL • Key on, engine off. • Record vehicle fuel gauge reading. • If during initial 30 seconds of both readings, fuel gauge is between one quarter and three quarters filled but fuel level input PID indicates reading much higher or lower reading (approximately 100% or 0%), check fuel pump resistance. Access fuel level input PID with NGS tester. • **Is fuel level in fuel tank between one quarter (25% on FLI PID) and three quarters (75% on FLI PID) filled?**	Yes	Go to next step.
		No	INSPECT fuel tanks for leaks. SERVICE as necessary. EVALUATE fuel tank for overfilled condition (greater than 75%). ADD fuel tank for under filled condition (less than 25%). RERUN OBD Test. Go to next step.
2	CHECK FUEL LEVEL INPUT VOLTAGE ON NGS TESTER • Key on, engine off. • Access FLI PID with. • **Is FLI PID within specified valve?**	Yes	CHECK for mechanically stuck fuel pump.
		No	Go to next step.
3	COMPARE FUEL LEVEL INPUT CIRCUIT VOLTAGE CHECK AT BREAKOUT BOX AND NGS TESTER • Key off. • Disconnect PCM. Inspect for damaged or pushed out pins. Corrosion and loose wires. Service as necessary. • Install breakout box. Connect PCM to breakout box. • Key on, engine off. • Measure voltage between Test Pin 63 and Test Pin 91 at breakout box. • **Are both voltage readings at breakout box and NGS tester between 1.24 and 2.90 volts?**	Yes	Go to next step.
		No	**For either voltage reading greater than 10 volts:** CHECK for installation of proper fuel gauge at instrument cluster. REPLACE fuel gauge when necessary. RERUN Pinpoint test step 3. **For either voltage reading greater than 2.90 volts or less than 1.24 volts:** REMOVE breakout box. REPLACE PCM. RERUN OBD test. **For both voltage readings greater than 2.90 volts or less than 1.24 volts:** Check fuel pump resistance.

DTC P0500	Vehicle speed sensor (VSS) malfunction
DESCRIPTION	• DTC P0500 indicates VSS input signal has been detected out of Self-Test range

[Possible Cause]
- Damaged VSS
- Damaged PCM
- Open in VSS (+)/VSS (–) harness circuit
- Short to GND in VSS (+)/VSS (–) harness circuit
- Short to power circuit

STEP	INSPECTION		ACTION
1	CHECK CONTINUITY OF VSS HARNESS CIRCUIT • Key off. • Disconnect PCM. Inspect for damaged or pushed out pins, corrosion, loose wires, etc. Service as necessary. • Install breakout box. PCM disconnected. • Disconnect VSS. • Measure resistance between Test Pin 58 at breakout box and VSS (+) circuit at VSS connector. • Measure resistance between Test Pin 33 at breakout box VSS (–) circuit at VSS vehicle harness connector. • **Is each resistance less than 5.0 ohms?**	Yes	Go to next step.
		No	SERVICE open in harness circuit. REMOVE breakout box. RECONNECT all components. RESET PCM to completely clear DTCs. ☞ After Repair Procedure COMPLETE OBD II Drive Mode. RUN VSS Drive mode to verify repair.
2	CHECK VSS HARNESS CIRCUITS FOR SHORTS TO VSS GROUND AND GROUND CIRCUIT • Key off. • VSS disconnected. • Breakout box installed. PCM disconnected. • Measure resistance between Test Pin 58 and Test Pins 51, 103, 33, 91 and 71 at breakout box. • Measure resistance between Test Pins 33 and 71 at breakout box. • **Is each resistance greater than 500 ohms?**	Yes	Go to next step.
		No	SERVICE short circuit. REMOVE breakout box. RECONNECT all components. RESET PCM to completely clear DTCs. ☞ After Repair Procedure COMPLETE OBD II Drive Mode. RUN VSS Drive mode verify repair.
3	CHECK VSS RESISTANCE • Key off. • VSS disconnected. • Measure VSS resistance. • **Is resistance between 190 and 250 ohms?**	Yes	REMOVE breakout box. REPLACE PCM. RECONNECT VSS. RUN VSS Drive cycle verify repair.
		No	REPLACE VSS. REMOVE breakout box. RECONNECT PCM. RUN VSS Drive mode verify repair.

DTC	P0505 P1504 P1507	**Idle air control (IAC) system malfunction** **Idle air control (IAC) valve circuit malfunction** **Idle air control (IAC) system underspeed error**
DESCRIPTION		• DTC P0505 indicates that Self-Test has detected an IAC system malfunction • DTC P1504 indicates that Self-Test has detected an IAC valve circuit malfunction • DTC P1507 indicates that Self-Test has detected an IAC valve underspeed error

[Possible Cause]
- IAC valve signal circuit open
- IAC valve signal circuit shorted to power circuit
- IAC valve signal short to ground (P1504)
- IAC valve power circuit open
- Air inlet plugged (P0505, P1507)
- Air inlet leakage (P1507)
- Damaged IAC valve component
- Damaged throttle body (P0505, P1507)
- Damaged PCM

STEP	INSPECTION		ACTION
1	CHECK POWER CIRCUIT TO IAC VALVE • Key off. • Disconnect IAC valve vehicle harness connector. • Key on. • Measure voltage between power circuit at IAC valve vehicle harness connector and battery ground. • **Is voltage greater than 10.5 volts?**	Yes	Go to next step.
		No	SERVICE open in power circuit to IAC valve. RECONNECT all components. RERUN OBD Test.
2	CHECK IAC VALVE RESISTANCE • Key off. • IAC valve vehicle harness connector disconnected. • Measure solenoid resistance. **Note** • Due to diode in solenoid, place DVOM (+) lead on power circuit pin and (–) lead on IAC valve pin. • **Is resistance between 6.0 and 13.0 ohms?**	Yes	Go to next step.
		No	REPLACE IAC valve component. RECONNECT all components. RERUN OBD Test.
3	CHECK IAC VALVE FOR AN INTERNAL SHORT TO IAC VALVE CASE • Key off. • IAC valve vehicle harness connector disconnected. • Measure resistance from either IAC valve pin to IAC valve component case. • **Is resistance greater than 10,000 ohms?**	Yes	**For DTC P1504:** Go to Step 6. **All other:** Go to next step.
		No	REPLACE IAC valve component. RECONNECT all components. RERUN OBD Test.
4	CHECK AIR INLET FOR PLUGGING • Key off. • Inspect entire air inlet system for debris blockage and other damage. • Remove and inspect air filter element for excessive dirt. • **Is air inlet system okay?**	Yes	Go to next step.
		No	SERVICE as necessary. RECONNECT all components. RERUN OBD Test.

5	CHECK FOR VACUUM LEAKS
	• Key on, engine running.
	• With engine running at idle, listen for vacuum leaks.
	• Inspect entire air inlet system from MAF sensor to intake manifold for leaks such as:
	  • Cracked or punctured air inlet tube
	  • Loose air inlet tube at air cleaner housing or throttle body
	  • IAC valve component or gasket seal
	  • EGR valve gasket seal
	  • Vacuum supply connector and hose
	  • Positive crankcase ventilation (PCV) valve hose
	• **Are any leaks detected in above areas?**
		Yes	SERVICE as necessary.
			RECONNECT all components.
			RERUN OBD Test.

		No	Go to next step.

STEP	INSPECTION		ACTION

6	CHECK IAC VALVE SIGNAL CIRCUIT CONTINUITY
	• Key off.
	• IAC valve disconnected.
	• Disconnect PCM. Inspect for damaged or pushed out pins, corrosion, loose wires, etc. Service as necessary.
	• Install breakout box. Leave PCM disconnected.
	• Measure resistance between appropriate Test Pin at breakout box and IAC valve circuit at IAC valve connector.
	  • IAC valve terminal A and Test Pin 20
	  • IAC valve terminal B and Test Pin 83
	• **Is resistance less than 5.0 ohms?**
		Yes	Go to next step.

		No	SERVICE open circuit. REMOVE breakout box. RECONNECT all components. RERUN OBD Test.

7	CHECK IAC VALVE CIRCUIT FOR SHORT TO POWER CIRCUIT
	• Key off.
	• Breakout box installed. PCM disconnected.
	• IAC valve disconnected.
	• Key on, engine off.
	• Measure voltage between appropriate Test Pin at breakout box and chassis ground.
	  • IAC valve=Test Pin 20
	  • IAC valve=Test Pin 83
	• **Is voltage less than 1.0 volt?**
		Yes	Go to next step.

		No	SERVICE short circuit. REMOVE breakout box. RECONNECT all components. RERUN OBD Test.

8	CHECK IAC VALVE SIGNAL CIRCUIT FOR SHORT TO GROUND
	• Key off.
	• Breakout box installed. PCM disconnected.
	• IAC valve disconnected.
	• Measure resistance between appropriate Test Pin at breakout box and Test Pins 51 and 103 at breakout box.
	  • IAC valve=Test Pin 20
	  • IAC valve=Test Pin 83
	• **Is each resistance greater than 10,000 ohms?**
		Yes	Go to next step.

		No	SERVICE short circuit. RECONNECT all components. RERUN OBD Test.
9	CHECK IAC VALVE SIGNAL FROM PCM • Key off. • Breakout box installed. • Reconnect PCM to breakout box. • Reconnect IAC valve. • Connect DVOM between Test Pin 83 and Test Pin 51 at breakout box. • Start engine. • Slowly increase to 3,000 rpm. • **Is voltage between 3.0 and 11.5 volts?**	Yes	For Continuous Memory DTCs P1504 and P1507. Go to next step. INSPECT throttle body for damage, SERVICE as necessary. If okay, REPLACE IAC valve component. RESET PCM to completely clear DTCs. ☞ After Repair Procedure COMPLETE OBD II Drive Mode. RERUN OBD Test.
		No	REPLACE PCM. REMOVE breakout box. RECONNECT all components. RERUN OBD Test.

STEP	INSPECTION		ACTION

10	CHECK IAC SYSTEM FOR INTERMITTENT OPEN OR SHORT
	• NGS tester connected.
	• Key on engine running.
	• Access IAC and RPM PIDs.
	• With engine at normal operating temperature, accessories off and at idle, IAC duty cycle should read between 20% and 45%.
	• Observe IAC and RPM PIDs for an indication of fault while performing following at idle:
	  • Lightly tap on IAC valve component and wiggle harness connector to simulate road shock
	  • Grasp vehicle harness closest to IAC valve component. Shake and bend small section of harness from IAC to dash panel and from dash panel to PCM
	• **Do IAC or RPM PIDs suddenly change in value indicating fault?**
		Yes	ISOLATE fault and SERVICE as necessary.
			RECONNECT all components.
			RESET PCM to completely clear DTCs.
			☞ After Repair Procedure
			COMPLETE OBD II Drive Mode.
			RERUN OBD Test.

		No	**For idle quality, starting, or stalling symptoms currently present:** REPLACE IAC valve component. RECONNECT all components. RESET PCM to completely clear DTCs. ☞ After Repair Procedure COMPLETE OBD II Drive Mode. **All others:** Unable to duplicate and/or identify fault at this time. Intermittent poor connection or component malfunction (REPAIR or REPLACE as necessary). Go to ENGINE SYMPTOM TROUBLESHOOTING No.27.

DTC	P0603 P0605	PCM Keep alive memory (KAM) test error PCM Read only memory (ROM) test error
DESCRIPTION		• DTC P0603 indicates PCM Keep Alive Memory (KAM) error • DTC P0605 indicates PCM Read Only Memory (ROM) error

[Possible Cause]
- Battery terminals corrosion or loose connections
- Improper keep alive power circuit wire routing
- Harness open in keep alive power circuit
- Damaged PCM

STEP	INSPECTION		ACTION
1	CHECK BATTERY TERMINALS **Note** • If Keep Alive Power (KAPWR) is interrupted to PCM (i.e. when breakout box is installed or battery is disconnected), DTC P0603 and/or P0605 may be generated on first power-up. • Inspect battery cables for loose connections, corrosion, etc. • **Are battery terminal connections in good condition?**	Yes	Go to next step.
		No	SERVICE battery terminals as necessary. RERUN OBD Test.
2	INSPECT ENGINE COMPARTMENT FOR PROPER WIRE ROUTING • Inspect PCM wiring for proximity to ignition components or wires. • **Is wiring too close to ignition components or wires?**	Yes	REROUTE as necessary. RERUN OBD Test.
		No	Engine compartment wire routing is okay. Go to next step.
3	CHECK KEEP ALIVE POWER CIRCUIT TO PCM • Key off. • Disconnect PCM. Inspect for damaged or pushed out pins, corrosion, loose wires, etc. Service as necessary. • Install breakout box. Leave PCM disconnected. • Measure voltage between Test Pin 55 and Test Pin 51 or 103 at breakout box. • While observing DVOM, grasp PCM harness and wiggle, shake or bend small section while working from PCM to dash panel. • **Is voltage less than 10.5 volts?**	Yes	ISOLATE and SERVICE open in keep alive power circuit. REMOVE breakout box. RECONNECT PCM. RERUN OBD Test.
		No	No open in keep alive power circuit harness circuit detected. REMOVE breakout box. RECONNECT PCM. Go to next step.
4	CHECK FOR REPEAT OF DTC P0603/P0605 • Activate KOEO Self-Test. • **Is DTC P0603/P0605 represent?**	Yes	REPLACE PCM. RERUN OBD Test.
		No	SERVICE other DTCs as necessary. If none, testing is complete. DTC P0603/P0605 was due to previous service action mentioned in step 1.

DTC P0703	Brake switch input malfunction
DESCRIPTION	• Continuous Memory DTC P0703 indicates brake switch input fault

[Possible Cause]
- Open to ground or power
- Damaged brake switch
- Damaged PCM

STEP	INSPECTION		ACTION
1	CHECK OPERATION OF BRAKE LIGHT • Apply and release brake pedal several times and observe brake light operation. • **Does brake light operate normally?**	Yes	Go to next step.
		No	Go to step 3 if brake light is never on. Go to step 5 if brake light is always on.
2	CHECK FOR PCM BOO PID CYCLING • Key on, engine off. • Access BOO PID. • Apply and release brake pedal several times while viewing BOO PID. **Note** • If BOO PID is not accessible, check brake light circuit. • **Does BOO PID cycle ON/OFF?**	Yes	Go to Pinpoint Test for intermittent key on engine off (KOEO) input sensor wiggle procedure.
		No	Check brake light circuit.
3	CHECK FOR POWER CIRCUIT TO BRAKE SWITCH **Note** • Using 12 volt test lamp, verify integrity of related fuses in fuse panel and check condition of brake light bulbs before starting this test. • Key off. • Disconnect brake switch. • Measure brake light input voltage between brake switch and chassis ground. • **Is voltage greater than 10.5 volts?**	Yes	Go to next step.
		No	SERVICE open power circuit to brake switch. RECONNECT switch. RESET PCM to completely clear DTCs. ☞ After Repair Procedure COMPLETE OBD II Drive Mode. RERUN OBD Test.
4	VERIFY INTEGRITY OF BRAKE SWITCH • Brake switch disconnected. • Connect digital multimeter test probes to brake switch terminals at brake switch. • Apply brake pedal while monitoring reading. • **Is resistance less than 5.0 ohms?**	Yes	SERVICE open circuit between brake switch and stoplamp ground. RECONNECT brake switch. RESET PCM to completely clear DTCs. ☞ After Repair Procedure COMPLETE OBD II Drive Mode. RERUN OBD Test.
		No	REPLACE brake switch. RECONNECT brake switch. RESET PCM to completely clear DTCs. ☞ After Repair Procedure COMPLETE OBD II Drive Mode. RERUN OBD Test.
5	VERIFY BRAKE SWITCHES NOT ALWAYS CLOSED • Key off. • Brake switch disconnected. • Key on, Engine off. • **Is brake light still on?**	Yes	Go to next step.
		No	VERIFY proper installation of brake switch. If okay, REPLACE brake switch. RECONNECT brake switch. RESET PCM to completely clear DTCs. ☞ After Repair Procedure COMPLETE OBD II Drive Mode. RERUN OBD Test.
6	CHECK FOR SHORT TO POWER CIRCUIT IN PCM • Key off. • Brake switch disconnected. • Key on, engine off. • **Is brake light still on?**	Yes	Go to next step.
		No	REPLACE PCM. RECONNECT brake switch. RERUN OBD Test.

STEP	INSPECTION		ACTION
7	CHECK FOR SHORT TO POWER CIRCUIT IN SHIFT LOCK ACTUATOR • Key off. • PCM disconnected. • Disconnect shift lock actuator, cruise control module, ABS/TCS control module to isolate brake switch. • Key on, engine off. • **Is brake light still on?**	Yes	SERVICE short to power in brake light circuit. RECONNECT PCM, brake switch and other accessories. RERUN OBD Test.
		No	SERVICE short in shift lock actuator, cruise control module or ABS/TCS control module all components. RERUN OBD Test.

DTC P0704	Clutch switch input circuit malfunction
DESCRIPTION	• DTC P0704 indicates malfunction of neutral or clutch switch.

[Possible Cause]
- Crank engine while in self test
- Starter interlock switch disconnected during OBD Test
- Clutch switch circuit shorted to power
- Damaged clutch or neutral switch
- Damaged PCM

STEP	INSPECTION		ACTION

1	**Note**
	• During self test, clutch pedal must be pressed down and gearshift lever in NEUTRAL.
	• Key off.
	• NGS tester connected.
	• Key on, engine off.
	• Look for CPP/PNP PID cycling ON/OFF with:
	  • Transaxle in neutral, then shift into gear and clutch pedal up.
	  • Transaxle in gear and clutch pedal up then down.
	• **Does reading change from ON to OFF for both switches?**
		Yes	Fault intermittent DISCONNECT PCM.
			INSPECT both ends of connector for damaged or pushed out pins, corrosion and loose wires.
			SERVICE as necessary.
			If okay, REPLACE PCM.
			RERUN OBD Test.

		No	Go to next step.
2	CHECK CLUTCH/NEUTRAL SWITCHES • Key off. • Located clutch switch near clutch pedal and neutral switch near transaxle shift linkage. • Inspect both switches and brackets for damage. Service as required. • Disconnect clutch and neutral electrical vehicle harness connector and inspect for damage, pushed out or broken pins and broken wires. Service as required. • Measure resistance across clutch switch terminals with clutch pedal down. • Measure resistance across neutral switch terminals with shift lever in neutral. • **Is resistance less than 5.0 ohms for both switches?**	Yes	Go to next step.
		No	REPLACE damaged clutch or neutral switch. RECONNECT components. RERUN OBD Test.
3	CHECK RESISTANCE OF CLUTCH/NEUTRAL CIRCUIT • Key off. • Disconnect NGS tester. • Disconnect PCM. Inspect for damaged or pushed out pins, corrosion and loose wires. Service as required. • Install breakout box. Leave PCM disconnected. • Measure resistance between Test Pin 91 at breakout box and same test pin 91 at clutch and neutral vehicle harness connector. • **Is each resistance less than 5.0 ohms?**	Yes	Go to next step.
		No	SERVICE open circuit. REMOVE breakout box. RECONNECT all components. RERUN OBD Test.
4	CHECK CLUTCH/NEUTRAL CIRCUIT FOR SHORT • Key off. • NGS tester disconnected. • Breakout box installed PCM disconnected. • Clutch and neutral vehicle harnesses disconnected. • Measure resistance between Test Pins 64 and 91 at breakout box and chassis ground. • **Is resistance greater than 10,000 ohms?**	Yes	REPLACE PCM. REMOVE breakout box. RECONNECT all components. RERUN OBD Test.
		No	SERVICE short circuit. REMOVE breakout box. RECONNECT all components. RERUN OBD Test.

DTC P1001	Active self-test standard protocol communication error
DESCRIPTION	• Key on engine running (KOER) self test cannot be completed

[Possible Cause]
- Damaged DLC
- Incorrect self test activation method
- Constant voltage is not in specification
- Idle RPM out of specification
- Open in DLC harness circuit
- Short in DLC harness circuit
- Damaged main relay circuit
- Damaged PCM

STEP	INSPECTION		ACTION
1	VERIFY SELF TEST ACTIVATION METHOD • Key off. • Disconnect NGS tester from DLC. Inspect DLC for damage. Service as necessary. • Verify that correct procedure was used to activate continuous, key on engine off (KOEO) or key on engine running (KOER) Self Test for NGS tester. • **Was correct self test activation method used?**	Yes	Go to next step.
		No	COMPLETE self test using correct procedure.
2	CHECK FOR CONSTANT VOLTAGE AT TP SENSOR • Key off. • TP sensor disconnected. • Key on, engine off. • Measure voltage between constant voltage and TP sensor ground circuit at TP sensor vehicle harness connector. • Key off. • **Was voltage between 4.0 and 6.0 volts?**	Yes	RECONNECT TP sensor. Go to next step.
		No	REPAIR open in constant voltage circuit. RECONNECT TP sensor.
3	ABILITY TO ACCESS CONTINUOUS MEMORY DTCs • **Could Continuous Memory DTCs be accessed before this OBD Test was entered?**	Yes	Go to next step.
		No	Go to step 6.
4	ABILITY TO ACTIVATE KOEO SELF TEST • **Could KOEO Self Test be activated and completed before this OBD Test was entered?**	Yes	Go to next step.
		No	Go to step 6.
5	ABILITY TO ACTIVATE KOER SELF TEST • **Could KOER Self Test be activated or completed before this OBD Test was entered?**	Yes	CHECK that correct PCM is installed on vehicle.
		No	Go to next step.

STEP	INSPECTION		ACTION
6	RETRIEVE ANY CONTINUOUS MEMORY DTCs **Note** • If failures are present in following components or systems, this could cause PCM to complete KOER self test and/or cause PCM to generate NGS tester communication error message: ① Idle speed control ② EGR system ③ Fuel control system ④ Vehicle speed sensor circuits ⑤ Mass air flow sensor circuits ⑥ Transaxle range switch circuits **Note** • For information on retrieving MIL and non-MIL DTCs, continuous memory self test. • NGS tester connected. • Key on, engine off. • Retrieve and record all Continuous Memory DTCs (MIL and non-MIL). • Key off. • **Were any Continuous Memory DTCs present.**	Yes	Go to appropriate DTC chart.
		No	Go to step 7.
7	CHECK POWER CIRCUIT AT DLC • Key off. • Inspect DLC for damage. Service as necessary. • Measure voltage between power circuit cavity at DLC and engine block ground. • **Is voltage greater 10.5 volts?**	Yes	Go to next step.
		No	SERVICE open in DLC power circuit. RERUN OBD Test.
8	CHECK DLC CHASSIS GROUND CONTINUITY • Key off. • Measure resistance between chassis ground circuit cavity at DLC and chassis ground. • **Is resistance less than 5.0 ohms?**	Yes	Go to next step.
		No	SERVICE open in DLC chassis ground circuit. RERUN OBD Test.
9	CHECK DLC GROUND CIRCUIT CONTINUITY • Key off. • Disconnect PCM. Inspect for damaged or pushed out pins, loose wires, corrosion, etc. Service as necessary. • Install breakout box. Leave PCM disconnected. • Disconnect NGS tester form DLC. • Measure resistance between Test Pin 51 or 103 at breakout box and ground circuit cavity at DLC. • **Is resistance less than 5.0 ohms?**	Yes	Go to next step.
		No	SERVICE open in DLC ground circuit. RECONNECT PCM. REMOVE breakout box. RERUN OBD Test.
10	CHECK DLC BUS(–) CIRCUIT CONTINUITY • Key off. • Breakout box installed. Leave PCM disconnected. • Measure resistance between Test Pin 15 at breakout box and BUS(–) circuit at DLC. • **Is resistance less than 5 ohms?**	Yes	Go to next step.
		No	SERVICE open in DLC BUS(–) circuit. RECONNECT PCM. REMOVE breakout box. RERUN OBD Test.

STEP	INSPECTION		ACTION
11	CHECK BUS(–) CIRCUIT FOR SHORT TO CHASSIS GROUND • Key off. • Breakout box installed. Leave PCM disconnected. • Disconnect NGS tester. • Measure resistance between Test Pin 15 at breakout box and chassis ground. • **Is resistance greater than 10,000 ohms?**	Yes	Go to next step.
		No	SERVICE short to chassis ground in BUS(–) circuit. RECONNECT PCM. REMOVE breakout box. RERUN OBD Test.
12	CHECK BUS(–) CIRCUIT FOR SHORT TO POWER • Key off. • Breakout box installed. Leave PCM disconnected. • Disconnect NGS tester. • Key on, engine off. • Measure voltage between Test Pin 15 and Test Pin 51 or 103 at breakout box. • **Was voltage greater than 6.0 volts?**	Yes	SERVICE Short to power in BUS(–) circuit. RECONNECT PCM. REMOVE breakout box. RERUN OBD Test.
		No	Go to next step.
13	CHECK DLC BUS(+) CIRCUIT CONTINUITY • Key off. • Breakout box installed. Leave PCM disconnected. • Measure resistance between Test Pin 16 at breakout box and BUS(+) circuit at DLC. • **Is resistance less than 5.0 ohms?**	Yes	Go to next step.
		No	SERVICE open in DLC (+) circuit. RECONNECT PCM. REMOVE breakout box. RERUN OBD Test.
14	CHECK BUS(+) CIRCUIT FOR SHORT TO CHASSIS GROUND • Key off. • Disconnect NGS tester. • Measure resistance between Test Pin 16 at breakout box and chassis ground. • **Is resistance greater than 10,000 ohms?**	Yes	There is no short chassis ground in BUS(+) circuit. Go to next step.
		No	SERVICE short to power in BUS(+) circuit. RECONNECT PCM. REMOVE breakout box. RERUN OBD Test.
15	CHECK BUS(+) CIRCUIT FOR SHORT TO POWER • Key off. • Breakout box installed. Leave PCM disconnected. • Disconnect NGS tester. • Key on, engine off. • Measure voltage between Test Pin 16 and Test Pins 51 or 103 at breakout box. • **Was voltage greater than 1.0 volt?**	Yes	SERVICE short to power in BUS(+) circuit. RECONNECT PCM. REMOVE breakout box. RERUN OBD Test.
		No	REPLACE PCM.

DTC P1100	MAF sensor intermittent
DESCRIPTION	• Continuous Memory DTC P1100 indicates MAF sensor signal went below 0.39 volts or above 4.35 volts (refer to Voltage to Mass Air Flow Conversion Table at beginning of this Test in 01–40B MASS AIR FLOW SENSOR INSPECTION [KL]) sometime during last 40 warm-up cycles

[Possible Cause]
- Poor continuity with MAF sensor connector
- Poor continuity with MAF harness
- MAF harness intermittent short
- MAF sensor internal intermittent open or short

STEP	INSPECTION		ACTION
1	CHECK FOR MAF SIGNAL CIRCUIT INTERMITTENT VOLTAGE INPUT • Start engine and bring to idle. **Note** • If stabilized idle is not stabilized at minimum of 700 rpm, go to ENGINE SYMPTOM TROUBLESHOOTING. • NGS tester connected. • Run throttle up to 1,500 rpm for 5 seconds, then bring back to idle. • Access MAF PID for fault indication while performing following: • Lightly tap on MAF sensor and wiggle harness connector to simulate road shock • **Is MAF PID within specified value?** **☞ 01–40B MASS AIR FLOW SENSOR INSPECTION [KL]**	Yes	DISCONNECT and INSPECT MAF sensor connector. If okay, REPLACE MAF sensor. RESET PCM to completely clear DTCs. ☞ After Repair Procedure COMPLETE OBD II Drive Mode. RERUN OBD Test.
		No	Go to next step.

2	CHECK MAF HARNESS TO PCM FOR INTERMITTENT OPENS OR SHORTS
	• Key off.
	• Disconnect PCM. Inspect for damaged or pushed out pins, corrosion, loose wires, etc. Service as necessary.
	• Install breakout box. Reconnect PCM.
	• Key on, engine off.
	• Connect DVOM between Test Pin 88 and Test Pin 36 at breakout box.
	• While viewing DVOM, do following:
	  • Grasp vehicle harness closest to MAF sensor connector
	  • Shake and bend small section of harness all way to dash panel
	  • Wiggle, shake and bend harness from dash panel to PCM
	• **Does voltage go below minimum 0.39 volts or above maximum 3.90 volts?**
		Yes	ISOLATE fault and SERVICE as necessary.
			RECONNECT all components.
			RESET PCM to completely clear DTCs.
			☞ After Repair Procedure
			COMPLETE OBD II Drive Mode.
			RERUN OBD Test.

		No	Unable to duplicate and/or identify fault at this time. Intermittent poor connection or component malfunction (REPAIR or REPLACE as necessary). Go to SYMPTOM TROUBLESHOOTING No.27.

DTC P1101	MAF sensor out of self-test range
DESCRIPTION	• Key On Engine Running (KOER) DTC P1101 indicates MAF signal circuit was not between 0.34 and 1.96 volts during KOER self-test

[Possible Cause]
- Damaged MAF sensor
- Contaminated MAF sensor
- MAF sensor partially connected
- Open MAF sensor ground circuit
- Open PCM ground circuit (between PCM and MAF sensor ground circuit)
- Damaged PCM

STEP	INSPECTION		ACTION
1	CHECK FOR MAF SENSOR CONTINUOUS MEMORY CODES • Drive vehicle for 6 to 10 minutes. • Rerun Continuous Memory and KOEO self-test. • **Is Continuous Memory DTC present with KOER DTC P1101?**	Yes	**For Continuous Memory DTC P0102:** Go to appropriate MAF sensor Monitor DTC test. **For Continuous Memory DTC P0103:** Go to appropriate MAF sensor Monitor DTC test. **For all other Continuous Memory DTCs:** Go to appropriate DTC test.
		No	Go to next step.
2	CHECK MAF SENSOR OUTPUT VOLTAGE **Note** • DTC P1101 could be generated by low charged vehicle battery or garage exhaust ventilation system. Service battery as necessary then remove ventilation system and properly vent to outside atmosphere. Rerun KOEO or KOER self-test. • Key off. • Check that MAF sensor is corrected. If not, service as necessary. • Disconnect PCM. Inspect for damaged or pushed out pins, corrosion, loose wires, etc. Service as necessary. • NGS tester connected. • Install breakout box. Connect PCM to breakout box. • Key on, engine off. • Measure between Test Pin 88 and Test Pins 24 or 103 at breakout box. • **Is voltage greater than 0.20 volts?**	Yes	MAF signal circuit voltage is greater than expected. Go to step 14.
		No	Go to step 10.
3	CHECK MAF SENSOR GROUND CIRCUIT CONTINUITY • Key off. • MAF sensor disconnected. • Breakout box installed. • Disconnect PCM. • Disconnect NGS tester from DLC. • Measure resistance between MAF sensor ground circuit at MAF sensor vehicle harness connector and battery negative post. • **Is resistance less than 10 ohms?**	Yes	MAF sensor ground circuit harness circuit to MAF sensor is okay. RECONNECT NGS tester. Go to next step.
		No	SERVICE open in MAF sensor ground harness circut. REMOVE breakout box. RECONNECT all components. RESET PCM to completely clear DTCs. ☞ After Repair Procedure COMPLETE OBD II Drive Mode. RERUN OBD Test.
4	CHECK PCM GROUND CIRCUIT (BETWEEN PCM AND MAF SENSOR GROUND CIRCUIT) CIRCUIT CONTINUITY • Key off. • MAF sensor disconnected. • Breakout box installed. • PCM disconnected. • Measure resistance between MAF sensor vehicle harness connector and Test Pin 36 at breakout box. • **Is resistance less than 5.0 ohms?**	Yes	MAF RTN circuit harness to PCM is okay. Go to next step.
		No	SERVICE open in PCM ground harness circuit. REMOVE breakout box. RECONNECT all components. RESET PCM to completely clear DTCs. ☞ After Repair Procedure COMPLETE OBD II Drive Mode. RERUN OBD Test.

STEP	INSPECTION		ACTION
5	CHECK MAF CIRCUIT FOR SHORT TO GROUND IN PCM • Key off. • MAF sensor disconnected. • Breakout box installed. • Reconnect PCM to breakout box. • Disconnect NGS tester from DLC. • Measure resistance between Test Pin 88 and Test Pins 36 and 24 or 103 at breakout box. • **Is each resistance greater than 10,000 ohms?**	Yes	RECONNECT NGS tester. Go to next step.
		No	MAF signal circuit shorted to MAF sensor ground or PCM ground circuit in PCM. REMOVE breakout box. RECONNECT MAF sensor. RESET PCM to completely clear DTCs. ☞ After Repair Procedure COMPLETE OBD II Drive Mode. RERUN OBD Test.
6	CHECK PCM GROUND CIRCUIT (BETWEEN PCM AND MAF SENSOR GROUND CIRCUIT) FOR SHORT TO GROUND CIRCUIT IN PCM • Key off. • MAF sensor disconnected. • Breakout box installed. • PCM connected to breakout box. • NGS tester disconnected from DLC. • Measure resistance between Test Pin 36 and Test Pins 51 or 103 at breakout box. • **Is resistance greater than 10,000 ohms?**	Yes	RECONNECT NGS tester. Go to next step.
		No	PCM ground circuit shorted to ground circuit in PCM. REPLACE PCM. REMOVE breakout box. RECONNECT all components. RERUN OBD Test.
7	CHECK MAF SENSOR CIRCUIT OUTPUT • Key off. • MAF sensor connected. • Breakout box installed. • PCM connected. • Key on, engine running. **Note** • If stabilized idle is not stabilized at minimum of 700 rpm, go to ENGINE SYMPTOM TROUBLESHOOTING. • Measure voltage between Test Pin 88 at breakout box and battery negative post. • **Is voltage between 0.34 and 1.96 volts at idle?**	Yes	MAF signal circuit to PCM is okay. Go to next step.
		No	MAF signal circuit or MAF sensor ground circuit is open in MAF sensor, or MAF signal circuit is shorted to PCM ground circuit in MAF sensor. REPLACE MAF sensor. REMOVE breakout box. RECONNECT PCM. RESET PCM to completely clear DTCs. ☞ After Repair Procedure COMPLETE OBD II Drive Mode. RERUN OBD Test.
8	VERIFY MAF SENSOR CIRCUIT INPUT AND OUTPUT • Key off. • MAF sensor connected. • Breakout box installed. • PCM connected. • Key on, engine running. • Measure voltage between Test Pin 88 and Test Pin 36 at breakout box. • **Is voltage between 0.34 and 1.96 volts?**	Yes	PCM ground circuit in MAF sensor is okay. Go to next step.
		No	PCM ground circuit open in MAF sensor. REPLACE MAF sensor. REMOVE breakout box. RECONNECT PCM. RESET PCM to completely clear DTCs. ☞ After Repair Procedure COMPLETE OBD II Drive Mode. RERUN OBD Test.
9	CHECK MAF SENSOR CIRCUIT OUTPUT WITH NGS TESTER • Key off. • MAF sensor connected. • Key on, engine running. • Access MAF PID with NGS tester at idle. • **Is MAF PID within specified value?** ☞ 01–40B MASS AIR FLOW SENSOR INSPECTION [KL]	Yes	Unable to identify fault at this time. Check possible intermittent. Go to SYMPTOM TROUBLESHOOTING No.27.
		No	MAF sensor signal circuit or PCM ground circuit is open or shorted together in PCM. REPALCE PCM. REMOVE breakout box. RECONNECT PCM. RESET PCM to completely clear DTCs. ☞ After Repair Procedure COMPLETE OBD II Drive Mode. RERUN OBD Test.

STEP	INSPECTION		ACTION
10	CHECK CONTINUITY OF POWER CIRCUIT CIRCUIT • Key off. • MAF sensor disconnected. • Disconnect PCM. Inspect for damaged or pushed out pins, corrosion, loose wires, etc. Service as necessary. • Install breakout box. Leave PCM disconnected. • Measure resistance between MAF sensor connector and Test Pin 71 or 97 at breakout box. • **Is resistance less than 5.0 ohms?**	Yes	Power harness circuit to PCM is okay. Go to next step.
		No	Service open in power harness circuit. REMOVE breakout box. RECONNECT all components. RESET PCM to completely clear DTCs. ☞ After Repair Procedure COMPLETE OBD II Drive Mode. RERUN OBD Test.
11	CHECK MAF SENSOR CIRCUIT FOR SHORTS TO GROUND CIRCUIT AND PCM GROUND CIRCUIT • Key off. • MAF sensor disconnected. • Breakout box installed. • PCM disconnected. • Disconnect NGS tester from DLC. • Measure resistance between Test Pin 88 and Test Pins 36 and 24 or 103 at breakout box. • **Is each resistance greater than 10,000 ohms?**	Yes	MAF signal circuit, PCM ground circuit and ground circuit harness circuits to PCM are okay. RECONNECT NGS tester. Go to next step.
		No	Service short circuit between MAF signal circuit and ground circuit or PCM ground circuit. REMOVE breakout box. RECONNECT all components. RESET PCM to completely clear DTCs. ☞ After Repair Procedure COMPLETE OBD II Drive Mode. RERUN OBD Test.
12	CHECK PCM GROUND CIRCUIT (BETWEEN PCM AND MAF SENSOR GROUND CIRCUIT) FOR SHORT TO GROUND CIRCUITS. • Key off. • MAF sensor disconnected. • Breakout box installed. • PCM disconnected. • NGS tester disconnected from DLC. • Measure resistance between Test Pin 36 and Test Pin 51 or 103 at breakout box. • **Is each resistance greater than 10,000 ohms?**	Yes	RECONNECT NGS tester. Go to next step.
		No	SERVICE short circuit between MAF signal circuit and ground circuit. REMOVE breakout box. RECONNECT all components. RESET PCM to completely clear DTCs. ☞ After Repair Procedure COMPLETE OBD II Drive Mode.
13	CHECK CONTINUITY OF MAF SIGNAL CIRCUIT • Key off. • MAF sensor disconnected. • Breakout box installed. • PCM disconnected. • Measure resistance between MAF sensor vehicle harness connector and Test Pin 88 at breakout box. • **Is resistance less than 5.0 ohms?**	Yes	MAF signal harness circuit to PCM is okay. Go to next step.
		No	SERVICE open in MAF signal harness circuit. REMOVE breakout box. RECONNECT all components. RESET PCM to completely clear DTCs. ☞ After Repair Procedure COMPLETE OBD II Drive Mode. RERUN OBD Test.
14	CHECK GROUND CIRCUIT TO MAF SENSOR • Key off. • MAF sensor disconnected. • Breakout box installed. • PCM connected to breakout box. • Key on, engine off. • Measure voltage between power circuit and ground circuit at MAF sensor vehicle harness connector. • **Is voltage greater than 10.5 volts?**	Yes	Ground harness circuit from battery negative post to MAF sensor is okay. Go to step 4.
		No	Go to step 3.

DTC P1116	ECT sensor input signal out of self-test range
DESCRIPTION	• DTC P1116 (ECT) indicates that corresponding sensor is out of self-test range. Correct range of measurement is • –6.6 °C {20 °F} to 115 °C {240 °F} (KOEO) • 49 °C {120 °F} to 115 °C {240 °F} (KOER)

[Possible Cause]
- Low coolant level
- Damaged harness connector
- Overheated condition
- Poor thermostat operation
- Damaged sensor

STEP	INSPECTION		ACTION
1	CHECK OPERATION, INSTALLATION OF ENGINE COOLANT TEMPERATURE SENSOR • Run engine at 2,000 rpm until engine temperature stabilizes. NO START: • Go to step 3 VEHICLE STALLS: • Return to Symptom Flow Chart • Check that upper radiator hose is hot and pressurized. • Rerun Key On Engine Running (KOER) self-test. • **Is DTC P1116 present?**	Yes	**For symptom of cooling system concern:** Do not service DTC P1116, service next DTC. If no other DTC's exists, RETURN to Symptom Flow Charts. **All others:** Go to next step.
		No	Engine was not during closed loop operating condition. SERVICE other DTCs as necessary.
2	CHECK CONSTANT VOLTAGE CIRCUIT VOLTAGE AT THROTTLE POSITION SENSOR • Key off. • Disconnect TP sensor. • Measure voltage between constant voltage circuit and TP sensor ground circuit at TP sensor vehicle harness connector. • **Is voltage between 4.5 volts and 5.5 volts?**	Yes	There is sufficient constant voltage. RECONNECT TP sensor. Go to next step.
		No	REPAIR open in constant circuit. Go to ENGINE SYMPROM TROUBLESHOOTING No.31.
3	CHECK RESISTANCE OF ENGINE COOLANT TEMPERATURE SENSOR WITH ENGINE OFF • Key off. • Disconnect ECT sensor. • Measure resistance between sensor signal circuit and TP sensor ground circuit at ECT sensor. • **Is resistance within specification?**	Yes	**For ECT sensor with NO START:** Do not service DTC P1116 at this time. RETURN to Symptom Flow Charts. **All others:** Go to next step.
		No	REPLACE suspect sensor. RECONNECT vehicle harness. RERUN OBD Test.
4	CHECK RESISTANCE OF TEMPERATURE SENSOR WITH ENGINE RUNNING **Note** • Verify that engine is at operating temperature before taking ECT readings. • Key off. • Suspect engine coolant temperature sensor disconnected. • Run engine for two minutes at 2,000 rpm. • Measure resistance between sensor signal circuit and TP sensor ground circuit at engine coolant temperature sensor. • **Is resistance within specification?**	Yes	REPALCE PCM. RECONNECT vehicle harness. RERUN OBD Test.
		No	REPLACE suspect sensor. RECONNECT vehicle harness. RERUN OBD Test.

DTC P1120	TP sensor out of range low
DESCRIPTION	• DTC P1120 indicates throttle position (TP) signal within self-test range but with closed throttle position range of below 0.17 volts

[Possible Cause]
- Frayed wires
- Corrosion on TP sensor, PCM or harness connectors
- Constant voltage circuit harness open or shorts
- Damaged TP sensor
- Damaged PCM

STEP	INSPECTION		ACTION
1	CHECK FRAYED TP CIRCUIT WIRES OR CORROSION ON CONNECTORS • Do complete visual inspection of harness connector at TP sensor (including pins) for corrosion. • Do complete visual inspection of harness wires between TP sensor and PCM for insulation fraying and corrosion. • **Is fault present?**	Yes	SERVICE as necessary. RESET PCM to completely clear DTCs. ☞ After Repair Procedure COMPLETE OBD II Drive Mode. RERUN OBD Test.
		No	Go to next step.
2	CHECK FOR STUCK TP SENSOR • Key on, engine off. • Access TP V PID with NGS tester. • Slowly move throttle from closed throttle position to wide open throttle and observe TP V PID. • **While opening throttle, TP V PID 0.49 volts?**	Yes	Go to next step.
		No	Go to DTC P1125 (Continuous).
3	CHECK CONSTANT VOLTAGE CIRCUIT VOLTAGE • Key off. • TP sensor disconnected. • Key on, engine off. • Measure voltage between constant voltage circuit and TP sensor ground circuit at TP sensor vehicle harness connector. • **Is voltage between 4.0 and 6.0 volts?**	Yes	Go to next step.
		No	Key off. RECONNECT all components. REPAIR open in constant circuit.
4	CHECK TP SENSOR CIRCUIT CONTINUITY • Key off. • TP sensor disconnected. • Disconnect PCM. Inspect for damaged or pushed out pins, corrosion, loose wires, etc. Service as necessary. • Install breakout box. Leave PCM disconnected. • Measure resistance between TP circuit at TP sensor vehicle harness connector and Test Pin 89 at breakout box. • **Is resistance less than 5.0 ohms?**	Yes	TP signal circuit harness circuit to PCM is okay. Go to next step.
		No	SERVICE corrosion or open in TP SIG circuit harness. RESET PCM to completely clear DTCs. ☞ After Repair Procedure COMPLETE OBD II Drive Mode. RERUN OBD Test.
5	CHECK TP SENSOR SIGNAL TO PCM • Key off. • Connect PCM to breakout box. • Connect TP sensor. • Start engine and idle for 2 minutes. • Measure voltage between Test Pin 89 and Test Pin 91 at breakout box while slowly opening throttle from closed position. • **Is voltage between 0.17 to 0.49 volts?**	Yes	TP sensor is damaged. REPLACE TP sensor. REMOVE breakout box. RERUN OBD Test.
		No	RERUN OBD Test. If DTC P1120 is still present, Go to DTC P1125 (Continuous).

DTC P1121	TP sensor input signal inconsistent with MAF sensor
DESCRIPTION	• Continuous Memory DTC P1121 indicates throttle position is inconsistent with MAF sensor

[Possible Cause]
- Damaged TP sensor
- TP sensor not seated properly (almost completely detached from throttle body)
- Air leak between MAF sensor and throttle body

STEP	INSPECTION		ACTION
1	TP SENSOR AND MAF SENSOR RATIONALITY CHECK • Attempt to start engine. • **Does engine run?**	Yes	Go to next step.
		No	CHECK for major leaks, cracks, and openings between MAF sensor and throttle body.
2	CHECK MECHANICAL OPERATION OF TP SENSOR • Key on, engine off. • Access TP V PID with NGS tester. • Slowly move throttle from closed throttle position to wide open throttle position and observe TP V PID for smooth reading change. • **While opening and closing throttle, is there sudden drop in TP V PID below 0.66 volts or sudden jump in TP V PID 1.20 volts?**	Yes	TP sensor has internal substrate problem. REPLACE TP sensor. RERUN OBD Test.
		No	Go to next step.
3	CHECK TP SENSOR SIGNAL HIGH VERSUS ENGINE LOAD WHILE DRIVING VEHICLE • Key on, engine running. • Do normal drive, exercising throttle and TP sensor while accessing PIDs. • Access TP V PID and LOAD PID with NGS tester and record readings. • **Is TP V PID greater than 2.44 volts and LOAD PID reading less than 25%?**	Yes	CHECK for air leaks between MAF sensor and throttle body including air noise sounds while engine is running. SERVICE as necessary. If okay, REPLACE TP sensor. RERUN OBD Test.
		No	Go to next step.
4	CHECK TP SENSOR SIGNAL LOW VERSUS ENGINE LOAD • Key on, engine running. **Note** • If vehicle does not Start, go to ENGINE SYMPTOM TROUBLESHOOTING. • Access TP V PID and LOAD PID with NGS tester and record readings. • **Is TP V PID reading less than 0.24 volts and LOAD PID reading greater than 60%?**	Yes	CHECK for TP sensor loosely connected to throttle body (screws not securely tightened down). SERVICE as necessary. RESET PCM to completely clear DTCs. ☞ After Repair Procedure COMPLETE OBD II Drive Mode. DRIVE vehicle exercising throttle. RERUN OBD Test. If Continuous Memory P1121 is now present, REPLACE MAF sensor.
		No	Go to next step.
5	CHECK TP SENSOR SIGNAL LOW VERSUS ENGINE LOAD WHILE DRIVING VEHICLE • Key on, engine running. • Do normal drive, exercising throttle and TP sensor near higher gears (preferably overdrive) while accessing PIDs. • Access TP V PID and LOAD PID with NGS tester and record readings. • **Is TP V PID reading less than 0.24 volts and LOAD PID reading greater than 60%?**	Yes	CHECK for TP sensor loosely connected to throttle body (screws not securely tightened down). SERVICE as necessary. RESET PCM to completely clear DTCs. ☞ After Repair Procedure COMPLETE OBD II Drive Mode. DRIVE vehicle exercising throttle. RERUN OBD Test. If Continuous Memory P1121 is now present, REPLACE MAF sensor.
		No	Unable to identify fault at this time. If vehicle is still No start, Go to ENGINE SYMPTOM TROUBLESHOOTING.

DTC P1124	TP sensor input signal out of self-test range
DESCRIPTION	• TP sensor's rotational setting is not in self-test range of 13.23 to 24.02% (0.43 to 1.17 volts)

[Possible Cause]
- Binding or bent throttle linkage
- TP sensor may not be seated properly (tightened down)
- Throttle plate below closed throttle position
- Throttle plate/screw misadjusted
- Damaged TP sensor
- Damaged PCM

STEP	INSPECTION		ACTION
1	CHECK FOR OTHER DTCS • Active KOEO and KOER self-test. • **Is KOEO or KOER DTC present?**	Yes	Go to appropriate DTC text.
		No	Go to next step.
2	CHECK FOR STUCK THROTTLE PLATE OR LINKAGE • Visually inspect throttle body and throttle linkage for binding or sticking. • Verify throttle plate and linkage is at closed throttle position. • **Does throttle move freely and return to closed throttle position?**	Yes	Throttle plate and linkage are okay.
		No	SERVICE as necessary. RERUN OBD Test.

DTC P1125	TP sensor circuit intermittent
DESCRIPTION	• Continuous Memory DTC P1125 indicates TP sensor signal went below 9.80% (0.17 volts) or above 92.27% (4.60 volts) sometime during last 80 warm up cycles

[Possible Cause]
- TP sensor connector with poor continuity
- TP sensor harness with poor continuity
- TP sensor harness intermittent short
- TP sensor internal electrical or substrate open or electrical short

STEP	INSPECTION		ACTION
1	CHECK FOR TP CIRCUIT INTERMITTENT VOLTAGE INPUT • Start engine and bring to idle. • Run engine up to 1,500 rpm for 5 seconds. • Key on, engine running. • Access TP V PID for fault indication with NGS tester while performing following: • Lightly tap on TP sensor and wiggle harness connector to simulate road shock • **Is TP V PID changing below minimum 0.49 volts or above maximum 4.60 volts?**	Yes	DISCONNECT and INSPECT TP sensor connector. If okay, REPLACE TP sensor. RESET PCM to completely clear DTCs. ☞ After Repair Procedure COMPLETE OBD II Drive Mode. RERUN OBD Test.
		No	Go to next step.

2	CHECK TP SENSOR HARNESS TO PCM FOR INTERMITTENT OPENS OR SHORTS
	• Key off.
	• Disconnect PCM. Inspect for damaged or pushed out pins, corrosion, loose wires, etc. Service as necessary.
	• Install breakout box. Reconnect PCM.
	• Key on, engine off.
	• Connect DVOM between Test Pin 89 and Test Pin 91 at breakout box.
	• While viewing DVOM, do following:
	  • Grasp vehicle harness closest to TP sensor connector
	  • Shake and bend small section of harness all way to dash panel
	  • Wiggle, shake and bend harness from dash panel to PCM
	• **Is voltage changing below minimum 0.49 volts or above maximum 4.60 volts?**
		Yes	ISOLATE fault and SERVICE as necessary.
			RECONNECT all components.
			RESET PCM to completely clear DTCs.
			☞ After Repair Procedure
			COMPLETE OBD II Drive Mode.
			RERUN OBD Test.

		No	Unable to duplicate and/or identify fault at this time. Intermittent poor connection or component malfunction (REPAIR or REPLACE as necessary). Go to ENGINE SYMPTOM TROUBLESHOOTING No.27.

DTC P1127	Exhaust system too cool
DESCRIPTION	• DTC P1127 indicates oxygen sensor heater was not on during key on engine running (KOER) self-test. Accurate testing of oxygen sensor heater is energized when certain temperature criteria is met. Heater will energize based on exhaust temperature modeling, which allows for upstream heaters being energized independent of downstream heaters

[Possible Cause]
- Exhaust system too cool

STEP	INSPECTION		ACTION

1	CHECK HEATED OXYGEN SENSOR HEATER RELATED PIDS
	• Key off.
	• NGS tester connected.
	• Key on, engine on.
	• Access all heated oxygen sensor heater related PID's.
	  • HTR11
	  • HTR21
	  • HTR12
	  • HTR13
	• **Do all PID indicate on?**
		Yes	RERUN OBD Test.
			SERVICE any other DTC as necessary.

		No	RUN engine until all PIDs indicate ON. RERUN OBD Test. SERVICE any other DTC.

DTC P1250	Pressure regulator control (PRC) solenoid valve circuit malfunction
DESCRIPTION	• DTC P1250 indicates fuel pressure regulator control solenoid (PRC) valve circuit malfunction

[Possible Cause]
- Damaged fuel pressure regulator control (PRC) solenoid valve
- Open or shorted circuit
- Damaged PCM

STEP	INSPECTION		ACTION
1	CHECK FOR POWER CIRCUIT TO PRC SOLENOID VALVE • Disconnect PRC solenoid valve connector. • Key on, engine off. • Measure voltage between power circuit at PRC solenoid valve connector and chassis ground. • **Is voltage greater than 10.5 volts?**	Yes	Go to next step.
		No	SERVICE open in power circuit between ignition switch and PRC solenoid valve.
2	CHECK PRC SOLENOID VALVE • Key off. • PRC solenoid valve disconnected. • Measure resistance of terminals at PRC solenoid valve. • **Is resistance less than 5.0 ohms?**	Yes	Go to next step.
		No	REPLACE PRC solenoid valve. RERUN OBD Test.
3	CHECK PRC SOLENOID VALVE CIRCUIT FOR SHORT TO POWER CIRCUIT • Key off. • PRC solenoid valve disconnected. • Disconnect PCM. Inspect for damaged or pushed out pins, corrosion, loose wires, etc. Service as necessary. • Install breakout box. Leave PCM disconnected. • Key on, engine off. • Measure voltage between Test Pin 19 (PRC) at breakout box and chassis ground. • **Is voltage less than 1.0 volt?**	Yes	Go to next step.
		No	SERVICE short to power. REMOVE breakout box. RECONNECT all components. RERUN OBD Test.
4	CHECK PRC SOLENOID VALVE CIRCUIT FOR SHORT TO GROUND • Key off. • Disconnect NGS tester from DLC. • Breakout box installed. • PCM disconnected. • PRC solenoid valve disconnected. • Measure resistance between Test Pin 19 and Test Pins 51 or 103 at breakout box. • **Is resistance greater than 10,000 ohms?**	Yes	Go to next step.
		No	SERVICE short circuit. REMOVE breakout box. RECONNECT all components. RERUN OBD Test.
5	CHECK PRC SOLENOID VALVE CIRCUIT CONTINUITY • Key off. • Breakout box installed. • PCM disconnected. • PRC solenoid valve disconnected. • Measure resistance between PRC solenoid valve circuit at PRC solenoid vehicle harness connector and Test Pin 19 at breakout box. • **Is resistance less than 5.0 ohms?**	Yes	REPLACE PCM. RECONNECT all components. RERUN OBD Test.
		No	SERVICE open circuit. REMOVE breakout box. RECONNECT all components. RERUN OBD Test.

DTC P1409	EGR valve (Stepper motor) malfunction
DESCRIPTION	• Open or short circuit is observed in EGR valve

[Possible Cause]
- Damaged EGR valve coil
- EGR valve control signal circuit open
- EGR valve control signal circuit short to ground
- EGR valve power circuit open

STEP	INSPECTION		ACTION
1	CHECK CONNECTOR CONNECTION • Check for connection of EGR valve and PCM. • **Is connection okay?**	Yes	Go to next step.
		No	SERVICE as necessary. RESET PCM to completely clear DTCs. ☞ After Repair Procedure COMPLETE OBD II Drive Mode. RERUN OBD Test.
2	CHECK EGR VALVE POWER CIRCUIT VOLTAGE • Key off. • Disconnect EGR valve. • Key on, engine off. • Measure voltage between power circuit at EGR valve harness connector and battery negative post. • **Is each voltage greater than 10.5 volts?**	Yes	Go to next step.
		No	SERVICE open power circuit. Reconnect all components. RESET PCM to completely clear DTCs. ☞ After Repair Procedure COMPLETE OBD II Drive Mode. RERUN OBD Test.

3	CHECK EGR VALVE CONTROL SIGNAL CIRCUIT SHORT TO GROUND
	• Key off.
	• EGR valve disconnected.
	• Disconnect PCM. Inspect for damaged or pushed out pins, corrosion, loose wires, etc. Service as necessary.
	• Measure resistance between following terminals EGR valve connector and battery negative post.
	  • Test Pin 68
	  • Test Pin 72
	  • Test Pin 46
	  • Test Pin 56
	• **Is each resistance greater than 10,000 ohms?**
		Yes	EGR valve control signal circuit harness circuits to PCM is okay.
			Go to next step.

		No	SERVICE short circuit between EGR valve control signal circuit. RESET PCM to completely clear DTCs. ☞ After Repair Procedure COMPLETE OBD II Drive Mode. RERUN OBD Test.

4	CHECK CONTINUITY EGR VALVE CONTROL SIGNAL CIRCUIT OPEN
	• Key off.
	• EGR valve disconnected.
	• Breakout box installed, PCM disconnected.
	• Measure resistance between appropriate Test Pin at breakout box and EGR valve terminal at connector.
	  • EGR valve terminal E–Test Pin 68
	  • EGR valve terminal A–Test Pin 72
	  • EGR valve terminal B–Test Pin 46
	  • EGR valve terminal F–Test Pin 56
	• **Is each resistance less than 5.0 ohms?**
		Yes	EGR valve control signal harness circuits to PCM is okay.
			SERVICE EGR valve.
			☞ 01–16B EGR VALVE INSPECTION [KL].
			RESET PCM to completely clear DTCs.
			☞ After Repair Procedure
			COMPLETE OBD II Drive Mode.
			RERUN OBD Test.

		No	SERVICE open in EGR valve control signal circuit harness circuit. RECONNECT all components. RESET PCM to completely clear DTCs. ☞ After Repair Procedure COMPLETE OBD II Drive Mode. RERUN OBD Test.

DTC P1410	EGR boost solenoid valve stuck
DESCRIPTION	• Deference of EGR boost pressure and atmospheric pressure is out of self-test range

[Possible Cause]

- Connection of hose between intake manifold and EGR boost solenoid is not properly
- Connection of hose between EGR boost sensor and EGR boost solenoid is not properly
- Air leaks after MAF sensor
- Open or short to EGR boost solenoid circuit
- Damaged EGR boost solenoid valve
- Damaged EGR boost sensor
- Damaged PCM

STEP	INSPECTION		ACTION
1	VISUAL CHECKS • Check intake air system for leaks, obstructions and damage. • Check air cleaner element, air cleaner housing for blockage. • Verify integrity of positive crankcase ventilation (PCV) system. • Check for vacuum leaks. • Check connection of hose between EGR boost solenoid valve and intake manifold. • Check connection of hose between EGR boost solenoid valve and EGR boost sensor. • **Are any of above concerns present?**	Yes	SERVICE as necessary. RESET PCM to completely clear DTCs. ☞ After Repair Procedure COMPLETE OBD II Drive Mode. RERUN OBD Test.
		No	Go to next step.
2	PERFORM CONTINUOUS MEMORY SELF-TEST • Key off. • Connect NGS tester. • Perform continuous memory self-test. • **Are any continuous memory DTCs displayed?**	Yes	Go to appropriate DTC test.
		No	Go to next step.
3	PERFORM KOEO SELF-TEST • Key off. • NGS tester connected. • Key on, engine off. • Perform KOEO self-test. • **Are any KOEO DTCs displayed?**	Yes	Go to appropriate DTC test.
		No	Go to next step.
4	PERFORM KOER SELF-TEST • Key off. • NGS tester connected. • Key on, engine running. • Perform KOER self-test. • **Are any KOER DTCs displayed?**	Yes	Go to appropriate DTC test.
		No	Go to next step.
5	CHECK FOR POWER CIRCUIT TO EGR BOOST SOLENOID VALVE • Disconnect EGR boost solenoid valve connector. • Key on, engine off. • Measure voltage between power circuit at EGR boost solenoid valve vehicle harness connector and chassis ground. • **Is voltage greater than 10.5 volts?**	Yes	Go to next step.
		No	SERVICE open in POWER circuit between ignition switch and EGR boost solenoid valve. RESET PCM to completely clear DTCs. ☞ After Repair Procedure COMPLETE OBD II Drive Mode. RERUN OBD Test.
6	CHECK EGR BOOST SOLENOID VALVE • Key off. • EGR boost solenoid valve disconnected. • Measure resistance between terminals A and B at EGR boost solenoid valve. • **Is resistance less than 5.0 ohms?**	Yes	Go to next step.
		No	REPLACE EGR boost solenoid valve. RECONNECT all components. RESET PCM to completely clear DTCs. ☞ After Repair Procedure COMPLETE OBD II Drive Mode. RERUN OBD Test.

STEP	INSPECTION		ACTION
7	CHECK EGR BOOST SOLENOID VALVE CIRCUIT FOR SHORT TO POWER • Key off. • EGR boost solenoid valve disconnected. • Disconnect PCM. Inspect for damaged or pushed out pins, corrosion, loose wires, etc. Service as necessary. • Install breakout box. Leave PCM disconnected. • Key on, engine off. • Measure voltage between Test Pin 98 at breakout box and chassis ground. • **Is voltage less than 1.0 volts?**	Yes	Go to next step.
		No	SERVICE short to power. REMOVE breakout box. RECONNECT all components. RESET PCM to completely clear DTCs. ☞ After Repair Procedure COMPLETE OBD II Drive Mode. RERUN OBD Test.
8	CHECK EGR BOOST SOLENOID VALVE CIRCUIT SHORT TO GROUND • Key off. • Disconnect NGS tester from DLC. • Breakout box installed. PCM disconnected. • EGR boost solenoid valve disconnected. • Measure resistance between Test Pin 98 and Test Pin 51 or 103 and 91 at breakout box. • **Is resistance greater than 10,000 ohms?**	Yes	Go to next step.
		No	SERVICE short circuit. REMOVE breakout box. RECONNECT all components. RESET PCM to completely clear DTCs. ☞ After Repair Procedure COMPLETE OBD II Drive Mode. RERUN OBD Test.
9	CHECK EGR BOOST SOLENOID VALVE CIRCUIT CONTINUITY • Key off. • Breakout box installed. PCM disconnected. • EGR boost solenoid disconnected. • Measure resistance between EGR boost solenoid valve circuit at EGR boost solenoid valve connector Test Pin 98 at breakout box. • **Is resistance less than 5.0 ohms?**	Yes	Go to next step.
		No	SERVICE open circuit. REMOVE breakout box. RECONNECT all components. RESET PCM to completely clear DTCs. ☞ After Repair Procedure COMPLETE OBD II Drive Mode. RERUN OBD Test.
10	CHECK EGR BOOST SENSOR CONSTANT VOLTAGE • Key on, engine off. • EGR boost sensor disconnected. • Measure voltage between constant voltage and ground circuits at EGR boost sensor harness connector. • Key off. • **Is voltage between 4.0 and 6.0 volts?**	Yes	Go to next step.
		No	REPAIR open in constant voltage circuit.
11	CHECK CONTINUITY OF EGR BOOST SENSOR HARNESS CIRCUIT • Key off. • EGR boost sensor disconnected. • Disconnect PCM. Inspect for damaged pushed out pins, corrosion, loose wires, etc. Service as necessary. • Install breakout box. Leave PCM disconnected. • Measure resistance between EGR boost sensor signal circuit at EGR boost solenoid harness connector and Test Pin 34 at breakout box. • Measure resistance between EGR boost sensor ground circuit at EGR boost sensor harness connector and Test Pin 91 at breakout box. • **Is each resistance less than 5.0 ohms?**	Yes	Go to next step.
		No	SERVICE open in appropriate circuit. RESET PCM to completely clear DTCs. ☞ After Repair Procedure COMPLETE OBD II Drive Mode. RERUN OBD Test. Confirm repair by performing by EGR portion of OBD II Drive Mode to check for DTCs.

STEP	INSPECTION		ACTION
12	CHECK EGR BOOST SENSOR SIGNAL CIRCUIT FOR SHORT TO GROUND AND POWER • Key off. • EGR boost sensor disconnected. • Breakout box installed. PCM disconnected. • Measure resistance between Test Pin 34 and test Pin 91, 51 and 103 at breakout box. • Measure resistance between Test pin 34 and Test Pin 71, 90 and 97 at breakout box. • **Is resistance greater than 10,000 ohms?**	Yes	Go to next step.
		No	SERVICE short in EGR boost sensor signal circuit. REMOVE breakout box. RECONNECT all components. RESET PCM to completely clear DTCs. ☞ After Repair Procedure COMPLETE OBD II Drive Mode. RERUN OBD Test. Confirm repair by performing by EGR portion of OBD II Drive Mode to check for DTCs.
13	CHECK EGR VALVE POWER CIRCUIT VOLTAGE • Key off. • Disconnect EGR valve. • Key on, engine off. • Measure voltage between power circuit at EGR valve harness connector C or D and battery negative post. • **Is each voltage greater than 10.5 volts?**	Yes	Power harness circuit from main relay to EGR is okay. Go to next step.
		No	SERVICE open power circuit. Reconnect all components. RESET PCM to completely clear DTCs. ☞ After Repair Procedure COMPLETE OBD II Drive Mode. RERUN OBD Test. Confirm repair by performing by EGR portion of OBD II Drive Mode to check for DTCs.
14	CHECK EGR CONTROL SIGNAL CIRCUIT SHORT TO GROUND • Key off. • EGR valve disconnected. • Disconnect PCM. • Measure resistance between following terminals EGR valve connector and battery negative post. • Test Pin 68 • Test Pin 72 • Test Pin 46 • Test Pin 56 • **Is each resistance greater than 10,000 ohms?**	Yes	EGR valve control signal harness circuit to PCM is okay. Go to next step.
		No	SERVICE short circuit between EGR valve control signal circuit. RESET PCM to completely clear DTCs. ☞ After Repair Procedure COMPLETE OBD II Drive Mode. RERUN OBD Test. Confirm repair by performing by EGR portion of OBD II Drive Mode to check for DTCs.
15	CHECK CONTINUITY EGR VALVE CONTROL SIGNAL CIRCUIT OPEN • Key off. • EGR valve disconnected. • Breakout box installed. PCM disconnected. • Measure voltage between appropriate Test Pin at breakout box and EGR valve terminal at harness connector. • EGR valve terminal E–Test Pin 68 • EGR valve terminal A–Test Pin 72 • EGR valve terminal B–Test Pin 46 • EGR valve terminal F–Test Pin 56 • **Is each resistance less than 5.0 ohms?**	Yes	EGR valve control signal circuits are okay. Service EGR valve. ☞ 01–16A EGR VALVE INSPECTION [FS]
		No	SERVICE open in EGR valve control signal circuit harness. RECONNECT all components. RESET PCM to completely clear DTCs. ☞ After Repair Procedure COMPLETE OBD II Drive Mode. RERUN OBD Test. Confirm repair by performing by EGR portion of OBD II Drive Mode to check for DTCs.

DTC P1450	Evaporative emission control system unable to bleed up fuel tank vacuum
DESCRIPTION	• DTC P1450 indicates that self-test has detected Evaporative Emission Control System is unable to bleed up fuel tank vacuum

[Possible Cause]
- Contaminated filter on purge solenoid valve
- Damaged purge solenoid valve
- Constant voltage circuit open between fuel tank pressure (FTP) sensor and PCM
- Damaged FTP sensor

STEP	INSPECTION		ACTION
1	CHECK PURGE SOLENOID VALVE • Key off. • Remove vacuum line from input vacuum port to intake manifold on control vacuum solenoid part of purge solenoid valve. • Apply 33 kPa {0.33 kgf/cm^2, 210 inHg} of vacuum with hand-held vacuum pump to open port on solenoid part of purge solenoid valve. • **Does vacuum to solenoid on purge solenoid valve release rapidly?**	Yes	REMOVE vacuum pump. RECONNECT all components. Go to next step.
		No	SERVICE purge solenoid valve. If unable to repair filter, REPLACE damaged purge solenoid valve. REMOVE vacuum pump. RECONNECT all components. RESET PCM to completely clear DTCs. ☞ After Repair Procedure COMPLETE OBD II Drive Mode. RERUN OBD Test.
2	CHECK PURGE SOLENOID VALVE RESISTANCE • Key off. • Purge solenoid valve disconnected. • Measure resistance between purge solenoid valve and power circuit on purge solenoid valve. • **Is resistance between 30 and 36 ohms?**	Yes	Go to next step.
		No	REPLACE damaged purge solenoid valve. RESET PCM to completely clear DTCs. ☞ After Repair Procedure COMPLETE OBD II Drive Mode. RERUN OBD Test.
3	CHECK PURGE SOLENOID VALVE CIRCUIT FOR SHORT TO GROUND CIRCUIT • Key off. • Purge solenoid valve disconnected. • Breakout box installed. • PCM disconnected. • Disconnect NGS tester from DLC. • Measure resistance between Test Pin 67 and Test Pins 24 and 103 at breakout box. • **Is each resistance greater than 10,000 ohms?**	Yes	Go to next step.
		No	SERVICE harness short between purge solenoid valve and ground circuit. REMOVE breakout box. RECONNECT all components. RESET PCM to completely clear DTCs. ☞ After Repair Procedure COMPLETE OBD II Drive Mode. RERUN OBD Test.
4	VISUAL CHECK OF CONSTANT VOLTAGE CIRCUIT CONNECTIONS AT FUEL TANK PRESSURE SENSOR AND PCM • Key off. • Observe constant voltage circuit at both FTP sensor and PCM connectors. • **Does constant voltage circuit appear to be connected at both FTP sensor and PCM?**	Yes	Go to next step.
		No	SERVICE as necessary. RESET PCM to completely clear DTCs. ☞ After Repair Procedure COMPLETE OBD II Drive Mode. RERUN OBD Test.
5	CHECK RESISTANCE OF CONSTANT VOLTAGE CIRCUIT AT FTP SENSOR • Key off. • Disconnect FTP sensor. • Disconnect PCM. Inspect for damaged or pushed out pins, corrosion and loose wires. Service as necessary. • Install breakout box. Leave PCM disconnected. • Measure resistance between Test Pin 90 at breakout box and constant voltage circuit at FTP sensor vehicle harness connector. • **Is resistance less than 5.0 ohms?**	Yes	Constant voltage is open in FTP sensor. REPLACE damaged FTP sensor. REMOVE breakout box. RECONNECT all components. RESET PCM to completely clear DTCs. ☞ After Repair Procedure COMPLETE OBD II Drive Mode. RERUN OBD Test.
		No	SERVICE open in constant voltage harness to FTP sensor. REMOVE breakout box. RECONNECT all components. RESET PCM to completely clear DTCs. ☞ After Repair Procedure COMPLETE OBD II Drive Mode. RERUN OBD Test.

DTC P1451	Canister drain cut valve (CDCV) malfunction
DESCRIPTION	• DTC P1451 indicates that self-test has detected Canister Drain Cut Valve (CDCV) circuit failure.

[Possible Cause]

- Damaged fuel tank pressure (FTP) sensor
- Kinks or blockage in fuel vapor hose/tube between fuel tank, purge solenoid valve and fuel vapor storage canister(s) or between fuel vapor storage canister(s), CDCV and atmosphere
- Power circuit circuit open
- CDCV circuit open
- CDCV circuit shorted to ground circuit
- CDCV circuit shorted to power circuit
- Damaged CDCV
- Damaged PCM

STEP	INSPECTION		ACTION
1	CHECK FOR POWER CIRCUIT TO CDCV • Key off. • Disconnected CDCV vehicle harness connector. • Key on, engine off. • Measure voltage between power circuit at CDCV vehicle harness connector and battery ground. • **Is voltage greater than 10.5 volts?**	Yes	Go to next step.
		No	SERVICE open in power circuit harness to CDCV. RECONNECT all components. RESET PCM to completely clear DTCs. ☞ After Repair Procedure COMPLETE OBD II Drive Mode. RERUN OBD Test.
2	CHECK CDCV RESISTANCE • Key off. • Disconnect CDCV connector. • Measure resistance between CDCV and power circuit on CDCV. • **Is resistance between 45 and 65 ohms?**	Yes	Go to next step.
		No	REPLACE damaged CDCV. RECONNECT CDCV. RECORD and REMEMBER this Pinpoint Test Step. Go to step 8. Then RETURN to Pinpoint test Step that directed you here. RESET PCM to completely clear DTCs. ☞ After Repair Procedure COMPLETE OBD II Drive Mode. RERUN OBD Test.
3	CHECK RESISTANCE OF CDCV CIRCUIT • Key off. • Disconnect CDCV and PCM. Inspect for damaged or pushed out pins, corrosion and loose wires. Service as necessary. • Install breakout box. Leave PCM disconnected. • Measure resistance between Test Pin 18 at breakout box and CDCV circuit at CDCV vehicle harness connector. • **Is resistance less than 5.0 ohms?**	Yes	Go to next step.
		No	SERVICE open in CDCV harness. REMOVE breakout box. RECONNECT all components. RESET PCM to completely clear DTCs. ☞ After Repair Procedure COMPLETE OBD II Drive Mode. RERUN OBD Test.
4	CHECK CDCV CIRCUIT FOR SHORT TO GROUND CIRCUIT • Key off. • CDCV disconnected. • Breakout box installed. • PCM disconnected. • Disconnected NGS tester from DLC. • Measure resistance between Test Pin 18 and Test Pins 51 and 103 at breakout box. • **Is resistance greater than 10,000 ohms?**	Yes	RECONNECT NGS tester. Go to next step.
		No	SERVICE harness short between CDCV and ground circuit. REMOVE breakout box. RECONNECT all components. RESET PCM to completely clear DTCs. ☞ After Repair Procedure COMPLETE OBD II Drive Mode. RERUN OBD Test.
5	CHECK CDCV SIGNAL CIRCUIT FOR SHORT TO POWER CIRCUIT • Key off. • CDCV disconnected. • Breakout box installed, PCM disconnected. • Key on, engine off. • Measure voltage between Test Pin 18 at breakout box and chassis ground. • **Is voltage less than 1.0 volts?**	Yes	Go to next step.
		No	SERVICE harness short between CDCV and power circuit (power circuit, constant voltage or chassis ground). RECONNECT all components. RESET PCM to completely clear DTCs. ☞ After Repair Procedure COMPLETE OBD II Drive Mode. RERUN OBD Test.

STEP	INSPECTION		ACTION
6	CHECK CDCV SIGNAL FROM PCM • Key off. • Breakout box installed. • Reconnect PCM to breakout box. • Reconnect CDCV vehicle harness connector. • Connect digital multimeter between Test Pin 18 and Test Pin 51 or 103 at breakout box. • Start engine. • Observe voltage on digital multimeter. • **Is voltage between 10.0 and 14.0 volts?**	Yes	REPLACE damaged CDCV. REMOVE breakout box. RECONNECT all components. RECORD and REMEMBER this Pinpoint Test Step. Go to next step. Then RETURN to Pinpoint Test Step that directed you here. RESET PCM to completely clear DTCs. ☞ After Repair Procedure COMPLETE OBD II Drive Mode. RERUN OBD Test.
		No	REPLACE PCM. REMOVE breakout box. RECONNECT all components. RERUN OBD Test.
7	EVAPORATIVE SYSTEM RE-CHECK • RESET PCM to completely clear DTCs. ☞ After Repair Procedure • COMPLETE OBD II Drive Mode. • **Is MIL illuminated?**	Yes	ISOLATE pressure leak in evaporative emission system (i.e., vacuum/fuel vapor hose connections, cracked/split hoses, damaged components). SERVICE as necessary. VERIFY symptom no longer exists. RESET PCM to completely clear DTCs. ☞ After Repair Procedure COMPLETE OBD II Drive Mode. RERUN OBD Test.
		No	RETURN to Action to Take column of Pinpoint Test Step that directed you here.

DTC P1460	Wide open throttle air conditioning cutoff circuit malfunction
DESCRIPTION	• Key on engine off (KOEO), key on engine running (KOER) DTC P1460 indicates an A/C relay primary circuit fault

[Possible Cause]
- Open or shorted circuit
- Damaged A/C relay
- Damaged PCM

STEP	INSPECTION		ACTION
1	CHECK FOR IGNITION SWITCH (IG1) VOLTAGE TO A/C RELAY **Note** • Verify A/C and defrost were off during KOEO and KOER Self-Tests. • Key off. • Disconnect A/C relay. • Key on. • Measure voltage between ignition switch (IG1) circuit at A/C relay vehicle harness connector and chassis ground. • **Is voltage greater than 10.5 volts?**	Yes	Go to next step.
		No	VERIFY condition of related fuses. If okay, SERVICE open circuit. RECONNECT all components. RERUN OBD Test.

2	CHECK A/C RELAY
	• Key off.
	• A/C relay disconnected.
	• Check A/C relay coil resistance:
	  • Measure resistance A/C relay coil circuit and ignition switch (IG1) pin at A/C relay.
	  • Resistance should be between 50 and 100 ohms.
	• Check A/C relay for internal shorts:
	  • Measure resistance between A/C relay coil circuit pin and following pins at A/C relay: B+, power-to-clutch, ground.
	  • Resistances should be greater than 10,000 ohms.
	• **Are all resistance checks okay?**
		Yes	Go to next step.

		No	REPLACE A/C relay. RECONNECT all components. RERUN OBD Test.

STEP	INSPECTION		ACTION
3	CHECK A/C RELAY CIRCUIT FOR SHORT TO POWER • Key off. • A/C relay disconnected. • Disconnect PCM. Inspect for damaged or pushed out pins, corrosion, loose wire, etc. Service as necessary. • Install breakout box. Leave PCM disconnected. • Key on, engine off. • Measure voltage between Test Pin 69 at breakout box and chassis ground. • **Is voltage less than 1.0 volt?**	Yes	Go to next step.
		No	SERVICE short to power. REMOVE breakout box. RECONNECT all components. START engine and TURN A/C on. WAIT 15 seconds. TURN A/C and key off. RERUN OBD Test.
4	CHECK A/C RELAY CIRCUIT FOR SHORT TO CHASSIS GROUND • Key off. • A/C relay disconnected. • Disconnect NGS tester from DLC. • Breakout box installed. • PCM disconnected. • Measure resistance between Test Pin 69 at breakout box and chassis ground. • **Is resistance greater than 10,000 ohms?**	Yes	Go to next step.
		No	SERVICE short to ground. REMOVE breakout box. RECONNECT all components. START engine and TURN A/C on. WAIT 15 seconds. TURN A/C and key off. RERUN OBD Test.
5	CHECK A/C RELAY CIRCUIT CONTINUITY • Key off. • A/C relay disconnected. • Breakout box installed, PCM disconnected. • Measure resistance between Test Pin 69 at breakout box and A/C RELAY circuit at A/C relay vehicle harness connector. • **Is resistance less than 5.0 ohms?**	Yes	REPLACE PCM. REMOVE breakout box. RECONNECT all components. START engine and TURN A/C on. WAIT 15 seconds. TURN A/C off. RERUN OBD Test.
		No	SERVICE open circuit. REMOVE breakout box. RECONNECT all components. START engine and TURN A/C on. WAIT 15 seconds. TURN A/C off. RERUN OBD Test.

CONTINUOUS DTC P1460	Wide open throttle air conditioning cutoff circuit malfunction
DESCRIPTION	• Continuous Memory DTC P1460 indicates A/C relay primary circuit fault has ocuured during vehicle operation

[Possible Cause]
- Open in ignition switch to A/C relay coil circuit

STEP	INSPECTION		ACTION

1	CHECK A/C RELAY COIL CIRCUIT FOR SHORT TO GROUND
	• Key off.
	• NGS tester connected.
	• Disconnect A/C low pressure switch.
	• Install jumper wire in A/C low pressure switch vehicle harness connector. (to complete circuit)
	• Key on, engine off.
	• A/C switch ON.
	• Check A/C relay coil circuit short to ground while performing following:
	  • Shake, wiggle, bend A/C coil circuit between PCM terminal 69 and A/C relay.
	  • Lightly tap on A/C relay (to simulate road shock).
	• **Is fault indicated?**
		Yes	ISOLATE fault and SERVICE as necessary.
			REMOVE jumper wire.
			RECONNECT all components.
			RESET PCM completely clear DTCs.
			☞ After Repair Procedure
			START engine.
			TURN A/C to ON.
			WAIT 15 seconds.
			A/C off.
			Key off.
			RERUN OBD Test.

		No	Go to next step.

2	CHECK A/C RELAY COIL CIRCUIT FOR OPEN TO POWER
	• Key on, engine off.
	• Jumper wire installed in A/C low pressure switch.
	• A/C ON.
	• NGS tester connected.
	• Access Output Test Mode on NGS tester.
	• Turn output ON.
	• Check A/C relay coil circuit for open in power circuit or ignition switch circuit performing following:
	  • Shake, wiggle, bend A/C coil circuit between PCM terminal 69 and A/C relay.
	  • Shake, wiggle, bend power circuit or ignition switch circuit to A/C relay.
	  • Lightly tap on A/C relay (to simulate road shock).
	• Key off, A/C off.
	• **Is fault indicated?**
		Yes	ISOLATE fault and SERVICE as necessary.
			REMOVE jumper wire.
			RECONNECT all components.
			RESET PCM completely clear DTCs.
			☞ After Repair Procedure
			START engine.
			TURN A/C to ON.
			WAIT 15 seconds.
			A/C off.
			Key off.
			RERUN OBD Test.

		No	Go to ENGINE SYMPTOM TROUBLESHOOTING No. 27.

DTC P1464	Air conditioner (A/C) demand out of self-test range
DESCRIPTION	• DTC P1464 indicates that A/C switch did not turn off during key on engine running (KOER) or, key on engine off (KOEO) self-test

[Possible Cause]
- A/C switch turned on during self-test
- Short to ground in A/C relay Circuit

STEP	INSPECTION		ACTION
1	CHECK FOR KOEO AND KOER SELF-TEST • **Was A/C switch off during KOEO and KOER self-tests?**	Yes	Go to next step.
		No	RERUN KOEO and/or KOER self-test with A/C switch off.
2	CHECK DTC PRESENT • Active Continuous Memory self-test. • **Are any DTCs present?**	Yes	Go to appropriate DTC chart.
		No	Go to next step.

3	CHECK FOR A/C RELAY CIRCUIT
	• Breakout box installed.
	• Key on, engine running.
	• Fan switch in 1st speed.
	• Measure voltage between Test Pin 69 at breakout box and chassis ground.
	  • A/C switch ON: 0 V
	  • A/C switch OFF: 12 V
	• **Are voltages correct?**
		Yes	CHECK A/C relay operation.
			If okay, intermittent poor connection or component malfunction. (REPAIR or REPLACE as necessary).
			Go to ENGINE SYMPTOM TROUBLESHOOTING No.27.
			If okay, REPLACE PCM.

		No	Go to next step.

4	CHECK FOR A/C SWITCH CIRCUIT
	• Measure voltage between Test Pin 41 at breakout box and chassis ground.
	  • A/C switch ON: 0 V
	  • A/C switch OFF: 12 V
	• **Are voltages correct?**
		Yes	Go to next step.

		No	Go to step 6.
5	CHECK CONTINUITY OF A/C RELAY CIRCUIT • Key off. • Disconnect A/C relay and breakout box from PCM (leave breakout box connected to PCM vehicle harness connector). • Measure resistance between Test Pin 69 at breakout box and chassis ground. • **Is resistance greater than 10,000 ohms?**	Yes	Intermittent poor connection or component malfunction between A/C relay and PCM circuit. (REPAIR or REPLACE as necessary).
		No	SERVICE short circuit between A/C relay and PCM. REMOVE breakout box. RECONNECT all components. RERUN OBD Test.
6	CHECK A/C AMPLIFIER • Perform A/C amplifier on vehicle inspection. • **Is A/C amplifier okay?**	Yes	Go to next step.
		No	REPLACE A/C Amplifier.
7	CHECK CONTINUITY OF A/C SWITCH CIRCUIT • Key off. • Disconnect A/C amplifier and breakout box from PCM (leave breakout box connected to PCM vehicle harness connector.) • Measure resistance between Test Pin 41 at breakout box and chassis ground. • **Is resistance greater than 10,000 ohms?**	Yes	Check heater control unit operation. If voltage incorrect, REPLACE heater control unit. If voltage correct, REPLACE PCM.
		No	SERVICE short circuit between A/C amplifier and PCM. REMOVE breakout box. RECONNECT all components. RERUN OBD Test.

KOEO, KOER P1474 DTC P1479	**Cooling fan control primary circuit malfunction** **Condenser fan control primary circuit malfunction**
DESCRIPTION	• DTC P1474 indicates cooling fan control primary circuit failure. • DTC P1479 indicates condenser fan circuit control primary failure.

[Possible Cause]
- Open or shorted fan, cooling fan control signal or condenser fan control signal circuit
- Open power circuit to fan relay
- Damaged fan relay (cooling fan or condenser fan)
- Damaged PCM

STEP	INSPECTION		ACTION

1	CHECK FOR POWER CIRCUIT TO APPLICABLE FAN RELAY
	
	Note
	• During diagnosis, use chart below to determine correct pin number, circuit and relay being tested.
	  • DTC P1474=PCM terminal 45
	  • DTC P1479=PCM terminal 17
	
	• Key off.
	• Disconnect appropriate fan relay.
	• Key on.
	• Measure voltage between power circuit at applicable fan relay vehicle harness connector and battery negative post.
	• **Is voltage greater than 10.5 volts?**
		Yes	Go to next step.

		No	SERVICE open power circuit to applicable fan relay. RECONNECT fan relay. RERUN OBD Test.
2	CHECK FOR COOLING FAN CONTROL SIGNAL OR CONDENSER FAN CONTROL SIGNAL CIRCUIT CYCLING • Key on, engine off. • Applicable fan relay disconnected. • NGS tester connected. • Access Output Test Mode. • Connect non-powered test lamp between power circuit and cooling fan control signal or condenser fan control signal circuit at applicable fan relay vehicle harness connector. • While observing test lamp, command appropriate cooling fan speed on and off. • **Does test lamp turn on and off when cooling fan output is commanded on and off?**	Yes	Key off. REPLACE appropriate fan relay. RERUN OBD Test.
		No	REPEAT test step to VERIFY results. It test lamp still does not turn on and off as expected, turn key off. REMOVE test lamp. Go to next step.
3	CHECK COOLING FAN CONTROL SIGNAL OR CONDENSER FAN CONTROL SIGNAL CIRCUIT FOR SHORT TO POWER CIRCUIT • Key off. • Applicable fan relay disconnected. • Disconnect PCM. Inspect for damaged or pushed out pins, corrosion and loose wires. Service as necessary. • Key on, engine off. • Measure voltage between cooling fan control signal or condenser fan control signal circuit at applicable fan relay vehicle harness connector and battery negative post. • Key off. • **Was voltage less than 1.0 volt?**	Yes	Go to next step.
		No	SERVICE cooling fan control signal or condenser fan control signal circuit short to power. RECONNECT all components. RERUN OBD Test.

STEP	INSPECTION		ACTION
4	CHECK COOLING FAN RELAY OR CONDENSER FAN RELAY CIRCUIT FOR SHORT TO GROUND • Key off. • Disconnect NGS tester from DLC. • Appropriate fan relay disconnected. • PCM disconnected. • Install breakout box. Leave PCM disconnected. • Measure resistance between appropriate fan circuit Test Pin (45 (cooling fan control signal) or 17 (condenser fan control signal)) and Test Pin 51, 103 and 91 at breakout box. • **Is each resistance greater than 10,000 ohms?**	Yes	Go to next step.
		No	SERVICE fan circuit for short to ground. REMOVE breakout box. RECONNECT all components. RERUN OBD Test.
5	CHECK COOLING FAN CONTROL SIGNAL OR CONDENSER FAN CONTROL SIGNAL CIRCUIT RESISTANCE • Key off. • Appropriate fan relay disconnected. • Breakout box installed. • PCM disconnected. • Measure resistance between appropriate fan circuit Test Pin (45 (cooling fan control signal) or 17 (condenser fan control signal)) at breakout box and appropriate fan relay vehicle harness connector. • **Is resistance less than 5.0 ohms?**	Yes	REPLACE PCM. REMOVE breakout box. RECONNECT all components. RERUN OBD test.
		No	SERVICE open cooling fan relay control or condenser fan relay control circuit. REMOVE breakout box. RECONNECT all components. RERUN OBD Test.

CONTINUOUS DTC P1474	Cooling fan control primary circuit malfunction
DESCRIPTION	• Continuous Memory DTC P1474 indicates cooling fan control circuit failure has occurred during vehicle operation

[Possible Cause]
- Open or short cooling fan control circuit
- Open power circuit cooling fan relay

STEP	INSPECTION		ACTION

1	CHECK COOLING FAN CONTROL CIRCUIT FOR OPEN OR SHORT CIRCUIT
	• Key off.
	• A/C off.
	• NGS tester connected.
	• Disconnect cooling fan connector. Inspect connector for damaged or pushed out pins, corrosion and loose wires. Service as necessary.
	• Connect non-power test lamp between cooling fan operational circuit and ground circuit at vehicle harness connector.
	• Key on, engine off.
	• Access Output Test Mode on NGS tester.
	• Command cooling fan on.
	• Observe test lamp for an indication of fault while performing following (lamp will turn off when fault detected, indicating open or short to power):
	  • Shake, wiggle, bend, cooling fan control circuit PCM 45 terminal and cooling fan relay.
	  • Shake, wiggle, bend, power circuit or ignition switch circuit to cooling fan relay.
	  • Lightly tap on cooling fan relay (to simulate road shock).
	• **Is fault indicated?**
		Yes	Key off.
			ISOLATE fault and SERVICE as necessary.
			RESET PCM to completely clear DTCs.
			☞ After Repair Procedure
			COMPLETE OBD II Drive Mode.
			RERUN OBD test.

		No	Go to next step.

2	CHECK COOLING FAN CONTROL CIRCUIT FOR SHORT TO GROUND
	• Key on, engine off.
	• Cooling fan disconnected. Test lamp installed.
	• NGS tester connected.
	• Command cooling fan off.
	• Observe test lamp for indication of fault while performing following (lamp will turn on when fault is indicated, indicating cooling fan control circuit short to ground):
	  • Shake, wiggle, bend, cooling fan control circuit between PCM and cooling fan relay.
	  • Lightly tap cooling fan relay (to simulate road shock).
	• **Is fault indicated?**
		Yes	ISOLATE fault and service as necessary.
			RESET PCM to completely clear DTCs.
			☞ After Repair Procedure
			COMPLETE OBD II Drive Mode.
			RERUN OBD Test.

		No	Go to ENGINE SYMPTOM TROUBLESHOOTING No. 27.

CONTINUOUS DTC P1479	Condenser fan control primary circuit malfunction
DESCRIPTION	• DTC P1479 indicates condenser fan circuit failure has occurred during vehicle operation

[Possible Cause]
- Open or shorted condenser fan circuit
- Open power circuit to condenser fan

STEP	INSPECTION		ACTION

1	CONTINUOUS MEMORY DTC P1479: CHECK CONDENSER CONTROL SIGNAL FAN CIRCUIT FOR OPEN OR SHORT TO POWER
	• Key off.
	• Turn A/C off.
	• Inspect connectors for damaged or pushed out pins, corrosion, loose wires, etc. Service as necessary.
	• Connect non-powered test lamp between power signal circuit and ground circuit at condenser fan vehicle harness connector.
	• Key on, engine off.
	• Access Output Test Mode.
	• Command condenser fan control on.
	• Observe test lamp for indication of fault while performing following (test lamp will turn off when fault is detected, indicating an open or short to power):
	  • Shake, wiggle and bend condenser fan circuit between PCM and cooling fan relay.
	  • Shake, wiggle and bend power circuit to condenser fan relay.
	  • Lightly tap on condenser fan relay to simulate road shock.
	• **Is fault indicated?**
		Yes	Key off.
			ISOLATE fault and SERVICE as necessary.
			RESET PCM to completely clear DTCs.
			☞ After Repair Procedure
			COMPLETE OBD II Drive Mode.
			RERUN OBD Test.

		No	Go to next step.

2	CHECK FOR CONDENSER FAN CIRCUIT SHORT TO GROUND
	• Key on, engine off.
	• Condenser fan disconnected, test lamp installed.
	• NGS tester connected.
	• Command condenser fan off.
	• Observe test lamp for an indication of fault while performing following (lamp will turn on when fault is detected, indicating an condenser fan control signal circuit short to ground):
	  • Shake, wiggle and bend condenser fan control circuit between PCM and cooling fan relay.
	  • Shake, wiggle and bend power circuit to cooling fan relay.
	  • Lightly tap on condenser fan relay to simulate road shock.
	• Key off.
	• **Is fault indicated?**
		Yes	Isolate fault and service as necessary.
			RESET PCM to completely clear DTCs.
			☞ After Repair Procedure
			COMPLETE OBD II Drive Mode.
			RERUN OBD Test.

		No	Unable to duplicate or identify fault at this time. Intermittent poor connection or component malfunction. (SERVICE or REPLACE as necessary). Go to ENGINE SYMPTOM TROUBLE SHOOTING No.27.

DTC P1487	EGR boost solenoid valve circuit malfunction
DESCRIPTION	• DTC P1487 indicates EGR boost solenoid valve circuit malfunction.

[Possible Cause]
- Damaged EGR boost solenoid valve
- Open or shorted circuit
- Damaged PCM

STEP	INSPECTION		ACTION
1	CHECK FOR POWER TO EGR BOOST SOLENOID VALVE • Disconnect EGR boost solenoid valve connector. • Key on, engine off. • Measure voltage between power circuit at solenoid valve connector and chassis ground. • **Is constant voltage between 4.0 and 6.0 volts?**	Yes	Go to next step.
		No	SERVICE open in EGR boost solenoid valve power circuit between ignition switch and EGR boost solenoid valve. RERUN OBD Test.
2	CHECK EGR BOOST SOLENOID VALVE • Key off. • EGR boost solenoid valve disconnected. • Measure resistance of terminals at EGR boost solenoid valve. • **Is resistance less than 5.0 ohms?**	Yes	Go to next step.
		No	REPLACE EGR boost solenoid valve. RERUN OBD Test.
3	CHECK EGR BOOST SOLENOID VALVE CIRCUIT FOR SHORT TO POWER • Key off. • EGR boost solenoid valve disconnected. • Disconnect PCM. Inspect for damaged or pushed out pins, corrosion, loose wires, etc. Repair as necessary. • Install breakout box. Leave PCM disconnected. • Key on, engine off. • Measure voltage between Test Pin 98 at breakout box and chassis ground. • **Is voltage less than 1.0 volts?**	Yes	Go to next step.
		No	SERVICE short to power. REMOVE breakout box. RECONNECT all components. RERUN OBD Test.
4	CHECK EGR BOOST SOLENOID VALVE CIRCUIT FOR SHORT TO GROUND • Key off. • Disconnect NGS tester from DLC. • Breakout box installed. Leave PCM disconnected. • EGR boost solenoid valve disconnected. • Measure resistance between Test Pin 98 and Test Pin 51 or 103 and 91 at breakout box. • **Is resistance greater than 10,000 ohms?**	Yes	Go to next step.
		No	SERVICE short circuit. REMOVE breakout box. RECONNECT all components. RERUN OBD Test.
5	CHECK EGR BOOST SOLENOID VALVE CIRCUIT CONTINUITY • Key off. • Breakout box installed. • PCM disconnected. • EGR boost solenoid valve disconnected. • Measure resistance between EGR boost solenoid connector signal terminal and Test Pin 98 at breakout box. • **Is resistance less than 5.0 ohms?**	Yes	REPLACE PCM. RECONNECT all components. RERUN OBD Test.
		No	SERVICE open circuit. REMOVE breakout box. RECONNECT all components. RERUN OBD Test.

DTC P1501	Vehicle speed sensor input signal out of self-test range
DESCRIPTION	• DTC P1501 indicates that VSS input signal is out of self-test range. **Note** • When PCM detects VSS input signal any time during key on engine running (KOER) testing, DTC P1501 will be set and testing will abort

[Possible Cause]
- Intermittent VSS input signal from external sources such as ignition wires or charging circuit

STEP	INSPECTION		ACTION
1	CHECK PCM VSS PID FOR INPUT SIGNAL • Start engine and idle in neutral. • Access VSS PID and observe for vehicle speed input to PCM. • Increase engine speed, no higher than 2000 rpm, several times while observing VSS PID. • **Is reading on VSS PID less than 5 km/h {3 mph}?**	Yes	Unable to dupricate or identify fault at this time. RESET PCM to completely clear DTCs. ☞ After Repair Procedure COMPLETE OBD II Drive Mode. RERUN OBD Test. If DTC P1501 still exists. Intermittent poor connection or component malfunction (REPAIR or REPLACE as necessary).
		No	Go to next step.

2	CHECK VSS HARNESS ROUTING
	• Check VSS harness routing
	  • Verify that harness is not routed adjacent to high current wires (i.e, ignition wires or generator wiring.)
	  • Verify VSS harness is shielded and grounded, if applicable.
	  • Check continuity of VSS harness.
	• **Are any problems evident?**
		Yes	SERVICE as necessary.
			RESET PCM to completely clear DTCs.
			☞ After Repair Procedure
			COMPLETE OBD II Drive Mode.

		No	Unable to duplicate or identify fault at this time. Intermittent poor connection or component malfunction (REPAIR or REPLACE as necessary).

DTC P1506	Idle air control (IAC) system overspeed error
DESCRIPTION	• DTC P1506 indicates self-test has detected an IAC system over speed error

[Possible Cause]
- IAC valve circuit short to ground
- IAC valve component stuck open
- Vacuum leak
- Damaged IAC valve component
- Damaged throttle body
- Damaged PCM

STEP	INSPECTION		ACTION

1	CHECK FOR VACUUM LEAKS
	• Key on, engine running.
	• With engine at idle, listen for vacuum leaks.
	• Inspect entire air inlet system from Mass Air Flow (MAF) sensor to intake manifold for damage or leaks such as:
	  • Cracked or punctured inlet air tube
	  • Loose air inlet tube at air cleaner housing or throttle body
	  • IAC valve component or gasket seal
	  • Intake manifold assembly or gasket seal
	  • EGR valve gasket seal
	  • Vacuum supply connectors and hose
	  • Positive crankcase ventilation (PCV) valve connectors and hose
	• **Are any leaks detected in above areas?**
		Yes	SERVICE as necessary.
			RECONNECT all components.
			RESET PCM to completely clear DTCs.
			☞ After Repair Procedure
			COMPLETE OBD II Drive Mode.
			RERUN OBD Test.

		No	Go to next step.
2	CHECK EVAP SYSTEM FOR STUCK OPEN PURGE SOLENOID VALVE • Key off. • Disconnect hoses at purge solenoid valve. • Connect hand vacuum pump to port at solenoid valve. • Connect hand vacuum pump to either port if equipped with solenoid valve. • Apply –53 kPa {–406 mmHg, –16 inHg} of vacuum to purge solenoid valve. • **Does purge solenoid valve hold vacuum for 20 seconds?**	Yes	RECONNECT all components. Go to next step.
		No	REPLACE purge solenoid valve. RECONNECT all components. RESET PCM to completely clear DTCs. ☞ After Repair Procedure COMPLETE OBD II Drive Mode. RERUN OBD Test.

STEP	INSPECTION		ACTION
3	CHECK EVAP SYSTEM FOR STUCK OPEN VALVE • Key off. • Disconnect hoses at purge solenoid valve. • Connect vacuum pump to charcoal canister at purge solenoid valve. • Apply –5.3 kPa {–406 mmHg, –16 inHg} of vacuum to purge solenoid valve. • **Does purge solenoid valve hold vacuum for 20 seconds?**	Yes	Go to next step.
		No	REPLACE purge solenoid valve. RECONNECT all components. RESET PCM to completely clear DTCs. ☞ After Repair Procedure COMPLETE OBD II Drive Mode. RERUN OBD Test.
4	CHECK IAC VALVE ASSEMBLY FOR PROPER FUNCTION • Key on, engine running. • Bring engine to normal operating temperature. • Transaxle in Park or Neutral. • Disconnect IAC valve assembly connector. • **Does RPM drop or engine stall?**	Yes	Go to next step.
		No	INSPECT throttle body for damage or defect. SERVICE as necessary. If okay, REPLACE IAC valve assembly. RESET PCM to completely clear DTCs. ☞ After Repair Procedure COMPLETE OBD II Drive Mode. RERUN OBD Test.
5	CHECK IAC VALVE CIRCUIT FOR SHORT TO GND • Key off. • Disconnect NGS tester from DLC. • IAC valve disconnected. • Disconnect PCM. Inspect for damaged or pushed out pins, corrosion, loose wires, etc. Service as necessary. • Measure resistance between Test Pin 83 and Test Pins 51 and 103 at breakout box. • **Is each resistance greater than 10,000 ohms?**	Yes	**For Fast Idle Symptom currently present:** REPLACE PCM. REMOVE breakout box. RECONNECT all components. RERUN OBD Test. **All others:** RECONNECT all components. Go to next step.
		No	SERVICE short circuit. RECONNECT all components. RERUN OBD Test.

6	CHECK IAC SYSTEM FOR INTERMITTENT OPEN OR SHORT
	• NGS tester connected.
	• Key on, engine running.
	• Access IAC and RPM PIDs.
	• With engine at normal operating temperature and all accessories off and at idle, IAC duty cycle should between 20% and 40%.
	• Observe IAC and RPM PIDs for indication of fault while performing following at idle:
	  • Lightly tap on IAC valve assembly and wiggle harness connector to simulate road shock
	  • Grasp vehicle harness closest to IAC valve assembly. Shake and bend small section of harness from IAC valve to dash panel and from dash panel to PCM
	• **Do IAC or RPM PIDs suddenly change in valve indicating fault?**
		Yes	ISOLATE fault and SERVICE as necessary.
			RECONNECT all components.
			RESET PCM to completely clear DTCs.
			☞ After Repair Procedure
			COMPLETE OBD II Drive Mode.

		No	**For idle quality, starting, or stalling symptoms currently present:** REPLACE IAC valve assembly. RECONNECT all components. RESET PCM to completely clear DTCs. ☞ After Repair Procedure COMPLETE OBD II Drive Mode. **Others:** Unable to duplicate and/or identify fault at this time. Intermittent poor connection or component malfunction (REPAIR or REPLACE as necessary). Go to ENGINE SYMPTOM TROUBLESHOOTING No.27.

DTC P1602	Immobilizer unit (IU) — PCM communication error
DESCRIPTION	• Command transmission from PCM to IU exceed limit • No response from IU

[Possible Cause]
- Defective wiring harness
- Defective IU
- Defective PCM
- Defective coil
- Defective key (transponder)

STEP	INSPECTION		ACTION
1	CHECK DTC PRESENT • RESET PCM to completely clear DTCs. ☞ After Repair Procedure • RERUN OBD test. • **Is same DTC present after cranking?**	Yes	Go to next step.
		No	Different DTC displayed: Go to appropriate DTC inspection. No DTC displayed: Troubleshooting is completed.
2	CHECK IMMOBILIZER SYSTEM DTC PRESENT • **Does security light indicate DTC 01?**	Yes	Go to DTC 01 inspection.
		No	Go to next step.
3	CHECK IMMOBILIZER SYSTEM DTC PRESENT • **Does security light indicate DTC 03?**	Yes	Go to DTC 03 inspection.
		No	Go to next step.
4	CHECK IMMOBILIZER SYSTEM DTC PRESENT • **Is other DTC present except P1624?**	Yes	Go to other DTC inspection.
		No	Go to next step.
5	CHECK WIRING HARNESS OPEN CIRCUIT • Check for wiring harness open circuit with IU connector disconnected: • IU (A) – PCM (5) • IU (C) – Ground • IU (J) – Battery • IU (L) – Ignition switch (black/white) • **Is there open circuit?**	Yes	Repair wiring harness.
		No	Go to next step.
6	CHECK WIRING HARNESS SHORT CIRCUIT • Check for wiring harness short circuit with IU connector disconnected: • IU (A) – PCM (5) • IU (F) – Coil (yellow) • IU (D) – Coil (green) • **Is there short circuit?**	Yes	Repair wiring harness.
		No	Replace IU and reprogram immobilizer system. ☞ 09–14 IMMOBILIZER SYSTEM REPROGRAMMING PROCEDURE, Immobilizer Replacement Go to next step.
7	CHECK DTC REPRESENT • **Does engine start after replacing IU and clearing DTC?**	Yes	Troubleshooting is completed.
		No	Replace PCM and reprogram immobilizer system. ☞ 09–14 IMMOBILIZER SYSTEM REPROGRAMMING PROCEDURE, PCM Replacement

DTC P1603 P1604	Code word unregistered in PCM Key ID numbers unregistered in PCM
DESCRIPTION	• Code word is not registered in PCM. (P1603) • Key ID numbers are not registered in PCM. (P1604)

[Possible Cause]
- Immobilizer system reprogram procedure was not performed correctly after replacing PCM.

STEP	INSPECTION		ACTION
1	CHECK DTC PRESENT • RESET PCM to completely clear DTCs. ☞ After Repair Procedure • RERUN OBD test. • **Is same DTC present after cranking?**	Yes	Perform reprogram procedure again. ☞ 09–14 IMMOBILIZER SYSTEM REPROGRAMMING PROCEDURE, PCM Replacement
		No	Troubleshooting is completed.

DTC P1621	Code word does not match after engine cranking
DESCRIPTION	• Code word stored in PCM and Immobilizer unit does not match.

[Possible Cause]
- Transformation of code word stored in Immobilizer unit.
- Transformation of code word stored in PCM.

STEP	INSPECTION		ACTION
1	CHECK DTC PRESENT • RESET PCM to completely clear DTCs. ☞ After Repair Procedure • RERUN OBD test. • **Is same DTC present after cranking?**	Yes	Go to next step.
		No	Different DTC displayed: Go to appropriate DTC inspection. No DTC displayed: Troubleshooting is completed.
2	CHECK DTC P1602 PRESENT • **Does P1602 present?**	Yes	Go to DTC P1603 inspection.
		No	Replace IU and reprogram immobilizer system. ☞ 09–14 IMMOBILIZER SYSTEM REPROGRAMMING PROCEDURE, Immobilizer Replacement Go to next step.
3	CHECK DTC REPRESENT • **Does engine start after replacing IU and clearing DTC?**	Yes	Troubleshooting is completed.
		No	Replace PCM and reprogram immobilizer system. ☞ 09–14 IMMOBILIZER SYSTEM REPROGRAMMING PROCEDURE, PCM Replacement

DTC P1622	Key ID number does not match
DESCRIPTION	• ID number stored in immobilizer unit (IU) and PCM does not match. This DTC is indicated only after immobilizer unit is replaced and reprogramming system.

[Possible Cause]
- Unregistered key is used in step 3 of immobilizer system reprogram procedure (IU replacement).
- Transformation of key ID number stored in PCM.

STEP	INSPECTION		ACTION
1	CHECK DTC PRESENT • RESET PCM to completely clear DTCs. ☞ After Repair Procedure • RERUN OBD test. • **Is same DTC present after cranking?**	Yes	Go to next step.
		No	Different DTC displayed: Go to appropriate DTC inspection. No DTC displayed: Troubleshooting is completed.
2	CHECK ENGINE IS STARTING NORMALLY USING ANOTHER REGISTERED KEY • **Does engine start with another registered key?**	Yes	Previous key is defective. Discard it.
		No	Replace PCM and reprogram immobilizer system. ☞ 09–14 IMMOBILIZER SYSTEM REPROGRAMMING PROCEDURE, PCM Replacement

Note
- Do not use PCM on other vehicle for testing. Diagnostic trouble code No. P1622 will be displayed again.

DTC P1623	Code word or key ID number write/read error in PCM
DESCRIPTION	• PCM internal EEPROM damaged

[Possible Cause]
- PCM internal EEPROM damaged

STEP	INSPECTION		ACTION
1	CHECK DTC PRESENT • RESET PCM to completely clear DTCs. ☞ After Repair Procedure • RERUN OBD test. • **Is same DTC present after cranking?**	Yes	Replace PCM and reprogram immobilizer system. ☞ 09–14 IMMOBILIZER SYSTEM REPROGRAMMING PROCEDURE, PCM Replacement
		No	Different DTC displayed: Go to appropriate DTC inspection. No DTC displayed: Troubleshooting is completed.

DTC P1624	Immobilizer system communication counter = 0
DESCRIPTION	• PCM detected immobilizer system malfunction more than three times.

[Possible Cause]
- Engine was attempted to start more than three times under malfunction.

STEP	INSPECTION		ACTION
1	CHECK DTC P1624 PRESENT • RESET PCM to completely clear. DTCs ☞ After Repair Procedure • RERUN OBD test. • **Is P1624 still present after cranking?**	Yes	Go to next step.
		No	Troubleshooting is completed.
2	CHECK DTC PRESENT • **Is there another DTC.?**	Yes	Go to other DTC inspection.
		No	Go to ENGINE SYMPTOM TROUBLESHOOTING No.5.

DTC P1650	Power steering pressure (PSP) switch out of self-test range
DESCRIPTION	• DTC P1650 indicates PSP signal is out of self-test range

[Possible Cause]
- PSP switch/shorting bar damaged
- PSP switch circuit open or shorted to GND
- PCM damaged

STEP	INSPECTION		ACTION
1	VERIFY ELECTRICAL FUNCTION • Key on, engine running. • View PSP PID while turning steering wheel back and forth. • **Does PSP PID indicate voltage Low/High or High/Low?**	Yes	Intermittent poor connection or component malfunction (REPAIR or REPLACE as necessary).
		No	Go to next step.
2	CHECK PSP SWITCH OPERATION • Key off. • Start engine and let idle in Park/Neutral. • Install dwell tacho tester. • Disconnect PSP switch connector and inspect end for damage. Service as necessary. • Jumper PSP signal circuit to ground at PSP connector. • **Does engine rpm increase?**	Yes	REPLACE PSP switch. VERIFY repair.
		No	REMOVE jumper. Go to next step.
3	CHECK CONTINUITY OF PSP CIRCUITS • Key off. • PSP switch disconnected. • Disconnect PCM. Inspect for damaged or pushed out pins, corrosion, loose wires, etc. Service as necessary. • Install breakout box. Leave PCM disconnected. • Measure resistance between Test Pin 31 at breakout box and PSP circuit at PSP switch connector. • **Is each resistance less than 5.0 ohms?**	Yes	Go to next step.
		No	SERVICE open circuit. REMOVE breakout box. RECONNECT all components. RERUN OBD Test.
4	CHECK PSP CIRCUIT FOR SHORT • Key off. • PSP switch disconnected. • Breakout box installed, leave PCM disconnected. • Measure resistance between Test Pin 31 and Test Pin 91 at breakout box. • Measure resistance between Test Pin 31 at breakout box chassis ground. • **Is either resistance less than 10,000 ohms?**	Yes	SERVICE short in harness. REMOVE breakout box. RECONNECT all components. VERIFY repair.
		No	Go to next step.
5	CHECK PSP SWITCH RESISTANCE • Key off. • PSP switch disconnected. • Start engine and let idle in Park/Neutral. • Measure resistance between PSP switch terminals while turning steering wheel. • **Is resistance less than 5.0 ohms?**	Yes	REPLACE PCM. REMOVE breakout box. RECONNECT all components. RERUN OBD Test.
		No	REPLACE PSP switch. REMOVE breakout box. RECONNECT all components. RERUN OBD Test.

DTC P1652	IAC valve monitor disable by PSP switch failed on
DESCRIPTION	• DTC P1652 indicates Power steering pressure (PSP) switch is always on at IAC system monitoring condition

[Possible Cause]
- Damaged PSP switch
- Damaged PCM
- PSP signal circuit short to ground

STEP	INSPECTION		ACTION
1	VERIFY ELECTRICAL FUNCTION • Key on, engine off. • View PSP PID with NGS tester while turning steering wheel. • **Does PSP PID indicate Low/High or High/Low?**	Yes	Intermittent poor connection or component malfunction. REPAIR or REPLACE as necessary.
		No	Go to next step.
2	CHECK PSP SWITCH OPERATION • Key off. • Start engine and let it idle. • View RPM PID with NGS tester. • Disconnect PSP switch vehicle harness connector. • **Does engine rpm decrease?**	Yes	Go to step
		No	Go to next step.
3	CHECK CONTINUITY OF PSP CIRCUIT • Key off. • PSP switch disconnected. • Disconnect PCM. Inspect for damage or pushed out pins, corrosion, loose wires, etc. Service as necessary. • Install breakout box. Leave PCM disconnected. • Measure resistance between Test Pin 31 at breakout box and PSP switch vehicle harness connector. • **Is resistance less than 5.0 ohms?**	Yes	Go to next step.
		No	SERVICE open circuit. REMOVE breakout box. RECONNECT all component. RESET PCM to completely clear DTCs. ☞ After Repair Procedure COMPLETE OBD II Drive Mode. RERUN OBD Test.
4	CHECK PSP SWITCH RESISTANCE • Key off. • PSP switch disconnected. • Measure resistance between PSP switch terminal and chassis ground while turning steering wheel. • **Is resistance less than 5.0 ohms?**	Yes	Go to next step.
		No	REPLACE PSP switch. REMOVE breakout box. RECONNECT all components. RESET PCM to completely clear DTCs. ☞ After Repair Procedure COMPLETE OBD II Drive Mode. RERUN OBD Test.
5	CHECK POWER STEERING FLUID PRESSURE • Key off. • Measure power steering fluid pressure. ☞ 06–12 POWER STEERING FLUID INSPECTION, Fluid Pressure Inspection • **Is power steering fluid pressure specified?**	Yes	REPLACE PCM. RERUN OBD Test.
		No	REPAIR or REPLACE engine speed sensing power steering system. RERUN OBD Test.

KOEO DTC P1703	Brake switch out of self-test range
DESCRIPTION	• DTC P1703 indicates voltage was seen at brake switch input during KOEO self-test.

[Possible Cause]
- Brake pedal applied during KOEO self-test
- Brake switch input Test Pin shorted to power circuit
- Damaged brake switch

STEP	INSPECTION		ACTION
1	VERIFY BRAKE PEDAL WAS NOT APPLIED • **Was brake pedal applied during KOEO self-test?**	Yes	RERUN KOEO Self-Test. Avoid applying brake pedal during test.
		No	Go to next step.
2	CHECK OPERATION OF BRAKE LIGHT • Apply and release brake pedal several times and observe brake light operation. • **Does brake light operate normally?**	Yes	Go to next step.
		No	Go to step 4 if brake light is never on. Go to step 6 if brake light is always on.
3	CHECK FOR PCM BOO PID CYCLING • Key on, engine off. • Access BOO PID. • Apply and release brake pedal several times while viewing BOO PID. **Note** • If BOO PID is not accessible, check BOO circuit. • **Does BOO PID cycle ON/OFF?**	Yes	Go to Pinpoint Test for intermittent KOEO input sensor wiggle procedure.
		No	Check BOO circuit.
4	CHECK FOR POWER TO BRAKE SWITCH **Note** • Using 12 volt test lamp, verify integrity of related fuses in fuse panel and check condition of brake light bulbs before starting this test. • Key off. • Disconnect brake switch. • Measure power circuit input voltage between brake switch and chassis ground. • **Is voltage greater than 10 volts?**	Yes	Go to next step.
		No	SERVICE open power circuit to brake switch. RECONNECT switch. RESET PCM to completely clear DTCs. ☞ After Repair Procedure COMPLETE OBD II Drive Mode. RERUN OBD Test.
5	VERIFY INTEGRITY OF BRAKE SWITCH • Brake switch disconnected. • Connect digital multimeter test probes to brake switch terminals at brake switch. • Apply brake pedal while monitoring reading. • **Is resistance less than 5.0 ohms?**	Yes	SERVICE open circuit between brake switch and brake light ground. RECONNECT brake switch. RESET PCM to completely clear DTCs. ☞ After Repair Procedure COMPLETE OBD II Drive Mode. RERUN OBD Test.
		No	REPLACE brake switch. RECONNECT brake switch. RESET PCM to completely clear DTCs. ☞ After Repair Procedure COMPLETE OBD II Drive Mode. RERUN OBD Test.
6	VERIFY BRAKE SWITCHES NOT ALWAYS CLOSED • Key off. • Brake switch disconnected. • Key on, Engine off. • **Is brake light still on?**	Yes	Go to next step.
		No	VERIFY proper installation of brake switch. If okay, REPLACE brake switch. RECONNECT brake switch. RESET PCM to completely clear DTCs. ☞ After Repair Procedure COMPLETE OBD II Drive Mode. RERUN OBD Test.
7	CHECK FOR SHORT TO POWER CIRCUIT IN PCM • Key off. • Brake switch disconnected. • Key on. • **Is brake light still on?**	Yes	Go to next step.
		No	REPLACE PCM. RECONNECT brake switch. RERUN OBD Test.

STEP	INSPECTION		ACTION
8	CHECK FOR SHORT TO POWER CIRCUIT IN SHIFT LOCK ACTUATOR • Key off. • PCM disconnected. • Disconnect shift lock actuator, cruise control module, ABS/TCS control module to isolate brake switch. • Key on, engine off. • **Is brake light still on?**	Yes	SERVICE short to power in stoplamp circuit. RECONNECT PCM, brake switch and other accessories. RERUN OBD test.
		No	SERVICE short in shift lock actuator, cruise control module or ABS/TCS control module. RECONNECT all components. RERUN OBD Test.

KOER DTC P1703	Brake switch out of self-test range
DESCRIPTION	• DTC P1703 indicates when brake pedal was applied and released during KOER self-test, BOO signal did not cycle high and low.

[Possible Cause]
- Brake pedal not applied and released during KOER self-test
- Brake pedal applied during entire KOER self-test
- Open to ground or power
- Damaged brake switch
- Damaged PCM

STEP	INSPECTION		ACTION
1	VERIFY BRAKE PEDAL WAS APPLIED • **Was brake pedal applied and released during KOER self-test?**	Yes	Go to next step.
		No	RERUN KOEO Self-Test. APPLY and RELEASE brake pedal.
2	CHECK OPERATION OF BRAKE LIGHT • Apply and release brake pedal several times and observe brake light operation. • **Does brake light operate normally?**	Yes	Go to next step.
		No	Go to step 4 if brake light is never on. Go to step 6 if brake light is always on.
3	CHECK FOR PCM BOO PID CYCLING • Key on, engine off. • Access BOO PID. • Apply and release brake pedal several times while viewing BOO PID. **Note** • If BOO PID is not accessible, check BOO circuit. • **Does BOO PID cycle ON/OFF?**	Yes	Go to Pinpoint Test for intermittent KOEO input sensor wiggle procedure.
		No	Check brake switch input circuit.
4	CHECK FOR POWER CIRCUIT TO BRAKE SWITCH **Note** • Using 12 volt test lamp, verify integrity of related fuses in fuse panel and check condition of brake light bulbs before starting this test. • Key off. • Disconnect brake switch. • Measure power circuit input voltage between brake switch and chassis ground. • **Is voltage greater than 10 volts?**	Yes	Go to next step.
		No	SERVICE open power circuit circuit to brake switch. RECONNECT brake switch. RESET PCM to completely clear DTCs. ☞ After Repair Procedure COMPLETE OBD II Drive Mode. RERUN OBD Test.
5	VERIFY INTEGRITY OF BRAKE SWITCH • Brake switch disconnected. • Connect digital multimeter test probes to brake switch terminals at brake switch. • Apply brake pedal while monitoring reading. • **Is resistance less than 5.0 ohms?**	Yes	SERVICE open circuit between brake switch and brake light ground. RECONNECT brake switch. RESET PCM to completely clear DTCs. ☞ After Repair Procedure COMPLETE OBD II Drive Mode. RERUN OBD Test.
		No	REPLACE brake switch. RECONNECT brake switch. RESET PCM to completely clear DTCs. ☞ After Repair Procedure COMPLETE OBD II Drive Mode. RERUN OBD Test.

STEP	INSPECTION		ACTION
6	VERIFY BRAKE SWITCHES NOT ALWAYS CLOSED • Key off. • Brake switch disconnected. • Key on, engine off. • **Is brake light still on?**	Yes	Go to next step.
		No	VERIFY proper installation of brake switch. If okay, REPLACE brake switch. RECONNECT brake switch. RESET PCM to completely clear DTCs. ☞ After Repair Procedure COMPLETE OBD II Drive Mode. RERUN OBD Test.
7	CHECK FOR SHORT TO POWER CIRCUIT IN PCM • Key off. • Brake switch disconnected. • Key on. • **Is brake light still on?**	Yes	Go to next step.
		No	REPLACE PCM. RECONNECT brake switch. RERUN OBD Test.
8	CHECK FOR SHORT TO POWER CIRCUIT IN SHIFT LOCK ACTUATOR • Key off. • PCM disconnected. • Disconnect shift lock actuator, cruise control module, ABS/TCS control module to isolate brake switch. • Key on, engine off. • **IS brake light still on?**	Yes	SERVICE short to power in brake light circuit. RECONNECT PCM, brake switch and other accessories. RERUN OBD test.
		No	SERVICE short in shift lock actuator, cruise control module or ABS/TCS control module all components. RECONNECT all components. RERUN OBD Test.

ENGINE SYMPTOM TROUBLESHOOTING [KL]

W6U101W06

Diagnostic Index

TROUBLESHOOTING ITEM			DESCRIPTION
No.	TROUBLE		
1	Melts main or other fuse		—
2	Will not crank		Starter does not work
3	Hard start/long crank/erratic start/erratic crank		Starter cranks engine at normal speed but engine requires excessive cranking
4	Engine stalls	After start	Engine stops unexpectedly at idle and/or after start
		At idle	
5	Cranks normally but will not start		Starter cranks engine at normal speed but engine will not run
6	Slow return to idle		Engine takes more time than normal to return to idle speed
7	Engine runs rough/rolling idle		Engine speed fluctuates between specified idle speed and lower speed and excessive engine shake Idle speed too slow and excessive engine shake
8	Fast idle/runs on		Engine speed continues at fast idle after warm-up Engine runs after ignition switch is turned off
9	Low idle/stalls during deceleration		Engine stops unexpectedly at beginning of deceleration or recovery from deceleration
10	Engine stalls/quits	Acceleration/cruise	Engine stops unexpectedly at beginning of acceleration or during acceleration Engine stops unexpectedly while cruising
	Engine runs rough	Acceleration/cruise	Engine speed fluctuates during acceleration or cruising
	Misses	Acceleration/cruise	Engine misses during acceleration or cruising
	Buck/jerk	Acceleration/cruise/ deceleration	Vehicle bucks/jerks during acceleration, cruising, or deceleration
	Hesitation/stumble	Acceleration	Momentary pause at beginning of acceleration, or during acceleration
	Surges	Acceleration/cruise	Momentary minor irregularity in engine output
11	Lack/loss of power	Acceleration/cruise	Performance poor under load (i.e., power down when climbing hills)
12	Knocking/pinging	Acceleration/cruise	Sound produced when air/fuel mixture is ignited by something other than spark plug (i.e., hot spot in combustion chamber)
13	Poor fuel economy		Fuel economy unsatisfactory
14	Emissions compliance		Fails emissions test
15	MIL never on		Malfunction indicator lamp never on
16	High oil consumption/leaks		Oil consumption excessive
17	Cooling system concerns	Overheating	Engine runs at higher than normal temperature/overheats
18	Cooling system concerns	Runs cold	Engine does not reach normal operating temperature
19	Exhaust smoke		Blue, black, or white smoke from exhaust system
20	Fuel odor (in engine compartment)		Gasoline fuel smell or visible leaks
21	Engine noise		Engine noise from under hood
22	Vibration concerns (engine)		Vibration from under hood or driveline
23	A/C does not work		A/C compressor magnetic clutch does not engage when A/C is turned on
24	A/C always on/A/C compressor runs continuously		A/C compressor magnetic clutch does not disengage
25	A/C does not cut off under wide open throttle conditions		A/C compressor magnetic clutch does not disengage under wide open throttle
26	Exhaust sulphur smell		Rotten egg smell (sulphur) from exhaust
27	Intermittent concerns		Symptom occurs randomly and is difficult to diagnose

TROUBLESHOOTING ITEM			DESCRIPTION
No.	TROUBLE		
28	Automatic transaxle concerns	Upshift/downshift/ engagement	Automatic transaxle concerns not related to engine performance
29	Fuel refill issues		Fuel tank does not refill smoothly
30	Fuel refilling shut off issues		Fuel refill does not shut off properly
31	Constant voltage		Incorrect constant voltage

Quick Diagnostic Chart

	Troubleshooting item		Possible factor: Malfunction of starter motor(Mechanical or electrical)	Starter interlock switch (Open)	Starter circuit including ignition switch open	Improper engine oil level	Low or dead battery	Malfunction of charging system	Cruise control system	Improper engine compression	Improper valve timing	Hydrolocked engine	Improper engine oil viscosity	Improper dipstick	Malfunction of base engine	Drive plate or Flywheel seized	Improper tension or damaged drive belts	Improper engine coolant level	Water and anti-freeze mixture improperly	Malfunction of cooling system(radiator, hoses, overflow system, thermostat, etc.)	Malfunction of cooling fan system	Engine or transaxle mounts improperly installed	Condencer fan and/or cooling fan seat improperly	Adjustment of accelerator cable free-play	Adjustment of cruise control cable free play	Fuel quality	Engine overheating	Air cleaner element clogged or restriction	Air leaks from intake air system (tubes loose, crack, gaskets broken)	Improper operation of IAC valve	Malfunction of throttle body	Vacuum leaks (damaged vacuum hose, mis-routing)	Mis-adjustment of initial ignition timing (CKP & crankshaft pulley mis-adjustment)	Malfunction of ignition coil (I.e. open, short or cracks)	Malfunction of external condenser	Malfunction of spark plug	Malfunction of high-tension leads (cracks, open, low resistance)	Damaged crankshaft position sensor (I.e. Open or short circuits)	Damaged crankshaft pulley	Improper gap between CKP sensor and crankshaft pulley	Malfunction of fuel pump(Mechanically or electrically)	Malfunction of pressure regulator	Restriction or clogged in fuel hoses
1	Melts main or other fuse																Not in applicable																											
2	Will not crank		x	x	x		x	x				x				x																												
3	Hard start/long crank/ erratic start/erratic crank																								x		x				x					x	x	x	x	x	x	x	x	x
4	Engine stalls	After start								x	x	x													x	x	x	x	x		x	x	x	x	x	x	x	x	x	x	x	x	x
		At idle								x	x	x													x	x	x	x	x		x	x	x	x	x	x	x	x	x	x	x	x	x
5	Cranks normally but will not start									x	x	x													x	x		x	x		x	x	x	x	x	x	x	x	x	x	x	x	x
6	Slow return to idle																			x										x														
7	Engine runs rough/ rolling idle									x	x														x	x		x	x		x	x				x	x	x	x	x	x	x	x	x
8	Fast idle/runs on																							x	x																				
9	Low idle/ stalls during deceleration																											x	x																
10	Engine stalls/quits	Acceleration/cruise							x	x	x														x	x	x	x		x	x				x		x	x	x	x	x	x	x
	Engine runs rough	Acceleration/cruise																																										
	Misses	Acceleration/cruise																																										
	Buck/jerk	Acceleration/cruise / deceleration																																									
	Hesitation/stumble	Acceleration																																									
	Surges	Acceleration/cruise																																									
11	Lack/loss of power	Acceleration/cruise								x	x														x	x	x	x			x				x		x	x	x	x	x	x	x
12	Knocking/pinging	Acceleration/cruise								x										x						x														x	x			
13	Poor fuel economy									x	x							x		x	x				x		x	x								x	x				x	x	x	x
14	Emission compliance									x	x				x					x							x	x			x					x	x				x	x	x	x
15	MIL never on																																											
16	High oil consumption/leaks												x	x	x																													
17	Cooling system concerns	Overheating														x	x	x	x	x	x																								
18	Cooling system concerns	Runs cold																		x	x																								
19	Exhaust smoke														x					x							x									x	x				x	x	x	x
20	Fuel odor (in engine compartment)																																											x	
21	Engine noise					x									x		x												x			x												
22	Vibration concerns(engine)																x						x	x																				
23	A/C does not work																																											
24	A/C always on/A/C compressor runs continuously																																											
25	A/C does not cut off under wide open throttle conditions																																											
26	Exhaust sulfur smell																									x																		
27	Intermittent concerns							x																					x		x			x				x	x	x			
28	Automatic transaxle concerns	Upshift/downshift/ engagement	05-01B AUTOMATIC TRANSAXLE SYMPTOM TROUBLE SHOOTING [GF4A-EL]																																									
29	Fuel refill issues																																											
30	Fuel refilling shut off issues																																											
31	Constant voltage																																											

W6U101WKR

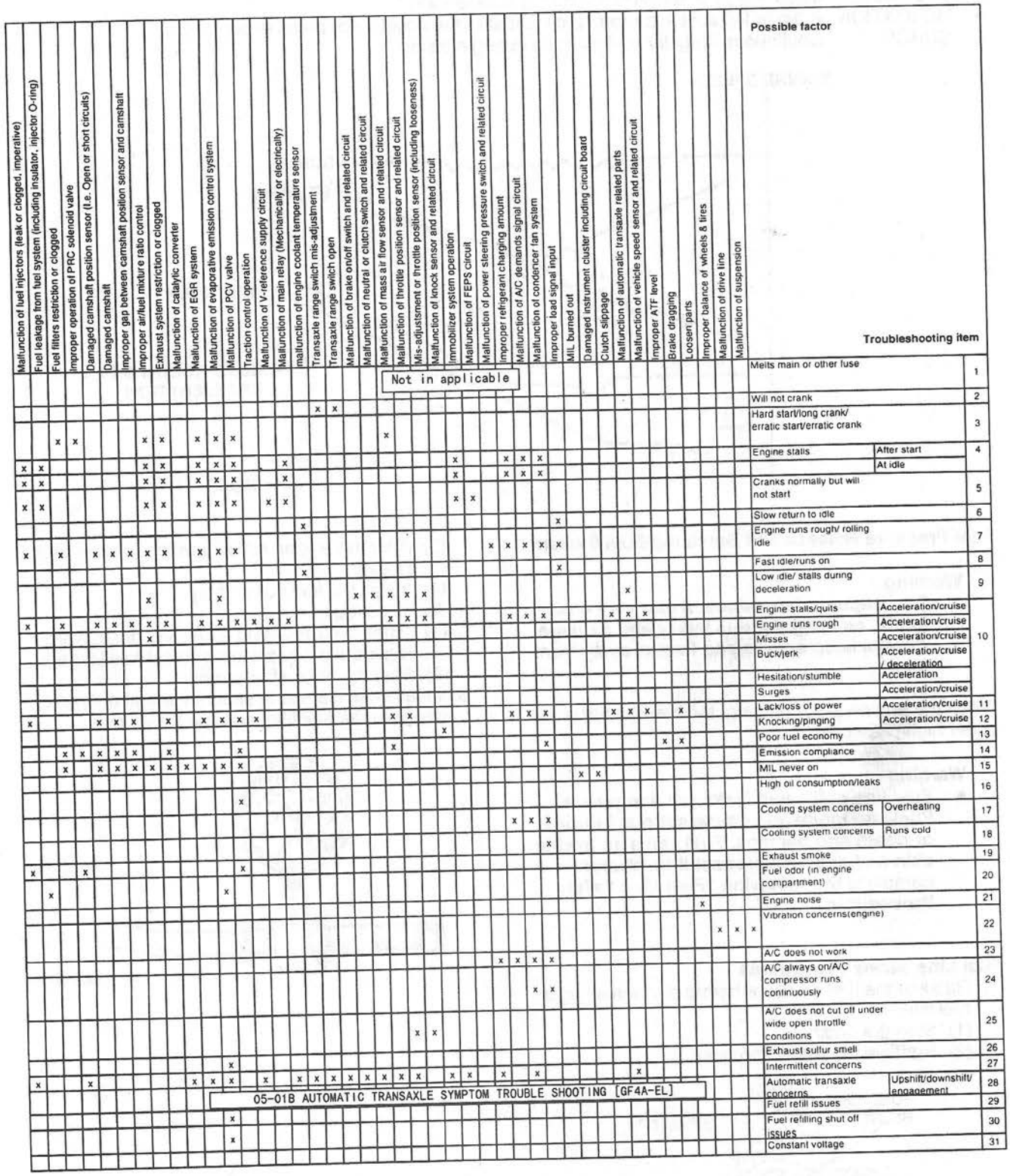
Possible factor
Troubleshooting item
Malfunction of fuel injectors (leak or clogged, imperative)
Fuel leakage from fuel system (including insulator, injector O-ring)
Fuel filters restriction or clogged
Improper operation of PRC solenoid valve
Damaged camshaft position sensor (i.e. Open or short circuits)
Damaged camshaft
Improper gap between camshaft position sensor and camshaft
Improper air/fuel mixture ratio control
Exhaust system restriction or clogged
Malfunction of catalytic converter
Malfunction of EGR system
Malfunction of evaporative emission control system
Malfunction of PCV valve
Traction control operation
Malfunction of V-reference supply circuit
Malfunction of main relay (Mechanically or electrically)
malfunction of engine coolant temperature sensor
Transaxle range switch mis-adjustment
Transaxle range switch open
Malfunction of brake on/off switch and related circuit
Malfunction of neutral or clutch switch and related circuit
Malfunction of mass air flow sensor and related circuit
Malfunction of throttle position sensor and related circuit
Mis-adjustment or throttle position sensor (including looseness)
Malfunction of knock sensor and related circuit
Immobilizer system operation
Malfunction of FEPS circuit
Malfunction of power steering pressure switch and related circuit
Improper refrigerant charging amount
Malfunction of A/C demands signal circuit
Malfunction of condencner fan system
Improper load signal input
MIL burned out
Damaged instrument cluster including circuit board
Clutch slippage
Malfunction of automatic transaxle related parts
Malfunction of vehicle speed sensor and related circuit
Improper ATF level
Brake dragging
Loosen parts
Improper balance of wheels & tires
Malfunction of drive line
Malfunction of suspension
Not in applicable
Melts main or other fuse 1
Will not crank 2
Hard start/long crank/ erratic start/erratic crank 3
Engine stalls — After start 4
Engine stalls — At idle 4
Cranks normally but will not start 5
Slow return to idle 6
Engine runs rough/ rolling idle 7
Fast idle/runs on 8
Low idle/ stalls during deceleration 9
Engine stalls/quits — Acceleration/cruise 10
Engine runs rough — Acceleration/cruise 10
Misses — Acceleration/cruise 10
Buck/jerk — Acceleration/cruise / deceleration 10
Hesitation/stumble — Acceleration 10
Surges — Acceleration/cruise 10
Lack/loss of power — Acceleration/cruise 11
Knocking/pinging — Acceleration/cruise 12
Poor fuel economy 13
Emission compliance 14
MIL never on 15
High oil consumption/leaks 16
Cooling system concerns — Overheating 17
Cooling system concerns — Runs cold 18
Exhaust smoke 19
Fuel odor (in engine compartment) 20
Engine noise 21
Vibration concerns(engine) 22
A/C does not work 23
A/C always on/A/C compressor runs continuously 24
A/C does not cut off under wide open throttle conditions 25
Exhaust sulfur smell 26
Intermittent concerns 27
Automatic transaxle concerns — Upshift/downshift/ engagement 28
Fuel refill issues 29
Fuel refilling shut off issues 30
Constant voltage 31
05-01B AUTOMATIC TRANSAXLE SYMPTOM TROUBLE SHOOTING [GF4A-EL]

W6U101WKS

Description of Drivability Problems

- STUMBLE: Mildly irregular performance during acceleration.
- HESITATION: A dip or flat spot in performance just after the accelerator pedal is depressed.
- SURGE: Continuous irregular performance during cruising.

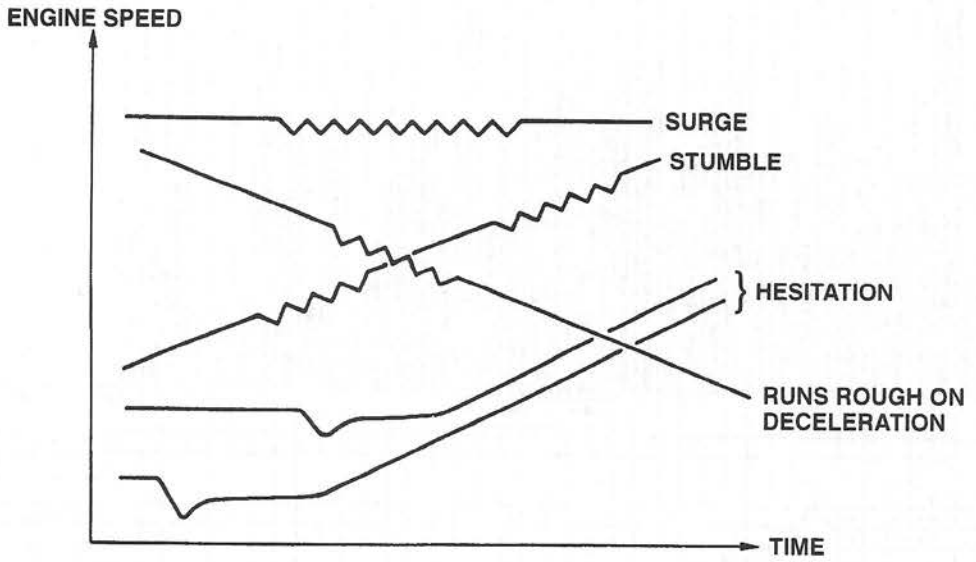

W6U101WHL

Fuel Pressure Release and Servicing Fuel System

Warning

- **Fuel vapor is hazardous. It can very easily ignite, causing serious injury and damage. Always keep sparks and flames away from fuel.**

When the engine is not running, the fuel system is under high pressure.

Warning

- **Fuel line spills and leaks are dangerous. Fuel can ignite and cause serious injuries or death and damage. Fuel can also irritate skin and eyes. To prevent this, always complete the following "Fuel Line Safety Procedures."**

Fuel Line Safety Procedures

1. Release the fuel pressure before disconnecting a fuel line.
   (1) Start the engine.
   (2) Remove the fuel pump relay.

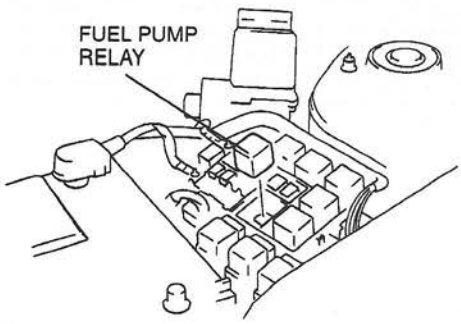

W6U101WHM

   (3) After the engine stalls, turn the ignition switch to OFF.
   (4) Install the fuel pump relay.
2. Avoid leakage.
   (1) When disconnecting a fuel line hose, wrap a rag around it to protect against fuel leakage.
   (2) Plug the hose after removal.
3. Install hose clamps to secure the fuel pressure gauge to the fuel filter and the main hose.

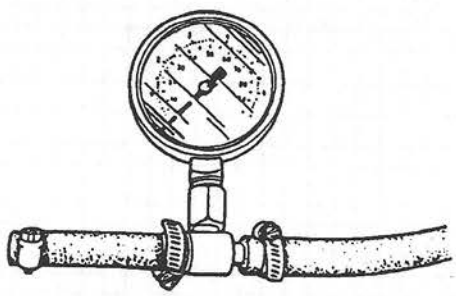

W6U101WHN

Symptom Troubleshooting

1	MELTS MAIN OR OTHER FUSE

[TROUBLESHOOTING HINTS]
Check the condition of the fuse

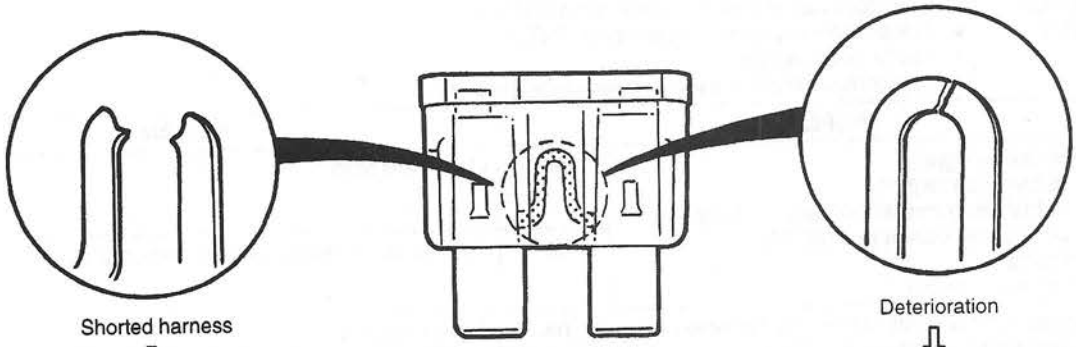

Damaged Fuse	Related Wiring Harness
MAIN (100 A)	Main fuse — Generator
BTN (40 A)	BTN fuse — ROOM fuse
ROOM (15 A)	ROOM fuse — PCM terminal
EGI INJ (30 A)	Main relay — Fuel injectors, Generator, EGR boost solenoid valve, PRC solenoid valve, EGR valve, Idle air control valve, Purge solenoid valve, Tank pressure control valve, Mass air flow sensor, Fuel pump relay, VRIS solenoid valve No.1, VRIS solenoid valve No.2, Heated oxygen sensor heater, Solenoid body
ENGINE (10 A)	ENGINE fuse — Main relay, Fuel pump relay
METER (15 A)	METER fuse — Transaxle range switch

W6U101WHP

2	WILL NOT CRANK
DESCRIPTION	Starter does not work
POSSIBLE CAUSE	• Open starter circuit between ignition switch and starter • Transaxle range switch malfunction (ATX) • Transaxle range switch misadjustment (ATX) • Starter interlock switch malfunction (MTX) • Starter malfunction • Seized/hydrolocked engine, flywheel or drive plate

STEP	INSPECTION		ACTION
1	Verify following(s): • Battery connection. • Automatic transaxle in Park or Neutral. • Clutch fully depressed (MTX). • Fuses. Are all items okay?	Yes	Go to next step.
		No	Service as necessary and repeat step 1.
2	Is clicking sound heard from starter when ignition switch is turned to START?	Yes	Go to next step.
		No	Go to step 3.
3	Check starting system. ☞ 01–19 STARTER INSPECTION Is starting system okay?	Yes	Check for seized/hydrolocked engine, flywheel or drive plate. ☞ 01–10B ENGINE COMPLETE [KL]
		No	Service as required.
4	Do any other electrical accessories work?	Yes	Go to next step.
		No	Check charging system. ☞ 01–17 GENERATOR INSPECTION
5	**Note** • Following test should be performed on automatic transaxles only. For manual transaxles, go to next step. Connect NGS tester to DLC. Access CPP/PNP PID. Turn ignition switch on. Is CPP/PNP PID indicated ON when selecting P or N range?	Yes	Go to next step.
		No	Check for adjustment of transaxle range switch. If transaxle range switch is adjusted properly, check for open circuit of transaxle range switch and related circuit.
6	Retrieve and record any continuous memory DTCs. Is any continuous memory DTC displayed?	Yes	DLC displayed. Go to appropriate DTC test.
		No	No DTC displayed. Go to next step.
7	Retrieve and record any KOEO DTCs. Is any DTC displayed during KOEO inspection?	Yes	DTC displayed. Go to appropriate DTC test.
		No	No DTC displayed. Check following: • START circuit in ignition switch. • Open circuit between ignition switch and starter. • Starter interlock switch (MTX).
8	Verify test results. If okay, return to diagnostic index to service any additional symptoms.		

3	HARD START/LONG CRANK/ERRATIC START/ERRATIC CRANK
DESCRIPTION	• Starter cranks engine at normal speed but engine requires excessive cranking time before start • Battery in normal condition
POSSIBLE CAUSE	• Spark leak from hightension leads • Poor fuel quality • Spark plug malfunction • Erratic signal from crankshaft position sensor • Positive crankcase ventilation (PCV) valve malfunction • Purge solenoid valve malfunction • Restriction in exhaust system • Vacuum leaks • Starting system malfunction • Air leak from intake air system • Air cleaner restriction • Inadequate fuel pressure • Mass air flow sensor contamination • EGR valve malfunction **Warning** **Following troubleshooting flow chart contains fuel system diagnosis and repair procedures. Read following warnings before performing fuel system service:** • **Fuel vapor is hazardous. It can easily ignite, causing serious injury and damage. Always keep sparks and flames away from fuel.** • **Fuel line spills and leaks are dangerous. Fuel can ignite and cause serious injuries or death and damage. Fuel can also irritate skin and eyes. To prevent this, always complete "BEFORE REPAIR PROCEDURE" and "AFTER REPAIR PROCEDURE" described in this manual.** **☞ 01–14 BEFORE REPAIR PROCEDURE** **☞ 01–14 AFTER REPAIR PROCEDURE**

STEP	INSPECTION		ACTION
1	Verify follows: • Vacuum leaks • Fuel quality (i.e. proper octane, contamination, winter/summer blend). • Loose bands on intake air system. • Cracks on intake air system parts. • Air cleaner restriction. Are all items okay?	Yes	Go to next step.
		No	Service as necessary.
2	Are any DTCs displayed during continuous memory, KOEO and KOER self-test?	Yes	DTC displayed. Go to appropriate DTC test.
		No	No DTC displayed. Go to next step.
3	Is engine overheating?	Yes	Go to flowchart 17 for "COOLING SYSTEM CONCERNS OVERHEATING".
		No	Go to next step.
4	Check for cracks on high tension leads Is there any crack on high tension leads?	Yes	Repair suspected high tension lead.
		No	Go to next step.
5	Check spark plug conditions. Is spark plug wet, converted with carbon or grayish white?	Yes	If spark plug is wet or converted with carbon, check for fuel leak from fuel injector. If spark plug is grayish white, check for clogged fuel injector.
		No	Install spark plugs on original cylinders. Go to next step.
6	Visually inspect crankshaft position (CKP) sensor and teeth of crankshaft pulley. Is CKP sensor and teeth of crankshaft pulley okay?	Yes	Go to next step.
		No	Replace malfunctioning part.
7	Measure gap between crankshaft position (CKP) sensor and teeth of crankshaft pulley. **Specification** **0.5—1.5 mm {0.02—0.05 in}** Is gap within specification?	Yes	Go to next step.
		No	Adjust CKP sensor.

STEP	INSPECTION		ACTION
8	Remove PCV valve and check PCV valve. Does PCV valve rattle?	Yes	Go to next step.
		No	Replace PCV valve.
9	Install fuel gauge between fuel filter and fuel distributor. Connect NGS tester to DLC. In OUTPUT TEST MODE select "ALL ON" and press start. Is fuel line pressure correct with ignition switch ON? **Fuel line pressure** **260—310 kPa** **{2.6—3.2 kgf/cm², 37—46 psi}**	Yes	Go to next step.
		No	**Zero or low:** Check fuel pump circuit. Check for open fuel pump relief valve. Check for fuel leak inside pressure regulator. Check for clogged main fuel line. **High:** Check pressure regulator for high pressure cause. Check for clogged fuel return line.
10	Is fuel line pressure held after ignition switch is turned off? **Fuel line pressure** **More than 150 kPa** **{1.5 kgf/cm², 21 psi}**	Yes	Go to next step.
		No	Check pressure regulator diaphragm condition. If condition is okay, check fuel injector. If condition is not okay, replace pressure regulator.
11	Disconnect vacuum hose from pressure regulator and plug hose. Start engine. Does fuel line pressure remain within ± 20 kPa {0.21 kgf/cm², 3 psi} while driving vehicle?	Yes	Go to next step.
		No	Check for clogged fuel filter.
12	Connect vacuum hose to pressure regulator. Install vacuum gauge to intake manifold. Start engine. Does fuel pressure gauge reading increase as vacuum gauge reading decreases and/or does fuel pressure gauge reading decreases as vacuum gauge reading increases?	Yes	Go to next step.
		No	Connect vacuum pump to pressure regulator. Start engine and check that fuel pressure reading changed as vacuum changes. If changes, check vacuum line. If no change, replace pressure regulator.
13	Disconnect vacuum hose from purge solenoid valve and plug opening end of vacuum hose. Attempt to start engine. Is starting condition improved?	Yes	Check if purge solenoid valve sticks to open.
		No	Go to next step.
14	Check for contaminated mass air flow sensor. Is there any contamination?	Yes	Replace mass airflow sensor.
		No	Go to next step.
15	Is there restriction in exhaust system?	Yes	Check exhaust system.
		No	Go to next step.
16	Check engine condition while tapping EGR valve housing. Does engine condition improve?	Yes	Go to next step.
		No	Replace EGR valve.
17	Check starting system. ☞ 01–19 STARTER INSPECTION Is starting system normal?	Yes	Check for loosen connectors or poor terminal contact. If okay, remove EGR valve and visually check for mechanically stuck of EGR valve.
		No	Check continuity of stepping motor coil. If okay, go to next step.
18	Verify test results. If okay, return to diagnostic index to service any additional symptoms.		

4	ENGINE STALLS –AFTER START, AT IDLE
DESCRIPTION	Engine stops unexpectedly
POSSIBLE CAUSE	• Operation of immobilizer system • Air leak from intake air system parts • Improper operation of IAC valve • No signal from crankshaft position sensor due to sensor, related wire or wrong installation • Spark leak from high-tension leads • PCV valve malfunction • Restriction in exhaust system • Open or short circuit in fuel pump and related harness • Inadequate fuel pressure • Fuel leak from fuel injector • A/C system improperly operation • Purge solenoid valve malfunction • EGR valve malfunction • Low engine compression • Vacuum leak • Poor fuel quality • Air cleaner restriction • Electrical connector disconnection • No battery power supply to PCM or poor ground • Fuel pump mechanical malfunction • Fuel injector clogged

STEP	INSPECTION		ACTION
1	**Note** • Following test should be performed on vehicles equipped with immobilizer system. Skip this test and go to step 12 for non-immobilizer system. Attempt to start engine at least four times. Then, retrieve and record any continuous memory DTC. Is following condition appeared? • Engine is not completely started and DTC P1624 is retrieved.	Yes	Go to step 3.
		No	Go to next step.
2	Is engine stalled after approx. 2 seconds since engine is started?	Yes	Go to next step.
		No	Immobilizer system is okay.
3	Is immobilizer unit connector securely connected to immobilizer unit?	Yes	Go to next step.
		No	Connect immobilizer unit connector securely. Return step 2.
4	Does immobilizer indicator light flash and indicate following immobilizer DTCs? DTC: 01, 02, 03, 11, 21	Yes	Go to "ON BOARD DIAGNOSTIC FUNCTION" of immobilizer system.
		No	Go to next step.
5	Does immobilizer indicator light illuminate?	Yes	Go to step 8.
		No	Go to next step.
6	Does indicator light flush and indicate following immobilizer system DTC after more than 135 seconds after ignition switch turned ON? DTC: 24, 30	Yes	Go to "ON BOARD DIAGNOSTIC FUNCTION" of immobilizer system.
		No	Go to next step.
7	Turn ignition switch off. Disconnect immobilizer unit connector. Connect jumper between immobilizer unit connector terminal M and ground. Turn ignition switch ON. Does immobilizer indicator light illuminate?	Yes	Reconnect immobilizer unit connector. Go to next step.
		No	Inspection open circuit between immobilizer unit connector terminal M and instrument cluster. If okay, inspect immobilizer indicator light bulb. Repair or replace if necessary. Reconnect immobilizer unit connector. Then return to step 4.
8	Connect NGS tester to DLC and retrieve DTC. Is following DTC displayed? DTC: P1602, P1603, P1604, P1621, P1622, P1624	Yes	Go to appropriate DTC test.
		No	Go to next step.

STEP	INSPECTION		ACTION
9	Is there continuity between PCM ground terminal 23, 24, 51, 76, 77, 103 and ground?	Yes	Go to next step.
		No	Repair or replace wiring harness.
10	Turn ignition switch ON. Access VPWR PID. Is VPWR PID okay? VPWR PID: Battery positive voltage	Yes	Go to next step.
		No	Repair or replace wiring harness.
11	Disconnect immobilizer unit connector. Turn ignition switch ON. Is there battery positive voltage at immobilizer unit connector terminal J?	Yes	Check for open circuit between PCM connector terminal 5 and immobilizer unit connector terminal A.
		No	Repair or replace wiring harness between immobilizer unit connector terminal J and fuse panel.
12	Verify following: • Vacuum connection. • Air cleaner element. • No air leaks from intake air system. • No restriction of intake air system. • Proper sealing of intake manifold and components attached to intake manifold (i.e., EGR valve, IAC valve.) • Ignition wiring. • Fuel quality; such as proper octane, contamination, winter/summer blend. • Electrical connections. Are all items okay?	Yes	Go to next step.
		No	Service as necessary and repeat step 12.
13	Does vehicle now stall at idle in park/neutral with all accessories off?	Yes	Vehicle stalls now. Go to step 15.
		No	Go to next step.
14	Retrieve and record any continuous memory, KOEO and KOER DTCs. If engine stalls, retrieve continuos memory and KOEO DTCs. Are there any DTCs displayed?	Yes	DTC displayed. Go to appropriate DTC test.
		No	If communication error message is displayed on NGS tester, check following: • Open circuit between main relay and PCM using breakout box. • Open main relay ground circuit. • Main relay stuck to open. • Open PCM ground circuit. • Poor connection of vehicle body ground. If NGS tester works and no DTCs are displayed, go to step 16.
15	Retrieve and record any continuous memory and key on engine off diagnostic trouble code. Is any diagnostic trouble code displayed?	Yes	Diagnostic trouble code displayed. Go to diagnostic trouble code.
		No	If communication error message is displayed on NGS tester, check following: • Open circuit between main relay and PCM using breakout box. • Open main relay ground circuit. • Main relay stuck to open. • Open PCM ground circuit. • Poor connection of vehicle body ground. If NGS tester works and no DTCs are displayed, go to next step.
16	Attempt to start engine at part throttle. Does engine run smooth at part throttle?	Yes	Check IAC valve and wiring harness.
		No	Go to next step.
17	Connect NGS tester to DLC. Access RPM PID. Is RPM PID indicating engine speed during cranking of engine?	Yes	Go to next step.
		No	Check following: • Open or short circuit in CKP sensor. • Open or short circuit between CKP sensor and PCM. • Open or short circuit between CKP sensor and harness. If CKP sensor and harness okay, go to next step.
18	Visually inspect crankshaft position (CKP) sensor and teeth of crankshaft pulley. Is CKP sensor and teeth of crankshaft pulley okay?	Yes	Go to next step.
		No	Replace malfunctioning part.

STEP	INSPECTION		ACTION
19	Measure gap between crankshaft position (CKP) sensor and teeth of crankshaft pulley. **Specification** **0.5—1.5 mm {0.02—0.05 in}** Is gap within specifications?	Yes	Go to next step.
		No	Adjust CKP sensor.
20	Check for cracks on high tension leads. Is there any crack on high tension leads?	Yes	Repair suspected high tension lead.
		No	Go to next step.
21	Is strong blue spark visible at each disconnected high-tension lead while cranking engine?	Yes	Go to next step. If symptom occurs with A/C on, go to step 27.
		No	Check following: • Open or short circuit in ignition coil. • High-tension lead(s). • Open or short circuit in wire harness for ignition system. • Malfunction of external condenser for eliminating ignition noise. • Open circuit between ignition switch and ignition coil. • Open circuit between ignition coil and PCM.
22	Check spark plug conditions. Is spark plug wet, converted with carbon or grayish white?	Yes	If spark plug is wet or converted with carbon, check for fuel leak from fuel injector. If spark plug is grayish white, check clogged for fuel injector.
		No	Install spark plugs on original cylinders. Go to next step.
23	Remove PCV valve and shake PCV valve. Does PCV valve rattle?	Yes	Go to next step.
		No	Replace PCV valve.
24	Is there restriction in exhaust system? Is there any restriction?	Yes	Check exhaust system.
		No	Go to next step.
25	Install fuel gauge between fuel filter and fuel distributor. Connect NGS tester to DLC. In OUTPUT TEST MODE, select "ALL ON" and press start. Is fuel line pressure correct with ignition switch ON? **Fuel line pressure** **260—310 kPa** **{2.6—3.2 kgf/cm^2, 37—46 psi}**	Yes	Go to next step.
		No	**Zero or low:** Check fuel pump circuit. Check for open fuel pump relief valve. Check for fuel leak inside pressure regulator. Check for clogged main fuel line. **High:** Check pressure regulator for high pressure cause. Check for clogged fuel return line.
26	Visually check for fuel leakage at fuel injector O-ring, pressure regulator, and fuel line. Service as necessary. Does fuel line pressure hold after ignition switch is turned off? **Fuel line pressure** **More than 150 kPa** **{1.5 kgf/cm^2, 21 psi} for 5 minutes**	Yes	Go to next step.
		No	Check pressure regulator diaphragm condition. If condition is okay, check fuel injector. If condition is not okay, replace pressure regulator.
27	**Note** • Following test is for stall concerns with A/C on. If other symptom exists, go to next step. Connect pressure gauges to A/C low and high pressure side lines. Turn A/C on and measure low side and high side pressure. Are pressure within specifications? ☞ 07–10 REFRIGERANT PRESSURE CHECK	Yes	Go to next step.
		No	Check follows: • Refrigerant charging amount. • A/C pressure switches. • Additional fan operation. • A/C relay.
28	Disconnect vacuum hose between purge solenoid valve and intake manifold from purge solenoid valve side. Plug opening end of vacuum hose. Start engine. Is engine stall now eliminated?	Yes	Check if purge solenoid valve sticks to open. Check evaporative emission control system.
		No	Go to next step.

STEP	INSPECTION		ACTION
29	Is air leakage felt or heard at intake air system components while racing engine to higher speed?	Yes	Repair or replace.
		No	Go to next step.
30	Check engine condition while tapping EGR valve housing. Does engine condition improve?	Yes	Replace EGR valve.
		No	Go to next step.
31	Is engine compression correct?	Yes	Check for valve timing.
		No	Check for cause.
32	Verify test results. If okay, return to diagnostic index to service any additional symptoms.		

5	CRANKS NORMALLY BUT WILL NOT START
DESCRIPTION	• Starter cranks engine at normal speed but engine will not run • Refer to "ENGINE STALLS" if this symptom appears after engine stall • Fuel in tank • Battery in normal condition
POSSIBLE CAUSE	• Operation of immobilizer system • Air leak from intake air system • Improper operation of IAC valve • No signal from crankshaft position sensor due to sensor, related wire or incorrect installation • Spark leak from hightension leads • PCV valve malfunction • Restriction in exhaust system • Open or short circuit in fuel pump and related harness • Fuel pump mechanical malfunction • Fuel injector clogged • No battery power supply to PCM • Open PCM ground or vehicle body ground • EGR valve malfunction • Low engine compression • Vacuum leak • Poor fuel quality • Air cleaner restriction • Disconnect electrical connector disconnection • Inadequate fuel pressure • Fuel leak from injector • Purge solenoid valve malfunction

STEP	INSPECTION		ACTION
1	**Note** • Following test should be performed test vehicles equipped with immobilizer system. Skip this test and go to step 12 for non-immobilizer system. Is following condition appeared? • Engine is not completely started and DTC P1624 is retreived.	Yes	Go to step 3.
		No	Go to next step.
2	Is engine stalled after approx. 2 seconds since engine is started?	Yes	Go to next step.
		No	Immobilizer system is okay.
3	Is immobilizer unit connector securely connected to immobilizer unit?	Yes	Go to next step.
		No	Connect immobilizer unit connector securely. Return step 2.
4	Does immobilizer indicator light flash and indicate following immobilizer DTCs? DTC: 01, 02, 03, 11, 21	Yes	Go to "ON BOARD DIAGNOSTIC FUNCTION" of immobilizer system.
		No	Go to next step.
5	Does immobilizer indicator light illuminate?	Yes	Go to step 8.
		No	Go to next step.
6	Does indicator light flush and indicate following immobilizer system DTC after more than 135 seconds after ignition switch turned ON? DTC: 24, 30	Yes	Go to "ON BOARD DIAGNOSTIC FUNCTION" of immobilizer system.
		No	Go to next step.

STEP	INSPECTION		ACTION
7	Turn ignition switch off. Disconnect immobilizer unit connector. Connect jumper between immobilizer unit connector terminal M and ground. Turn ignition switch ON. Does immobilizer indicator light illuminate?	Yes	Reconnect immobilizer unit connector. Go to next step.
		No	Inspection open circuit between immobilizer unit connector terminal M and instrument cluster. If okay, inspect immobilizer indicator light bulb. Repair or replace if necessary. Reconnect immobilizer unit connector. Then return to step 4.
8	Connect NGS tester to DLC and retrieve DTC. Is following DTC displayed? DTC: P1602, P1603, P1604, P1621, P1622, P1624	Yes	Go to appropriate DTC test.
		No	Go to next step.
9	Is there continuity between PCM ground terminal 23, 24, 51, 76, 77, 103 and ground?	Yes	Go to next step.
		No	Repair or replace wiring harness.
10	Turn ignition switch ON. Access VPWR PID. Is VPWR PID okay? VPWR PID: Battery positive voltage	Yes	Go to next step.
		No	Repair or replace wiring harness.
11	Disconnect immobilizer unit connector. Turn ignition switch ON. Is there battery positive voltage at immobilizer unit connector terminal J?	Yes	Check for open circuit between PCM connector terminal 5 and immobilizer unit connector terminal A.
		No	Repair or replace wiring harness between immobilizer unit connector terminal J and fuse panel.
12	Verify following: • External fuel shut off or accessory (ignition switch, alarm etc.). • Fuel quality: such as proper octane, contamination, winter/summer blend. • No air leaks from intake air system. • Proper sealing of intake manifold and components attached to intake manifold: (i.e., EGR valve, IAC valve.) • Ignition wiring. • Electrical connections. • Fuses. Are all items okay?	Yes	Go to next step.
		No	Service as necessary and repeat step 12.
13	Retrieve and record any continuous memory and KOEO DTCs. Are there any DTCs displayed?	Yes	Go to appropriate DTC test.
		No	If communication error message is displayed on NGS tester, check following: • Open circuit between main relay and PCM using breakout box. • Open main relay ground circuit. • Main relay stuck to open. • Open PCM ground circuit. • Poor connection of vehicle body ground. If NGS tester works and no DTCs are displayed, go to next step.
14	Does engine start now with throttle closed?	Yes	Go to step 33.
		No	Go to next step.
15	Will engine start and run smoothly at part throttle?	Yes	Check IAC valve and wiring harness.
		No	Go to next step.
16	Connect NGS tester to DLC. Access RPM PID. Is RPM PID indicating engine speed when cranking engine?	Yes	Go to next step.
		No	Check following: • Open or short circuit in CKP sensor. • Open or short circuit between CKP sensor and PCM. • Open or short circuit between CKP sensor harnesses. If CKP sensor and harness okay, go to next step.
17	Visually inspect crankshaft position (CKP) sensor and teeth of crankshaft pulley. Is CKP sensor and teeth of crankshaft pulley okay?	Yes	Go to next step.
		No	Replace malfunctioning part.

STEP	INSPECTION		ACTION
18	Measure gap between crankshaft position (CKP) sensor and teeth of crankshaft pulley. **Specification** **0.5—1.5 mm {0.02—0.05 in}** Is gap within specification?	Yes	Go to next step.
		No	Adjust CKP sensor.
19	Check for cracks on high tension leads. Is there any crack on high tension leads?	Yes	Repair suspected high tension lead.
		No	Go to next step.
20	Is strong blue spark visible at each disconnected hightension lead while cranking engine?	Yes	Go to next step.
		No	Check following(s): • Open or short circuit in ignition coil. • Hightension lead(s). • Open or short circuit in wire harness for ignition system. • Malfunction of external condenser for eliminating ignition noise. • Open circuit between ignition switch and ignition coil. • Open circuit between ignition coil and PCM.
21	Check spark plug conditions. Is spark plug wet, converted with carbon or grayish white?	Yes	If spark plug is wet or converted with carbon, check for fuel leak from injector. If spark plug is grayish white, check for clogged fuel injector.
		No	Install spark plugs on original cylinders. Go to next step.
22	Disconnect TP sensor connector. Is there correct voltage at TP sensor connector terminal A with ignition switch ON? **Specification** **4.5—5.5 V**	Yes	Go to next step.
		No	Check short to ground in constant voltage circuit between TP sensor, EGR boost sensor or fuel tank pressure (FTP) sensor and powertrain control module.
23	Disconnect NGS tester. Turn ignition switch on. Check terminal voltage of FEPS at DLC. Is reading voltage greater than 9 V?	Yes	Check short to power in FEPS line between DLC and PCM.
		No	Go to next step.
24	Remove and shake PCV valve. Does PCV valve rattle?	Yes	Go to next step.
		No	Replace PCV valve.
25	Is there any restriction in exhaust system?	Yes	Check exhaust system.
		No	Go to next step.
26	Install fuel gauge between fuel filter and fuel distributor. Connect NGS tester to DLC. Select "ALL ON" in OUTPUT TEST MODE and press start. Is fuel line pressure correct when ignition switch is cycled ON/OFF five times? **Fuel line pressure** **260—310 kPa** **{2.6—3.2 kgf/cm^2, 37—46 psi}**	Yes	Go to next step.
		No	**Zero or low:** Check fuel pump circuit. Check for open fuel pump relief valve. Check for fuel leak inside pressure regulator. Check for clogged main fuel line. **High:** Check pressure regulator for high pressure cause. Check for clogged fuel return line.
27	Visually check for fuel leakage at fuel injector O-ring, pressure regulator, and fuel line. Service as necessary. Is fuel line pressure held after ignition switch is turned off? **Fuel line pressure** **More than 150 kPa** **{1.5 kgf/cm^2, 21 psi} for 5 minutes**	Yes	Go to next step.
		No	Check pressure regulator diaphragm condition. If condition is okay, check fuel injector. If condition is not okay, replace pressure regulator.

STEP	INSPECTION		ACTION
28	Crank engine for five second. Does pressure drop more than 34 kPa {0.35 kgf/cm^2, 5 psi} by end of five second crank cycle?	Yes	Go to next step.
		No	Check resistance of fuel injector(s). If resistance is okay, check following: • Fuel injector drive signal. • Injection flow rate. • PCM. If resistance is not okay, check following: • Open circuit in fuel injector circuit.
29	Disconnect vacuum hose between purge control solenoid and intake manifold from purge control solenoid side. Plug opening end of vacuum hose. Attempt to start engine. Is starting condition improved?	Yes	Check if purge solenoid valve sticks to open mechanically. Check evaporative emission control system.
		No	Go to next step.
30	Is air leakage felt or heard at intake air system components while racing engine to higher speed?	Yes	Repair or replace.
		No	Go to next step.
31	Check engine condition while tapping EGR valve housing. Does engine condition improve?	Yes	Replace EGR control valve.
		No	Go to next step.
32	Is engine compression correct?	Yes	Check valve timing.
		No	Check for causes.
33	Verify test results. If okay, return to diagnostic index to service any additional symptoms.		

6	SLOW RETURN TO IDLE
DESCRIPTION	Engine takes more time than normal to return to idle speed
POSSIBLE CAUSE	• Malfunction of ECT sensor • Thermostat stuck to open • Throttle body malfunction • Air leak from intake air system

STEP	INSPECTION		ACTION
1	Retrieve and record any continuous memory, KOEO and KOER DTCs. Are there any DTCs displayed?	Yes	Go to appropriate DTC test.
		No	No DTC displayed. Go to next step.
2	Make sure A/C switch is in OFF position. Place vehicle in park or neutral. Connect NGS tester to DLC. Access ECT V PID. Start engine and record ECT voltage reading every 60 seconds. **Note** • When ECT voltage reverses direction trend or changes slightly (0.03 volt or less), thermostat has opened. Is thermostat opening voltage within range?	Yes	Engine coolant temperature and thermostat are okay. Go to next step.
		No	Remove thermostat from engine and verify thermostat operation. If temperature gauge on instrument cluster is normal but ECT V is not same as temperature gauge reading, check ECT sensor.
3	Is throttle body free of contaminated?	Yes	Check for air leaks from intake air system components while racing engine to higher speed.
		No	Clean or replace throttle body.
4	Verify test results. If okay, return to diagnostic index to service any additional symptoms.		

7	ENGINE RUNS ROUGH/ROLLING IDLE
DESCRIPTION	• Engine speed fluctuates between specified idle speed and lower speed and excessive engine shake • Idle speed too slow and excessive engine shake
POSSIBLE CAUSE	• Air leak from intake air system parts • Spark leak from high-tension leads • Improper operation of IAC valve • Erratic or no signal from camshaft position (CMP) sensor • Erratic signal from crankshaft position (CKP) sensor • PCV valve malfunction • Restriction in exhaust system • Inadequate fuel pressure • Fuel leak from fuel injector • Engine overheating • A/C system improperly operation • Purge solenoid valve malfunction • EGR valve malfunction • Low engine compression • Poor fuel quality • Air cleaner restriction • Electrical connector disconnection • Fuel pump mechanical malfunction • Fuel injector clogged • Vacuum leak **Warning** **Following troubleshooting flow chart contains fuel system diagnosis and repair procedures. Read following warnings before performing fuel system service:** • **Fuel vapor is hazardous. It can easily ignite, causing serious injury and damage. Always keep sparks and flames away from fuel.** • **Fuel line spills and leaks are dangerous. Fuel can ignite and cause serious injuries or death and damage. Fuel can also irritate skin and eyes. To prevent this, always complete "BEFORE REPAIR PROCEDURE" and "AFTER REPAIR PROCEDURE" described in this manual.** **☞ 01–14 BEFORE REPAIR PROCEDURE** **☞ 01–14 AFTER REPAIR PROCEDURE**

STEP	INSPECTION		ACTION
1	Verify following: • External fuel shut off or accessory (ignition switch, alarm etc). • Fuel quality; such as proper octane, contamination, winter/summer blend. • No air leaks from intake air system. • Proper sealing of intake manifold and components attached to intake manifold; such as EGR valve, IAC solenoid. • Ignition wiring. • Electrical connections. • Fuses. Are all items okay?	Yes	Go to next step.
		No	Service as necessary and repeat step 1.
2	Retrieve and record any continuous memory, KOEO and KOER DTCs. Are there any DTC displayed?	Yes	Go to appropriate DTC test.
		No	No DTCs displayed. Go to next step.
3	Is engine overheating?	Yes	Go to flowchart 17 for "COOLING SYSTEM CONCERNS OVERHEATING".
		No	Go to next step.

STEP	INSPECTION		ACTION
4	**Note** • Following test is for engine running rough idle with A/C ON concerns. If other symptoms exist, go to next step. Connect pressure gauge to A/C low and high pressure side lines. Start engine and run it at idle. Turn A/C ON. Measure low side and high side pressures. Are reading pressures within specification? ☞ 07–10 REFRIGERANT PRESSURE CHECK	Yes	Go to next step.
		No	Check following: • Refrigerant charging amount. • A/C pressure switches. • Additional fan operation. • A/C relay.
5	**Note** • Following test is for engine running rough with P/S ON. If other symptoms exist, go to next step. Disconnect power steering pressure switch connector. Measure voltage at power steering pressure switch connector. Is voltage greater than 10 V?	Yes	Check power steering pressure switch operation.
		No	Go to next step.
6	Visually inspect crankshaft position (CKP) sensor and teeth of crankshaft pulley. Is CKP sensor and teeth of crankshaft pulley okay?	Yes	Go to next step.
		No	Replace malfunctioning part.
7	Measure gap between crankshaft position (CKP) sensor and teeth of crankshaft pulley. **Specification** **0.5—1.5 mm {0.02—0.05 in}** Is gap within specifications?	Yes	Go to next step.
		No	Adjust CKP sensor.
8	Check for cracks on high tension leads. Is there any crack on high tension leads?	Yes	Repair suspected high tension lead.
		No	Go to next step.
9	Check spark plug conditions. Is spark plug wet, converted with carbon or grayish white?	Yes	If spark plug is wet or converted with carbon, check for fuel leak from injector. If spark plug is grayish white, check for clogged fuel injector.
		No	Install spark plugs on original cylinders. Go to next step.
10	Start engine and disconnect IAC valve connector. Does rpm drop or engine stall?	Yes	Go to next step.
		No	Check IAC valve and wiring harness.
11	Install fuel pressure gauge between fuel filter and fuel distributor. Start engine and run it at idle. Measure fuel line pressure at idle. Is fuel line pressure correct at idle? **Fuel line pressure** **210—260 kPa** **{2.1—2.6 kgf/cm^2, 30—37 psi}**	Yes	Go to next step.
		No	**Zero or low:** Check fuel pump circuit. Check for open fuel pump relief valve. Check for fuel leak inside pressure regulator. Check for clogged main fuel line. **High:** Check pressure regulator for high pressure cause. Check for clogged fuel return line.
12	Visually check for fuel leakage at fuel injector O-ring, pressure regulator, and fuel line. Service as necessary. Does fuel line pressure hold after ignition switch is turned off? **Fuel line pressure** **More than 150 kPa** **{1.5 kgf/cm^2, 21 psi} for 5 minutes**	Yes	Go to next step.
		No	Check pressure regulator diaphragm condition. If condition is okay, check fuel injector. If condition is not okay, replace pressure regulator.

STEP	INSPECTION		ACTION
13	Connect NGS tester to DLC. Start engine and run it at idle. Access LONGFT1 and LONGFT2 PIDs. Measure LONGFT1 and LONGFT2 PID at idle. Is PID value between 22— –23%?	Yes	Go to next step.
		No	LONGFT1 and LONGFT2 PID is out of specification. **Less than specification (too rich):** Check evaporative emission control system. If system is okay, go to step 15. **Greater than specification (too lean):** Check for air leakage at intake air system components. If system is okay, go to next step.
14	Disconnect vacuum hose between purge solenoid valve and intake manifold from solenoid valve side. Plug open end of vacuum hose. Start engine. Does engine condition improve?	Yes	Check if purge solenoid valve sticks open mechanically. Check evaporative emission control system.
		No	Go to next step.
15	Remove PCV valve and shake PCV valve. Does PCV valve rattle?	Yes	Go to next step.
		No	Replace PCV valve.
16	Is there restriction in exhaust system?	Yes	Check exhaust system.
		No	Go to next step.
17	Visually inspect camshaft position (CMP) sensor and tooth of camshaft. Is CMP sensor and tooth of camshaft okay?	Yes	Go to next step.
		No	Replace malfunctioning part.
18	Check engine condition while tapping EGR valve housing. Does engine condition improve?	Yes	Replace EGR valve.
		No	Go to next step.
19	Is engine compression correct?	Yes	Check valve timing.
		No	Check for causes.
20	Verify test results. If okay, return to diagnostic index to service any additional symptoms.		

8	FAST IDLE/RUNS ON
DESCRIPTION	• Engine speed continues at fast idle after warm-up • Engine runs after ignition switch is turned off
POSSIBLE CAUSE	• Engine coolant temperature malfunction • Air leak from intake air system • Throttle body malfunction • Misadjustment of accelerator cable free play • Misadjustment of cruise control cable

STEP	INSPECTION		ACTION
1	Connect NGS tester to DLC. Access ECT PID. Start and warm-up engine to normal operating temperature. Is ECT PID reading between 112 °C {233.6 °F} and 82 °C {179.6 °F}?	Yes	Go to next step.
		No	If ECT PID is higher than 112 °C {233.6 °F}: Go to flow chart 17 for engine overheating. If ECT PID is less than 82 °C {179.6 °F}: Go to flow chart 18 for runs cold condition.
2	Retrieve and record any continuous memory. Are there any DTCs displayed?	Yes	Go to appropriate DTC test.
		No	No DTC displayed. Go to next step.
3	Is there air leakage felt or heard at intake air system components while racing engine to higher speed?	Yes	Repair or replace parts as necessary.
		No	Verify accelerator and/or cruise control cable free play.
4	Verify test results. If okay, return to diagnostic index to service any additional symptoms.		

9	LOW IDLE/STALLS DURING DECELERATION
DESCRIPTION	Engine stops unexpectedly at beginning of deceleration or recovery from deceleration
POSSIBLE CAUSE	• Vacuum leaks • IAC valve malfunction • Air leak from intake air system • Throttle position sensor or related circuit malfunction • Mass air flow sensor or related circuit malfunction • Brake switch or related circuit malfunction • Clutch position and/or neutral switch or related circuit malfunction

STEP	INSPECTION		ACTION
1	Does engine idle rough?	Yes	Go to flow chart 7 for "ENGINE RUNS ROUGH/ROLLING IDLE".
		No	Go to next step.
2	Check following: • Proper routing and no damage of vacuum lines. • IAC valve properly connected. • No air leak from intake air system. Are all items okay?	Yes	Go to next step.
		No	Service as necessary. Repeat step 2.
3	Retrieve and record any continuous memory, KOEO and KOER DTCs. Are there any DTCs displayed?	Yes	Go to appropriate DTC test.
		No	No DTCs displayed. Go to next step.
4	Does idle speed drop or stall when disconnecting IAC valve?	Yes	Go to next step.
		No	Check following: • Circuit from idle air control valve to PCM for open and short. • Idle air control valve for sticking. If okay, go to next step.
5	Disconnect vacuum hose between purge solenoid valve and intake manifold from solenoid valve side. Plug opening end of vacuum hose. Drive vehicle. Does engine condition improve?	Yes	Check evaporative emission control system.
		No	Go to next step.
6	Connect NGS tester to DLC. Access TP V PID, MAF PID, TCC PID, BOO PID and CPP/PNP PID. Monitor each PIDs while driving vehicle. • TP V PID ☞ 01–40B THROTTLE POSITION SENSOR INSPECTION [KL] • MAF PID ☞ 01–40B MASS AIR FLOW SENSOR INSPECTION [KL] • BOO PID ☞ 04–11 BRAKE SWITCH INSPECTION • CPP/PNP PID ☞ 01–40B NEUTRAL SWITCH INSPECTION [KL] ☞ 01–40B CLUTCH SWITCH INSPECTION [KL] • TCC PID ☞ 05–17B ELECTRICAL SYSTEM COMPONENT [GF4A-EL], Torque Converter Clutch Inspection Are PIDs okay?	Yes	Go to flow chart 27 for "Intermittent concerns".
		No	TP V PID: Check for TP sensor. MAF PID: Check for mass air flow sensor. TCC PID: Check TCC solenoid valve. BOO PID: Check brake on/off switch. CPP/PNP PID: Check clutch and neutral switches.
7	Verify test results. If okay, return to diagnostic index to service any additional symptoms.		

10	**ENGINE STALLS/QUITS (ACCELERATION/CRUISE)** **ENGINE RUNS ROUGH (ACCELERATION/CRUISE)** **MISSES (ACCELERATION/CRUISE)** **BUCK/JERK (ACCELERATION/CRUISE/DECELERATION)** **HESITATION/STUMBLE (ACCELERATION)** **SURGES (ACCELERATION/CRUISE)**
DESCRIPTION	• Engine stops unexpectedly at beginning of or during acceleration • Engine stops unexpectedly while cruising • Engine speed fluctuates during or cruising • Engine misses during acceleration or cruising • Vehicle bucks/jerks during acceleration, cruising or deceleration • Momentary pause at beginning of acceleration or during acceleration • Momentary minor irregularity in engine output
POSSIBLE CAUSE	• A/C system improperly operation • Air leak from intake air system parts • Improper operation of IAC valve • Erratic signal from crankshaft position sensor • Vacuum leaks • Spark leak from high-tension leads • PCV valve malfunction • Restriction in exhaust system • Inadequate fuel pressure • Fuel leak from injector • Intermittent open or short of mass-airflow sensor, throttle position sensor and vehicle speed sensor • Automatic transaxle malfunction • Improper VRIS operations • Erratic signal or no signal from camshaft position sensor • Purge solenoid valve malfunction • EGR valve malfunction • Low engine compression • Poor fuel quality • Air cleaner restriction • Improper valve timing due to jumping out timing belt • Intermittently open/short in fuel pump circuit • Fuel pump mechanical malfunction • Fuel injector clogged • Clutch slippage **Warning** **Following troubleshooting flow chart contains fuel system diagnosis and repair procedures. Read following warnings before performing fuel system service:** • **Fuel vapor is hazardous. It can easily ignite, causing serious injury and damage. Always keep sparks and flames away from fuel.** • **Fuel line spills and leaks are dangerous. Fuel can ignite and cause serious injuries or death and damage. Fuel can also irritate skin and eyes. To prevent this, always complete "BEFORE REPAIR PROCEDURE" and "AFTER REPAIR PROCEDURE" described in this manual.** **☞ 01–14 BEFORE REPAIR PROCEDURE** **☞ 01–14 AFTER REPAIR PROCEDURE**

STEP	INSPECTION		ACTION
1	Verify following: • Vacuum connection. • Air cleaner element. • No air leaks from intake air system. • No restriction of intake air system. • Proper sealing of intake manifold and components attached to intake manifold: EGR valve, IAC valve. • Ignition wiring. • Fuel quality: • Proper octane, contamination, winter/summer blend. • Electrical connections. Are all items okay?	Yes	Go to next step.
		No	Service as necessary and repeat step 1.
2	Retrieve and record any continuous memory, KOEO and KOER DTCs. If stall, condition exists retrieve continuos memory and KOEO DTCs. Are there any DTCs displayed?	Yes	Go to appropriate DTC test.
		No	No DTCs displayed. Go to next step.

STEP	INSPECTION		ACTION
3	Verify diagnostic trouble code of traction control system. Is DTC displayed?	Yes	Go to traction control system diagnosis. ☞ 04–01 ANTILOCK BRAKE SYSTEM AND TRACTION CONTROL SYSTEM ON-BOARD DIAGNOSIS
		No	Go to next step.
4	Is engine overheating?	Yes	Go to flowchart 17 for "COOLING SYSTEM CONCERNS OVERHEATING".
		No	Go to next step.
5	Connect NGS tester to DLC. Access RPM PID, VPWR PID, MAF PID, TP V PID, and VSS PID. Drive vehicle with monitoring PIDs. • VPWR PID: Battery positive voltage • PRM PID: Idle speed at idle • MAF PID ☞ 01–40B MAF AIR FLOW SENSOR INSPECTION [KL] • TP V PID ☞ 01–40B THROTTLE POSITION SENSOR INSPECTION [KL] • VSS PID ☞ 05–17B VEHICLE SPEED SENSOR INSPECTION [KL] Are PIDs within specification?	Yes	Go to next step.
		No	RPM PID: Check crankshaft position (CKP) sensor and related harness; such as vibration, intermittent open/short circuit. VPWR PID: Check for open circuit intermittently. MAF PID: Check for open circuit of mass air flow sensor and related wire harness intermittently. TP V PID: Check if output signal from throttle sensor changes smoothly. VSS PID: Check for open circuit of vehicle speed sensor and related wire harness intermittently.
6	Visually inspect crankshaft position (CKP) sensor and teeth of crankshaft pulley. Is CKP sensor and teeth of crankshaft pulley okay?	Yes	Go to next step.
		No	Replace malfunctioning part.
7	Measure gap between crankshaft position (CKP) sensor and teeth of crankshaft pulley. **Specification** **0.5—1.5 mm {0.02—0.05 in}** Is gap within specifications?	Yes	Go to next step.
		No	Adjust CKP sensor.
8	Check spark plug conditions. Is spark plug wet, converted with carbon or grayish white?	Yes	If spark plug is wet or converted with carbon, check for fuel leak from fuel injector. If spark plug is grayish white, check for clogged fuel injector.
		No	Install spark plugs on original cylinders. Go to next step.
9	Remove PCV valve and shake PCV valve. Does PCV valve rattle?	Yes	Go to next step.
		No	Replace PCV valve.
10	Check that throttle lever is resting on throttle valve stop screw and/or throttle valve orifice plug. Is lever in correct position?	Yes	Go to next step.
		No	Adjust as necessary.
11	Are there restrictions in exhaust system?	Yes	Check exhaust system.
		No	Go to next step.
12	Install fuel gauge between fuel filter and fuel distributor. Connect NGS tester to DLC. Select "ALL ON" in OUTPUT TEST MODE and press start. Is fuel line pressure correct with ignition switch ON? **Fuel line pressure** **260—310 kPa** **{2.6—3.2 kgf/cm², 37—46 psi}**	Yes	Go to next step.
		No	**Zero or low:** Check fuel pump circuit. Check for open fuel pump relief valve. Check for fuel leak inside pressure regulator. Check for clogged main fuel line. **High:** Check pressure regulator for high pressure cause. Check for clogged fuel return line.

STEP	INSPECTION		ACTION
13	Visually check for fuel leakage at fuel injector O-ring, pressure regulator, and fuel line. Service as necessary. Does fuel line pressure hold after ignition switch is turned off? **Fuel line pressure** **More than 150 kPa {1.5 kgf/cm^2, 21 psi} for 5 minutes**	Yes	Go to next step.
		No	Check pressure regulator diaphragm condition. If condition is okay, check fuel injector. If condition is not okay, replace pressure regulator.
14	**Note** • Following test is for engine stalling with A/C on concern. If other symptom exists, go to next step. Connect pressure gauge to A/C low and high pressure side lines. Turn A/C on and measure low side and high side pressure. Are pressure within specifications? ☞ 07–10 REFRIGERANT PRESSURE CHECK	Yes	Go to next step.
		No	Check follows: • Refrigerant charging amount. • A/C pressure switches. • Condenser fan operation. • A/C relay.
15	**Note** • Following test is performed for symptom with cruise control ON. If other symptoms exist, go to next step. Check cruise control system. Is cruise control system okay?	Yes	Go to next step.
		No	Repair or replace.
16	Disconnect vacuum hose between purge solenoid valve and intake manifold from purge solenoid valve side. Plug opening end of vacuum hose. Drive vehicle. Does engine condition improve?	Yes	Check if purge solenoid valve sticks to open mechanically. Check evaporative emission control system.
		No	Go to next step.
17	Verify VRIS operation. Is VRIS operation okay?	Yes	Go to next step.
		No	Check follows: • Wrong connection of VRIS connectors. • Wrong routing of vacuum hoses. • Vacuum leaks from vacuum hoses. • VRIS actuator No.1 or No.2 stuck to open or close.
18	Visually inspect camshaft position (CMP) sensor and tooth of camshaft. Is CMP sensor and tooth of camshaft okay?	Yes	Go to next step.
		No	Replace malfunctioning part.
19	Is engine compression correct? ☞ 01–10B COMPRESSION INSPECTION [KL]	Yes	Check following: • Valve timing. • Intermal transaxle (ATX only). • Clutch (MTX only).
		No	Check for cause.
20	Verify test results. If okay, return to diagnostic index to service any additional symptoms.		

11	LACK/LOSS OF POWER – ACCELERATION/CRUISE
DESCRIPTION	Performance poor under load (i.e., power down when climbing hills)
POSSIBLE CAUSE	• Improper A/C system operation • Air leak from intake air system parts • EGR valve malfunction • Erratic signal from crankshaft position sensor • Vacuum leaks • Spark leak from hightension leads • PCV valve malfunction • Restriction in exhaust system • Inadequate fuel pressure • Fuel leak from injector • Intermittent open or short of mass air flow sensor, throttle position sensor and vehicle speed sensor • Automatic transaxle malfunction • Improper VRIS operations • Erratic signal or no signal from camshaft position sensor • Purge solenoid valve malfunction • Brake dragging • Low engine compression • Poor fuel quality • Air cleaner restriction • Improper valve timing due to timing belt jump • Intermittent open/short in fuel pump circuit • Fuel pump mechanical malfunction • Fuel injector clogged • Clutch slippage **Warning** **Following troubleshooting flow chart contains fuel system diagnosis and repair procedures. Read following warnings before performing fuel system service:** • **Fuel vapor is hazardous. It can easily ignite, causing serious injury and damage. Always keep sparks and flames away from fuel.** • **Fuel line spills and leaks are dangerous. Fuel can ignite and cause serious injuries or death and damage. Fuel can also irritate skin and eyes. To prevent this, always complete "BEFORE REPAIR PROCEDURE" and "AFTER REPAIR PROCEDURE" described in this manual.** **☞ 01–14 BEFORE REPAIR PROCEDURE** **☞ 01–14 AFTER REPAIR PROCEDURE**

STEP	INSPECTION		ACTION
1	Verify following: • Vacuum connection. • Air cleaner element. • No air leaks from intake air system. • No restriction of intake air system. • Proper sealing of intake manifold and components attached to intake manifold: such as EGR valve, IAC control. • Fuel quality: • Proper octane, contamination, winter/summer blend. Are all items okay?	Yes	Go to next step.
		No	Service as necessary and repeat step 1.
2	Retrieve and record any continuous memory, KOEO and KOER DTCs. If engine stall condition exists, retrieve continuos memory and KOEO DTCs. Are there any DTCs displayed?	Yes	Go to appropriate DTC test.
		No	Go to next step.
3	Verify DTC of traction control system. Is diagnostic trouble code displayed?	Yes	Go to traction control diagnosis. ☞ 04–01 ANTILOCK BRAKE SYSTEM AND TRACTION CONTROL SYSTEM ON-BOARD DIAGNOSIS
		No	Go to next step.
4	Is engine overheating?	Yes	Go to flowchart 17 for "COOLING SYSTEM CONCERNS OVERHEATING".
		No	Go to next step.

STEP	INSPECTION		ACTION
5	Connect NGS tester to data link connector. Access RPM PID, MAF PID, TP V PID, and VSS PID. Drive vehicle with monitoring PIDs. • PRM PID: Engine speed • MAF PID ☞ 01–40B MASS AIR FLOW SENSOR INSPECTION [KL] • TP V PID ☞ 01–40B THROTTLE POSITION SENSOR INSPECTION [KL] • VSS PID ☞ 05–17B VEHICLE SPEED SENSOR INSPECTION [GF4A–EL] Are PIDs within specification?	Yes	Go to next step.
		No	RPM PID: Check CKP sensor and related harness for vibration and/or intermittent open/short circuit. MAF PID: Check for intermittent open circuit of mass air flow sensor and related wire harness. TP V PID: Check if TP sensor output increases smoothly. VSS PID: Check for intermittent open circuit of vehicle speed sensor and related wire harness.
6	Visually inspect crankshaft position (CKP) sensor and teeth of crankshaft pulley. Is CKP sensor and teeth of crankshaft pulley okay?	Yes	Go to next step.
		No	Replace malfunctioning part.
7	Measure gap between crankshaft position (CKP) sensor and teeth of crankshaft pulley. **Specification** **0.5—1.5 mm {0.02—0.05 in}** Is gap within specifications?	Yes	Go to next step.
		No	Adjust CKP sensor.
8	Check spark plug conditions. Is spark plug wet, converted with carbon or grayish white?	Yes	If spark plug is wet or converted with carbon, check for fuel leak from fuel injector. If spark plug is grayish white, check for clogged fuel injector.
		No	Install spark plugs on original cylinders. Go to next step.
9	Remove and shake PCV valve. Does PCV valve rattle?	Yes	Go to next step.
		No	Replace PCV valve.
10	Are there restrictions in exhaust system?	Yes	Check exhaust system.
		No	Go to next step.
11	Install fuel gauge between fuel filter and fuel distributor. Connect NGS tester to DLC. In OUTPUT TEST MODE select "ALL ON" and press start. Is fuel line pressure correct with ignition switch ON? **Fuel line pressure** **260—310 kPa** **{2.6—3.2 kgf/cm^2, 37—46 psi}**	Yes	Go to next step.
		No	**Zero or low:** Check fuel pump circuit. Check for open fuel pump relief valve. Check for fuel leak inside pressure regulator. Check for clogged main fuel line. **High:** Check pressure regulator for high pressure cause. Check for clogged fuel return line.
12	**Note** • Following test is for engine stalling concern with A/C on concern. If other symptom exists, go to next step. Connect pressure gauge to A/C low and high side pressure lines. Turn A/C on and measure low side and high side pressure. Are pressures within specifications? ☞ 07–10 REFIGERANT PRESSURE CHECK	Yes	Go to next step.
		No	Check follows: • Refrigerant charging amount. • A/C pressure switches. • Additional fan operation. • A/C relay.
13	Check for A/C cut off operation. Does A/C cut off work properly?	Yes	Go to next step.
		No	Check A/C cut off system.

STEP	INSPECTION		ACTION
14	Disconnect vacuum hose between purge solenoid valve and intake manifold from purge solenoid valve side. Plug opening end of vacuum hose. Drive vehicle. Does engine condition improve?	Yes	Check if purge solenoid valve sticks to open mechanically. Check evaporative emission control system.
		No	Go to next step.
15	Verify VRIS operation. Is VRIS operation okay?	Yes	Go to next step.
		No	Check follows: • Wrong connection of VRIS solenoid valves connectors. • Wrong routing of vacuum hoses. • Vacuum leaks from vacuum hoses. • VRIS actuator No.1 or No.2 stuck to open or close.
16	Visually inspect camshaft position (CMP) sensor and tooth of camshaft. Is CMP sensor and tooth of camshaft okay?	Yes	Go to next step.
		No	Replace malfunctioning part.
17	Is engine compression correct? ☞ 01–10B COMPRESSION INSPECTION [KL]	Yes	Check following: • Valve timing. • Internal transaxle component (ATX only). • Clutch (MTX only). • Brake system for dragging.
		No	Check for cause.
18	Verify test results. If okay, return to diagnostic index to service any additional symptoms.		

12	KNOCKING/PINGING – ACCELERATION/CRUISE
DESCRIPTION	Sound produced when air/fuel mixture is ignited by something other than spark plug (i.e., hot spot in combustion chamber)
POSSIBLE CAUSE	• Engine overheating due to cooling system malfunction • Inadequate engine compression • Inadequate fuel pressure • Knock sensor and related circuit malfunction **Warning** **Following troubleshooting flow chart contains fuel system diagnosis and repair procedures. Read following warnings before performing fuel system service:** • **Fuel vapor is hazardous. It can easily ignite, causing serious injury and damage. Always keep sparks and flames away from fuel.** • **Fuel line spills and leaks are dangerous. Fuel can ignite and cause serious injuries or death and damage. Fuel can also irritate skin and eyes. To prevent this, always complete "BEFORE REPAIR PROCEDURE" and "AFTER REPAIR PROCEDURE" described in this manual.** **☞ 01–14 BEFORE REPAIR PROCEDURE** **☞ 01–14 AFTER REPAIR PROCEDURE**

STEP	INSPECTION		ACTION
1	Connect NGS tester to DLC. Access ECT PID. Verify ECT PID is less than 116 °C {240.8 °F} during driving. Is ECT PID less than specification?	Yes	Go to next step.
		No	Inspect cooling system for cause of overheating.
2	Retrieve and record any continuous memory, KOEO and KOER DTCs. Are there any DTCs displayed?	Yes	Go to appropriate DTC test.
		No	Go to next step.
3	Is engine compression correct?	Yes	Go to next step.
		No	Check for cause.
4	Install fuel pressure gauge between fuel filter and fuel distributor. Start engine and run at idle. Measure fuel line pressure at idle. Is fuel line pressure correct at idle? **Fuel line pressure** **210—260 kPa** **{2.1—2.6 kgf/cm², 30—37 psi}**	Yes	Go to next step.
		No	**Zero or low:** Check fuel pump circuit. Check for open fuel pump relief valve. Check for fuel leak inside pressure regulator. Check for clogged main fuel line. **High:** Check pressure regulator for high pressure cause. Check for clogged fuel return line.
5	Measure resistance between knock sensor terminal and knock sensor body. **Specification** **Approx. 560 kΩ [20 °C {68 °F}]** Is resistance okay?	Yes	Check ignition timing.
		No	Replace knock sensor.
6	Verify test results. If okay, return to diagnostic index to service any additional symptoms.		

13	POOR FUEL ECONOMY
DESCRIPTION	Fuel economy unsatisfactory
POSSIBLE CAUSE	• Contaminated air cleaner element • Improper transmission fluid level • Poor fuel quality • Improper coolant level • Spark plug malfunction • Brake dragging • Contaminated mass airflow sensor • Exhaust system clogged • Engine cooling system malfunction • Weak spark • Erratic or no signal from camshaft position sensor • Inadequate fuel pressure • PCV valve malfunction • Improper valve timing due to timing belt skip out • Improper engine compression **Warning** **Following troubleshooting flow chart contains fuel system diagnosis and repair procedures. Read following warnings before performing fuel system service:** • **Fuel vapor is hazardous. It can easily ignite, causing serious injury and damage. Always keep sparks and flames away from fuel.** • **Fuel line spills and leaks are dangerous. Fuel can ignite and cause serious injuries or death and damage. Fuel can also irritate skin and eyes. To prevent this, always complete "BEFORE REPAIR PROCEDURE" and "AFTER REPAIR PROCEDURE" described in this manual.** **☞ 01–14 BEFORE REPAIR PROCEDURE** **☞ 01–14 AFTER REPAIR PROCEDURE**

STEP	INSPECTION		ACTION
1	Check following: • Contaminated air cleaner element. • Transmission fluid level. • Fuel quality. • Coolant level. Are all items okay?	Yes	Go to next step.
		No	Service as necessary. Repeat step 1.
2	Retrieve and record any continuous memory, KOEO and KOER DTCs. Are there any DTCs displayed?	Yes	Go to appropriate DTC test.
		No	Go to next step.
3	Connect NGS tester to DLC. Access ECT PID. Drive vehicle while monitoring PID. • ECT PID ☞ 01–40B ENGINE COOLANT TEMPERATURE SENSOR INSPECTION [KL] Is PID within specification?	Yes	Go to next step.
		No	Check for coolant leak, cooling fan and condenser fan operations or thermostat operation.
4	Is strong blue spark visible at each disconnected high-tension lead while cranking engine?	Yes	Check follows: • Spark plug(s) malfunction. • CMP sensor improperly installed. • Trigger wheel damage on camshaft. • Open or short circuit on CMP sensor. • Open or short circuit between CMP sensor and PCM. Repair or replace malfunctioning part. If okay, go to next step.
		No	Check follows: • High-tension leads. • Ignition coil and connector.

STEP	INSPECTION		ACTION
5	Install fuel pressure gauge between fuel filter and fuel distributor. Start engine and run at idle. Measure fuel line pressure at idle. Is fuel line pressure correct at idle? **Fuel line pressure** **210—260 kPa** **{2.1—2.6 kgf/cm², 30—37 psi}**	Yes	Go to next step.
		No	**Zero or low:** Check fuel pump circuit. Check for open fuel pump relief valve. Check for fuel leak inside pressure regulator. Check for clogged main fuel line. **High:** Check pressure regulator for high pressure cause. Check for clogged fuel return line.
6	Remove and shake PCV valve. Does PCV valve rattle?	Yes	Go to next step.
		No	Replace PCV valve.
7	Is there restriction in exhaust system?	Yes	Check exhaust system.
		No	Go to next step.
8	Is brake system functioning properly?	Yes	Go to next step.
		No	Check for cause.
9	Check for contaminated MAF sensor. Is there any contamination?	Yes	Replace mass air flow sensor.
		No	Go to next step.
10	Is engine compression correct? ☞ 01–10B COMPRESSION INSPECTION [KL]	Yes	Check for valve timing.
		No	Check for cause.
11	Verify test results. If okay, return to diagnostic index to service any additional symptoms.		

14	EMISSION COMPLIANCE
DESCRIPTION	Emission compliance test is failed
POSSIBLE CAUSE	• Vacuum lines leaks or blockage • Spark plug malfunction • Erratic or no signal from camshaft position sensor • PCV valve malfunction or incorrect valve installation • Exhaust system clogged • Charcoal canister damage • Improper engine compression • Cooling system malfunction • Leaks from intake manifold • Inadequate fuel pressure • EGR valve malfunction • Fuel tank ventilation system malfunction • Excessive carbon build up in combustion chamber • Improper valve timing **Warning** **Following troubleshooting flow chart contains fuel system diagnosis and repair procedures. Read following warnings before performing fuel system service:** • **Fuel vapor is hazardous. It can easily ignite, causing serious injury and damage. Always keep sparks and flames away from fuel.** • **Fuel line spills and leaks are dangerous. Fuel can ignite and cause serious injuries or death and damage. Fuel can also irritate skin and eyes. To prevent this, always complete "BEFORE REPAIR PROCEDURE" and "AFTER REPAIR PROCEDURE" described in this manual.** **☞ 01–14 BEFORE REPAIR PROCEDURE** **☞ 01–14 AFTER REPAIR PROCEDURE**

STEP	INSPECTION		ACTION
1	Check following: • Vacuum lines for leaks or blockage. • Electrical connections. • Proper maintenance schedule followed. • Intake air system and air cleaner element concerns; such as obstructions, leaks or dirty. Are all items okay?	Yes	Go to next step.
		No	Service as necessary. Repeat step 1.

STEP	INSPECTION		ACTION
2	Retrieve and record any continuous memory, KOEO and KOER DTCs. Are there any DTCs displayed?	Yes	Diagnostic trouble code displayed. Go to appropriate DTC test.
		No	Go to next step.
3	Is any other drivability concern present?	Yes	Go to appropriate flow chart.
		No	Go to next step.
4	Connect NGS tester to DLC. Access ECT PID. Warm-up engine and run it at idle. Verify ECT PID is correct. • ECT PID ☞ 01–40B ENGINE COOLANT TEMPERATURE SENSOR INSPECTION [KL] Is ECT PID correct?	Yes	Go to next step.
		No	Check cooling system.
5	Is strong blue spark visible at each disconnected high-tension lead while cranking engine?	Yes	Check following: • Spark plug(s) malfunction. • CMP sensor improperly installated. • Damage of trigger wheel on camshaft. • Open or short circuit on CMP sensor. • Open or short circuit between CMP sensor and PCM. Repair or replace malfunctioning part. If okay, go to next step.
		No	Check following: • Hightension leads. • Ignition coil and connector.
6	Install fuel pressure gauge between fuel filter and fuel distributor. Start engine and run it at idle. Measure fuel line pressure at idle. Is fuel line pressure correct at idle? **Fuel line pressure** **210—260 kPa** **{2.1—2.6 kgf/cm², 30—37 psi}**	Yes	Go to next step.
		No	**Zero or low:** Check fuel pump circuit. Check for open fuel pump relief valve. Check for fuel leak inside pressure regulator. Check for clogged main fuel line. **High:** Check pressure regulator for high pressure cause. Check for clogged fuel return line.
7	Does fuel line pressure remain at specification for 60 seconds when ignition switch is turned ON? **Fuel line pressure** **210—260 kPa** **{2.1—2.6 kgf/cm², 30—37 psi}**	Yes	Go to next step.
		No	Check pressure regulator for high pressure cause.
8	Remove and shake PCV valve. Does PCV valve rattle?	Yes	Go to next step.
		No	Replace PCV valve.
9	Check for fuel saturation inside charcoal canister. Is excess amount of liquid fuel present in canister?	Yes	Replace charcoal canister.
		No	Check fuel tank vent system. Go to next step.
10	Is there restriction in exhaust system?	Yes	Check exhaust system.
		No	Go to next step.
11	Check engine condition while tapping EGR valve housing. Does engine condition improve?	Yes	Replace EGR valve.
		No	Go to next step.
12	Verify test results. If okay, return to diagnostic index to service any additional symptoms.		

15	MIL NEVER ON
DESCRIPTION	Malfunction indicator light never on
POSSIBLE CAUSE	• MIL burned out • Blown fuse • Open circuit between battery to PCM • Open between ground and PCM • Open or short to power between MIL and PCM • Open printed circuit on instrument cluster

STEP	INSPECTION		ACTION
1	Is ROOM fuse burnt?	Yes	Repair wiring harness and replace fuse.
		No	Go to next step.
2	Connect NGS tester to DLC. Access MIL PID. Turn ignition switch ON. Does MIL PID read ON?	Yes	Go to next step.
		No	Check for open circuit between PCM and battery or ground.
3	Is there correct voltage at MIL fuse? **Specification** **More than 10.5 V**	Yes	Go to next step.
		No	Repair open in wiring harness between fuse block and ignition switch.
4	Remove MIL bulb. Is voltage correct on positive side of MIL bulb socket? **Specification** **More than 10.5 V**	Yes	Go to next step.
		No	Repair open circuit in wiring harness between fuse block and MIL bulb socket.
5	Apply 12 volts and ground to MIL light bulb. Does MIL illuminate?	Yes	Check for open circuit between MIL and PCM. If wire harness is okay, replace PCM.
		No	Replace MIL bulb.

16	HIGH OIL CONSUMPTION/LEAKS
DESCRIPTION	Oil consumption excessive
POSSIBLE CAUSE	• PCV valve malfunction • Improper engine oil viscosity • Improper dipstick • Engine internal part malfunction

STEP	INSPECTION		ACTION
1	Remove PCV valve and shake PCV valve. Does PCV valve rattle?	Yes	Go to next step.
		No	Replace PCV valve.
2	Check following: • External leaks. • Proper dipstick. • Proper engine oil viscosity. Are all items okay?	Yes	Check internal engine parts such as valves, valve guides, valve stem seals, cylinder head drain passage, piston rings.
		No	Service as necessary. Repeat step 2.

17	COOLING SYSTEM CONCERNS OVERHEATING
DESCRIPTION	Engine runs at higher than normal temperature/Overheats
POSSIBLE CAUSE	• Improper coolant level • Coolant leaks • Improper water/anti-freeze mixture • Poor radiator condition • Radiator hoses damage • Improper or damaged radiator cap • Malfunction of coolant overflow system parts • Drive belt damage • Blown fuses • Excessive pressure of A/C system • Fans reverse rotation • Thermostat malfunction • Condenser fan inoperative • Main cooling fan inoperative • Improper tension of drive belt

STEP	INSPECTION		ACTION
1	Check following: • Engine coolant level. • Coolant leaks. • Water and anti-freeze mixture. • Radiator condition. • Collapsed or restricted radiator hoses. • Radiator pressure cap. • Overflow system. • Fan rotational direction. • Fuses. Are all items okay?	Yes	Go to next step.
		No	Service as necessary. Repeat step 1.
2	Cool down engine. Turned A/C switch OFF. Connect NGS tester to DLC. Access ECT V PID. Start engine and record ECT voltage reading every 60 seconds. **Note** • When ECT voltage reverses direction trend or changes slightly (0.03 volt or less), thermostat has opened. Is thermostat opening voltage okay? **Thermostat opening voltage** **Approx. 0.6—0.9 V**	Yes	Engine coolant temperature and thermostat are okay. Go to next step.
		No	Remove thermostat from engine and verify operation. If temperature gauge on instrument cluster indicates normal operation but ECT V is not same as temperature gauge reading, check engine coolant temperature sensor. If temperature gauge on instrument cluster indicated overheating but ECT V is normal, check temperature gauge and heat gauge unit.
3	Retrieve and record any continuous memory, KOEO and KOER DTCs. Are there any DTCs displayed?	Yes	Go to appropriate DTC test.
		No	Go to next step.
4	Start engine and run it at idle. Turn A/C switch on. Does A/C compressor engage?	Yes	Go to step 6.
		No	Check following and repair or replace as necessary: • Refrigerant charging amount. • Open circuit between A/C magnet clutch and PCM. • Seized A/C magnet clutch. • A/C magnet clutch malfunction. If all items are okay, go to next step.
5	Connect NGS tester to DLC. Access ACCS PID on NGS tester. Start engine and run it at idle. Turn A/C switch on. Does ACCS PID indicate ON?	Yes	Go to next step.
		No	Check follows: • A/C pressure switch(es) operation. • A/C switch stuck open. • Open or short circuit between A/C pressure switch and PCM.

STEP	INSPECTION		ACTION
6	Start engine and run it at idle speed. Turn A/C switch on. Do condenser fan and main cooling fan operate?	Yes	Go to next step.
		No	**If condenser fan does not operate, check following:** Condenser fan relay stuck to open. Condenser fan motor malfunction. Condenser fan motor ground open. Open circuit between condenser fan motor and relay. Open circuit between condenser fan relay and PCM. Open battery power circuit for condenser fan relay. **If cooling fan motor does not operate, check following:** Cooling fan relay stuck to open. Cooling fan motor malfunction. Cooling fan motor ground open. Open circuit between cooling fan motor and relay. Open circuit between cooling fan relay and PCM. Open battery power circuit for cooing fan relay.
7	Is drive belt okay?	Yes	Go to next step.
		No	Replace drive belt.
8	Are there any leaks around heater unit in passenger compartment?	Yes	Check and service heater unit for leaks.
		No	Go to next step.
9	Are there any leaks at coolant hoses and/or radiator?	Yes	Replace malfunctioning part.
		No	Inspect engine block for leaks or blockage.
10	Verify test results. If okay, return to diagnostic index to service any additional symptoms.		

18	COOLING SYSTEM CONCERNS RUNS COLD
DESCRIPTION	Engine takes excessive period for reaching normal operating temperature
POSSIBLE CAUSE	• Thermostat malfunction • Malfunction of cooling fan system • Malfunction of condenser fan system

STEP	INSPECTION		ACTION
1	Is customer's any complaint "Lack of passenger compartment heat"?	Yes	Check A/C and heater system.
		No	Go to next step.
2	Does engine speed continue at fast idle?	Yes	Go to flowchart 8 for "FAST IDLE/RUNS ON".
		No	Go to next step.
3	Connect NGS tester to data link connector. Access ECT V PID. Start engine and record ECT signal voltage reading every 60 seconds. **Note** • When ECT signal voltage reverses direction trend or changes slightly (0.03 volt or less), thermostat has opened. Is thermostat opening voltage okay? **Thermostat opening voltage** **Approx. 0.6—0.9 V**	Yes	Check condenser fan and cooling fan operation. If both or either fan operate abnormally, check follows: • Cooling fan relay stuck to close. • Condenser fan relay stuck to close. • Short to ground between cooling fan relay and PCM. • Short to ground between condenser fan relay and PCM. • Circuit between cooling fan relay and fan motor shorts to battery supply line. • Circuit between condenser fan relay and fan motor shorts to battery supply line.
		No	Remove thermostat from engine and verify thermostat operation. If temperature gauge on instrument cluster indicates normal range but ECT V is not same as temperature gauge reading, check ECT sensor. If temperature gauge on instrument cluster indicates cold range but ECT signal voltage is normal, check temperature gauge and heat gauge unit.
4	Verify test results. If okay, return to diagnostic index to service any additional symptoms.		

19	EXHAUST SMOKE
DESCRIPTION	Blue, black, or white smoke from exhaust system
POSSIBLE CAUSE	① Blue smoke (Burning oil) • PCV valve malfunction • Internal engine oil leaks ② White smoke (Water in combustion) • Malfunction of cooling system (coolant loss) • Internal engine coolant leaks ③ Black smoke (Rich fuel mixture) • Air cleaner restricted • Fuel return line restricted • Improper engine compression • Ignition system malfunction • Intake air system collapsed or restricted • Excessive fuel pressure • Fuel injector fuel leaks **Warning** **Following troubleshooting flow chart contains fuel system diagnosis and repair procedures. Read following warnings before performing fuel system service:** • **Fuel vapor is hazardous. It can easily ignite, causing serious injury and damage. Always keep sparks and flames away from fuel.** • **Fuel line spills and leaks are dangerous. Fuel can ignite and cause serious injuries or death and damage. Fuel can also irritate skin and eyes. To prevent this, always complete "BEFORE REPAIR PROCEDURE" and "AFTER REPAIR PROCEDURE" described in this manual.** **☞ 01–14 BEFORE REPAIR PROCEDURE** **☞ 01–14 AFTER REPAIR PROCEDURE**

STEP	INSPECTION		ACTION
1	What color is smoke coming from exhaust system?	Blue	Burning oil indicated. Go to next step.
		White	Water in combustion indicated. Go to step 3.
		Black	Rich fuel mixture indicated. Go to step 4.
2	Remove and shake PCV valve. Does PCV valve rattle?	Yes	Check following: • Damaged valve guide, stems or valve seals. • Blocked oil drain passage in cylinder head. • Piston rings for not seated, seized or worn. • Damaged cylinder bore. If other driveability symptoms are present, return to diagnostic index to service any additional symptoms.
		No	Replace PCV valve.
3	Does cooling system hold pressure?	Yes	Check following: • Cylinder head gasket leaks. • Intake manifold gasket leaks. • Engine block cracked or porous. If other driveability symptoms are present, return to diagnostic index to service any additional symptoms.
		No	Check for cause.
4	Check following: • Air cleaner for restriction. • Collapsed or restricted intake air system. • Restricted fuel return line. Are all items okay?	Yes	Go to next step.
		No	Service as necessary. Repeat step 5.
5	Retrieve and record any continuous memory, KOEO and KOER DTCs. Are there any DTCs displayed?	Yes	Go to appropriate DTC test.
		No	Go to next step.

STEP	INSPECTION		ACTION
6	Install fuel pressure gauge between fuel filter and fuel distributor. Start engine and run it at idle. Measure fuel line pressure at idle. Is fuel line pressure correct at idle? **Fuel line pressure** **210—260 kPa** **{2.1—2.6 kgf/cm^2, 30—37 psi}**	Yes	Go to next step.
		No	**Zero or low:** Check fuel pump circuit. Check for open fuel pump relief valve. Check for fuel leak inside pressure regulator. Check for clogged main fuel line. **High:** Check pressure regulator for high pressure cause. Check for clogged fuel return line.
7	Does fuel line pressure remain at specification for 60 seconds when ignition switch is turned ON? **Fuel line pressure** **210—260 kPa** **{2.1—2.6 kgf/cm^2, 30—37 psi}**	Yes	Go to next step.
		No	Check pressure regulator for high pressure cause.
8	Is strong blue spark visible at each disconnected high-tension lead while cranking engine?	Yes	Check spark plug(s) and CMP sensor.
		No	Check following: • High-tension leads. • Ignition coil and connector.
9	Verify test results. If okay, return to diagnostic index to service any additional symptoms.		

20	FUEL ODOR (IN ENGINE COMPARTMENT)
DESCRIPTION	Gasoline fuel smell or visible leaks
POSSIBLE CAUSE	• Excessive fuel pressure • Fuel tank vent system blockage • Purge solenoid valve malfunction • Charcoal canister malfunction **Warning** **Following troubleshooting flow chart contains fuel system diagnosis and repair procedures. Read following warnings before performing fuel system service:** • **Fuel vapor is hazardous. It can easily ignite, causing serious injury and damage. Always keep sparks and flames away from fuel.** • **Fuel line spills and leaks are dangerous. Fuel can ignite and cause serious injuries or death and damage. Fuel can also irritate skin and eyes. To prevent this, always complete "BEFORE REPAIR PROCEDURE" and "AFTER REPAIR PROCEDURE" described in this manual.** **☞ 01–14 BEFORE REPAIR PROCEDURE** **☞ 01–14 AFTER REPAIR PROCEDURE**

STEP	INSPECTION		ACTION
1	Visually check for fuel leakage at fuel injector O-ring, pressure regulator and fuel line. Service as necessary. Install fuel pressure gauge between fuel filter and fuel delivery pipe. Start engine and run at idle. Does fuel line pressure remain at specification for 60 seconds when ignition switch is turned ON and OFF? **Fuel line pressure** **More than 150 kPa** **{1.5 kgf/cm², 21 psi}**	Yes	Go to next step.
		No	Check pressure regulator for high pressure cause.
2	Check for blockage/restriction or open between engine vacuum port and charcoal canister. Check for blockage in fuel tank vent system. Is fault indicated?	Yes	Replace vacuum hose.
		No	Go to next step.
3	Check purge solenoid valve. Is solenoid operating properly?	Yes	Go to next step.
		No	Replace purge solenoid valve.
4	Retrieve and record any continuous memory, KOEO and KOER DTCs. Are there any DTCs displayed?	Yes	Go to appropriate DTC test.
		No	Check charcoal canister for fuel saturation. If excess amount of liquid fuel present, replace charcoal canister.
5	Verify test results. If okay, return to diagnostic index to service any additional symptoms.		

21	ENGINE NOISE
DESCRIPTION	Engine noise from under hood
POSSIBLE CAUSE	① Squeal, click or chirp noise • Improper engine oil level • Improper drive belt tension ② Rattle sound noise • Loose parts ③ Hiss sound noise • Vacuum leaks • Loose spark plug • Air leaks from intake air system ④ Rumble or grind noise • Improper drive belt tensoion ⑤ Rap or roar sound noise • Exhaust system loose ⑥ Other noise • Camshaft friction gear noise • MLA noise

STEP	INSPECTION		ACTION
1	Is squeal, click or chirp sound present?	Yes	Check following: • Engine oil level. • Drive belts.
		No	Go to next step.
2	Is rumble or grind sound present?	Yes	Check drive belt.
		No	Go to next step.
3	Is rattle sound present?	Yes	Check location of rattle for loose parts.
		No	Go to next step.
4	Is hiss sound present?	Yes	Check following: • Vacuum leaks. • Spark plug loose. • Intake air system leaks.
		No	Go to next step.
5	Is rap or roar sound present?	Yes	Check exhaust system for loose parts.
		No	Go to next step.
6	Is knock sound present?	Yes	Go to flow chart 12 for "KNOCKING/PINGING".
		No	If noise comes from engine internal, check for friction gear or MLA noise.
7	Verify test results. If okay, return to diagnostic index to service any additional symptoms.		

22	VIBRATION CONCERNS (ENGINE)
DESCRIPTION	Vibration from under hood or driveline
POSSIBLE CAUSE	• Loose attaching bolts or worn parts • Components malfunctioning such as worn parts

STEP	INSPECTION		ACTION
1	Check following components for loose attaching bolts or worn parts: • Cooling fan. • Drive belt and pulleys. • Engine mounts. All items okay?	Yes	Check following systems: • Wheels. • Transaxle. • Driveline. • Suspension.
		No	Readjust or retighten engine mount installation position. Service as necessary for other parts.
2	Verify test results. If okay, return to diagnostic index to service any additional symptoms.		

23	A/C DOES NOT WORK
DESCRIPTION	A/C compressor magnetic clutch does not engage when A/C is turned on
POSSIBLE CAUSE	• Improper refrigerant charging amount • Open A/C magnet clutch • Poor ground of A/C magnet clutch • A/C relay stuck to open • Power steering stuck to short • Open circuit between A/C switch and PCM through both A/C pressure switches • Short to ground circuit between power steering pressure switch and PCM • A/C low pressure switch stuck to open • Open circuit between A/C relay and A/C magnet clutch • A/C high pressure switch stuck open • A/C compressor seized

STEP	INSPECTION		ACTION
1	Retrieve and record any continuous memory, KOEO and KOER. Are there any DTCs displayed?	Yes	Go to appropriate DTC test.
		No	Go to next step.
2	Disconnect power steering pressure switch connector. Is there continuity between connector terminal and ground?	Yes	Short to ground. Repair or replace wire harness.
		No	Check for short to ground at power steering pressure switch. If switch is okay, go to next step. If short exists, replace switch.
3	Disconnect A/C compressor connector. Start engine and turn A/C switch on. Is there correct voltage at terminal of A/C compressor magnet clutch connector? **Specification** **More than 10.5 V**	Yes	Check for ground condition of A/C compressor magnet clutch. If ground condition is okay, check for open circuit of magnet clutch.
		No	Go to next step.
4	Disconnect A/C low pressure switch and A/C high pressure switch connectors. Connect jumper between terminals of harness connectors. Connect NGS tester to DLC. Access ACCS PID on NGS tester. Turn ignition switch ON. Turn A/C switch on and set blower fan at any speed. Does ACCS PID read ON?	Yes	Check A/C high pressure switch and low pressure switch operation. Replace malfunctioning switch. If both switches okay, Go to next step.
		No	Check following(s): • A/C switch stuck to open. • Open circuit among both A/C pressure switches and PCM. • Open circuit of blower motor fan switch and resister (if blower motor does not operate).
5	Remove jumper wires from switch connectors. Reconnect connectors to both switches. Start engine and turn A/C switch on. Verify fans operation. Do both fans operate?	Yes	Check for stuck to open A/C relay. Replace as necessary.
		No	Check follows and repair or replace as necessary: • Refrigerant charging amount. • Seized A/C compressor.
6	Verify test results. If okay, return to diagnostic index to service any additional symptoms.		

24	A/C ALWAYS ON/A/C COMPRESSOR RUNS CONTINUOUSLY
DESCRIPTION	A/C compressor magnetic clutch does not disengage
POSSIBLE CAUSE	• Short to ground between A/C switch and PCM through • Short to ground circuit between A/C relay and PCM • A/C relay to magnet clutch circuit shorts to battery power • Stuck engagement • A/C relay stuck to close

STEP	INSPECTION		ACTION
1	Retrieve and record any continuous memory, KOEO and KOER DTCs. Are there any DTCs displayed?	Yes	Go to appropriate DTC test.
		No	Go to next step.
2	Start engine and run it at idle. Turn A/C switch on. Remove A/C relay. Does A/C magnet clutch disengage?	Yes	Check following: A/C relay stuck closed. Short to ground circuit between A/C relay and PCM. If both items okay, go to next step.
		No	Check if circuit between A/C relay and magnet clutch shorts to battery power circuit. If circuit is okay, check for stuck to engage magnet clutch.
3	Connect NGS tester to DLC. Access ACCS PID on NGS tester. Start engine and turn A/C switch on. Read ACCS PID while disconnecting high pressure switch connector. **Note** • ACCS PID should read OFF when disconnecting connector. If ACCS PID reading remains ON, short to ground circuit may be present. Does ACCS PID reading remain on?	Yes	Check for short to ground circuit between high pressure switch and PCM.
		No	Go to next step.
4	Reconnect high pressure switch connector. Read ACCS PID while disconnecting low pressure switch connector. **Note** • ACCS PID should read OFF when disconnecting connector. If ACCS PID reading remains ON, short to ground circuit may be present. Does ACCS PID reading remain on?	Yes	Check for short to ground circuit between low pressure switch and high pressure switch.
		No	Go to next step.
5	Reconnect low pressure switch connector. Read ACCS PID while turning off A/C switch. **Note** • ACCS PID should read OFF when turning A/C switch OFF. If ACCS PID reading remains ON, short to ground circuit may be present. Does ACCS PID reading remain on?	Yes	Check for short to ground circuit between low pressure switch and A/C switch.
		No	Check for A/C switch stuck closed.
6	Verify test results. If okay, return to diagnostic index to service any additional symptoms.		

25	A/C DOES NOT CUT OFF UNDER WIDE OPEN THROTTLE CONDITIONS		
DESCRIPTION	A/C compressor magnetic clutch does not disengage under wide open throttle		
POSSIBLE CAUSE	• Throttle position (TP) sensor malfunction • Throttle position (TP) sensor misadjustment • Throttle position (TP) sensor loosely installed		
STEP	INSPECTION		ACTION
1	Does A/C turn off when A/C switch is turned off?	Yes	Go to next step.
		No	Go to flowchart 24 for "A/C ALWAYS ON/A/C COMPRESSOR RUNS CONTINUOUSLY".
2	Retrieve and record any continuous memory, KOEO and KOER DTCs. Are there any DTCs displayed?	Yes	Go to appropriate DTC test.
		No	Check if TP sensor for proper adjustment. Readjust TP sensor as necessary.
3	Verify test results. If okay, return to diagnostic index to service any additional symptoms.		

26	EXHAUST SULPHUR SMELL
DESCRIPTION	Rotten egg smell (sulphur) from exhaust **Note** • Some slight sulphur smell may be normal. Catalyst with less than 8,000—16,000 km {5,000 to 10,000 miles} mileage is likely to have sulphur smell concern due to highly active state of new catalysts. Replacing catalyst if no problem is found may actually make symptom worse.
POSSIBLE CAUSE	• Electrical connectors disconnected or poor connection • Vacuum lines disconnected or improper connection • Charcoal canister malfunction • Improper fuel pressure **Warning** **Following troubleshooting flow chart contains fuel system diagnosis and repair procedures. Read following warnings before performing fuel system service:** • **Fuel vapor is hazardous. It can easily ignite, causing serious injury and damage. Always keep sparks and flames away from fuel.** • **Fuel line spills and leaks are dangerous. Fuel can ignite and cause serious injuries or death and damage. Fuel can also irritate skin and eyes. To prevent this, always complete "BEFORE REPAIR PROCEDURE" and "AFTER REPAIR PROCEDURE" described in this manual.** **☞ 01–14 BEFORE REPAIR PROCEDURE** **☞ 01–14 AFTER REPAIR PROCEDURE**

STEP	INSPECTION		ACTION
1	Are any drivability or exhaust smoke concern present?	Yes	Go to appropriate flow chart.
		No	Go to next step.
2	Check following: • Electrical connections. • Vacuum lines. Are all items okay?	Yes	Go to next step.
		No	Service as necessary. Repeat step 2.
3	Retrieve and record any continuous memory, KOEO and KOER DTCs. Are there any DTCs displayed?	Yes	Go to appropriate DTC test.
		No	Go to next step.
4	Install fuel pressure gauge between fuel filter and fuel delivery pipe. Start engine and run it at idle. Is fuel line pressure correct at idle? **Fuel line pressure** **210—260 kPa** **{2.1—2.6 kgf/cm², 30—37 psi}**	Yes	Go to next step.
		No	**Zero or low:** Check fuel pump circuit. Check for open fuel pump relief valve. Check for fuel leak inside pressure regulator. Check for clogged main fuel line. **High:** Check pressure regulator for high pressure cause. Check for clogged fuel return line.
5	Does fuel line pressure remain at specification for 60 seconds when ignition switch is turned ON? **Fuel line pressure** **210—260 kPa** **{2.1—2.6 kgf/cm², 30—37 psi}**	Yes	Go to next step.
		No	Check pressure regulator for high pressure cause.
6	Check charcoal canister for fuel saturation. Is excess amount of liquid fuel present in canister?	Yes	Replace charcoal canister.
		No	Check fuel tank vent system. If fuel tank vent system is okay: Since sulphur content can vary in different fuels, suggest trying different brand. If fuel tank vent system is not okay: Repair or replace malfunctioning part.

27	INTERMITTENT CONCERNS		
DESCRIPTION	Symptom occurs randomly and is difficult to diagnose		
STEP	INSPECTION		ACTION
1	Talk to customer and fill out "Check Sheet." Review vehicle service history. Does vehicle have number of previous repairs and components replaced for certain symptom?	Yes	Go to next step.
		No	Go to diagnostic chart for symptom.
2	Key on, engine off. Connect NGS tester to DLC. Access PIDs based on information from Symptom Charts. Lightly tap on component while viewing PID values. Wiggle and pull each component wire (Signal, Signal Return and constant voltage, if applicable) at component. Wiggle and pull each sensor wire (Signal, Signal Return and constant voltage, if applicable) from component back to PCM connector. Look for abrupt changes in PID values. Are any PID values out of range or suddenly drop out and back into range?	Yes	Possible wiring or component problem. Check each wire for corrosion, bent or loose terminals and poor wire terminal crimps. Service as necessary. Otherwise, replace component. Verify repair.
		No	Go to next step.
3	Continue to monitor information from previous step. Key on, engine running. Lightly tap on component while viewing PID values. Also wiggle and pull each component wire (Signal, Signal Return and constant voltage, if applicable) from component back to PCM connector. Look for abrupt changes in PID values. Are any PID values out of range or suddenly drop out and back into range?	Yes	Possible wiring or component problem. Check each wire for corrosion, bent or loose terminals and poor wire terminal crimps. Service as necessary. Otherwise, replace component. Verify repair.
		No	Go to next step.
4	Continue to monitor PIDs listed in previous step. With engine still running, continue to individually water soak wires and connectors which are related to monitor items. Look for abrupt changes in PID values or engine running conditions. Are any PID values out of range or suddenly drop out and back into range or was there noticeable engine misfire/stumble?	Yes	Fault area is identified. If fault occurred while spraying on component, replace part and verify repair. If unable to verify, reinstall original part. If fault occurred while spraying wiring, check each circuit wire for corrosion, bent or loose terminals and poor wire terminal crimps. Service as necessary. If fault occurred while spraying vacuum line. Service as necessary. Verify repair.
		No	Go to next step.
5	Continue to monitor information from previous step. Drive vehicle under "Check Sheet" condition. Look for abrupt changes in PID values. Are any PID values out of range or suddenly drop out and back into range?	Yes	Possible wiring or component problem. Check each wire for corrosion, bent or loose terminals and poor wire terminal crimps. Service as necessary. Otherwise, replace component. Verify repair.
		No	Reconfirm "Check Sheet" and reselect related PIDs.

29	FUEL REFILL ISSUES
DESCRIPTION	Fuel tank does not refill smoothly
POSSIBLE CAUSE	Clogged evaporative emission pipes Non-return valve malfunction Pressure regulator malfunction Improper use of fuel gun Inadequate fuel refilling speed **Warning** **Following troubleshooting flow chart contains fuel system diagnosis and repair procedures. Read following warnings before performing fuel system service:** • **Fuel vapor is hazardous. It can easily ignite, causing serious injury and damage. Always keep sparks and flames away from fuel.** • **Fuel line spills and leaks are dangerous. Fuel can ignite and cause serious injuries or death and damage. Fuel can also irritate skin and eyes. To prevent this, always complete "BEFORE REPAIR PROCEDURE" and "AFTER REPAIR PROCEDURE" described in this manual.** **☞ 01–14 BEFORE REPAIR PROCEDURE** **☞ 01–14 AFTER REPAIR PROCEDURE**

STEP	INSPECTION		ACTION
1	Retrieve and record any continuous memory, KOEO and KOER DTCs. Are there any DTCs displayed?	Yes	Go to appropriate DTC text.
		No	Go to next step.
2	Remove fuel filler pipe. Make sure that the non-return valve is installed properly. Inspect the non-return valve operation. ☞ 01–14 NON-RETURN VALVE INSPECTION Is the non-return valve okay?	Yes	Check follows: • Improper use of fuel gun. • Inadequate fuel refilling speed. • Fuel tank pressure control valve.
		No	**If the non-return valve is installed improperly:** Reinstall the non-return valve to the proper position. **If the non-return valve does not operate properly:** Replace the non-return valve.

30	FUEL REFILLING SHUT OFF ISSUES
DESCRIPTION	Fuel refill does not shut off properly.
POSSIBLE CAUSE	Clogged evaporative emission pipes Non-return valve malfunction Fuel shut off valve malfunction Fuel gun malfunction Fuel gun does not insert correctly **Warning** **Following troubleshooting flow chart contains fuel system diagnosis and repair procedures. Read following warnings before performing fuel system service:** • **Fuel vapor is hazardous. It can easily ignite, causing serious injury and damage. Always keep sparks and flames away from fuel.** • **Fuel line spills and leaks are dangerous. Fuel can ignite and cause serious injuries or death and damage. Fuel can also irritate skin and eyes. To prevent this, always complete "BEFORE REPAIR PROCEDURE" and "AFTER REPAIR PROCEDURE" described in this manual.** **☞ 01–14 BEFORE REPAIR PROCEDURE** **☞ 01–14 AFTER REPAIR PROCEDURE**

STEP	INSPECTION		ACTION
1	Retrieve and record any continuous memory, KOEO and KOER DTCs. Are there any DTC displayed?	Yes	Go to appropriate DTC test.
		No	Go to next step.
2	Remove fuel filer pipe. Make sure that the non-return valve is installed properly. Inspect the non-return valve operation. ☞ 01–14 NON-RETURN VALVE INSPECTION Is the non-return valve okay?	Yes	Check as follows: • Fuel gun malfunction. • Fuel gun does not insert correctly. • Fuel shut off valve.
		No	**If the non-return valve is installed improperly:** Reinstall the non-return valve to the proper position. **If the non-return valve does not operate properly:** Replace the non-return valve.

31	CONSTANT VOLTAGE
DESCRIPTION	Incorrect constant voltage voltage
POSSIBLE CAUSE	Constant voltage circuit malfunction

STEP	INSPECTION		ACTION
1	Was constant voltage greater than 6.0 volts when measured in previous step?	Yes	Go to step 15.
		No	Go to next step.
2	Key on, engine off. Is voltage across battery terminals greater than 10.5 volts?	Yes	Go to next step.
		No	Inspect charging system.
3	Key on, engine off. Disconnect sensor where constant voltage circuit check failed. Measure voltage between battery positive terminal and ground circuit at appropriate sensor connector. Is voltage greater than 10.5 volts and within 1.0 volt of battery voltage?	Yes	Go to next step.
		No	Go to step 10.
4	**Note** • Purpose of this step is to determine if NGS tester is able to communicate with PCM. Key on, engine off. Attempt to access ECT PID. Can ECT PID be accessed?	Yes	Go to step 9.
		No	Go to next step.
5	Key off. Disconnect TP sensor connector. Disconnect VRIS solenoid valve No.1 connector. Key on, engine off. Measure voltage between power circuit at VRIS solenoid valve No.1 solenoid connector and battery negative terminal. Is voltage greater than 10.5 volts?	Yes	Reconnect VRIS solenoid valve No.1 solenoid connector. Go to next step.
		No	Repair open power circuit.
6	Key OFF. Leave TP sensor disconnected. Disconnect EGR boost sensor connector. Key on, engine off. Measure voltage between constant voltage and ground circuits at TP sensor connector. Is voltage between 4.0 and 6.0 volts?	Yes	Replace EGR boost sensor.
		No	Go to step 7.
7	Key OFF. Disconnect TP sensor connector. Install breakout box. Leave PCM disconnected. Key on, engine off. Measure voltage between test pin 71 and test pin 77 at breakout box. Is voltage greater than 10.5 volts?	Yes	Go to next step.
		No	Repair open power circuit between PCM and main relay.
8	Key OFF. Leave TP sensor connector disconnected. Disconnect NGS tester from DLC. Measure resistance between test pin 90 and test pins 51/103 at breakout box. Is resistance greater than 10,000 ohms?	Yes	Replace PCM.
		No	Repair constant voltage circuit short to ground.
9	Key off. Disconnect sensor connector where constant voltage circuit check failed. Install breakout box. Leave PCM disconnected. Measure resistance between test pin 90 and constant voltage circuit at appropriate sensor connector. Is resistance less than 5.0 ohms?	Yes	Replace PCM.
		No	Repair open constant voltage circuit.

STEP	INSPECTION		ACTION
10	**Note** • Purpose of this step is to determine if NGS tester is able to communicate with PCM. Key ON, engine off. Attempt to access ECT PID. Can ECT PID be accessed?	Yes	Go to next step.
		No	Go to step 13.
11	Are KOEO DTCs present for two or more sensors connected to ground circuit? **Sensors connected to ground circuit:** EGR boost sensor, TP sensor, IAT sensor, ECT sensor, FTP sensor, TR switch, HO2S (Front RH), HO2S (Front LH), H2OS (Middle), H2OS (Rear), clutch switch, PSP switch, ATF Temperature sensor.	Yes	Go to next step.
		No	Repair open fround circuit to sensor where constant voltage circuit check failed.
12	Key OFF. Disconnect NGS tester from DLC. Disconnect sensor connector where constant voltage circuit check failed. Install breakout box. Leave PCM disconnected. Measure resistance between ground circuit at appropriate sensor connector and test pin 91 at breakout box. Is resistance less than 5.0 ohms?	Yes	Reconnect sensor connector. Go to next step.
		No	Repair open ground circuit.
13	Key OFF. Disconnect NGS tester from DLC. Install breakout box. Leave PCM disconnected. Measure resistance between battery negative terminal and test pins 51/76/77/103 at breakout box. Is each resistance less than 5.0 ohms?	Yes	Go to next step.
		No	Repair open ground circuit to ground.
14	Key OFF. Connect PCM to breakout box. Measure resistance between test pin 91 and test pins 51/76/77/103 at breakout box. Is each resistance less than 5.0 ohms?	Yes	Ground circuits are okay.
		No	Replace PCM.
15	Key OFF. Disconnect sensor connector where constant voltage check failed. Disconnect TP sensor, fuel tank pressure sensor and EGR boost sensor connectors. Disconnect PCM connector. Key ON, engine off. Measure voltage between constant voltage circuit at TP sensor connector and battery negative terminal. Is voltage less than 0.5 volts?	Yes	Replace PCM.
		No	Repair constant voltage short to power in harness.

ENGINE DIAGNOSTIC INSPECTION [KL]

W6U101W07

Spark Plug Condition Check

Purpose

Checking spark plugs condition, can determine whether problem is related to a specific cylinder possibly all cylinders.

Procedure

1. Remove the spark plug.
2. Check spark plug condition.
3. Go to appropriate troubleshooting chart for further information.

Spark plug condition	Troubleshooting chart
Specific plug is wet or converted with carbon	1 "Wet/carbon stuck on specific plug"
Specific plug looks grayish white	2 "Grayish white with specific plug"
All plugs are wet or covered with carbon	3 "Wet/carbon stuck on all plugs"
All plugs look grayish white	4 "Grayish white with all plugs"

1 Wet/carbon stuck on specific plug

[TROUBLESHOOTING HINTS]
① Spark-No spark visible or spark weak
② Air/fuel mixture-Excessive fuel injection volume
③ Compression-No compression, low compression
Others
① Faulty spark plug

Warning
Following troubleshooting flow chart contains fuel system diagnosis and repair procedures. Read following warnings before performing fuel system service:
- **Fuel vapor is hazardous. It can easily ignite, causing serious injury and damage. Always keep sparks and flames away from fuel.**
- **Fuel line spills and leaks are dangerous. Fuel can ignite and cause serious injuries or death and damage. Fuel can also irritate skin and eyes. To prevent this, always complete "BEFORE REPAIR PROCEDURE" and "AFTER REPAIR PROCEDURE" described in this manual.**
  ☞ 01–14 BEFORE REPAIR PROCEDURE
  ☞ 01–14 AFTER REPAIR PROCEDURE

STEP	INSPECTION		ACTION
1	Is spark plug wet/covered with carbon by engine oil?	Yes	Working up and down check all areas related to oil.
		No	Go to next step.
2	Check spark plug for following. • Cracked insulator. • Heating value. • Air gap. • Worn electrode. Is spark plug okay?	Yes	Go to next step.
		No	Replace spark plug.
3	Carry out spark test at suspected faulty cylinder. Is a strong blue spark visible? (Compare with normal cylinder)	Yes	Go to next step.
		No	Repair or replace.
4	Check compression pressure at suspected faulty cylinder. Is compression pressure correct? ☞ 01–10B COMPRESSION INSPECTION [KL]	Yes	Go to next step.
		No	Repair or replace.
5	Check fuel injector resistance at suspected faulty cylinder. Is resistance correct? **Specification** **12—16 kΩ [20 °C {68 °F}]**	Yes	Go to next step.
		No	Replace fuel injector.

STEP	INSPECTION		ACTION
6	Check fuel injection control signal at suspected faulty cylinder. Is terminal voltage correct? (Compare with normal cylinder) **Specification** **B+**	Yes	Check fuel injector for following. • Leakage. • Injection volume.
		No	Repair or replace.

2	Grayish white with specific plug

[TROUBLESHOOTING HINTS]
① Air/fuel mixture-Insufficient fuel injection volume
Others
① Faulty spark plug

Warning
Following troubleshooting flow chart contains fuel system diagnosis and repair procedures. Read following warnings before performing fuel system service:
- **Fuel vapor is hazardous. It can easily ignite, causing serious injury and damage. Always keep sparks and flames away from fuel.**
- **Fuel line spills and leaks are dangerous. Fuel can ignite and cause serious injuries or death and damage. Fuel can also irritate skin and eyes. To prevent this, always complete "BEFORE REPAIR PROCEDURE" and "AFTER REPAIR PROCEDURE" described in this manual.**
  ☞ 01–14 BEFORE REPAIR PROCEDURE
  ☞ 01–14 AFTER REPAIR PROCEDURE

STEP	INSPECTION		ACTION
1	Check spark plug for following. • Heating value. • Air gap. Are they okay?	Yes	Go to next step.
		No	Replace spark plug.
2	Check operation of fuel injector at suspected faulty cylinder. Is operation sound heard?	Yes	Go to next step.
		No	Repair or replace.
3	Check fuel injector resistance at suspected faulty cylinder. Is resistance correct? **Specification** **12—16 kΩ [20 °C {68 °F}]**	Yes	Go to next step.
		No	Replace fuel injector.
4	Check fuel injector control signal at suspected faulty cylinder. Is terminal voltage correct? (Compare with normal cylinder) **Specification** **B+**	Yes	Check fuel injection volume at suspected faulty cylinder.
		No	Repair or replace.

3	Wet/carbon stuck on all plugs

[TROUBLESHOOTING HINTS]
① Spark-Spark weak
② Air/fuel mixture-Too rich
③ Compression-Low compression
Others
① Clogs in intake/exhaust system

Warning
Following troubleshooting flow chart contains fuel system diagnosis and repair procedures. Read following warnings before performing fuel system service:
- **Fuel vapor is hazardous. It can easily ignite, causing serious injury and damage. Always keep sparks and flames away from fuel.**
- **Fuel line spills and leaks are dangerous. Fuel can ignite and cause serious injuries or death and damage. Fuel can also irritate skin and eyes. To prevent this, always complete "BEFORE REPAIR PROCEDURE" and "AFTER REPAIR PROCEDURE" described in this manual.**
  ☞ 01–14 BEFORE REPAIR PROCEDURE
  ☞ 01–14 AFTER REPAIR PROCEDURE

STEP	INSPECTION		ACTION
1	Is air cleaner element free of clogs?	Yes	Go to next step.
		No	Replace air cleaner element.
2	Carry out spark test. Is a strong blue spark visible at each cylinder?	Yes	Go to next step.
		No	Repair or replace.
3	Carry out fuel pressure inspection. Is fuel pressure correct?	Yes	Go to next step.
		No	Repair or replace.
4	Check following PID. • MAF PID. ☞ 01–40B MASS AIR FLOW SENSOR INSPECTION [KL] • ECT PID. ☞ 01–40B ENGINE COOLANT TEMPERATURE SENSOR INSPECTION [KL] • HO2S11, HO2S12, HO2S21, HO2S13. ☞ 01–40B HEATED OXYGEN SENSOR INSPECTION [KL] (When engine can be started). Are terminals okay?	Yes	Go to next step.
		No	Repair or replace.
5	Carry out purge control inspection (When engine can be started). Is purge control correct? **Fuel line pressure** **260—310 kPa {2.6—3.2 kgf/cm², 37—46 psi} at ignition switch ON**	Yes	Go to next step.
		No	Repair or replace.
6	Carry out compression inspection. Is compression correct? ☞ 01–10B COMPRESSION INSPECTION [KL]	Yes	Check clogs in exhaust system.
		No	Repair or replace.

4	Grayish white with all plugs

[TROUBLESHOOTING HINTS]
① Air/fuel mixture-too lean

Warning
Following troubleshooting flow chart contains fuel system diagnosis and repair procedures. Read following warnings before performing fuel system service:
- **Fuel vapor is hazardous. It can easily ignite, causing serious injury and damage. Always keep sparks and flames away from fuel.**
- **Fuel line spills and leaks are dangerous. Fuel can ignite and cause serious injuries or death and damage. Fuel can also irritate skin and eyes. To prevent this, always complete "BEFORE REPAIR PROCEDURE" and "AFTER REPAIR PROCEDURE" described in this manual.**
  ☞ 01–14 BEFORE REPAIR PROCEDURE
  ☞ 01–14 AFTER REPAIR PROCEDURE

STEP	INSPECTION		ACTION
1	When engine cannot be started, check intake-air system for air leakage. When engine can be started, carry out intake manifold vacuum inspection. Is air sucked in from intake-air system?	Yes	Repair or replace.
		No	Go to next step.
2	Carry out fuel pressure inspection. Is fuel pressure correct? **Fuel line pressure** **260—310 kPa {2.6—3.2 kgf/cm², 37—46 psi} at ignition switch ON**	Yes	Check following PID. • MAF PID. ☞ 01–40B MASS AIR FLOW SENSOR INSPECTION [KL] • ECT PID. ☞ 01–40B ENGINE COOLANT TEMPERATURE SENSOR INSPECTION [KL] • HO2S11, HO2S12, HO2S21, HO2S13 PID. ☞ 01–40B HEATED OXYGEN SENSOR INSPECTION [KL] • (When engine can be started). • Check for PCM ground condition.
		No	Repair or replace.

ENGINE SYSTEM INSPECTION [KL]

W6U101W08

Intake Manifold Vacuum Inspection

1. Verify air intake hoses are installed properly.
2. Start the engine and run at idle.
3. Measure the intake manifold vacuum by using a vacuum gauge.

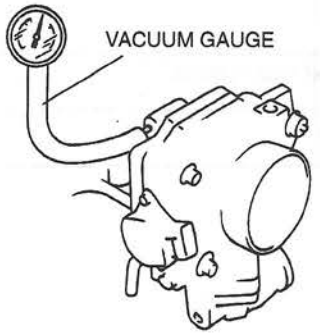

W6U101WHQ

Specification
Less than –60 kPa {–450 mmHg, –18 inHg}

4. If not as specified, check following.
   - Air suction at:
     Throttle body installation point.
     Intake manifold installation point.
     PCV valve installation point.
   - Fuel injector insulator.
   - Accelerator cable free play.
   - Engine compression (Refer to 01–01B COMPRESSION INSPECTION [KL].

Fuel Injector Operation Inspection

1. Warm up the engine and run at idle (or cranking if it does not start.)
2. Listen for the operational sound of each fuel injector with a soundscope.

Note
- Compare the sound of each fuel injector because of the difficulty of verifying the sound of individual fuel injectors.

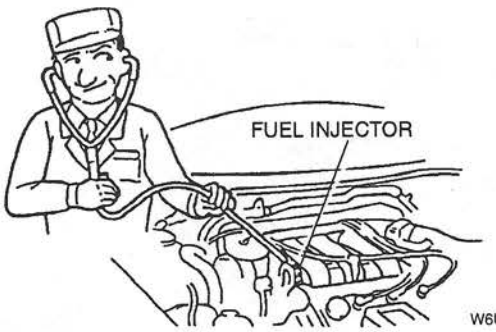

Idle Air Control Valve Inspection

1. Start the engine and run it at idle.
2. Disconnect the IAC valve connector and verify if the engine speed drops or engine stalls.
3. If engine speed does not drop or does not stall, check followings.
   - Check IAC valve. (Refer to 01–13 IDLE AIR CONTROL VALVE INSPECTION.)
   - Check IAC valve air passage.
   - Check open or short circuit between IAC valve and PCM.
4. Warm up the engine to normal operating temperature and run it at idle.
5. Turn the electrical loads ON and verify that the engine speed is within the specification.

Load condition	Idle speed
No load	550—750
A/C ON	675—975
P/S ON*1	550—750
E/L ON*2	550—750

*1 : Steering wheel fully turned.

*2 : When all of the following electrical loac conditions are met, but other condition's idle speed is the same as a no load condition.

- Headlight
- Cooling fan
- Blower motor
- A/C switch and fan switch ON

Note

- Excludes temporary idle speed drop immediately after the electrical loads are turned ON.

6. If not as specified, check the related switches and wiring harnesses.

Fuel Pressure Hold Inspection

Warning

- **Fuel line spills and leaks are dangerous. Fuel can ignite and cause serious injuries or death and damage. Fuel can also irritate skin and eyes. To prevent this, always complete the "BEFORE REPAIR PROCEDURE" and "AFTER REPAIR PROCEDURE" (Refer to 01–14 BEFORE REPAIR PROCEDURE, 01–14 AFTER REPAIR PROCEDURE).**

1. Disconnect the negative battery cable.
2. Install a fuel pressure gauge between the fuel filter and the main fuel hose. (Install clamps as shown.)

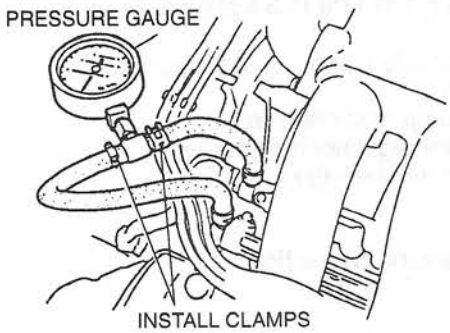

3. Disconnect the negative battery cable.
4. Remove the fuel pump relay.

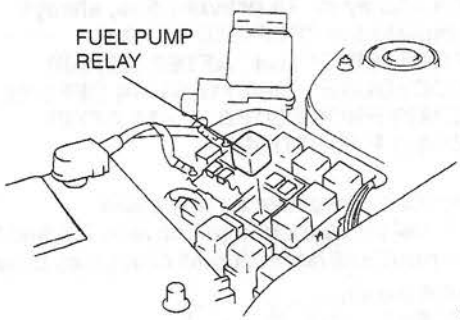

Caution

- **Connecting the wrong fuel pump relay socket terminals may possibly cause a malfunction. Carefully connect the specified terminals only.**

5. Connect fuel pump relay socket terminal 30 and 87 by using a jumper wire.

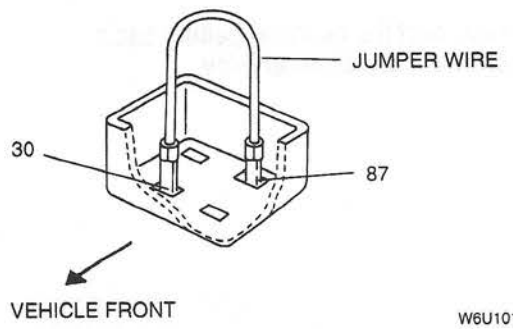

Caution
- **Before connecting the negative battery cable be sure all fuel connections, clamps and fittings are secure. Fuel pump will operate at full pressure anytime the cable is connected to the battery. When the cable makes contact, it is sure to arc and create a danger of ignition or explosion.**

6. Connect the negative battery cable for **10 seconds** to operate the fuel pump.
7. Disconnect the negative battery cable and remove the jumper wire.
8. Observe the fuel pressure after 5 minutes.

Fuel pressure
More than 147 kPa {1.5 kgf/cm^2, 21 psi}

9. If not as specified, perform the following inspections.
   - Fuel pump hold pressure.
   - Pressure regulator hold pressure.
   - Injector fuel leakage.

Fuel Line Pressure Inspection

Warning
- **Fuel line spills and leaks are dangerous. Fuel can ignite and cause serious injuries or death and damage. Fuel can also irritate skin and eyes. To prevent this, always complete the "BEFORE REPAIR PROCEDURE" and "AFTER REPAIR PROCEDURE" (Refer to 01–14 BEFORE REPAIR PROCEDURE, 01–14 AFTER REPAIR PROCEDURE).**

1. Disconnect the negative battery cable.
2. Install a fuel pressure gauge between the fuel filter and the main fuel hose. (Install clamps as shown.)

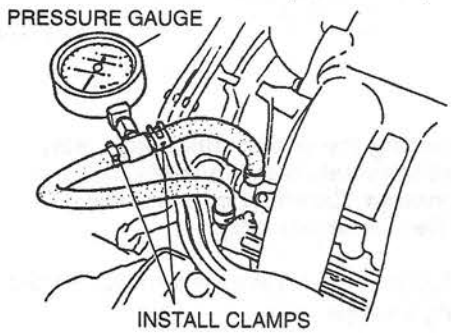

W6U101WKT

3. Disconnect the negative battery cable.
4. Remove the fuel pump relay.

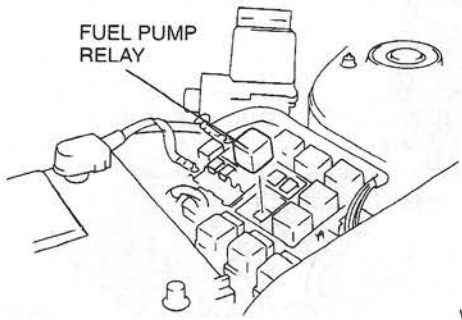

W6U101WKU

Caution
- **Connecting the wrong fuel pump relay socket terminals may possibly cause a malfunction. Carefully connect the specified terminals only.**

5. Connect fuel pump relay socket terminal 30 and 87 by using a jumper wire.

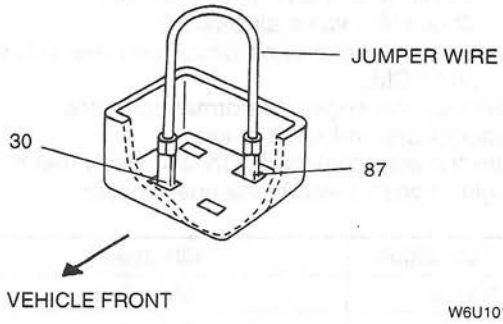

W6U101WKW

Caution
- **Before connecting the negative battery cable be sure all fuel connections, clamps and fittings are secure. Fuel pump will operate at full pressure anytime the cable is connected to the battery. When the cable makes contact, it is sure to arc and create a danger of ignition or explosion.**

6. Connect the negative battery cable to operate the fuel pump.
7. Measure the fuel line pressure.

Fuel line pressure
260—310 kPa
{2.6—3.2 kgf/cm^2, 37—46 psi}

8. If not as specified, perform the following inspections.
   - Fuel pump maximum pressure.
   - Fuel line clogging and restriction.
   - Fuel filter clogging and restriction.
   - Pressure regulator hold pressure.

Pressure Regulator Control Inspection

Warning

- **Fuel line spills and leaks are dangerous. Fuel can ignite and cause serious injuries or death and damage. Fuel can also irritate skin and eyes. To prevent this, always complete the "BEFORE REPAIR PROCEDURE" and "AFTER REPAIR PROCEDURE" (Refer to 01–14 BEFORE REPAIR PROCEDURE, 01–14 AFTER REPAIR PROCEDURE).**

1. Install the fuel pressure gauge.

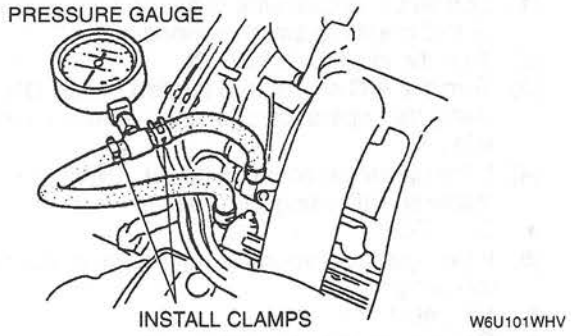

2. Measure the fuel pressure under the following conditions:

Specifications

	Fuel pressure (kPa {kgf/cm², psi})		
Idling	210—260 {2.1—2.6, 30—37}	210—260 {2.1—2.6, 30—37}	260—310 {2.6—3.2, 37—46}
During 120 sec. of hot start	260—310 {2.6—3.2, 37—46}		
After 120 sec. of hot start	210—260 {2.1—2.6, 37—46}	210—260 {2.1—2.6, 30—37}	260—310 {2.6—3.2, 37—46}
Pressure regulator control condition	Normal	Not normal (Perform Inspection 1)	Not normal (Perform Inspection 2)

3. If the fuel pressure is not within the specification, carry out either Inspection 1 or Inspection 2 as required.

Inspection 1

1. Connect the **SSTs** (NGS tester) to the DLC.

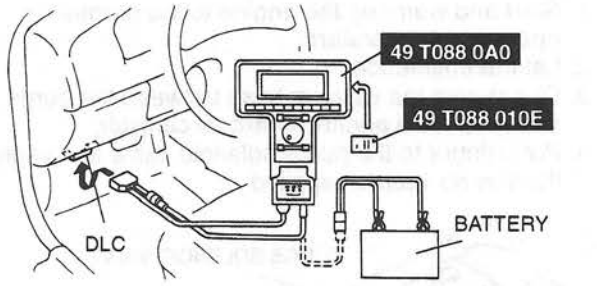

2. Access the following PIDs.
   - ECT PID. (Refer to 01–40B ENGINE COOLANT TEMPERATURE SENSOR INSPECTION [KL])
   - IAT PID. (Refer to 01–40B INTAKE AIR TEMPERATURE SENSOR INSPECTION [KL])
   - TP V PID. (Refer to 01–40B THROTTLE POSITION SENSOR INSPECTION [KL])
3. Check PID value.
4. If okay, check:
   - Pressure regulator.
   - PRC solenoid valve.
   - Wiring between PRC solenoid valve and PCM terminal 19 (Open circuit).
   - Wiring between main relay and PRC solenoid valve (open circuit).

Inspection 2

1. Connect the **SSTs** (NGS tester) to the DLC.

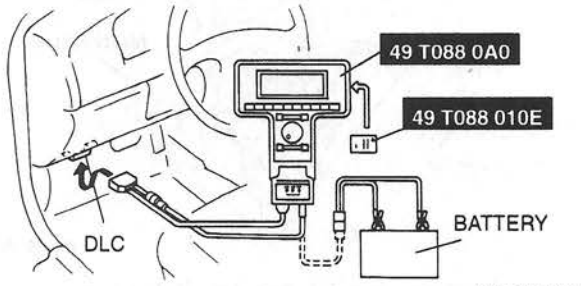

2. Access the following PIDs.
   - ECT PID. (Refer to 01–40B ENGINE COOLANT TEMPERATURE SENSOR INSPECTION [KL])
   - IAT PID. (Refer to 01–40B INTAKE AIR TEMPERATURE SENSOR INSPECTION [KL])
3. Check PID value.
4. If okay, check:
   - Loose or damaged vacuum hose between the pressure regulator, PRC solenoid valve, and intake manifold.
   - PRC solenoid valve.
   - Wiring between PRC solenoid valve and PCM terminal 19 (short circuit).

Purge Control Inspection

1. Start and warm up the engine to the normal operating temperature.
2. Let the engine idle.
3. Disconnect the vacuum hose between the purge solenoid valve and the charcoal canister.
4. Put a finger to the purge solenoid valve and verify there is no vacuum applied.

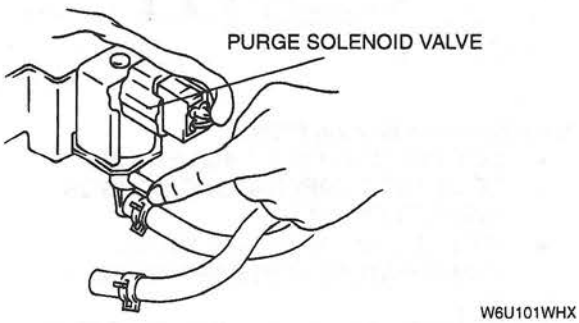

5. If there is vacuum:
   - Check the purge solenoid valve.
   - Check for loose or damaged vacuum hose.
   - Check wiring between purge solenoid valve and PCM terminal 67 (short circuit).

Main Relay Operation Inspection

1. Verify the main relay clicks when the ignition switch is turned to ON and OFF.

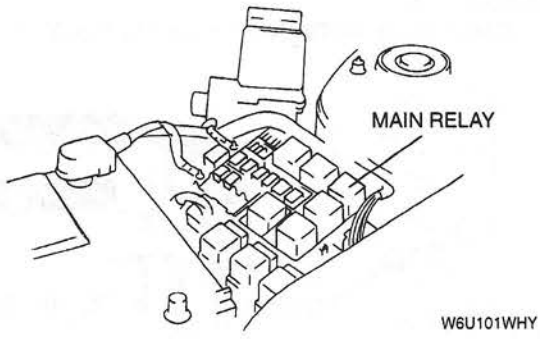

2. If there is no sound, inspect the following:
   - Main relay.
   - Harness and connector between ignition switch and main relay.

Ignition Timing Control Inspection

1. Connect a timing light to the engine.
2. Crank the engine.
3. Verify that the timing mark (yellow) on the crankshaft pulley and the mark on the timing belt cover are aligned.

   Specification
   BTDC 4—16° (10 ± 6°)

4. Increase engine speed and verify ignition timing is advanced.

A/C Cut Off Control Inspection

1. Start the engine and let it idle.
2. Turn the A/C switch and the fan switch ON.
3. Check if the operation sound of the A/C compressor electromagnetic clutch is heard. (A/C compressor starts to work.)
4. Fully open the throttle valve. Check if the operation sound the A/C compressor magnetic clutch is heard. (A/C compressor stops to work.) Then, 3—6 seconds after, check if the operation sound of the A/C compressor electromagnetic clutch is heard.
5. Turn the A/C switch and the fan switch OFF.
6. If the operation sound is not heard, do as follows.
   (1) Connect a jumper wire between both terminals of A/C pressure switch connector.
   (2) Turn the ignition switch ON.
   (3) Turn the A/C switch and the fan switch ON. Verify that operation sound is heard from A/C relay.
   (4) If the operation sound is heard, check the following PID using NGS tester.
   - TP V PID.

   (5) If the operation sound is not heard, check the following.
   - A/C relay.
   - Open or short to ground circuit in wiring harnesses and connectors (Main relay — A/C relay — PCM terminal 69)
   - A/C related parts.

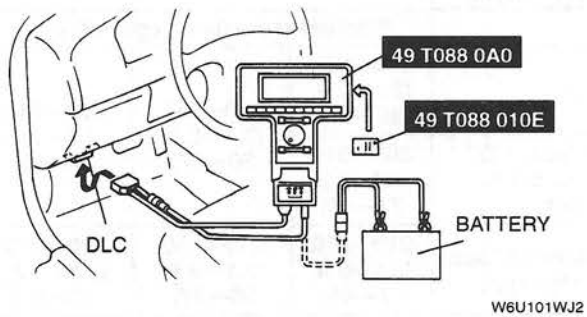

Spark Test

1. Disconnect the fuel pump relay connector.
2. Verify each high-tension lead and connector is connected properly.
3. Inspect the ignition system in the following procedure.

Warning

- **High voltage in the ignition system can cause strong electrical shock which can result in serious injury. Avoid direct contact to the vehicle body during the following spark test.**

STEP	INSPECTION		ACTION
1	Remove hightension lead from spark plug. Hold high-tension lead with installed pliers 5—10 mm {0.20—0.39 in} from ground. Turn ignition switch to START and verify that there is a strong blue spark. (Check each cylinder)	Yes	Ignition system okay.
		No	If some cylinders do not spark, go to step 2. If all cylinders do not spark, go to step 3.
2	Is hightension lead resistance correct? **Specification** **16 kΩ/m**	Yes	Check for crack or damage of hightension lead and ignition coil.
		No	Replace hightension lead.
3	Does PCM or ignition coil connector have poor connection?	Yes	Repair or replace connector.
		No	Go to next step.
4	Is ignition coil winding resistance okay?	Yes	Go to next step.
		No	Replace ignition coil.
5	Are following parts okay? • CKP sensor and crankshaft pulley (also, check for a gap). **Specification** **0.5—1.5 mm {0.020—0.059 in}** • PCM terminal 21/22 voltage **Specification** **Approx. 1.5 V**	Yes	Check for open or short in wiring harness and connectors of CKP sensor.
		No	Repair or replace.

Fuel Cut Control Inspection

1. Warm up the engine to normal operating temperature and let it idle.
2. Increase the engine speed to 3,000 rpm, then suddenly release the throttle.
3. Check if there is no operational sound from each fuel injector with a screwdriver or a sound scope when the engine speed is above approx. 2,500 rpm on deceleration.

Cooling Fan Control System Inspection

Cooling fan operation

Engine condition	Cooling fan relay	Condenser fan relay
Engine coolant temperature below 97 °C {207 °F}	OFF	OFF
Engine coolant temperature above 100 °C {212 °F}	ON	OFF
Engine coolant temperature above 109 °C {228 °F}	ON	ON
Air conditioning switch ON	ON	ON
Engine coolant temperature sensor malfunction	ON	ON

Cooling fan

1. Verify that the engine is cold.
2. Turn the ignition switch to ON.
3. Verify that the cooling fan is not operating.
4. If the cooling fan is operating:
   (1) Connect the **SSTs** (NGS tester) to the DLC.

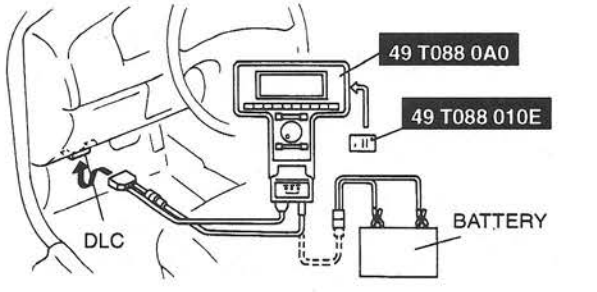

W6U101WJ0

   (2) Select the "ACTIVE COMMAND" then "OUTPUT TEST MODE" function on the NGS tester display.
   (3) Select the "ALL OFF" and verify the cooling fan signal is OFF.
   (4) If the cooling fan control signal is ON check:
- Cooling fan relay stuck in closed position.
- Short to ground circuit between cooling fan relay and PCM.

- Short to power in circuit between cooling fan relay.
- DTCs for ECT sensor.
- P0117, P0118, P0125, P1116, P1117.

(5) If the cooling fan is OFF, check the following.
- Short to ground circuit between A/C switch and PCM.
- DTC for ECT sensor.
- P0117, P0118, P0125, P1116, P1117.

5. Start the engine.
6. Verify that the cooling fan is operating when engine is hot.
7. If the cooling fan does not operate, do as follows.
   (1) Connect the **SSTs** (NGS tester) to the DLC.
   (2) Select "Active Command" mode.
   (3) Select "Output Test Mode".
   (4) Select "ALL ON" mode.
   (5) Press "Start".
   (6) If the cooling fan operates, check the ECT sensor DTCs.
   - P0117, P0118, P0125, P1116, P1117.

   (7) If the cooling fan does not operate, do as follows.
      ① Select "ALL ON". Operate cooling fan by selecting "Start", and verify that operational sound is heard from the cooling fan relay.
      ② If the operational sound is heard, check the wiring harnesses and connectors and cooling fan motor.
      ③ If the operational sound is heard, check the cooling fan relay and open circuit in wiring harnesses and connectors.
8. Turn the A/C switch and fan switch ON.
9. Verify that the cooling fan is operating.
10. If fan does not operate, check A/C system.

Condenser fan relay

1. Verify that the A/C switch and fan switch are off.
2. Start the engine and let it idle.
3. Verify that the condenser fan is not operating.
4. If the condenser fan is operating, check:
   - Condenser fan relay for stuck in closed position.
   - Short to power in circuit between condenser fan relay and condenser fan.
   - Short to ground in circuit between A/C pressure switches and PCM.
   - Short to ground circuit between condenser fan relay and PCM terminal 17.
5. Turn the A/C switch and fan switch ON.
6. Verify that the condenser fan is operating and the operating sound of A/C compressor magnetic clutch is heard.
7. Turn the A/C switch and fan switch off.
8. If the condenser fan does not operate but the operating sound of A/C compressor magnetic clutch is heard, check as follows:
   - Open circuit between ignition switch and condenser fan relay.
   - Open circuit between battery and condenser fan relay.
   - Open circuit between condenser fan relay and PCM.
   - Open circuit between condenser fan relay and condenser fan motor or fan mortor ground.
   - Condenser fan relay stuck to open.
   - Condenser fan motor.
9. If both condenser fan and A/C compressor do not operate, check:
   - TP V PID. (Refer to 01–40B THROTTLE POSITION SENSOR INSPECTION [KL])
   - A/C system.

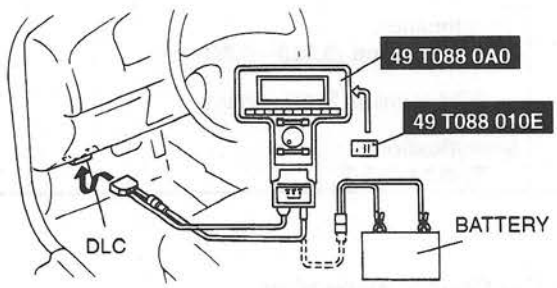

W6U101WJ1

01–01C TROUBLESHOOTING [CRUISE CONTROL SYSTEM]

FOREWORD **01–01C–1**
CRUISE CONTROL SYSTEM SYMPTOM TROUBLESHOOTING **01–01C–1**
Diagnostic Index **01–01C–1**
Symptom Troubleshooting **01–01C–2**

FOREWORD

W6U101W4A

- Refer to 00–00 GENERAL INFORMATION and thoroughly read and understand the basic flow of troubleshooting to properly perform the procedures.

CRUISE CONTROL SYSTEM SYMPTOM TROUBLESHOOTING

W6U101W4B

Diagnostic Index

- For the steps which have an asterisk (*), inspect the connection of the connector with the terminal and inspect for any damage. If the connection is poor, disconnect then reconnect, or repair or replace the appropriate parts if necessary.
- The troubleshooting hints in the symptom troubleshooting chart describe the possible cause with step numbers. Use the troubleshooting hint as reference of further diagnostic procedures.

No.	Malfunction symptom
1	Set speed is not kept even when SET switch is depressed.
2	While driving at a set speed, cruise control indicator light does not illuminate, or sometimes goes off.
3	Although set mode is set by pressing the SET switch, and the cruise control indicator light illuminates, the cruising speed is not stable.
4	While driving at the set speed, the speed can not be canceled although the cancel operation has been executed.
5	While driving at the set speed, the vehicle does not accelerate even when ACCEL switch is depressed. It does not return to the previous set speed even while driving faster than 40 km/h {25 MPH} and RESUME switch is depressed after the set speed is canceled.
6	While driving at the set speed, the set speed is canceled although the cancel operation has not been executed.

Symptom Troubleshooting

1	Set speed is not kept even when SET switch is depressed.

TROUBLESHOOTING HINTS

Improper operation by customer
- Steps 1, and 3 to 5

Malfunction of clock spring and related parts
- Step 6

Malfunction in DTC related areas which are detected by PCM self diagnosis inspection
- Step 7

Malfunction in power supply circuit for cruise actuator
- STOP 15 A fuse or TURN 10 A fuse malfunction

Malfunction of actuator cables and related parts
- Actuator cable malfunction

Malfunction of brake pedal and related parts
- Step 12

Malfunction of clutch pedal and related parts on MTX vehicles
- Step 13

Malfunction of clutch switch on/off signal and related parts
- Malfunction in wiring harness between cruise actuator and clutch switch
- Clutch switch malfunction

Malfunction of selector lever position signal and related parts
- Step 16

Malfunction of cruise actuator ignition 1 and GND signals and related parts
- Malfunction in wiring harness between TURN 10 A fuse and cruise actuator
- Malfunction in wiring harness between instrument cluster and ground
- Malfunction in wiring harness between cruise actuator and instrument cluster
- Instrument cluster's base print plate malfunction

Malfunction of cruise control position signal switch and related parts
- Malfunction in wiring harness between cruise actuator and clock spring
- Short cord on clock spring malfunction : connected to cruise actuator or cruise control switch
- Cruise control switch malfunction
- Malfunction in wiring harness between TURN 10 A fuse and clock spring
- Short cord on clock spring malfunction : connected to TURN 10 A fuse or cruise control switch
- Cruise control switch malfunction

Malfunction of Brake on/off signal and related parts
- Malfunction in wiring harness between brake switch and cruise actuator
- Malfunction in wiring harness between STOP 15 A fuse and brake switch
- Malfunction in wiring harness between vehicle speedometer sensor and ground
- Malfunction in wiring harness between cruise actuator and vehicle speedometer sensor
- Speed sensor malfunction
- Malfunction in wiring harness between STOP 15 A fuse and brake switch
- Malfunction in wiring harness between brake switch and cruise actuator
- Malfunction in wiring harness between STOP 15 A fuse and brake switch
- Brake switch malfunction

Malfunction of vehicle speedometer sensor on signal and related parts
- Cruise actuator malfunction

STEP	INSPECTION		ACTION
1	Did customer press SET switch within the range of 40 km/h {25 MPH} to 160 km/h {100 MPH}?	Yes	Go to next step.
		No	The vehicle is operating normally. Explain to the customer that the control cannot be set when the vehicle speed is not within 40 km/h {25 MPH} to 160 km/h {100 MPH}.
2	Is it an ATX vehicle?	Yes	Go to step 4.
		No	Go to next step.
3	Did a customer step on the clutch pedal when depressing SET switch?	Yes	The vehicle is operating normally. Explain to the customer that cruise control cannot be set as the system will be canceled while stepping on the clutch pedal.
		No	Go to next step.
4	Did a customer step on the brake pedal when depressing SET switch?	Yes	The vehicle is operating normally. Explain to the customer that cruise control cannot be set as the system will be canceled while stepping on the brake pedal.
		No	Go to next step.
5	Was the selector lever at N range when depressing SET switch?	Yes	The vehicle is operating normally. Explain to the customer that cruise control cannot be set as the system will be canceled while the selector lever is at N range.
		No	Go to next step.

STEP	INSPECTION		ACTION
6	Inspect horn. Does it sound?	Yes	Go to next step.
		No	Inspect connection of clock spring connector (4-pin). If no concern is found, go to next step. If poor connections are found, make sure they are securely connected and then go to step 37.
7	Perform engine On-Board Diagnosis. Are following DTCs indicated? ☞ 01–01A ENGINE ON-BOARD DIAGNOSIS (FS) ☞ 01–01B ENGINE ON-BOARD DIAGNOSIS (KL) • P0500, P1500, P1501 • (KL) P0703 • (FS) P1703	Yes	Repair damaged area by following inspection by applicable DTC of PCM.
		No	Go to next step.
8	Inspect STOP 15 A fuse and TURN 10 A fuse. Are they okay? 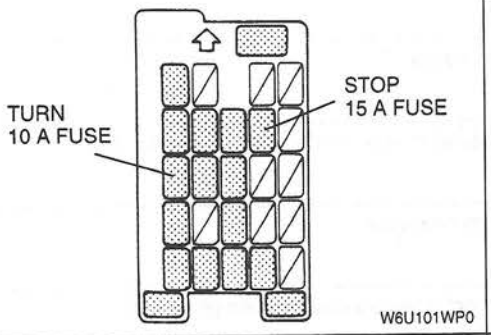 	Yes	Go to next step.
		No	Replace fuse, then go to step 37. If fuse melts immediately after replacement, then go to step 18, 25, 28, and 31.
9	Inspect connection of actuator cable to accelerator pedal and cruise actuator link. Are they securely and properly connected?	Yes	Go to next step.
		No	Connect actuator cable securely and properly, then go to step 37.
10	Remove actuator cable on cruise actuator side. Hold the end of cruise actuator cable by hand. Inspect actuator cable operation by depressing and releasing the accelerator pedal. Is it okay?	Yes	Reinstall actuator cable. Go to next step.
		No	Replace actuator cable, then go to step 37.
11	Inspect actuator cable play. ☞ 01–20 ACTUATOR CABLE ADJUSTMENT Is it okay?	Yes	Go to next step.
		No	Adjust the play, then go to step 37.
12	Inspect brake pedal height and free play on vehicle. ☞ 04–11 BRAKE PEDAL INSPECTION Is it okay?	Yes	For ATX vehicle, go to step 16. For MTX vehicle, go to next step.
		No	Adjust brake pedal height or brake pedal play, then go to step 37.
13	Inspect clutch pedal height and free play on vehicle. ☞ 05–10 CLUTCH PEDAL ADJUSTMENT Is it okay?	Yes	Go to next step.
		No	Adjust clutch pedal height or clutch pedal play, then go to step 37.

STEP	INSPECTION		ACTION
14*	Disconnect cruise actuator connector and clutch switch connector. Inspect continuity between terminal I (clutch switch on/off signal) of cruise actuator connector of the wiring harness and ground. Is there continuity? 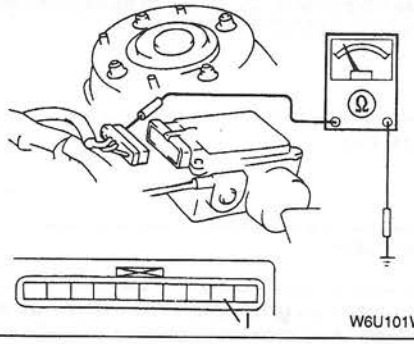 W6U101WP1	Yes	Repair wiring harness between cruise actuator and clutch switch, then go to step 37.
		No	Go to next step.
15	Inspect clutch switch. ☞ 01–40A CLUTCH SWITCH INSPECTION (FS) ☞ 01–40B CLUTCH SWITCH INSPECTION (KL) Is it okay?	Yes	Go to step 17.
		No	Replace clutch switch, then go to step 37.
16	Inspect transaxle range switch. ☞ 05–17A ELECTRICAL SYSTEM COMPONENT (FS) ☞ 05–17B TRANSAXLE RANGE SWITCH INSPECTION (KL) Is it okay?	Yes	Go to next step.
		No	Inspect possible cause, then go to step 37.
17*	Disconnect cruise actuator connector. Turn ignition switch to ON. Measure voltage at terminal D (ignition on signal) of cruise actuator connector and terminal A of cruise actuator connector. Is voltage **12 V**? 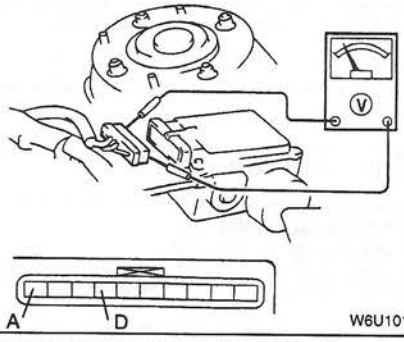 A D W6U101WP2	Yes	Go to step 21.
		No	Go to next step.
18	Measure voltage at terminal D (ignition on signal) of cruise actuator connector of wiring harness. Is voltage **12 V**? 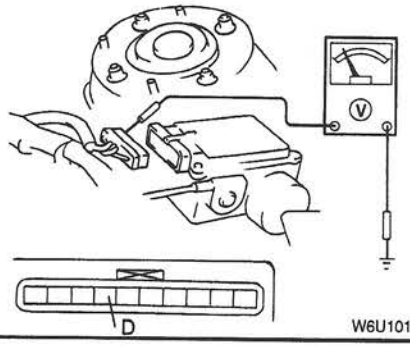 D W6U101WP3	Yes	Go to next step.
		No	Repair wiring harness from TURN 10 A fuse to cruise actuator, then go to step 37.

STEP	INSPECTION		ACTION
19*	Disconnect instrument cluster connector (14-pin). Inspect continuity between terminal 2B of instrument cluster (14-pin) connector of the wiring harness and ground. Is there continuity? 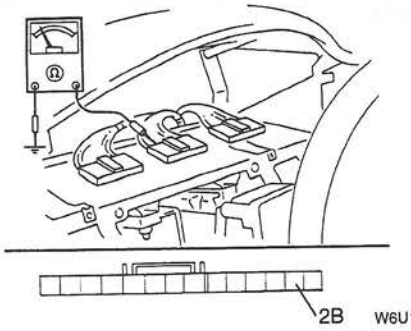 W6U101WP4	Yes	Go to next step.
		No	Repair wiring harness from instrument cluster to ground, then go to step 37.
20	Remove instrument cluster. Inspect continuity between terminal 2B of instrument cluster (14-pin) and terminal 2C of instrument cluster (14-pin). Is there continuity? 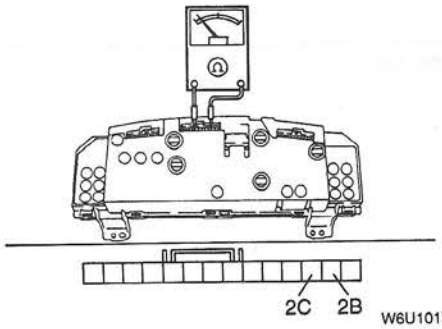 W6U101WP5	Yes	Repair wiring harness from cruise actuator to instrument cluster, then go to step 37.
		No	Replace print plate No.1 then go to step 37.
21*	Measure voltage at the following of cruise actuator. • Terminal E (cruise control switch position signal) • Terminal F (cruise control switch position signal) ☞ 01–20 CRUISE CONTROL SWITCH INSPECTION Is voltage correct? 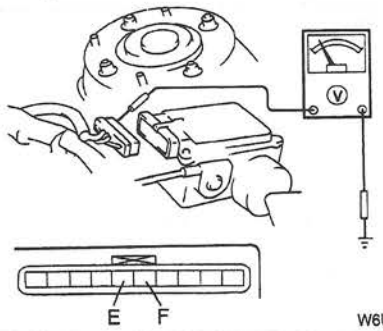 W6U101WP6	Yes	Go to step 28.
		No	Go to next step.

STEP	INSPECTION		ACTION
22	Hold SET/COAST switch to on position. Measure resistance between terminal E (cruise control switch position signal) and F (cruise control switch position signal) of cruise actuator. Is resistance at **228 to 252** Ω? 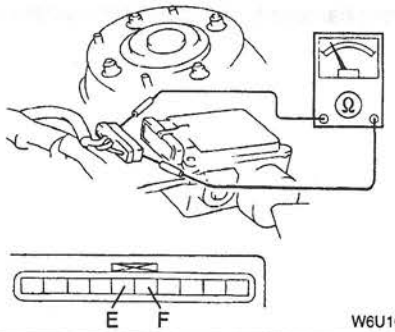 W6U101WP7	Yes	Go to step 25.
		No	Go to next step.
23*	Disconnect clock spring connectors (4-pins). Hold SET/COAST switch to on position. Measure resistance between terminal A (cruise control switch position signal) and B (cruise control switch position signal) of clock spring. Is resistance at **228 to 252** Ω? 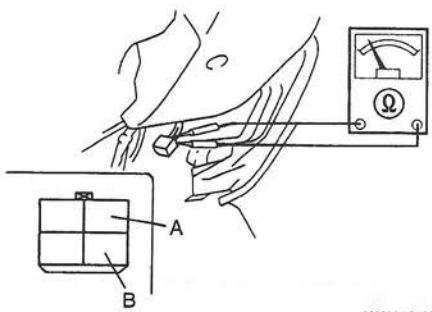 W6U101WP8	Yes	Repair wiring harness from cruise actuator to clock spring, then go to step 37.
		No	Go to next step.
24	Inspect cruise control switch. ☞ 01–20 CRUISE CONTROL SWITCH INSPECTION Is it okay?	Yes	Repair short cord on clock spring: connected to cruise actuator or cruise control switch, then go to step 37.
		No	Replace cruise control switch, then go to step 37.
25*	Measure voltage at terminal C (ignition 1 signal) of clock spring (4-pin) connector. Is voltage **12 V**? 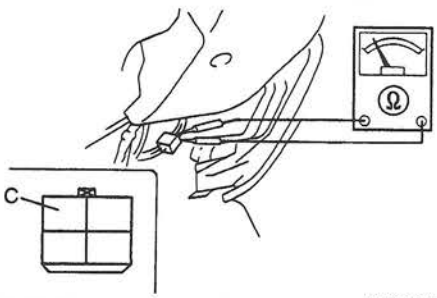 W6U101WP9	Yes	Go to step 28.
		No	Go to next step.

STEP	INSPECTION		ACTION
26	Disconnect clock spring connector (4-pin). Measure voltage at terminal C (ignition 1 signal) of clock spring (4-pin) connector of wiring harness. Is voltage **12 V**? 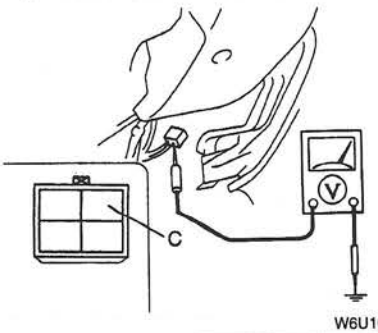 W6U101WPA	Yes	Go to next step.
		No	Repair wiring harness from TURN 10 A fuse to clock spring, then go to step 37.
27	Inspect cruise control switch. ☞ 01–20 CRUISE CONTROL SWITCH INSPECTION Is it okay?	Yes	Repair short cord on clock spring connected to TURN 10 A fuse or cruise control switch, then go to step 37.
		No	Replace cruise control switch, then go to step 37.
28*	Measure voltage at terminal B (brake on/off signal) and G (brake on/off signal) of cruise actuator. ☞ 01–20 CRUISE ACTUATOR INSPECTION Is voltage correct? 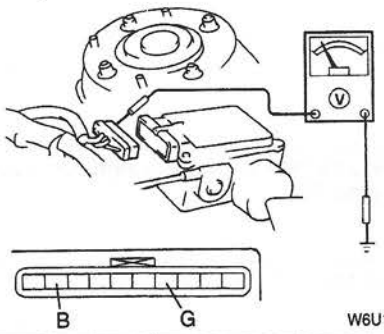 W6U101WPB	Yes	Go to step 34.
		No	Incorrect voltage at B terminals: Go to next step. Incorrect voltage at G terminals: Go to step 31.
29*	Measure voltage at terminal B (brake on/off signal) of brake switch connector of wiring harness. Is voltage **12 V**? 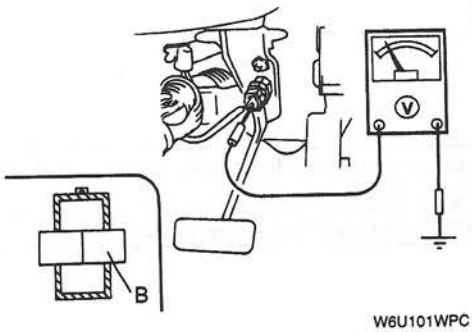 W6U101WPC	Yes	Go to next step.
		No	Repair wiring harness from STOP 15 A fuse to brake switch, then go to step 37.

STEP	INSPECTION		ACTION
30*	Measure voltage at terminal D (brake on/off signal) of brake switch connector of wiring harness. Is voltage **12 V**? 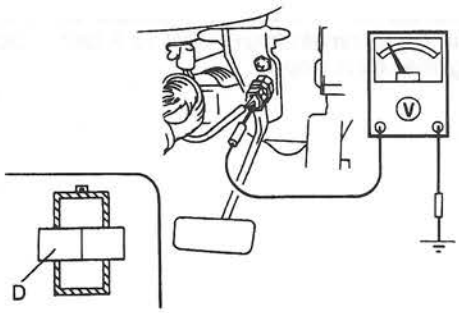 W6U101WPF	Yes	Repair wiring harness from brake switch to cruise actuator, then go to step 37.
		No	Inspect brake switch, then go to step 37.
31*	Measure voltage at terminal A (brake on/off signal) of brake switch connector of wiring harness. Is voltage **12 V**? 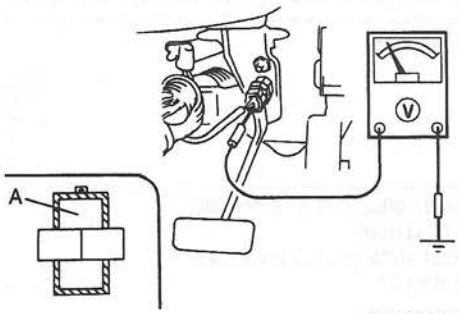 W6U101WPG	Yes	Go to next step.
		No	Repair wiring harness from STOP 15 A fuse to brake switch, then go to step 37.
32*	Measure voltage at terminal C (brake on/off signal) of brake switch connector of wiring harness while brake pedal is depressed. Is voltage **12 V**? 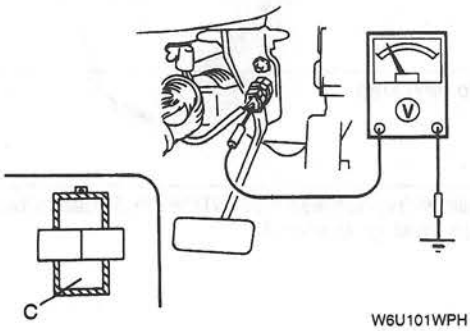 W6U101WPH	Yes	Repair wiring harness from brake switch to cruise actuator, then go to step 37.
		No	Go to next step.
33	Inspect brake switch. ☞ 04–11 BRAKE SWITCH INSPECTION Is it okay?	Yes	Repair wiring harness from brake switch to cruise actuator, then go to step 37.
		No	Replace brake switch, then go to step 37.

STEP	INSPECTION		ACTION
34*	Measure voltage at terminal A (vehicle speed signal) and H (vehicle speed signal) of cruise actuator connector of wiring harness. ☞ 01–20 CRUISE ACTUATOR INSPECTION Is voltage correct? 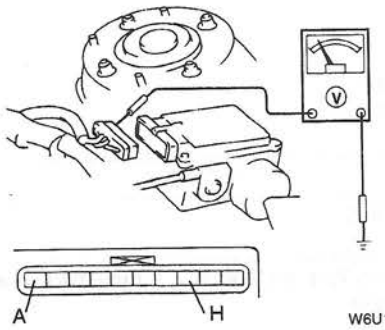 	Yes	Replace cruise actuator, then go to step 37.
		No	Go to next step.
35*	Disconnect vehicle speedometer sensor connector. Inspect continuity between terminal A (vehicle speed signal) of vehicle speedometer sensor connector of wiring harness and ground. Is there continuity? 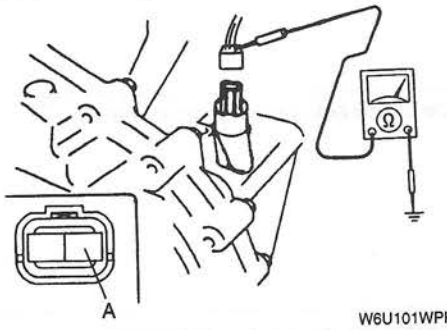 	Yes	Go to next step.
		No	Repair wiring harness from vehicle speedometer sensor to ground, then go to step 37.
36	Inspect vehicle speedometer sensor. ☞ 05–15 VEHICLE SPEEDOMETER SENSOR INSPECTION (MTX) ☞ 05–17A VEHICLE SPEEDOMETER SENSOR INSPECTION (ATX) Is it okay?	Yes	Repair wiring harness from cruise actuator to vehicle speedometer sensor, then go to next step.
		No	Replace vehicle speedometer sensor, then go to next step.
37	Does vehicle go at set speed when SET switch is pressed?	Yes	Troubleshooting completed.
		No	Reconfirm the symptoms of the trouble. If the trouble persists, go back to step 1.

2	While driving at a set speed, cruise control indicator light does not illuminate, or sometimes goes off.

TROUBLESHOOTING HINTS

Malfunction in areas related to power for cruise control indicator light
- METER 10 A fuse malfunction

Malfunction of cruise actuator and related parts
- Cruise actuator malfunction

Malfunction of cruise control indicator light and related parts
- Step 3

Malfunction of cruise control indicator light output signal and related parts
- Malfunction in wiring harness between METER 10 A fuse and cruise actuator
- Malfunction in wiring harness between instrument cluster and cruise actuator
- Combination meter base malfunction

STEP	INSPECTION		ACTION
1	Inspect METER 10 A fuse. Is it okay? 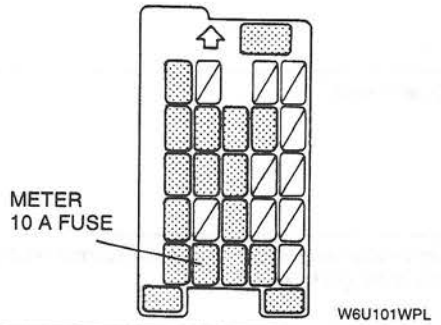 	Yes	Go to next step.
		No	Replace fuse, then go to step 7. If fuse melts immediately, go to next step.
2*	Turn ignition switch to ON. Disconnect cruise actuator connector. Measure voltage at terminal J (cruise control indicator light output signal) of cruise actuator connector of wiring harness. ☞ 01–20 CRUISE ACTUATOR INSPECTION Is voltage correct? 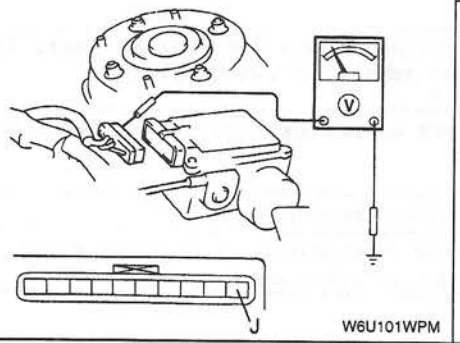 	Yes	Replace cruise actuator, then go to step 7.
		No	Go to next step.
3	Verify that cruise control indicator light is securely installed to instrument cluster and the bulb is working properly. Are they okay?	Yes	Go to next step.
		No	Securely install it or replace the bulb, then go to step 7.

STEP	INSPECTION		ACTION
4*	Measure voltage at terminal 3N (cruise control indicator light output signal) of instrument cluster (14-pin) connector of wiring harness. Is voltage **12 V**? 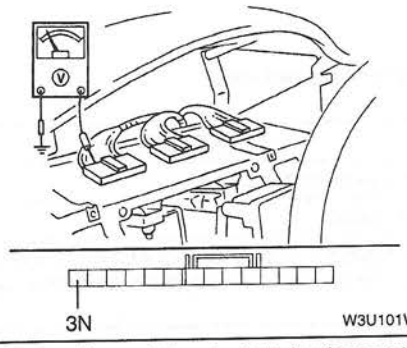 	Yes	Go to next step.
		No	Repair wiring harness from METER 10 A fuse to instrument cluster, then go to step 7.
5*	Measure voltage at terminal 1J (cruise control indicator light output signla) of instrument cluster (12-pin) connector of wiring harness. Is voltage **12 V**? 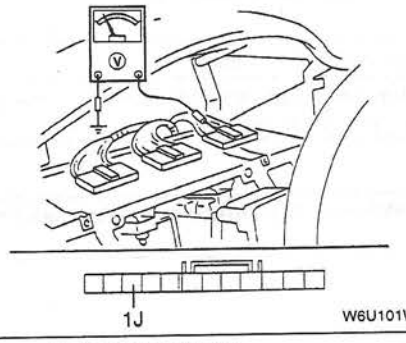 	Yes	Repair wiring harness from instrument cluster to cruise actuator, then go to step 7.
		No	Go to next step.
6	Remove instrument cluster. Inspect continuity between terminal 1J of instrument cluster connector of wiring harness and ground. Is there continuity? 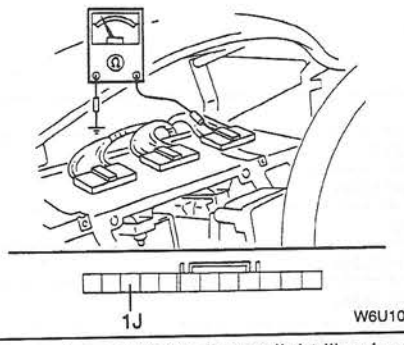 	Yes	Repair wiring harness from instrument cluster to cruise actuator, then go to next step.
		No	Replace print plate No.1, then go to next step.
7	Does cruise control indicator light illuminate while driving at set speed?	Yes	Troubleshooting completed.
		No	Reconfirm the symptoms of the trouble. If the trouble persists, go back to step 1.

3	**Although set mode is set by pressing the SET switch, and the cruise control indicator light illuminates, the cruising speed is not stable.**

TROUBLESHOOTING HINTS
System is misunderstood by customer
- Step 1

Malfunction of fuel and emission control system and related parts
- Step 2

Malfunction of throttle cable, actuator cable, or vehicle speedometer sensor and related parts
- Step 3

STEP	INSPECTION		ACTION
1	Does trouble occur on a slope or on other conditions beside level roads?	Yes	System operation is normal.
		No	Go to next step.
2	Does vehicle speed vary during normal driving when no speed is set?	Yes	Perform troubleshooting for fuel and emission control system. The cruise control system is not the cause of the trouble.
		No	Go to next step.
3	Inspect the free-play of the throttle cable and cruise actuator cable. ☞ 01–20 ACTUATOR CABLE ADJUSTMENT Are they okay?	Yes	Inspect vehicle speedometer sensor, then go to next step.
		No	Adjust play, then go to next step.
4	Does vehicle operate normally?	Yes	Troubleshooting completed.
		No	Reconfirm the symptoms of the trouble. If the trouble persists, go back to step 1.

4	**While driving at the set speed, the speed can not be canceled although the cancel operation has been executed.**

TROUBLESHOOTING HINTS
Malfunction of clutch switch on/off signal and related parts
- Cruise actuator malfunction
- Malfunction in wiring harness between cruise actuator and clutch switch
- Clutch switch malfunction
- Malfunction in wiring harness between clutch switch and ground

Malfunction of selector lever position signal and related parts
- Cruise actuator malfunction
- Malfunction in wiring harness between cruise actuator and clutch switch

Malfunction of cruise control main switch, cruise actuator, and related parts
- Cruise actuator malfunction
- Cruise control main switch malfunction

STEP	INSPECTION		ACTION
1	Is it an ATX vehicle?	Yes	Go to step 7.
		No	Go to next step.
2	Does it cancel when clutch pedal is depressed?	Yes	Go to step 11.
		No	Go to next step.
3	Inspect clutch pedal height and free-play on vehicle. ☞ 05–10 CLUTCH PEDAL ADJUSTMENT Is it okay?	Yes	Go to next step.
		No	Adjust clutch pedal height or clutch pedal play, then go to step 13.

STEP	INSPECTION		ACTION
4*	Disconnect cruise actuator. Inspect continuity between terminal I (clutch switch on/off signal) of cruise actuator connector of wiring harness and ground, while clutch pedal is depressed. Is there continuity? 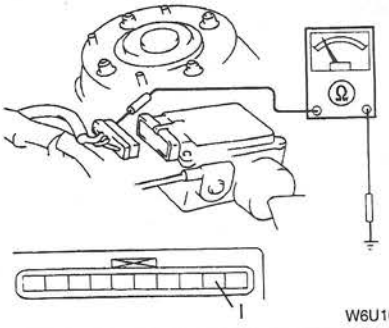 W6U101WPR	Yes	Replace cruise actuator, then go to step 13.
		No	Go to next step.
5*	Inspect continuity between terminal E (clutch switch on/off signal) of clutch switch connector of wiring harness and ground, while clutch pedal is depressed. Is there continuity? 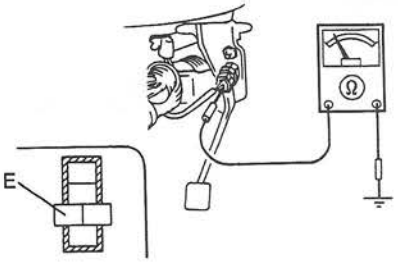 W6U101WPS	Yes	Repair wiring harness from cruise actuator to clutch switch, then go to step 13.
		No	Go to next step.
6*	Disconnect clutch switch connector. Inspect continuity between terminal C (clutch switch on/off signal) of clutch switch connector of wiring harness and ground. Is there continuity? 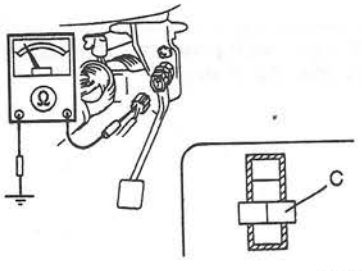 W6U101WPT	Yes	Replace clutch switch, then go to step 13.
		No	Repairing wiring harness from clutch switch to ground, then go to step 13.
7	Does it cancel when selector lever is shifted to N range?	Yes	Go to step 11.
		No	Go to next step.

STEP	INSPECTION		ACTION
8*	Disconnect cruise actuator connector. Set selector lever to N. Inspect continuity between terminal I (selector lever position signal) of cruise actuator connector of wiring harness and ground. Is there continuity? 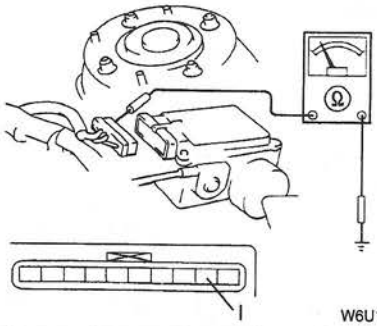 W6U101WPU	Yes	Replace cruise actuator, then go to step 13.
		No	Go to next step.
9*	Inspect continuity between the following of transaxle range switch connector of wiring harness and ground. • KL: H terminal • FS: 9 terminal Is there continuity? KL 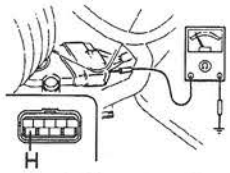 FS 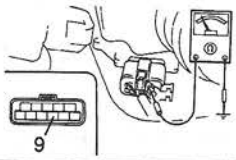 W6U101WPV	Yes	Repair wiring harness from cruise actuator to transaxle range switch, then go to step 13.
		No	Go to next step.
10*	Disconnect transaxle range switch. Inspect continuity between the following of transaxle range switch connector of wiring harness and ground. • KL: B terminal • FS: 4 terminal Is there continuity? KL 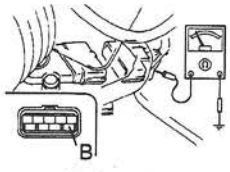 FS 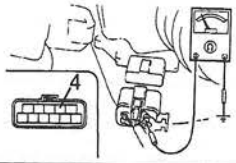 W6U101WPW	Yes	Inspect transaxle range switch, then go to step 13.
		No	Inspect starter and wiring harness from starter to transaxle range switch, then go to step 13.
11	Press cruise control main switch. Does it cancel?	Yes	The system is normal.
		No	Go to next step.
12	Inspect cruise control main switch. ☞ 01–20 CRUISE CONTROL SWITCH INSPECTION Is it okay?	Yes	Replace cruise actuator, then go to next step.
		No	Replace cruise control main switch, then go to next step.
13	Cancel set speed while driving at set speed. Does it work?	Yes	Troubleshooting completed.
		No	Reconfirm the symptoms. If the trouble persists, go back to step 1.

5	**While driving at the set speed, the vehicle does not accelerate even when ACCEL switch is depressed. It does not return to the previous set speed, even while driving faster than 40 km/h {25 MPH} and RESUME switch is depressed after the set speed is canceled.**

TROUBLESHOOTING HINTS
Customer misunderstood the system function
- Step 2

Malfunction of cruise control switch, cruise actuator and related parts
- Cruise actuator malfunction
- Cruise control switch malfunction

STEP	INSPECTION		ACTION
1	Does RESUME only operate?	Yes	Go to next step. ACCEL only does not operate.
		No	Go to step 3. Both RESUME and ACCEL do not operate.
2	Did customer press RESUME/ACCEL switch and SET/COAST switch at the same time?	Yes	System is normal. Explain the customer the following. COAST has higher priority than others when SET/COAST switches is pressed earlier or at the same time. Also, the system will be canceled when RESUME/ACCEL switch is pressed earlier.
		No	Reconfirm the symptoms of trouble.
3	Inspect cruise control switch. ☞ 01–20 CRUISE CONTROL SWITCH INSPECTION Is it okay?	Yes	Replace cruise actuator, then go to next step.
		No	Replace cruise control switch, then go to next step.
4	Do RESUME and ACCEL operate normally?	Yes	Troubleshooting completed.
		No	Reconfirm the symptoms of trouble. If the trouble persists, go back to step 1.

6	**While driving at the set speed, the set speed is canceled although the cancel operation has not been executed.**

TROUBLESHOOTING HINTS
Customer misunderstood the system function
- Step 1 to 3

Malfunction of cruise actuator and related parts
- Cruise actuator malfunction

STEP	INSPECTION		ACTION
1	Did customer set the selector lever to N range while driving the set speed?	Yes	System is normal. Explain to the customer that system will cancel the set speed when selector lever is on N range.
		No	Go to next step.
2	Did customer drive 15 km/h {10 MPH} slower than set speed while driving on a slope?	Yes	System is normal. Explain to the customer that system will cancel the set speed when vehicle is driven 15 km/h {10 MPH} slower than set speed.
		No	Go to next step.
3	Did customer drive over a bump or did vehicle incur a sudden impact such as from an accident?	Yes	System is normal. Explain to the customer that system will cancel the set speed when the vehicle incurs a sudden impact which is greater than a certain G force and the sudden speed change is input to the cruise actuator.
		No	Go to next step
4	Inspect that vehicle drives within the range of 40 km/h {25 MPH} to 160 km/h {100 MPH} every time when SET switch is depressed. Is it okay?	Yes	Replace cruise actuator, then go to next step.
		No	Perform the malfunction symptom No.1.
5	Inspect cruise control system operation. Is it okay?	Yes	Troubleshooting completed.
		No	Reconfirm the symptoms. If the trouble persists, go back to step 1.

01–10A MECHANICAL [FS]

DRIVE BELT INSPECTION [FS] **01–10A–1**
Drive Belt Deflection Check **01–10A–1**
Drive Belt Tension Check **01–10A–1**
DRIVE BELT ADJUSTMENT [FS] **01–10A–2**
VALVE CLEARANCE INSPECTION [FS] **01–10A–2**
VALVE CLEARANCE ADJUSTMENT [FS] **01–10A–3**
COMPRESSION INSPECTION [FS] **01–10A–4**
TIMING BELT REMOVAL/INSTALLATION [FS] **01–10A–5**
Crankshaft Pulley Removal Note **01–10A–6**
Cylinder Head Cover Removal Note .. **01–10A–6**
No.3 Engine Mount Rubber Removal Note **01–10A–6**
Timing Belt Removal Note **01–10A–6**
Tensioner, Tensioner Spring Installation Note **01–10A–6**
Timing Belt Installation Note **01–10A–7**
Cylinder Head Cover Installation Note **01–10A–8**
Crankshaft Pulley Installation Note ... **01–10A–8**
CYLINDER HEAD GASKET REPLACEMENT [FS] **01–10A–8**
Camshaft Pulley Removal Note **01–10A–9**
Camshaft Removal Note **01–10A–9**
Cylinder Head Removal Note **01–10A–10**
Cylinder Head Installation Note **01–10A–10**
Camshaft Installation Note **01–10A–10**
Camshaft Pulley Installation Note **01–10A–11**
FRONT OIL SEAL REPLACEMENT [FS] **01–10A–12**
Front Oil Seal Removal Note **01–10A–12**
Front Oil Seal Installation Note **01–10A–12**
REAR OIL SEAL REPLACEMENT [FS] **01–10A–12**
Rear Oil Seal Removal Note **01–10A–13**
Rear Oil Seal Installation Note **01–10A–13**
ENGINE REMOVAL/INSTALLATION [FS] **01–10A–13**
No.4 Engine Mount Bracket Installation Note **01–10A–14**
ENGINE DISASSEMBLY/ASSEMBLY [FS] **01–10A–15**
ENGINE TUNE-UP [FS] **01–10A–16**
Engine Tune-up Preparation **01–10A–16**
Ignition Timing Inspection **01–10A–16**
Idle Speed Adjustment **01–10A–16**
Idle-up Speed Inspection **01–10A–18**
Idle Mixture Inspection **01–10A–18**

DRIVE BELT INSPECTION [FS]

Drive Belt Deflection Check

1. Verify the drive belt deflection when the engine is cold, or at least 30 minutes after the engine has stopped. Apply moderate pressure **98 N {10 kgf, 22 lbf}** midway between the specified pulleys.

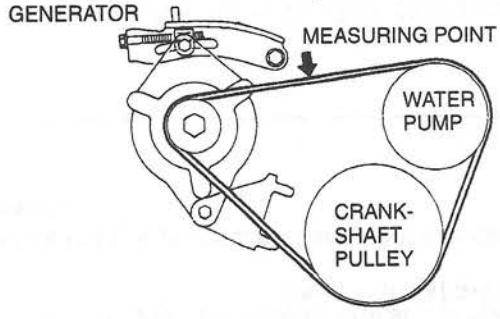

W6U110WA0

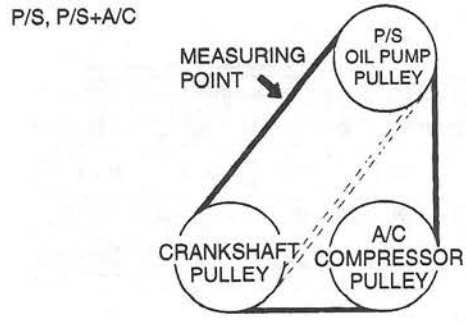

W6U110WA1

W6U110W01

Deflection

mm {in}

Drive belt	*New	Used	Limit
Generator	6.5—7.0 {0.26—0.27}	7.0—9.0 {0.28—0.35}	10.0 {0.39}
P/S	7.5—9.0 {0.30—0.35}	8.0—9.5 {0.31—0.37}	11.0 {0.43}
P/S+A/C	5.5—6.5 {0.22—0.25}	6.5—7.5 {0.26—0.29}	8.0 {0.31}

* : A belt that has been on a running engine for less than 5 minutes.

2. If the deflection is not within the specification, adjust it. (Refer to 01–10A DRIVE BELT ADJUSTMENT [FS].)

Drive Belt Tension Check

1. Belt tension can be verified in place of belt deflection. Verify the drive belt tension when the engine is cold, or at least 30 minutes after the engine has stopped. Using the **SST**, verify the belt tension between any two pulleys.

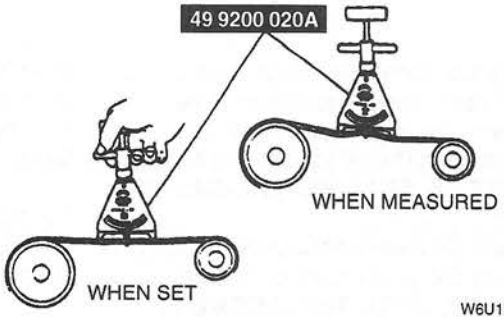

W6U110WA2

Tension

N {kgf, lbf}

Drive belt	*New	Used	Limit
Generator	736—833 {75—85, 165—187}	491—686 {50—70, 110—154}	392 {40, 88}
P/S	589—784 {60—80, 132—176}	491—686 {50—70, 110—154}	392 {40, 88}
P/S+A/C	687—882 {70—90, 154—198}	491—686 {50—70, 110—154}	441 {45, 99}

* : A belt that has been on a running engine for less than 5 minutes.

2. If the tension is not within the specification, adjust it. (Refer to 01–10A DRIVE BELT ADJUSTMENT [FS].)

DRIVE BELT ADJUSTMENT [FS]

1. Loosen mounting bolts A and nut B.
2. Adjust the belt deflection or tension by turning the adjusting bolt C. (Refer to 01–10A DRIVE BELT INSPECTION [FS].)
3. Tighten mounting bolts A and nut B.

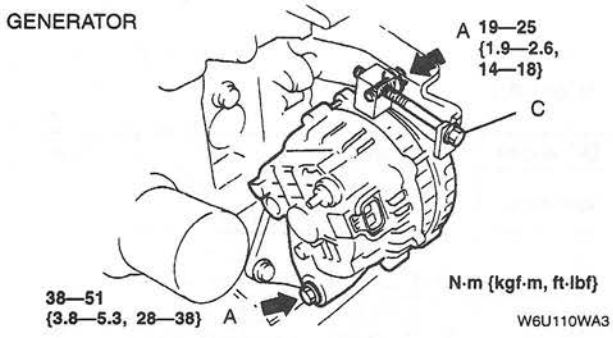

W6U110WA3

W6U110W02

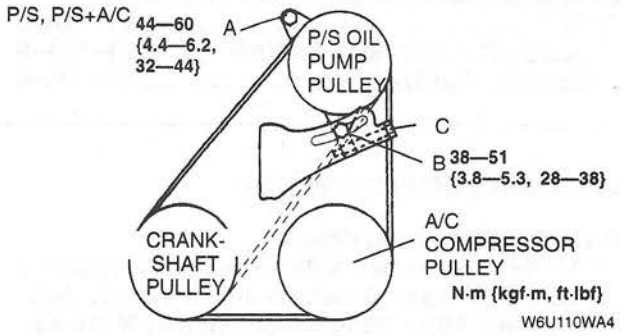

W6U110WA4

4. Verify the belt deflection or tension. (Refer to 01–10A DRIVE BELT INSPECTION [FS].)

VALVE CLEARANCE INSPECTION [FS]

1. Remove the cylinder head cover.
2. Verify that the engine is in cold condition.
3. Measure the valve clearance.
   (1) Turn the crankshaft clockwise so that the No.1 piston is at TDC of the compression stroke.

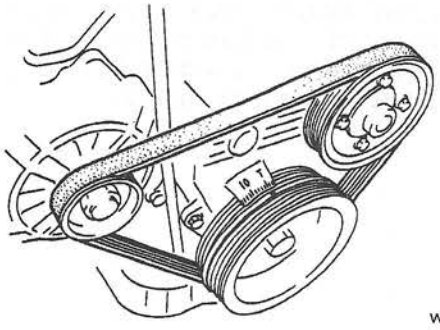

W6U110WC4

W6U110W03

(2) Measure the valve clearance at A in the figure.

Standard [Engine cold]
0.225—0.295 mm {0.0089—0.0116 in}

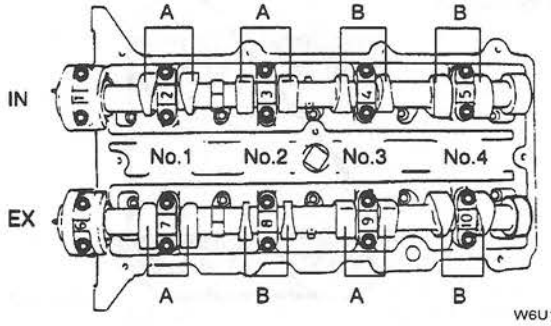

W6U110WA5

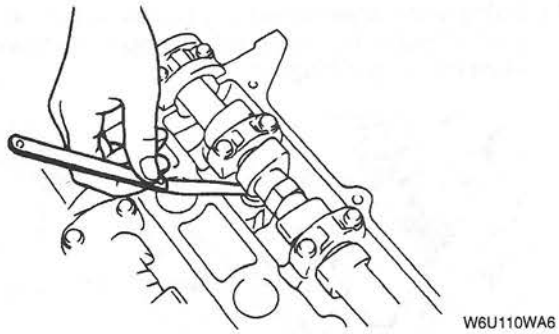
W6U110WA6

(3) If the valve clearance exceeds the standard, replace the adjustment shim. (Refer to 01–10A VALVE CLEARANCE ADJUSTMENT [FS].)

(4) Turn the crankshaft 360° clockwise so that the No.4 piston is at TDC of the compression stroke.
(5) Measure the valve clearance at B in the figure.

Standard [Engine cold]
0.225—0.295 mm {0.0089—0.0116 in}

(6) If the valve clearance exceeds the standard, replace the adjustment shim. (Refer to 01–10A VALVE CLEARANCE ADJUSTMENT [FS].)

4. Install the cylinder head cover. (Refer to 01–10A CYLINDER HEAD GASKET REPLACEMENT [FS], Cylinder Head Cover Installation Note.)

VALVE CLEARANCE ADJUSTMENT [FS]

Perform this same procedure for all camshafts requiring valve clearance adjustment.

1. Turn the crankshaft clockwise so that the cams on the camshaft requiring valve clearance adjustment are positioned straight up.
2. Remove the camshaft cap bolts as necessary. Remove only one pair of cap bolts at a time. Install the cap bolts before removing the next pair.
   - EX side No.1, 2, 3 cylinder adjustment shim removal: A
   - IN side No.1, 2, 3 cylinder adjustment shim removal: B
   - EX side No.2, 3, 4 cylinder adjustment shim removal: C
   - IN side No.2, 3, 4 cylinder adjustment shim removal: D

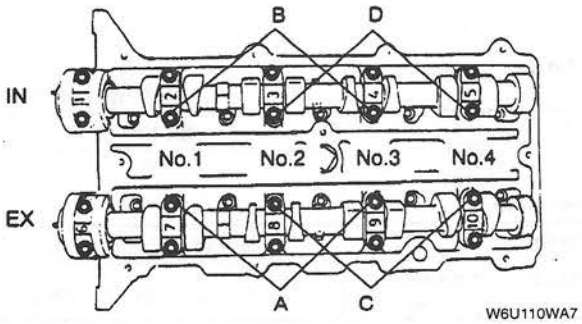

W6U110WA7

Note
- For EX side No.2, 3 cylinder adjustment shim removal, remove bolts either A or C.
- For IN side No.2, 3 cylinder adjustment shim removal, remove bolts either B or D.

3. Install the **SSTs** on the camshaft using the camshaft cap bolt holes.

Tightening torque
11.3—14.2 N·m
{115—145 kgf·cm, 100—125 in·lbf}

W6U110W04

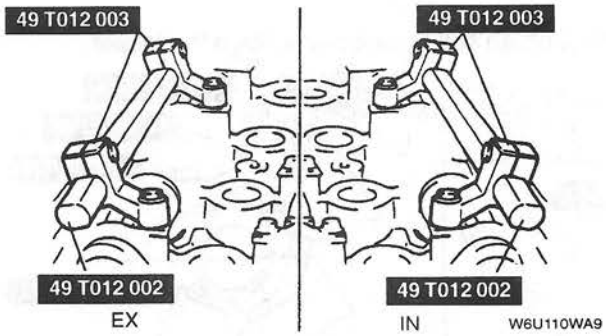

W6U110WA9

4. Align the marks on the **SSTs** (shaft and shaft clamp).
5. Tighten bolts A to secure the **SST** (shaft).

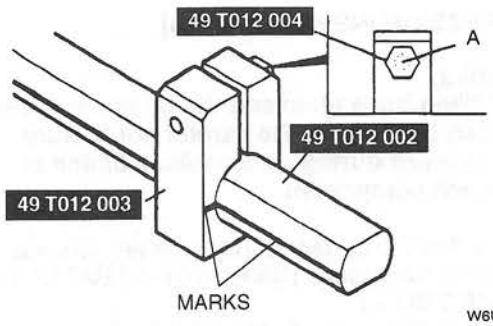

W6U110WAA

6. Face the **SST** (body) outside of the cylinder head, and mount it on the **SST** (shaft) at the point of the adjustment shim to be replaced.

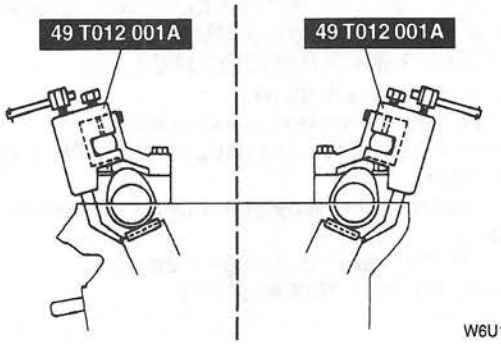

W6U110WAB

7. Face the notch of the tappet so that a small screwdriver can be inserted.

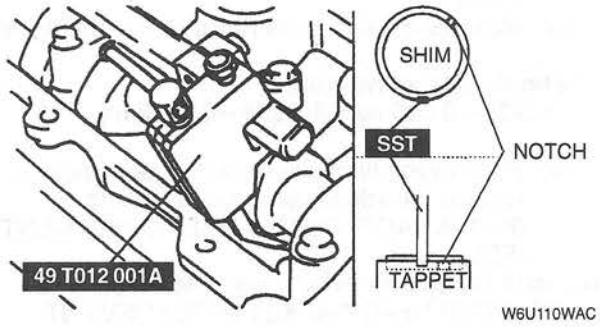

8. Set the **SST** on the tappet by its notch.
9. Tighten bolt B to secure the **SST** (body).

Caution
- **Cylinder head can be damaged when the tappet is pressed down.**

10. Tighten bolt C, and press down the tappet.

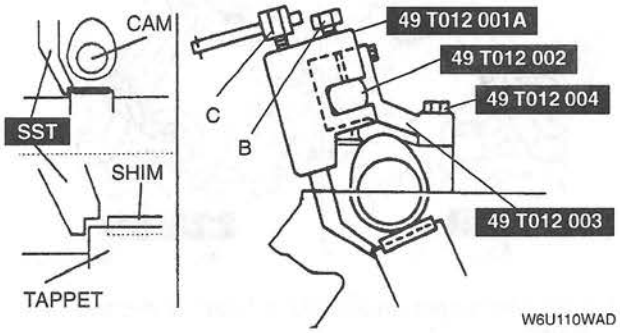

11. Using a fine screwdriver, pry up the adjustment shim through the notch on the tappet. Remove the shim by using a magnet.

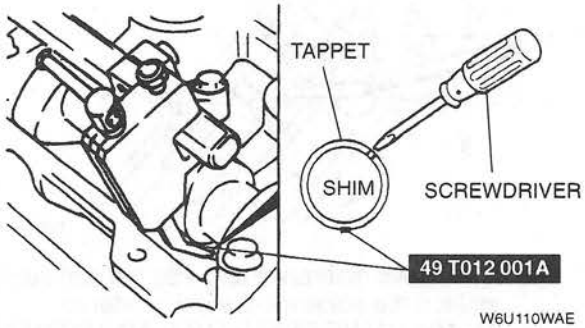

12. Select proper adjustment shim.

New adjustment shim
= Removed shim thickness + Measured valve clearance – Standard valve clearance (0.26 mm {0.010 in})

13. Push the selected shim into the tappet.
14. Loosen bolt C to allow the tappet to move up.
15. Loosen bolt B and remove the **SST** (body).
16. Remove the **SSTs** and tighten the camshaft cap bolts.

Tightening torque
11.3—14.2 N·m
{115—145 kgf·cm, 100—125 in·lbf}

17. Verify the valve clearance. (Refer to 01–10A VALVE CLEARANCE INSPECTION [FS].)

COMPRESSION INSPECTION [FS]

Warning
- **When the engine and the oil are hot, they can badly burn. Be careful not to burn yourself during removal/installation of each component.**

1. Verify that the battery is fully charged. Charge it again as necessary. (Refer to 01–17 BATTERY INSPECTION.)
2. Warm up the engine to the normal operating temperature.
3. Stop the engine and allow it to cool off for about 10 minutes.
4. Perform "Fuel Line Safety Procedures". Leave the fuel pump relay removed. (Refer to 01–14 BEFORE REPAIR PROCEDURE.)
5. Remove the spark plugs.
6. Disconnect the ignition coil connector.
7. Connect a compression gauge into the No.1 spark plug hole.
8. Fully depress the accelerator pedal and crank the engine.
9. Record the maximum gauge reading.
10. Inspect each cylinder as above.

W6U110W05

Compression

kPa {kgf/cm², psi} [rpm]

Item	Engine
	FS
Standard	1,177 {12.0, 171} [300]
Minimum	824 {8.4, 119} [300]
Maximum difference between cylinders	196 kPa {2.0 kgf/cm², 28 psi}

11. If the compression in one or more cylinders is low or the compression difference between cylinders exceeds the maximum, pour a small amount of clean engine oil into the cylinder and check the compression again.
    (1) If the compression increases, the piston, the piston rings, or cylinder wall may be worn and overhaul is required.
    (2) If the compression stays low, a valve may be stuck or improperly seated and overhaul is required.
    (3) If the compression in adjacent cylinders stays low, the cylinder head gasket may be damaged or the cylinder head is distorted and overhaul is required.
12. Disconnect the compression gauge.

13. Connect the ignition coil connector.
14. Install the fuel pump relay.
15. Install the spark plugs.

Tightening torque
15—22 N·m {1.5—2.3 kgf·m, 11—16 ft·lbf}

TIMING BELT REMOVAL/INSTALLATION [FS]

W6U110W06

1. Disconnect the negative battery cable.
2. Remove the camshaft position sensor and crankshaft position sensor.
3. Remove the spark plug.
4. Remove the P/S oil pump and bracket with the oil hose still connected.
5. Remove in the order indicated in the table.
6. Install in the reverse order of removal.
7. Verify the air gap. (Refer to 01–40A CRANKSHAFT POSITION SENSOR INSPECTION [FS].)
8. Start the engine and
   (1) Inspect for the pulleys and drive belt for runout and contact.
   (2) Verify the ignition timing. (Refer to 01–10A ENGINE TUNE-UP [FS], Ignition Timing.)

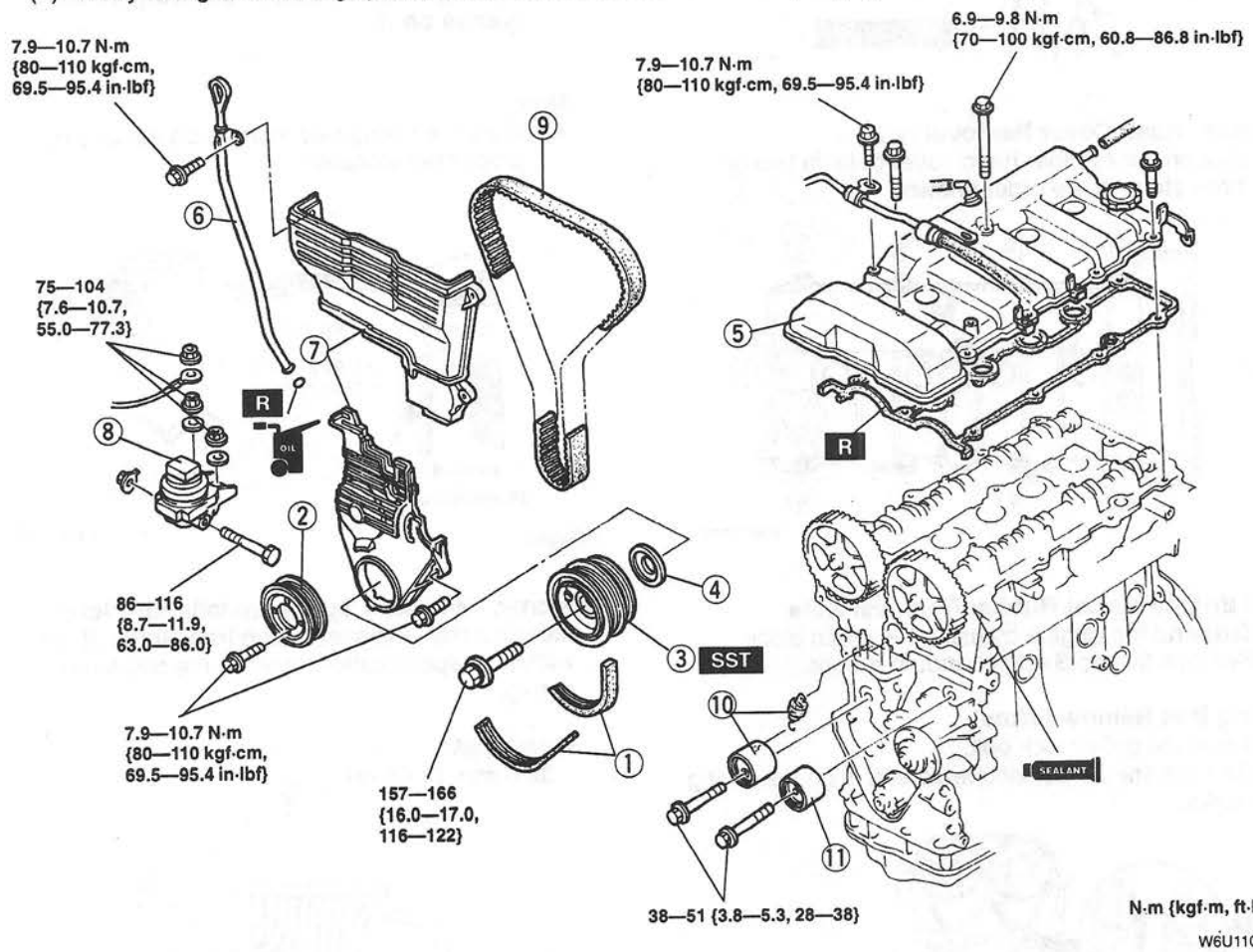

W6U110WAF

1	Drive belt ☞ 01–10A DRIVE BELT ADJUSTMENT [FS]
2	Water pump pulley ☞ Installation Note
3	Crankshaft pulley ☞ Removal Note ☞ Installation Note
4	Guide plate
5	Cylinder head cover ☞ Removal Note ☞ Installation Note

6	Dipstick and pipe
7	Timing belt cover
8	No.3 engine mount rubber ☞ Removal Note
9	Timing belt ☞ Removal Note ☞ Installation Note
10	Tensioner, tensioner spring ☞ Installation Note
11	Idler

Crankshaft Pulley Removal Note
- Hold the crankshaft by using the **SST**.

Caution
- **The crankshaft position sensor rotor is on the rear of the crankshaft pulley, and can be damaged easily.**

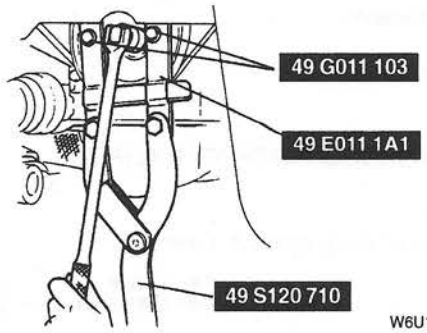

W6U110WAG

Cylinder Head Cover Removal Note
- Loosen the cylinder head cover bolts in two or three steps in the order shown.

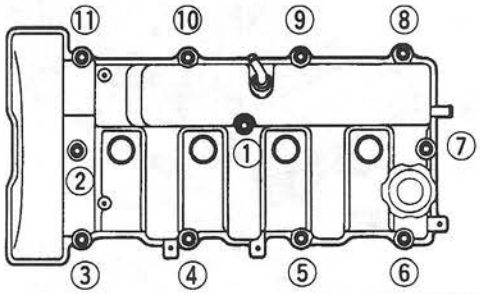

W6U110WAH

No.3 Engine Mount Rubber Removal Note
1. Suspend the engine by using the chain block.
2. Remove the No.3 engine mount rubber.

Timing Belt Removal Note
1. Install the pulley lock bolt.
2. Turn the crankshaft clockwise and align the timing marks.

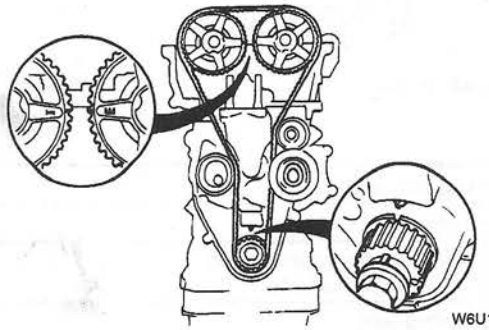
W6U110WAJ

3. Turn the tensioner clockwise by using an Allen wrench.
4. Disconnect the tensioner spring from the hook pin.

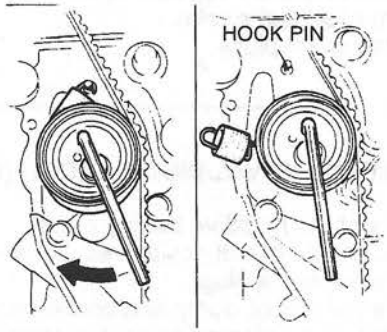

W6U110WAK

Caution
- **The following will damage the belt and shorten its life; forcefully twisting it, turning it inside out, or allowing oil or grease on it.**

Note
- Mark the timing belt rotation on the belt for proper reinstallation.

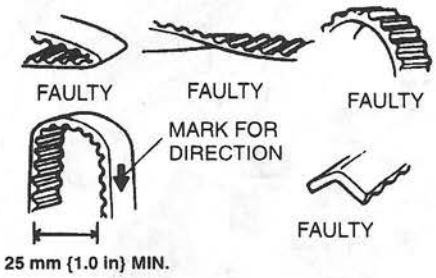

W6U110WAL

Tensioner, Tensioner Spring Installation Note
1. Measure the tensioner spring free length. If not within the specification, replace the tensioner spring.

Free length
36.6 mm {1.44 in}

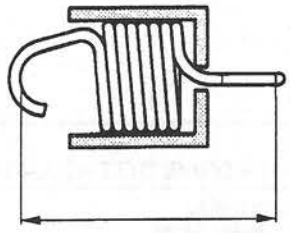
W6U110WAM

2. Install the tensioner.

3. Rotate the tensioner. If tensioner rotates with no resistance or does not rotate, replace the tensioner.

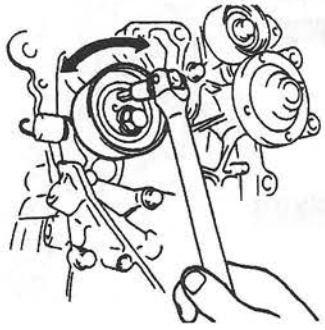

W6U110WAN

Timing Belt Installation Note

1. Verify that the timing belt pulley mark and camshaft pulley marks are aligned with the timing marks as shown.

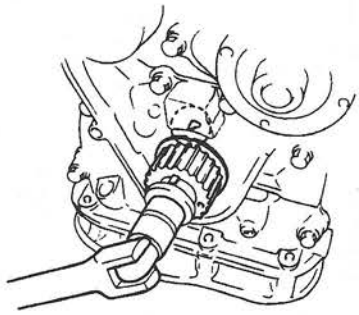

W6U110WAP

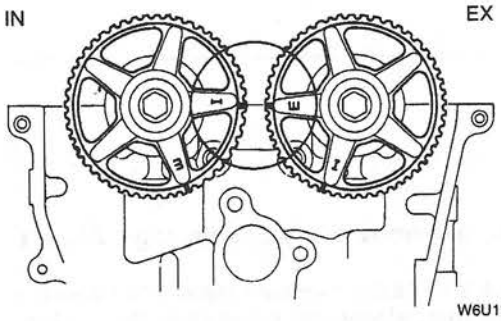

W6U110WAQ

2. Install the timing belt so that there is no looseness at the idler side.

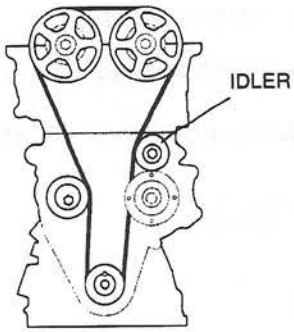

W6U110WAR

3. Turn the crankshaft clockwise twice, and align the timing marks.
4. Verify that all timing marks are correctly aligned. If not aligned, remove the timing belt and repeat from Step 1.

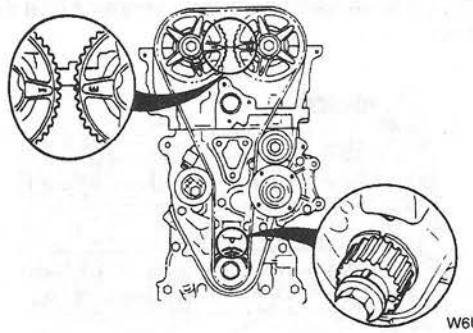

W6U110WAS

Caution

- **Be sure not to apply tension other than that of the tensioner spring.**

5. Turn the tensioner clockwise by using an Allen wrench.
6. Connect the tensioner to the hook pin.

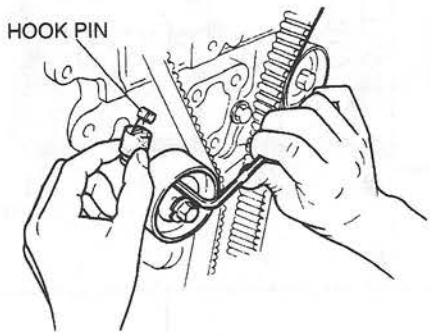

W6U110WAT

7. Turn the crankshaft clockwise twice, and verify that all timing marks are aligned. If not aligned, repeat from Step 1.

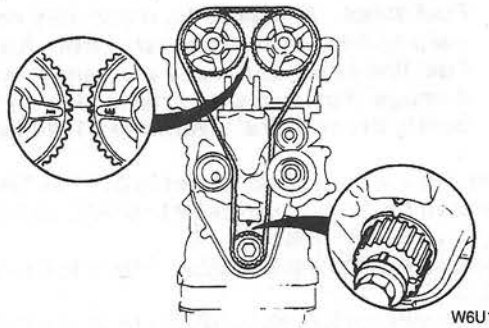

W6U110WAU

Cylinder Head Cover Installation Note

1. Verify that the grooves on the cylinder head cover are free of oil, water and other foreign material.
2. Install the cylinder head cover gasket into the cylinder head cover.
3. Apply silicone sealant to the cylinder head as shown.

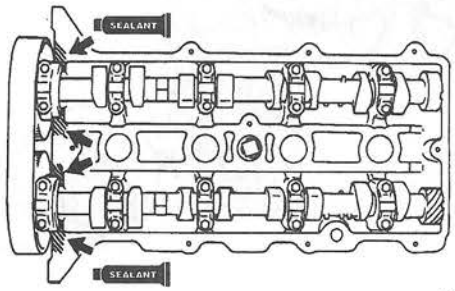

W6U110WAV

4. Tighten the cylinder head cover bolts in two or three steps in the order shown.

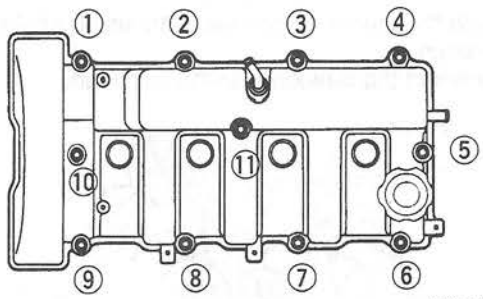

W6U110WAW

Crankshaft Pulley Installation Note

- Hold the crankshaft by using the **SST**.

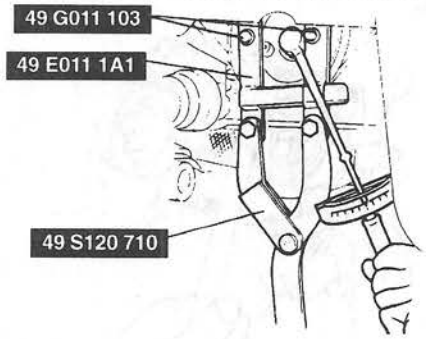

W6U110WAX

CYLINDER HEAD GASKET REPLACEMENT [FS]

W6U110W07

Warning

- **Fuel vapor is hazardous. It can very easily ignite, causing serious injury and damage. Always keep sparks and flames away from fuel.**
- **Fuel line spills and leaks are dangerous. Fuel can ignite and cause serious injuries or death and damage. Fuel can also irritate skin and eyes. To prevent this, always complete the "Fuel Line Safety Procedures". (Refer to 01–14 BEFORE REPAIR PROCEDURE.)**

1. Remove the timing belt. (Refer to 01–10A TIMING BELT REMOVAL/INSTALLATION [FS].)
2. Remove the front pipe. (Refer to 01–15 EXHAUST SYSTEM REMOVAL/INSTALLATION.)
3. Remove the air cleaner.
4. Remove the accelerator cable. (Refer to 01–13A ACCELERATOR CABLE INSPECTION/ADJUSTMENT [FS].)
5. Disconnect the fuel hose. (Refer to 01–14 BEFORE REPAIR PROCEDURE.) (Refer to 01–14 AFTER REPAIR PROCEDURE.)
6. Remove ignition coil.
7. Drain the engine coolant. (Refer to 01–12 ENGINE COOLANT REPLACEMENT.)
8. Remove in the order indicated in the table.
9. Install in the reverse order of removal.
10. Verify the engine oil level. (Refer to 01–11 ENGINE OIL INSPECTION.)
11. Inspect for the engine oil, engine coolant, and fuel leakage.
12. Verify the compression. (Refer to 01–10A COMPRESSION INSPECTION [FS].)
13. Start the engine and
    (1) Inspect the pulleys and the drive belt for runout and contact.
    (2) Verify the ignition timing. (Refer to 01–10A ENGINE TUNE-UP [FS], Ignition Timing Inspection.)
    (3) Verify the idle speed. (Refer to 01–10A ENGINE TUNE-UP [FS], Idle Speed Adjustment.)

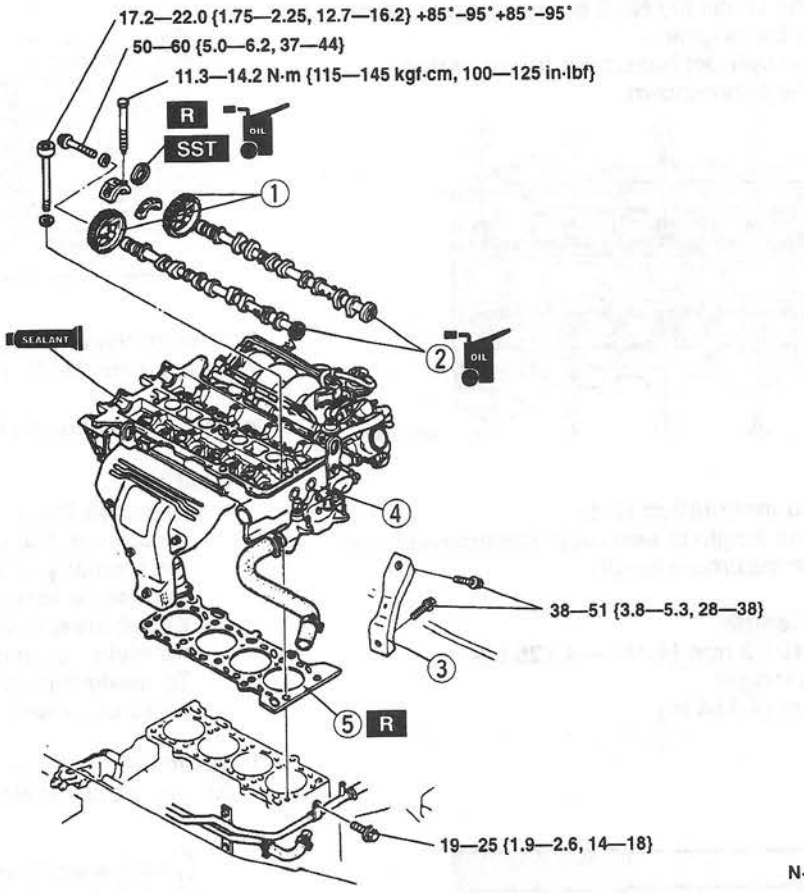

W6U110WAY

1	Camshaft pulley ☞ Removal Note ☞ Installation Note
2	Camshaft ☞ Removal Note ☞ Installation Note
3	Intake manifold bracket
4	Cylinder head ☞ Removal Note ☞ Installation Note
5	Cylinder head gasket

Camshaft Pulley Removal Note

- Hold the camshaft by using a wrench on the cast hexagon as shown, and loosen the camshaft pulley lock bolt.

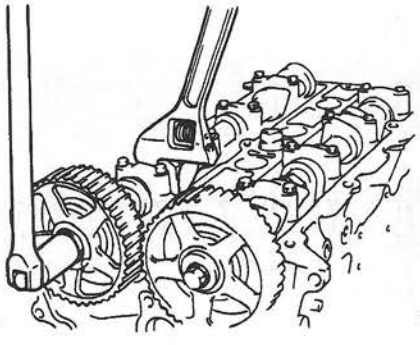

W6U110WAZ

Camshaft Removal Note

- Loosen the camshaft cap bolts in two or three steps in the order shown.

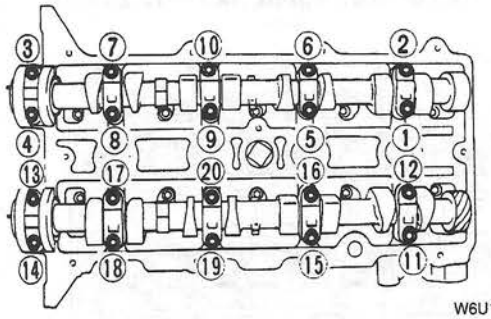

W6U110WB0

Cylinder Head Removal Note

1. Temporarily install the No.3 engine mount rubber to support the engine.
2. Loosen the cylinder head bolts in two or three steps in the order shown.

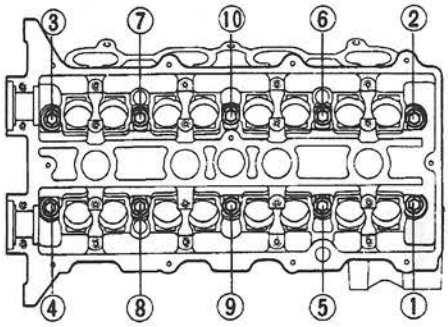

W6U110WB1

Cylinder Head Installation Note

1. Measure the length of each bolt. Replace any that exceed the maximum length.

Standard length
104.2—104.8 mm {4.103—4.125 in}
Maximum length
105.5 mm {4.154 in}

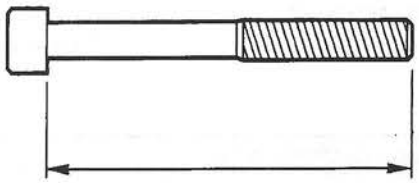
W6U110WB2

2. Tighten the cylinder head bolts in two or three steps in the order shown.

Tightening torque
17.2—22.0 N·m
{1.75—2.25 kgf·m, 12.7—16.2 ft·lbf}

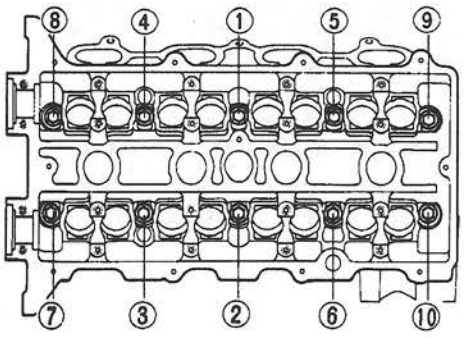

W6U110WB3

3. Put a paint mark on each bolt head.
4. Using the marks as a reference, tighten the bolts by turning each **85°—95°** in the sequence shown.
5. Further tighten each bolt by turning another **85°—95°** in the sequence as shown.

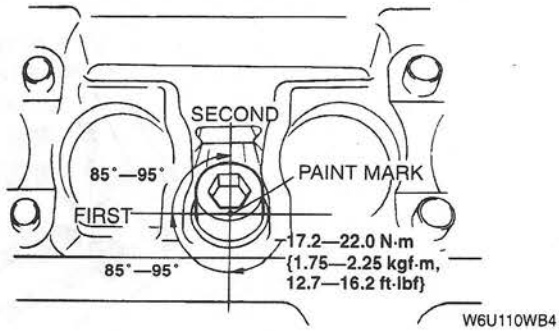

W6U110WB4

6. Support the engine by using the chain block.
7. Remove the No.3 engine mount rubber.

Camshaft Installation Note

Caution

- **Because there is little camshaft thrust clearance, the camshaft must be held horizontally while it is installed. Otherwise, excessive force will be applied to the thrust area, causing burr on the thrust receiving area of the cylinder head journal. To avoid this, the following procedure must be observed.**

1. Assemble camshaft onto the cylinder head, facing the cam noses at No.1 and No.3 cylinders as shown.

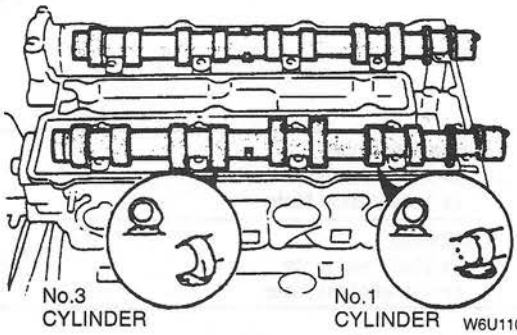

W6U110WB5

2. Apply silicone sealant to the areas shown. Keep the camshaft sliding surface free of sealant to prevent engine damage.

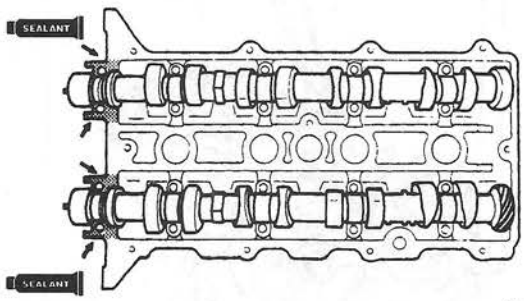

W6U110WB6

3. Apply engine oil to the camshaft and the cylinder head journals.
4. Install the camshaft caps to the positions from which they were removed.
5. Hand tighten the camshaft cap bolts marked 5, 7, 2, and 4.

6. Tighten the camshaft cap bolts in two or three steps in the order shown.

Tightening torque
11.3—14.2 N·m
{115—145 kgf·cm, 100—125 in·lbf}

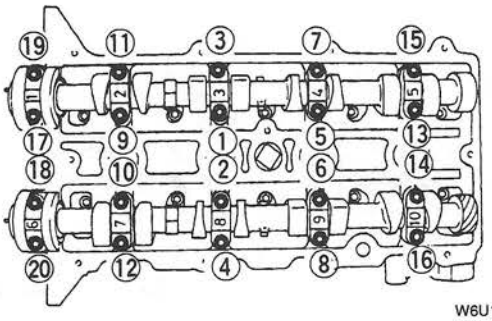

W6U110WB7

7. Verify that the camshaft settles horizontally when two bearing cap bolts at No.3 journal are tightened.
8. Apply clean engine oil to the camshaft oil seal.
9. Push the oil seal slightly in by hand.
10. Tap the oil seals in evenly by using the **SST** and a hammer.

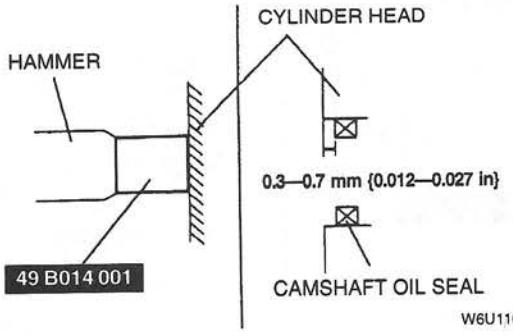

W6U110WB8

Camshaft Pulley Installation Note

1. Install the camshaft pulleys, positioning the dowel pins as shwon.

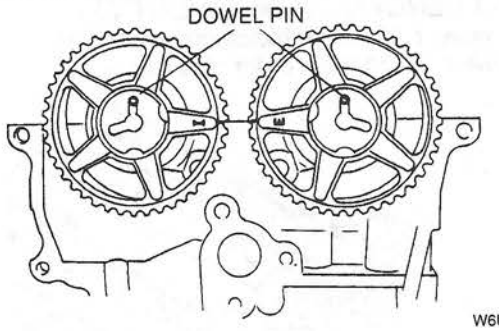

W6U110WB9

2. Hand tighten the camshaft pulley bolts.
3. Hold the camshaft by using a wrench on the cast hexagon as shown, and tighten each bolt.

Tightening torque
50—60 N·m {5.0—6.2 kgf·m, 37—44 ft·lbf}

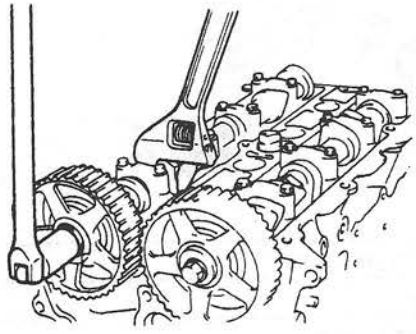

W6U110WBA

FRONT OIL SEAL REPLACEMENT [FS]

W6U110W08

1. Remove the timing belt. (Refer to 01–10A TIMING BELT REMOVAL/INSTALLATION [FS].)
2. Remove in the order indicated in the table.
3. Install in the reverse order of removal.

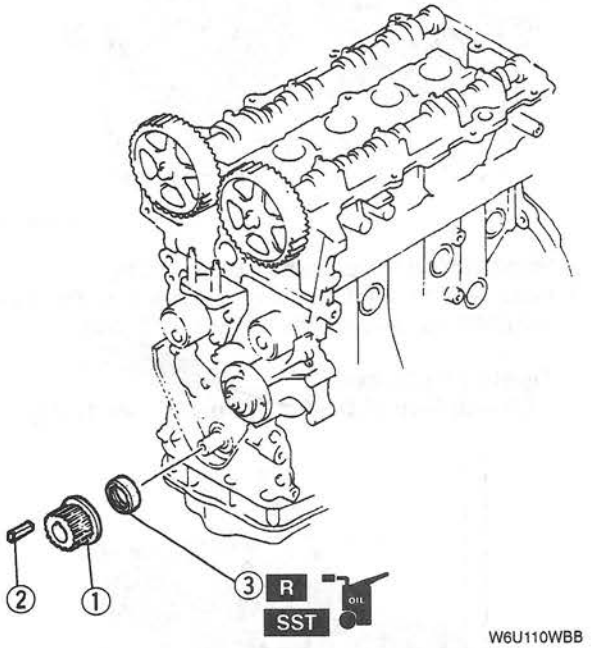

W6U110WBB

1	Timing belt pulley
2	Key
3	Front oil seal ☞ Removal Note ☞ Installation Note

Front Oil Seal Removal Note

1. Cut the oil seal lip by using a razor knife.
2. Remove the oil seal by using a screwdriver protected with a rag.

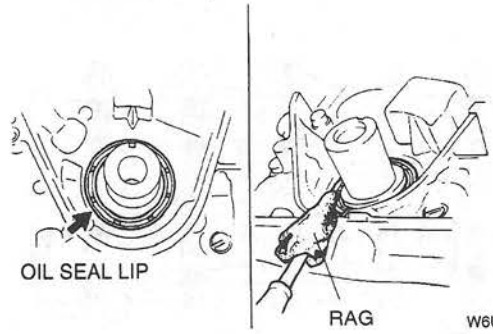

W6U110WBC

Front Oil Seal Installation Note

1. Apply clean engine oil to the oil seal lip.
2. Push the oil seal slightly in by hand.
3. Tap the oil seal in evenly by using the **SST** and a hammer.

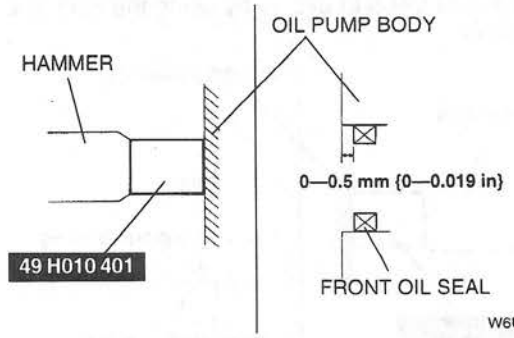

W6U110WBD

REAR OIL SEAL REPLACEMENT [FS]

W6U110W09

1. Remove the flywheel. (MTX) (Refer to 05–10 CLUTCH UNIT REMOVAL/INSTALLATION.)
2. Remove the drive plate. (ATX) (Refer to 05–17A DRIVE PLATE REMOVAL/INSTALLATION [LA4A-EL].)
3. Remove in the order indicated in the table.
4. Install in the reverse order of removal.

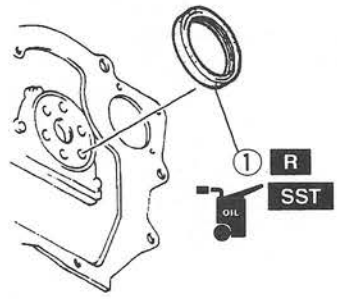

W6U110WBE

1	Rear oil seal ☞ Removal Note ☞ Installation Note

Rear Oil Seal Removal Note

1. Cut the oil seal lip by using a razor knife.
2. Remove the oil seal by using a screwdriver protected with a rag.

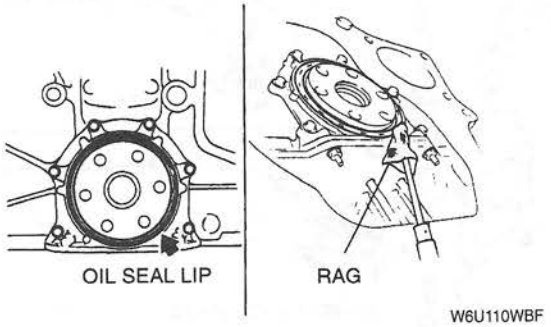

Rear Oil Seal Installation Note

1. Apply clean engine oil to the new oil seal lip.
2. Push the oil seal slightly in by hand.
3. Tap the oil seal in evenly by using the **SST** and a hammer.

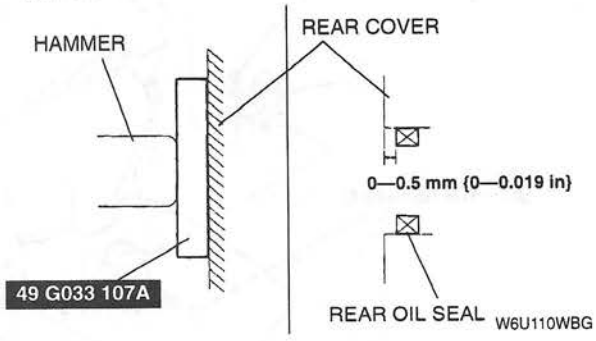

ENGINE REMOVAL/INSTALLATION [FS]

W6U110W10

Warning

- **Fuel vapor is hazardous. It can very easily ignite, causing serious injury and damage. Always keep sparks and flames away from fuel.**
- **Fuel line spills and leaks are dangerous. Fuel can ignite and cause serious injuries or death and damage. Fuel can also irritate skin and eyes. To prevent this, always complete the "Fuel Line Safety Procedures". (Refer to 01–14 BEFORE REPAIR PROCEDURE.)**

1. Disconnect the negative battery cable.
2. Remove the radiator. (Refer to 01–12 RADIATOR REMOVAL/INSTALLATION.)
3. Remove the air cleaner.
4. Remove the accelerator cable. (Refer to 01–13A ACCELERATOR CABLE INSPECTION/ADJUSTMENT [FS].)
5. Disconnect the fuel hose. (Refer to 01–14 BEFORE REPAIR PROCEDURE.) (Refer to 01–14 AFTER REPAIR PROCEDURE.)
6. Remove the front pipe. (Refer to 01–15 EXHAUST SYSTEM REMOVAL/INSTALLATION.)
7. Remove the rods, cables and pipes related to the transaxle.
8. Remove the battery.
9. Remove the fuse box.
10. Remove the P/S oil pump with the oil hose still connected. Position the P/S oil pump so that it is out of the way.
11. Remove the A/C compressor with the pipe still connected. Position the A/C compressor so that it is out of the way.
12. Remove the cruise actuator. (Refer to 01–20 CRUISE ACTUATOR REMOVAL/INSTALLATION.)
13. Remove the drive shaft. (Refer to 03–13 DRIVE SHAFT REMOVAL/INSTALLATION.)
14. Remove in the order indicated in the table.
15. Install in the reverse order of removal.
16. Start the engine and
    (1) Inspect for the engine oil, engine coolant, transaxle oil and fuel leakage.
    (2) Verify the ignition timing, idle speed and idle mixture. (Refer to 01–10A ENGINE TUNE-UP [FS], Ignition Timing Inspection, Idle Speed Adjustment, Idle Mixture Inspection.)
17. Perform a road test.

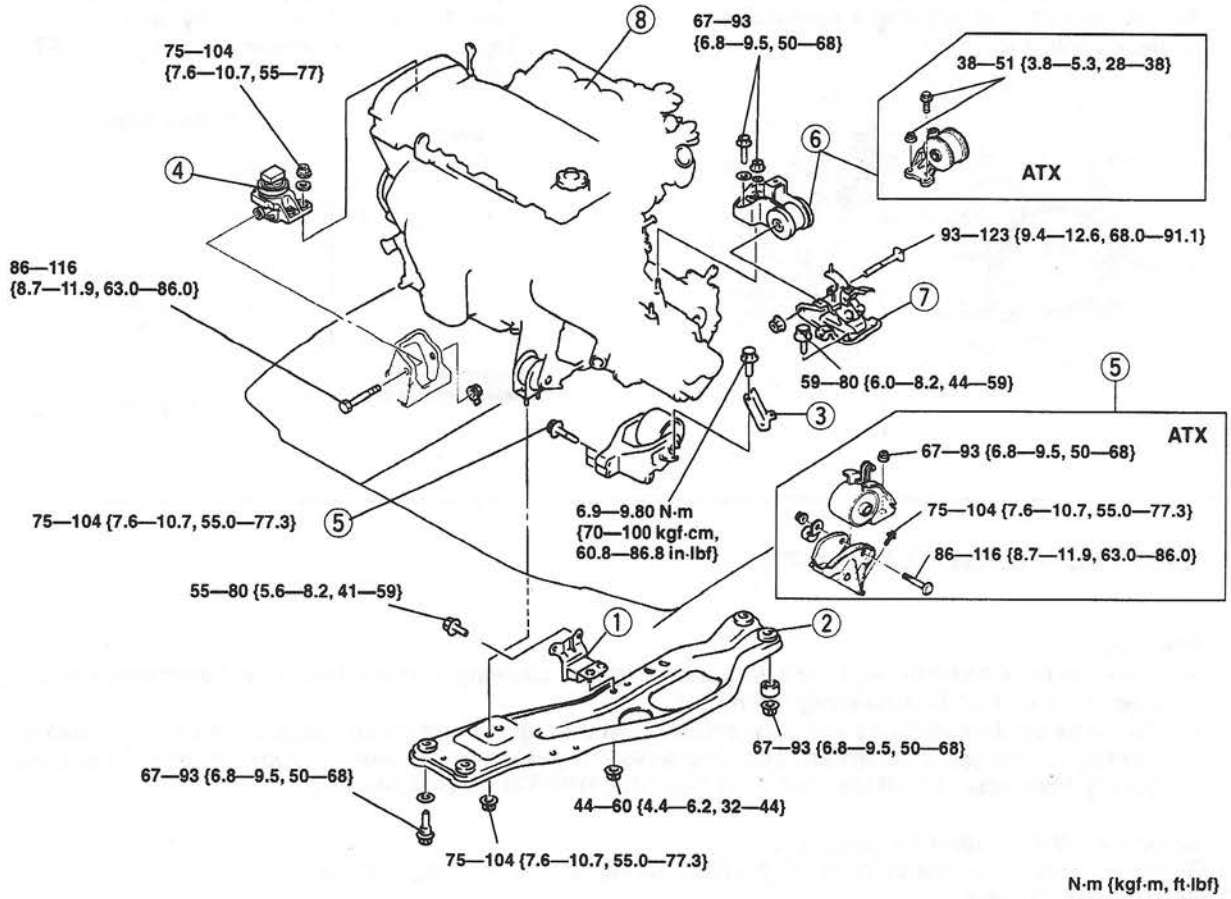

W6U110WBH

1	No.5 engine mount rubber
2	Engine mount member
3	No.1 engine mount stay bracket
4	No.3 engine mount rubber
5	No.1 engine mount bolt and nut

6	No.4 engine mount rubber
7	No.4 engine mount bracket ☞ Installation Note
8	Engine, transaxle

No.4 Engine Mount Bracket Installation Note

- Tighten the bolt in the order shown.

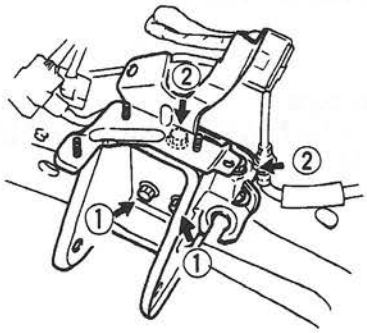

W6U110WBJ

ENGINE DISASSEMBLY/ASSEMBLY [FS]

W6U110W11

1. Disconnect the engine and transaxle. (Refer to 05–15 TRANSAXLE REMOVAL/INSTALLATION.) (Refer to 05–17A TRANSAXLE REMOVAL/INSTALLATION [LA4A-EL].)
2. Remove the intake-air system.
3. Remove the exhaust system.
4. Remove the oil filter. (Refer to 01–11 OIL FILTER, Oil Filter Replacement.)
5. Remove the thermostat. (Refer to 01–12 THERMOSTAT REMOVAL/INSTALLATION.)
6. Remove the ignition coil.
7. Remove the generator.
8. Disassemble in the order indicated in the table.
9. Assemble in the reverse order of disassembly.

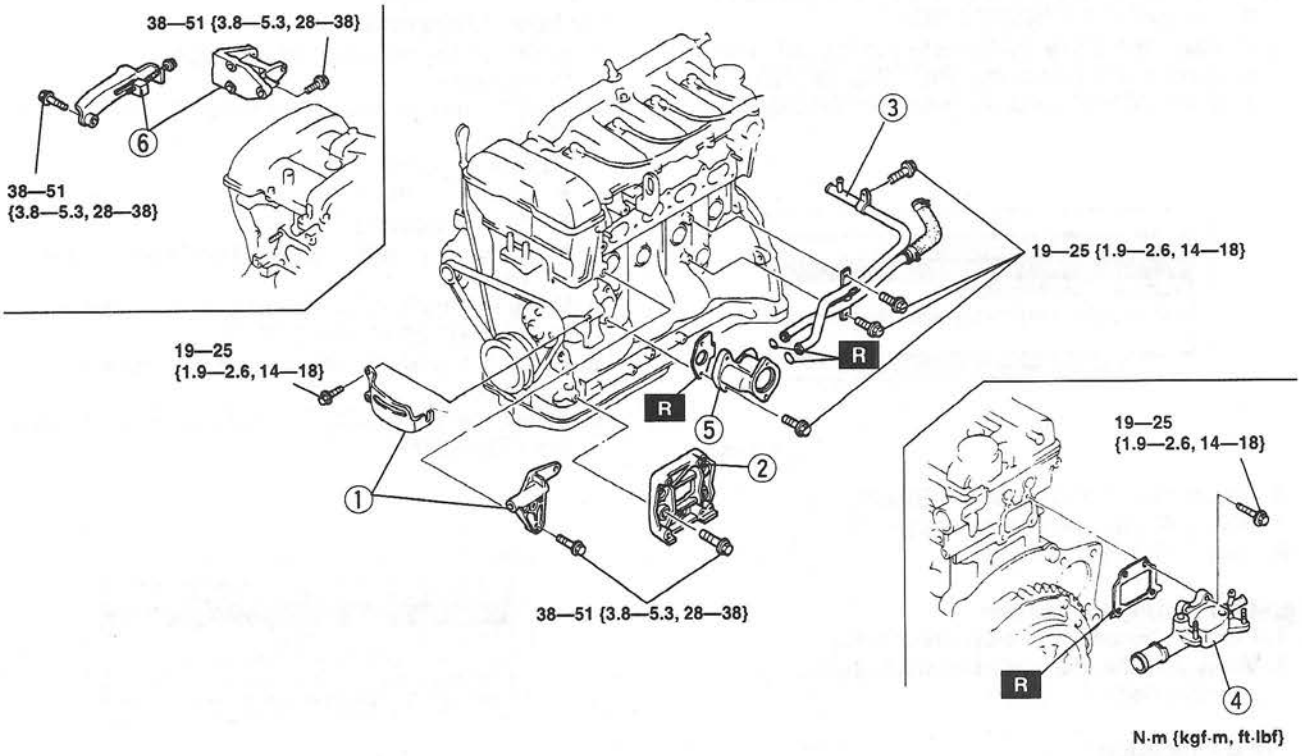

W6U110WBK

1	P/S oil pump bracket
2	A/C compressor bracket
3	Water bypass pipe

4	Water outlet
5	Thermostat housing
6	Generator bracket

ENGINE TUNE-UP [FS]

W6U110W24

Engine Tune-up Preparation

1. Warm up the engine to the normal operating temperature.
2. Shift transaxle into Neutral (MTX) or P position (ATX).
3. Turn off all electrical loads.
   - Headlight
   - Blower
   - Rear window defroster
   - Power steering
4. Verify that the battery is fully charged. (Refer to 01–17 BATTERY INSPECTION.)
5. Connect the **SSTs** (NGS tester) to the data link connector and select the "PID/DATA MONITOR AND RECORD" function and press TRIGGER.

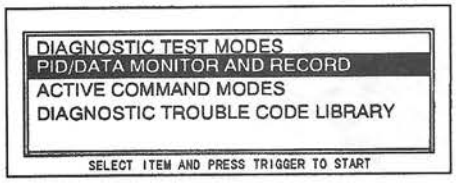

W6U110WDX

6. Select "RPM" and press TRIGGER.
7. Wait until the electrical fan stops.
8. Select "START" to begin.

Ignition Timing Inspection

1. Perform "Engine Tune-up Preparation".
2. Verify that the idle speed is within the specification.

Specification
MTX: 550—850 (700 ± 150) rpm
ATX: 500—800 (650 ± 150) rpm

3. If not as specified, adjust the idle speed. (Refer to Idle Speed Adjustment.)
4. Connect a timing light to the high-tension lead of the No.1 cylinder.
5. Verify that the timing mark (yellow) is within the specification.



W6U110WDY

Specification
MTX: BTDC 6—18° (12° ± 6°)/550—850 rpm
ATX: BTDC 6—18° (12° ± 6°)/500—800 rpm

6. If not as specified, inspect the following.
   - Camshaft position sensor
   - Crankshaft position sensor
   - Throttle position sensor
   - Engine coolant temperature sensor
   - Neutral switch (MTX)
   - Clutch switch (MTX)
   - Transaxle range switch (ATX)
7. If the devices are normal, replace the PCM.

Idle Speed Adjustment

1. Warm up the engine to normal operating temperature.
2. Shift the transaxle into Neutral (MTX) or P position (ATX).
3. Turn off all loads.
   - Blower motor
   - Power steering
   - Electrical loads (i.g, headlight, rear window defroster)
4. Verify that the battery is fully charged. (Refer to 01–17 BATTERY INSPECTION.)
5. Connect the **SSTs** (NGS tester) to data link connector.
6. Select the "DIAGNOSTIC DATA LINK" and press the TRIGGER.

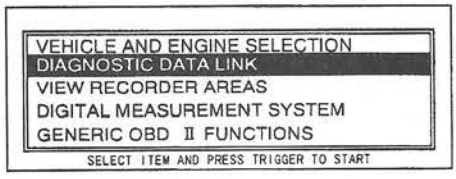

W6U110WZ0

7. Select the "PCM-POWERTRAIN CONTROL MODULE" and press the TRIGGER.

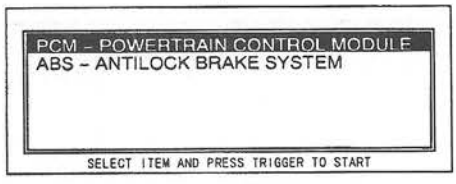

W6U110WZ1

8. Select "PID/DATA MONITOR AND RECORD" and press the TRIGGER.

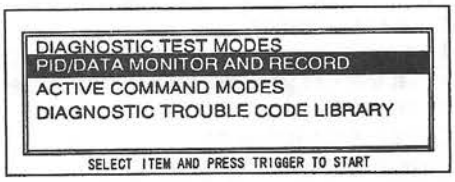

W6U110WZ2

9. Select the "RPM" and press the TRIGGER.
10. Wait until the electrical fans stop.
11. Verify that the idle speed is within specifications.

Specifications
MTX: 550—850 (700 ± 150) rpm
ATX: 500—800 (650 ± 150) rpm

12. If not within specifications, adjust the idle speed as follows.

Caution
- **The air adjusting screw (AAS) must not be adjusted, when the headlight HIGH system is malfunctioning. Any improper adjustment may affect engine performance.**

Note
- In order to activate the "KOER ON-DEMAND SELF-TEST" after completion of the following procedure, turn off the ignition switch at once, then operate the "KOER ON-DEMAND SELF-TEST".

(1) Select "HDLMP" in the "PID/DATA MONITOR AND RECORD" and press the TRIGGER.
(2) Verify that the "HDLMP" status changes from OFF to ON when the headlight switch is turned to the passing position. If it does not change, inspect following harnesses, connectors and terminals of the headlight signal circuit.
- From battery to combination switch
- From combination switch to PCM

(3) Connect the inductive pick-up type tachometer to the high tension lead.

Note
- The inductive pick-up type tachometer may indicate double engine speed.

(4) Select the "DIAGNOSTIC TEST MODES" and press the TRIGGER.
(5) Select the "KOER ON-DEMAND SELF-TEST" and press the TRIGGER.

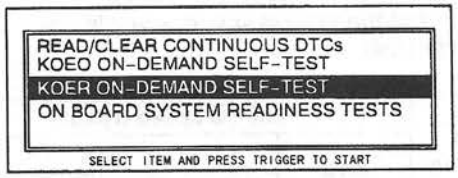

W6U110WZ3

(6) Turn the headlight switch to the passing position more than three times while each "passing" for 2 seconds after the "FOR EXAMPLE BOO, PSP AND TCS" is displayed.
(7) Make sure the engine speed is fixed.

Caution
- **The throttle adjusting screw is set at the factory and must not be adjusted. Any adjustment may affect engine performance.**

(8) Adjust the idle speed to the following specifications by turning the air adjusting screw within 2 minutes after the headlight switch is turned to passing position more than three times.

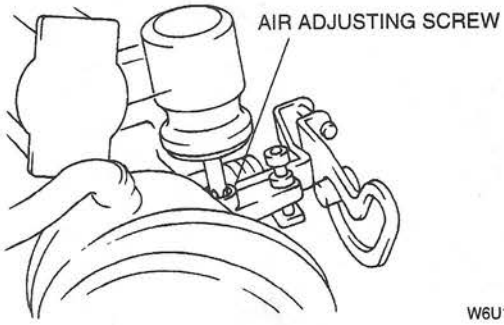

W6U110WDZ

Specifications
MTX: 550—850 (700 ± 150) rpm
ATX: 500—800 (650 ± 150) rpm

Idle-up Speed Inspection

1. Perform "Engine Tune-up Preparation".
2. Verify that the idle speed is normal.
3. Verify that the idle-up speed is within the specification.

Load condition	Idle-up speed (rpm)*1		
	MTX	ATX	
		N, P position	D range
E/L ON*2	625—925	525—825	525—825
A/C ON*3	625—925	500—800	500—800
P/S ON*4	550—850	500—800	500—800

*1 : Excludes temporary idle speed drop just after the electrical loads (E/L) are turned on.

*2 : Headlight is on, Fan switch (3rd or higher) and Cooling fan are operating.

*3 : A/C switch and fan switch are on.

*4 : Steering wheel is fully turned.

4. If not as specified with all load conditions, inspect the idle air control valve.
5. If not as specified with some load conditions, inspect related input switches, harnesses and connectors.

Idle Mixture Inspection

1. Perform "Engine Tune-up Preparation".
2. Verify that the idle speed and ignition timing are within the specification.
3. Insert an exhaust gas analyzer to the tailpipe.
4. Verify that the CO and HC concentrations are within the regulation.
5. If not, inspect the following.
   - On-board diagnostic system
   - Heated oxygen sensor (Front, Rear)
   - Intake manifold vacuum
   - Fuel line pressure
   - Ignition timing control
6. If the systems are normal, replace the three way catalytic converter.

01–10B MECHANICAL [KL]

DRIVE BELT INSPECTION [KL] **01–10B–1**
Drive Belt Deflection Check **01–10B–1**
Drive Belt Tension Check **01–10B–2**
DRIVE BELT ADJUSTMENT [KL] **01–10B–2**
VALVE CLEARANCE INSPECTION [KL] **01–10B–2**
VALVE CLEARANCE ADJUSTMENT [KL] **01–10B–3**
COMPRESSION INSPECTION [KL] **01–10B–5**
TIMING BELT REMOVAL/INSTALLATION [KL] **01–10B–6**
Crankshaft Pulley Removal Note **01–10B–7**
No.3 Engine Mount Rubber Removal Note **01–10B–7**
No.1 Idler Removal Note **01–10B–7**
Timing Belt Removal Note **01–10B–7**
Timing Belt Auto Tensioner Installation Note **01–10B–7**
Timing Belt Installation Note **01–10B–8**
Crankshaft Pulley Installation Note ... **01–10B–9**
CYLINDER HEAD GASKET REPLACEMENT [KL] **01–10B–10**
Camshaft Pulley Removal Note **01–10B–11**
Camshaft Removal Note **01–10B–11**
Cylinder Head Removal Note **01–10B–12**
Cylinder Head Gasket Installation Note **01–10B–12**
Cylinder Head Installation Note **01–10B–12**
Camshaft Installation Note **01–10B–12**
Camshaft Pulley Installation Note **01–10B–14**
Cylinder Head Cover Installation Note **01–10B–14**
FRONT OIL SEAL REPLACEMENT [KL] **01–10B–15**
Front Oil Seal Removal Note **01–10B–15**
Front Oil Seal Installation Note **01–10B–15**
REAR OIL SEAL REPLACEMENT [KL] **01–10B–16**
Rear Oil Seal Removal Note **01–10B–16**
Rear Oil Seal Installation Note **01–10B–16**
ENGINE REMOVAL/INSTALLATION [KL] **01–10B–17**
No.4 Engine Mount Bracket Installation Note **01–10B–18**
ENGINE DISASSEMBLY/ASSEMBLY [KL] **01–10B–18**
ENGINE TUNE-UP [KL] **01–10B–19**
Engine Tune-up Preparation **01–10B–19**
Ignition Timing Inspection **01–10B–19**
Idle Speed Adjustment **01–10B–19**
Idle-up Speed Inspection **01–10B–21**
Idle Mixture Inspection **01–10B–21**

DRIVE BELT INSPECTION [KL]

Drive Belt Deflection Check

1. Verify the drive belt deflection when the engine is cold, or at least 30 minutes after the engine has stopped. Apply moderate pressure **98 N {10 kgf, 22 lbf}** midway between the specified pulleys.

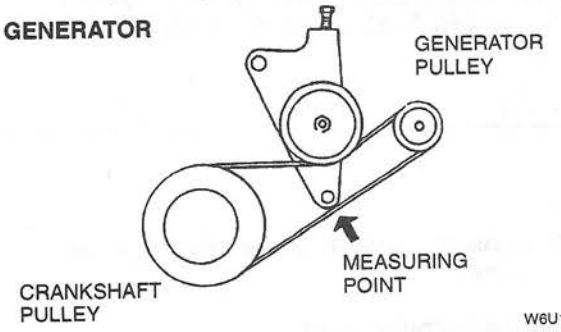

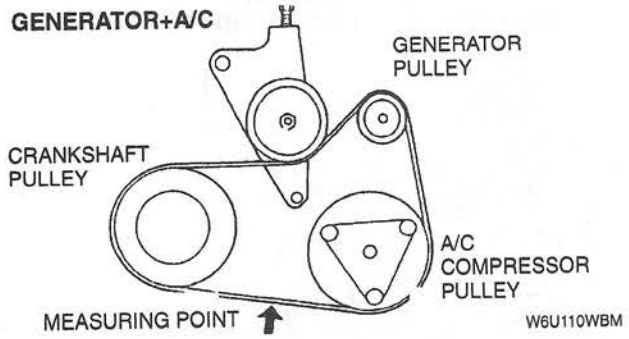

W6U110W12

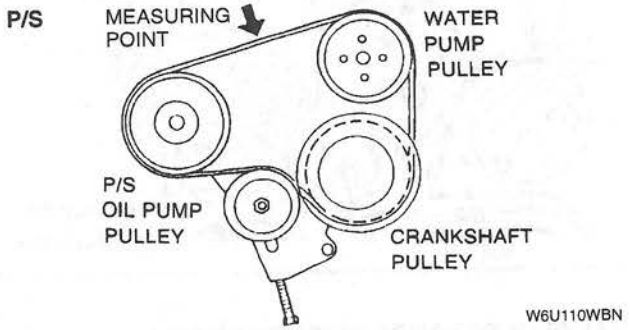

Deflection

mm {in}

Drive belt	*New	Used	Limit
Generator	6.0—7.0 {0.24—0.27}	7.0—8.0 {0.28—0.31}	10.0 {0.39}
Generator + A/C	5.5—6.5 {0.22—0.25}	6.5—7.5 {0.26—0.29}	9.0 {0.35}
P/S	6.0—7.0 {0.24—0.27}	7.0—8.0 {0.28—0.31}	9.0 {0.35}

* : A belt that has been on a running engine for less than 5 minutes.

2. If the deflection is not within the specification, adjust it. (Refer to 01–10B DRIVE BELT ADJUSTMENT [KL].)

Drive Belt Tension Check

1. Belt tension can be verified in place of belt deflection. Verify the drive belt tension when the engine is cold, or at least 30 minutes after the engine has stopped. Using the **SST**, verify the belt tension between any two pulleys.

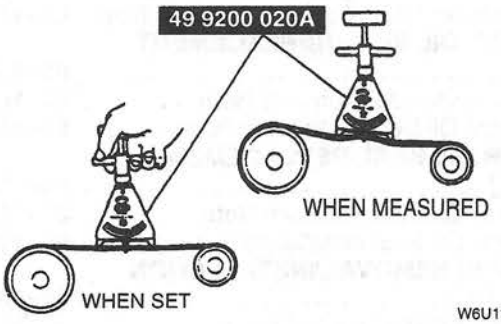

W6U110WBP

Tension

N {kgf, lbf}

Drive belt	*New	Used	Limit
Generator	687—882 {70—90, 154—198}	491—686 {50—70, 110—154}	294 {30, 66}
Generator + A/C	687—882 {70—90, 154—198}	491—686 {50—70, 110—154}	294 {30, 66}
P/S	540—686 {55—70, 121—154}	393—539 {40—55, 88—121}	343 {35, 77}

* : A belt that has been on a running engine for less than 5 minutes.

2. If the tension is not within the specification, adjust it. (Refer to 01–10B DRIVE BELT ADJUSTMENT [KL].)

DRIVE BELT ADJUSTMENT [KL]

1. Loosen locknut A.
2. Adjust the belt deflection or tension by turning the adjusting bolt B. (Refer to 01–10B DRIVE BELT INSPECTION [KL].)
3. Tighten locknut A.

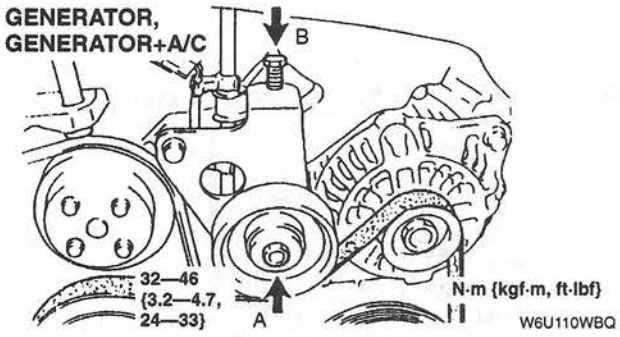

W6U110WBQ

W6U110W13

P/S

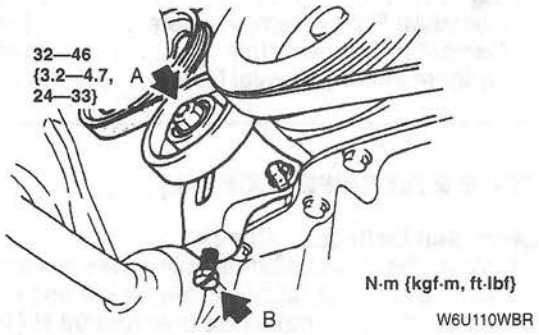

W6U110WBR

4. Verify the belt deflection or tension. (Refer to 01–10B DRIVE BELT INSPECTION [KL].)

VALVE CLEARANCE INSPECTION [KL]

1. Remove the intake manifold. (Refer to 01–13B INTAKE-AIR SYSTEM REMOVAL/INSTALLATION [KL].)
2. Remove the cylinder head cover.
3. Verify that the engine is in cold condition.
4. Measure the valve clearance.
   (1) Turn the crankshaft clockwise so that the No.1 piston is at TDC of the compression stroke.

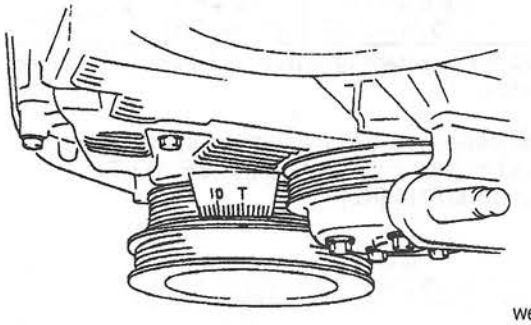

W6U110WC3

W6U110W14

(2) Measure the valve clearances at A in the figure.

Standard [Engine cold]
IN: 0.245—0.315 mm {0.0097—0.0124 in}
EX: 0.265—0.335 mm {0.0105—0.0131 in}

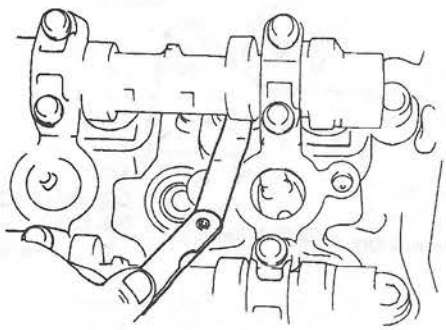

W6U110WBS

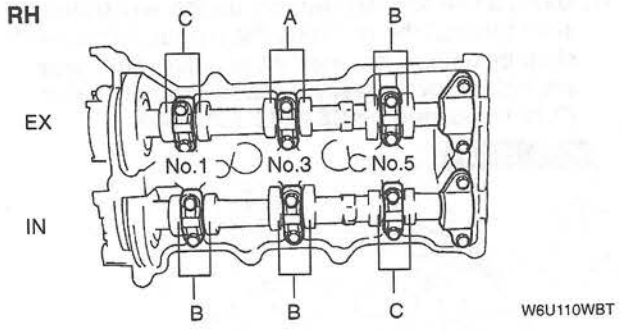

(3) If the valve clearance exceeds the standard, replace the adjustment shim.
(4) Turn the crankshaft approx. 240° clockwise so that the No.3 piston is at TDC of the compression stroke.
(5) Measure the valve clearances at B in the figure.

Standard [Engine cold]
IN: 0.245—0.315 mm {0.0097—0.0124 in}
EX: 0.265—0.335 mm {0.0105—0.0131 in}

(6) If the valve clearance exceeds the standard, replace the adjustment shim.
(7) Turn the crankshaft approx. 240° clockwise so that the No.5 piston is at TDC of the compression stroke.
(8) Measure the valve clearances at C in the figure.

Standard [Engine cold]
IN: 0.245—0.315 mm {0.0097—0.0124 in}
EX: 0.265—0.335 mm {0.0105—0.0131 in}

(9) If the valve clearance exceeds the standard, replace the adjustment shim. (Refer to 01–10B VALVE CLEARANCE ADJUSTMENT [KL].)
5. Install the cylinder head cover. (Refer to 01–10B CYLINDER HEAD GASKET REPLACEMENT [KL], Cylinder Head Cover Installation Note.)
6. Install the intake manifold.

VALVE CLEARANCE ADJUSTMENT [KL]

Perform this same procedure for all camshafts requiring valve clearance adjustment.
1. Turn the crankshaft clockwise so that the cams on the camshaft requiring valve clearance adjustment points straight up.

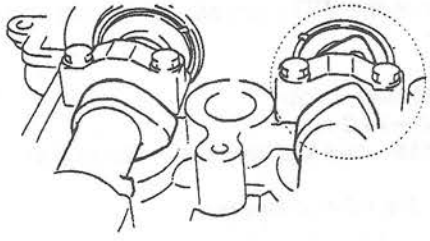
W6U110WBV

2. Remove the camshaft cap bolts as necessary.
- RH exhaust side adjustment shim removal: A
- RH intake side adjustment shim removal: B
- LH intake side adjustment shim removal: C
- LH exhaust side adjustment shim removal: D

W6U110W15

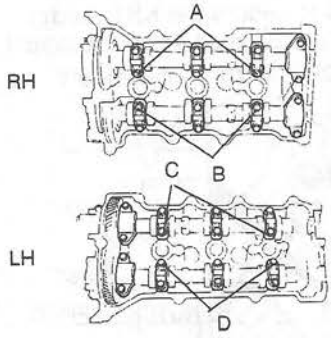

W6U110WBW

3. Install the **SSTs** as shown.

Tightening torque
11.3—14.2 N·m
{115—145 kgf·cm, 100—125 in·lbf}

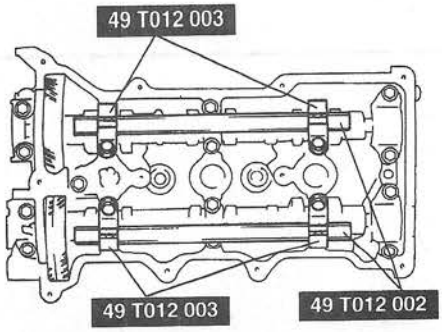

W6U110WBX

4. Align the marks on the **SSTs** (shaft and shaft clamp).

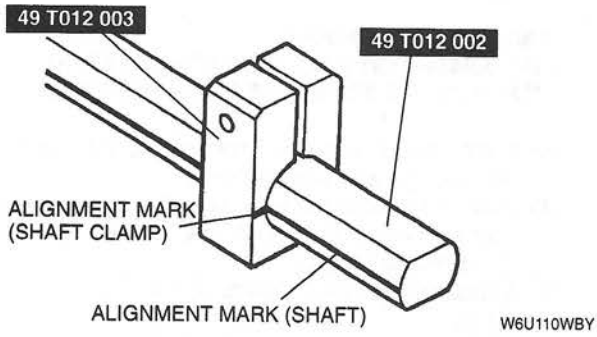

5. Face the **SST** (body) toward the center of the cylinder head, and mount it on the camshaft by using the camshaft cap bolt holes.
6. Tighten bolts A to secure the **SST** (shaft).

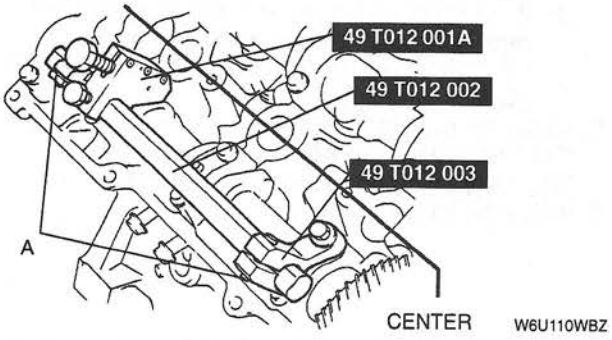

7. Position the notch of the tappet so that a small screwdriver can be inserted.
8. Set the **SST** on the tappet by its notch.
9. Tighten bolt B to secure the **SST** (body).
10. Tighten bolt C, and press down the tappet.

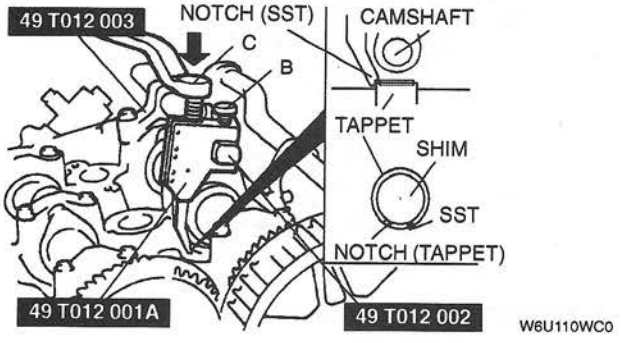

11. Using a fine screwdriver, pry up the adjustment shim through the notch on the tappet. Remove the shim by using a magnet. If the adjustment shim are not removed easily, install a washer (3 mm {0.12 in}) under the **SST** (49 T012 003).

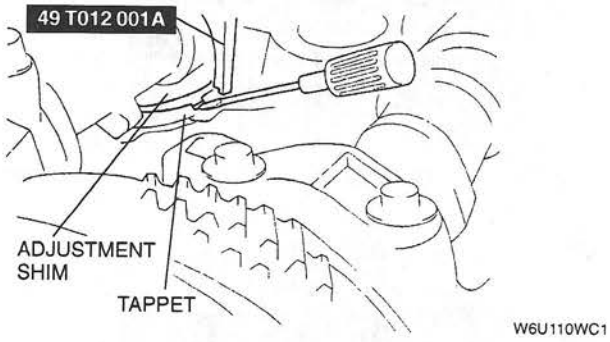

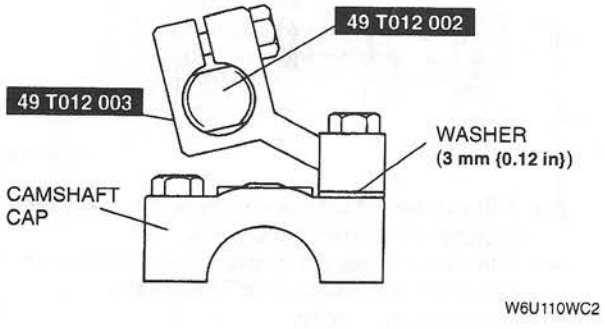

12. Select proper adjustment shim.

    New adjustment shim
    = Removed shim thickness + Measured valve clearance – Standard valve clearance
    (0.28 mm {0.011 in} (IN),
    0.30 mm {0.012 in} (EX))

13. Push the selected shim into the tappet.
14. Loosen bolt C to allow the tappet to move up.
15. Loosen bolt B and remove the **SST** (body).
16. Remove the **SSTs** and tighten the camshaft cap bolts.

    Tightening torque
    11.3—14.2 N·m
    {115—145 kgf·cm, 100—125 in·lbf}

17. Verify the valve clearance.

    Standard [Engine cold]
    IN: 0.245—0.315 mm {0.0097—0.0124 in}
    EX: 0.265—0.335 mm {0.0105—0.0131 in}

COMPRESSION INSPECTION [KL]

W6U110W16

1. Verify that the battery is fully charged. Charge it again as necessary. (Refer to 01–17 BATTERY INSPECTION.)
2. Warm up the engine to the normal operating temperature.
3. Stop the engine and allow it to cool for about 10 minutes.
4. Perform "Fuel Line Safety Procedures". Leave the fuel pump relay removed. (Refer to 01–14 BEFORE REPAIR PROCEDURE.)
5. Remove the spark plugs.
6. Disconnect the ignition coil connector.
7. Install the **SST** into the No.1 spark plug hole.
8. Fully depress the accelerator pedal and crank the engine.
9. Record the maximum gauge reading.
10. Inspect each cylinder as above.

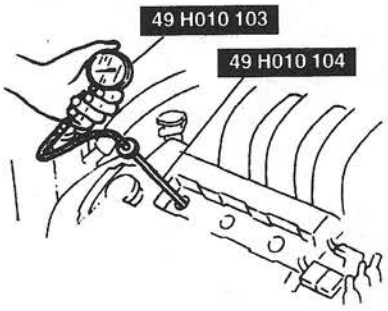

W6U110WC5

Compression

kPa {kgf/cm^2, psi} [rpm]

Standard	1,393 {14.2, 202} [250]
Minimum	971 {9.9, 141} [250]
Maximum difference between cylinders	196 kPa {2.0 kgf/cm^2, 28 psi}

11. If the compression in one or more cylinders is low, pour a small amount of clean engine oil into the cylinder and check the compression again.
    (1) If the compression increases, the piston, piston rings, or cylinder wall may be worn.
    (2) If the compression stays low, a valve may be stuck or improperly seated.
    (3) If the compression in adjacent cylinders stays low, the cylinder head gasket may be damaged or the cylinder head is distorted.
12. Remove the **SST**.
13. Connect the ignition coil connector.
14. Install the fuel pump relay.
15. Install the spark plugs.

Tightening torque
15—22 N·m {1.5—2.3 kgf·m, 11—16 ft·lbf}

TIMING BELT REMOVAL/INSTALLATION [KL]

W6U110W17

1. Disconnect the negative battery cable.
2. Remove the crankshaft position sensor.
3. Remove the P/S oil pump with the pipe still connected.
4. Remove the spark plug.
5. Remove in the order indicated in the table.
6. Install in the reverse order of removal.
7. Verify the air gap. (Refer to 01–40B CRANKSHAFT POSITION SENSOR INSPECTION [KL].)
8. Start the engine and
   (1) Inspect for the pulleys and drive belt for runout and contact.
   (2) Verify the ignition timing. (Refer to 01–10B ENGINE TUNE-UP [KL], Ignition Timing Adjustment.)

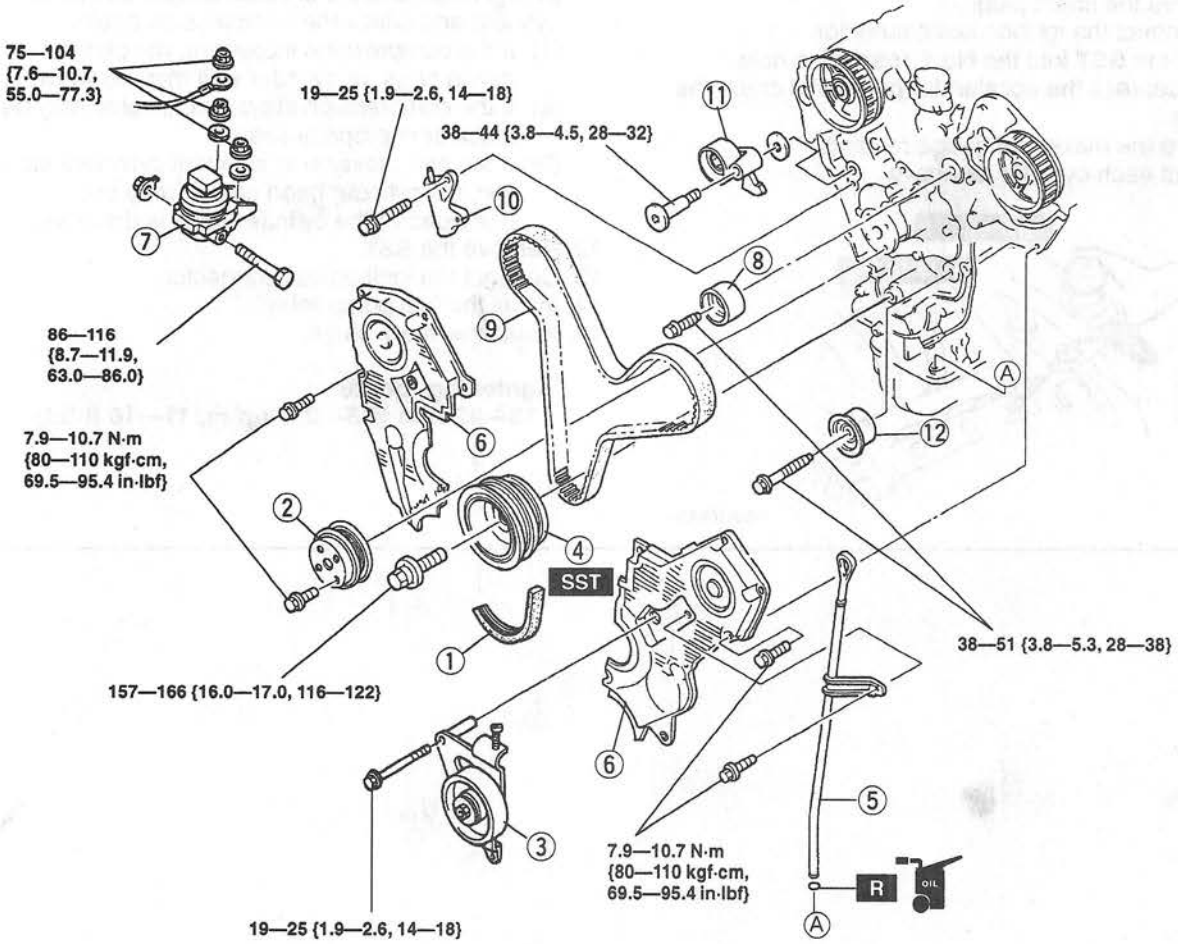

N·m {kgf·m, ft·lbf}

W6U110WC6

1	Drive belt ☞ 01–10B DRIVE BELT ADJUSTMENT [KL]
2	Water pump pulley
3	Idler pulley bracket
4	Crankshaft pulley ☞ Removal Note ☞ Installation Note
5	Dipstick and pipe
6	Timing belt cover
7	No.3 engine mount rubber ☞ Removal Note

8	No.1 idler ☞ Removal Note
9	Timing belt ☞ Removal Note ☞ Installation Note
10	Timing belt auto tensioner ☞ Installation Note
11	Tensioner
12	No.2 idler

Crankshaft Pulley Removal Note
- Hold the crankshaft by using the **SST**.

Caution
- **The crankshaft position sensor rotor is on the rear of the crankshaft pulley, and can be damaged easily.**

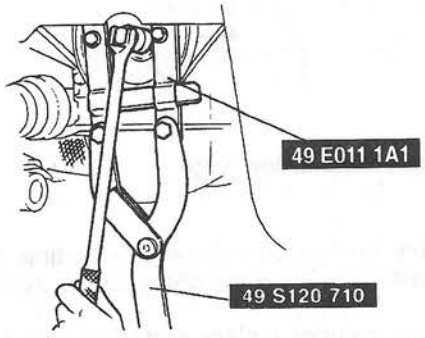

No.3 Engine Mount Rubber Removal Note
1. Support the engine by using the chain block.
2. Remove the No.3 engine mount rubber.

No.1 Idler Removal Note
1. Install the crankshaft pulley bolt.
2. Turn the crankshaft clockwise and align the timing marks. (No.1 piston is at TDC of the compression stroke.)

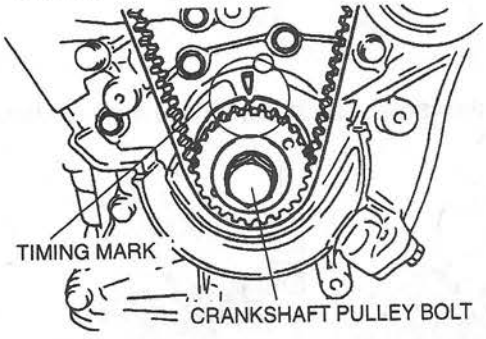

Caution
- **When removing the pulley bolt, hold the pulley so that the bolt holes are aligned, otherwise the threads can be damaged.**

3. Remove the No.1 idler pulley.

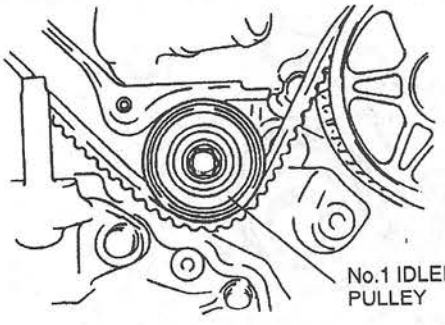

Timing Belt Removal Note

Caution
- **When removing the bolt, hold the tensioner so that the bolt holes are aligned, otherwise the threads can be damaged.**

- Loosen the auto tensioner bolts and remove the lower bolt.

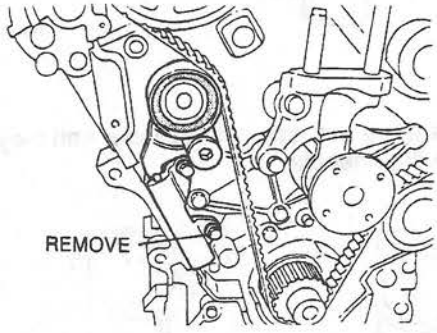

Caution
- **The following will damage the belt and shorten its life; forcefully twisting it, turning it inside out, bending it, or allowing oil or grease on it.**

Note
- Mark the timing belt rotation on the belt for proper reinstallation.

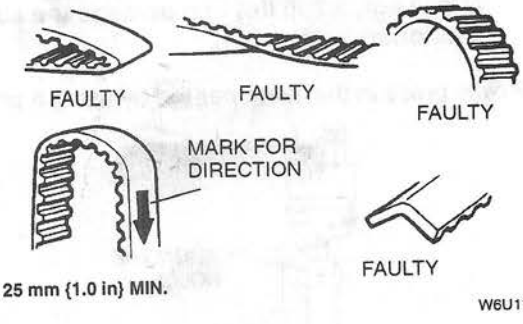

Timing Belt Auto Tensioner Installation Note
1. Measure the tensioner rod projection length. Replace the auto tensioner if necessary.

Projection (Free length)
Type A: 14.3—15.1 mm {0.563—0.594 in}
Type B: 12.0—13.0 mm {0.473—0.511 in}

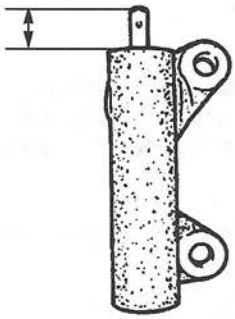

W6U110WCC

Note
- There are two types of tensioner and they are interchangeable.

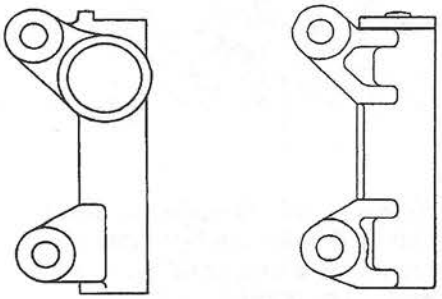

W6U110WCD

2. Inspect the auto tensioner for oil leakage. Replace the auto tensioner as necessary.

Caution
- **Applying pressure of more than 9.8 kN {1,000 kgf, 2,200 lbf} can damage the auto tensioner.**

3. Slowly press in the tensioner rod by using a press.

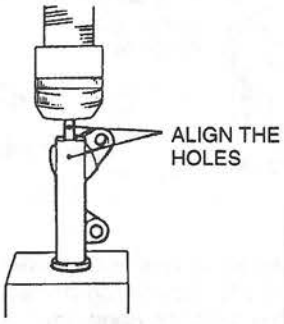

W6U110WCE

4. Insert a pin into the hole in the body, as shown, to hold the tensioner rod.

Pin diameter
1.4 mm {0.055 in}

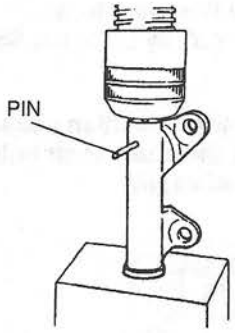

W6U110WCF

Timing Belt Installation Note

Note
- This must be done to reduce the timing belt resistance when the idler pulley is installed.

1. Set the tensioner in place and hand tighten the tensioner upper bolt.

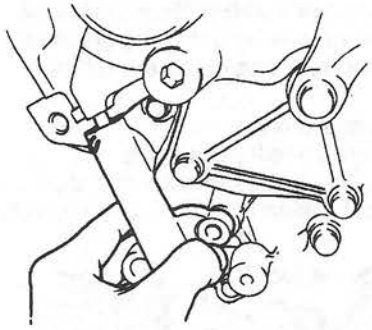

W6U110WCG

2. Turn the camshafts clockwise and align the timing marks.

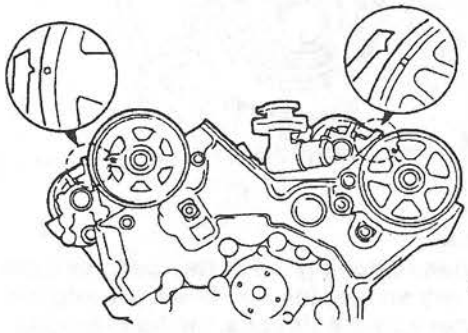

W6U110WCH

3. Using the crankshaft pulley bolt, turn the crankshaft clockwise and align the timing marks.

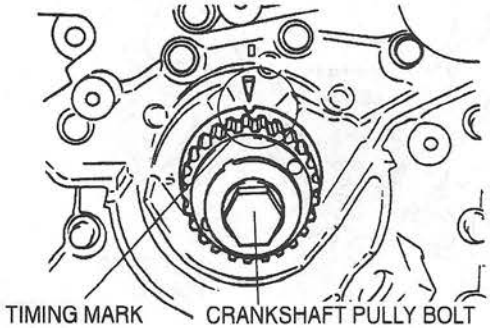

W6U110WCJ

4. With the No.1 idler pulley removed, install the timing belt on the pulleys in the order shown below.
   (1) Timing belt pulley
   (2) No.2 idler pulley
   (3) Camshaft pulley (LH)
   (4) Tensioner pulley
   (5) Camshaft pulley (RH)
5. Verify that there is tension between pulleys (3) and (1), and between pulleys (1) and (5).

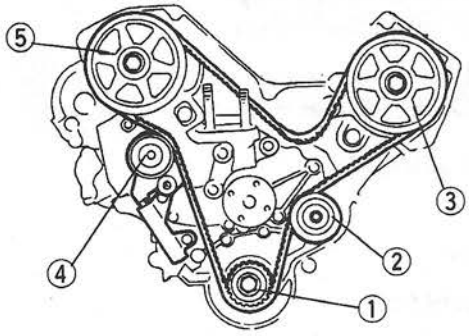

W6U110WCK

Caution
- **Verify that the belt has no looseness at the tension side.**
- **Do not damage the bolt threads when installing.**

6. Install the No.1 idler while applying the pressure on the timing belt.

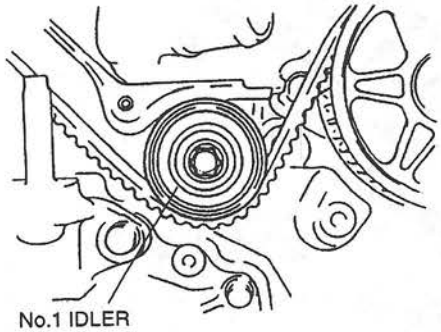
No.1 IDLER

W6U110WCL

7. Push the auto tensioner in the direction of the arrow and hand tighten the lower bolt. Tighten the bolts.

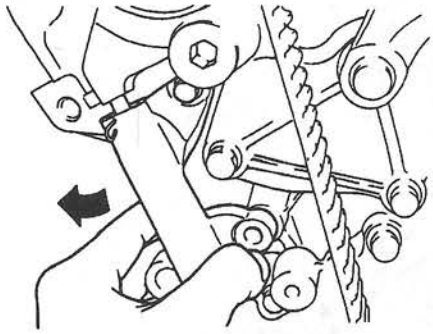
W6U110WCM

8. Remove the pin from the auto tensioner to apply tension to the belt.

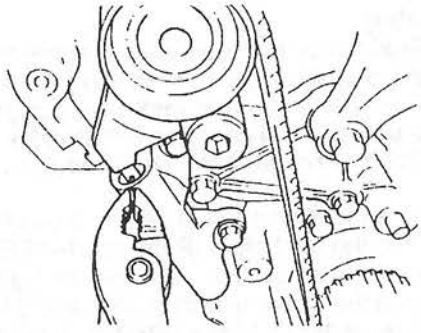
W6U110WCN

9. Turn the crankshaft clockwise twice, and align the timing marks.
10. Verify that all timing marks are correctly aligned. If not, remove the timing belt and repeat from **Timing Belt Auto Tensioner Installation Note**.

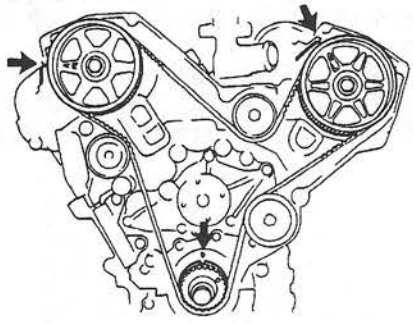
W6U110WCP

Crankshaft Pulley Installation Note
- Hold the crankshaft by using the **SST**.

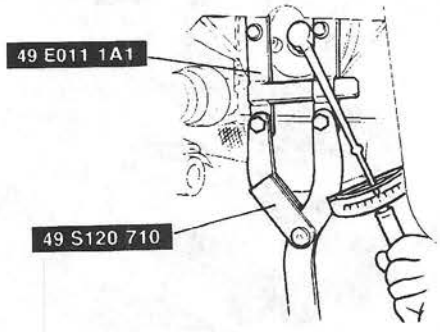

W6U110WCR

CYLINDER HEAD GASKET REPLACEMENT [KL]

W6U110W18

Warning

- **Fuel vapor is hazardous. It can very easily ignite, causing serious injury and damage. Always keep sparks and flames away from fuel.**
- **Fuel line spills and leaks are dangerous. Fuel can ignite and cause serious injuries or death and damage. Fuel can also irritate skin and eyes. To prevent this, always complete the "Fuel Line Safety Procedures". (Refer to 01–14 BEFORE REPAIR PROCEDURE.)**

1. Remove the timing belt. (Refer to 01–10B TIMING BELT REMOVAL/INSTALLATION [KL].)
2. Remove the front pipe. (Refer to 01–15 EXHAUST SYSTEM REMOVAL/INSTALLATION.)
3. Remove the air cleaner, high-tension lead, and ignition coil.
4. Remove the intake manifold. (Refer to 01–13B INTAKE-AIR SYSTEM REMOVAL/INSTALLATION [KL].)
5. Disconnect the fuel hose. (Refer to 01–14 BEFORE REPAIR PROCEDURE.) (Refer to 01–14 AFTER REPAIR PROCEDURE)
6. Drain the engine coolant. (Refer to 01–12 ENGINE COOLANT REPLACEMENT.)
7. Remove in the order indicated in the table.
8. Install in the reverse order of removal.
9. Verify the engine oil level. (Refer to 01–11 ENGINE OIL INSPECTION.)
10. Inspect for the engine oil, engine coolant, and fuel leakage.
11. Verify the compression. (Refer to 01–10B COMPRESSION INSPECTION [KL].)
12. Start the engine and
    (1) Inspect the pulleys and the drive belt for runout and contact.
    (2) Verify the ignition timing. (Refer to 01–10B ENGINE TUNE-UP [KL], Ignition Timing Adjustment.)
    (3) Verify the idle speed. (Refer to 01–10B ENGINE TUNE-UP [KL], Idle Speed Adjustment.)

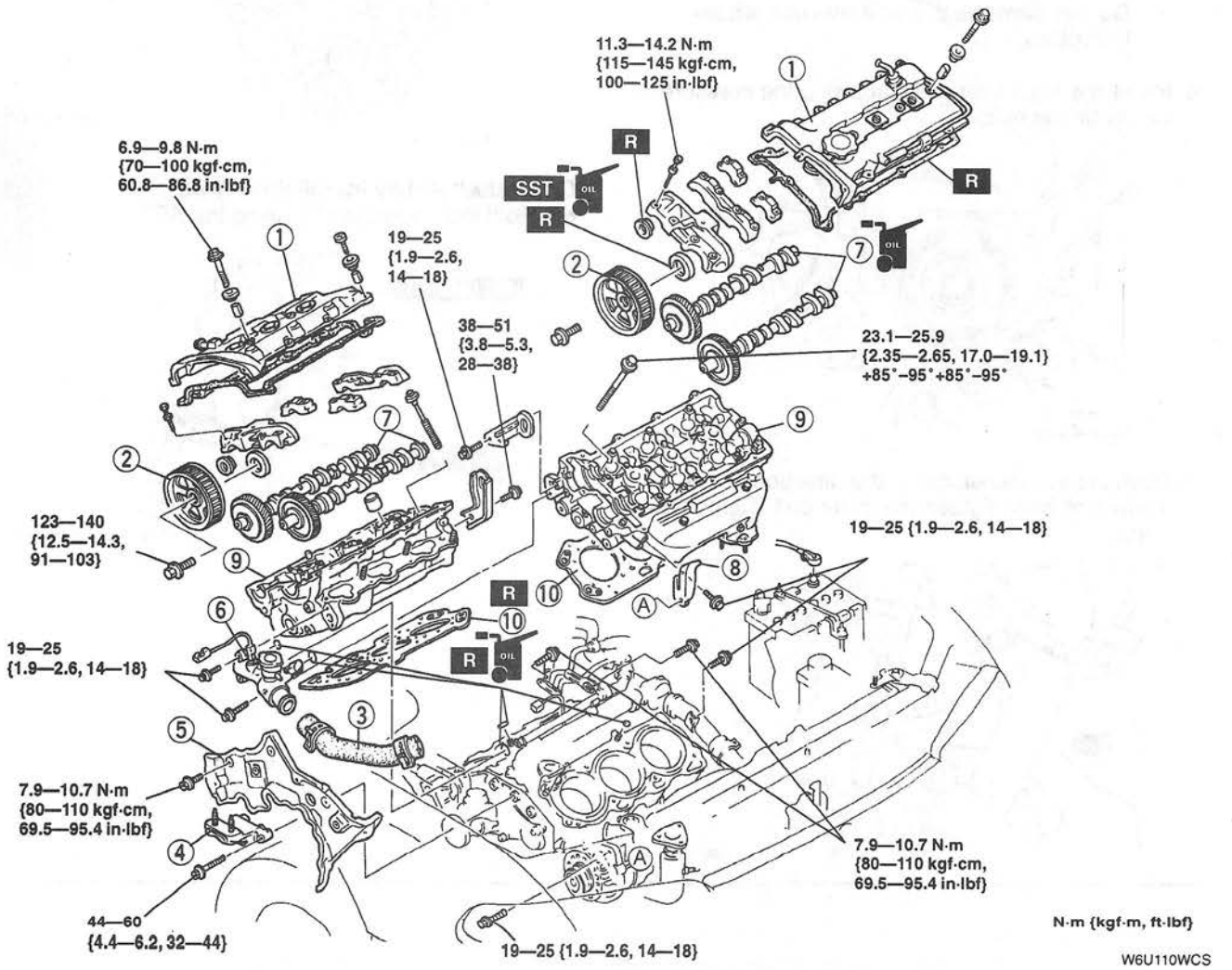

W6U110WCS

1	Cylinder head cover ☞ Installation Note
2	Camshaft pulley ☞ Removal Note ☞ Installation Note
3	Upper radiator hose
4	No.3 engine mount bracket
5	Seal plate
6	Water outlet
7	Camshaft ☞ Removal Note ☞ Installation Note
8	Generator stay
9	Cylinder head ☞ Removal Note ☞ Installation Note
10	Cylinder head gasket ☞ Installation Note

Camshaft Pulley Removal Note

- Hold the camshaft by using a wrench on the cast hexagon as shown, and loosen the camshaft pulley lock bolt.

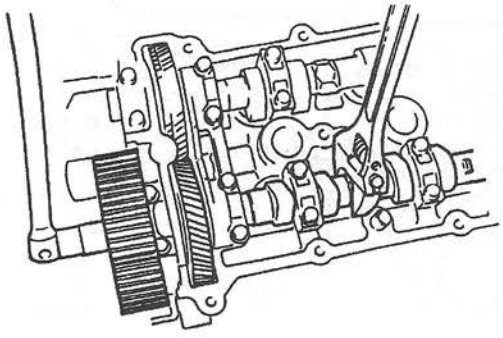

W6U110WCT

Camshaft Removal Note

Caution

- **When the camshaft lobe is pressing on the tappet, removing the camshaft cap can damage the cylinder head thrust journal support.**

1. Loosen the front camshaft cap bolts in two or three steps in the order shown.

Note

- Bolt No.5 in the figure fits only the right cylinder head.

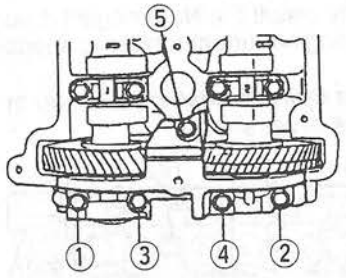

W6U110WCU

2. Remove the front camshaft cap bolts and the front camshaft caps.
3. Loosen the camshaft cap bolts gradually in two or three steps in the order shown.

Caution

- **Remove the thrust caps only after removing all camshaft caps. Otherwise, the thrust caps can be damaged.**

RH

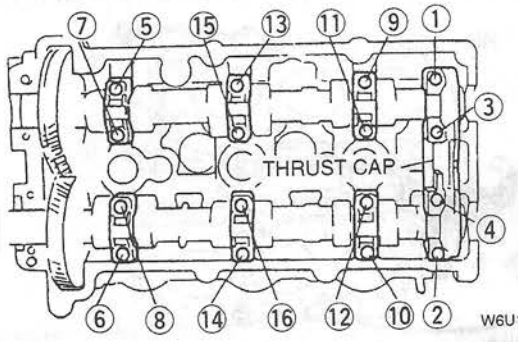

W6U110WCV

LH

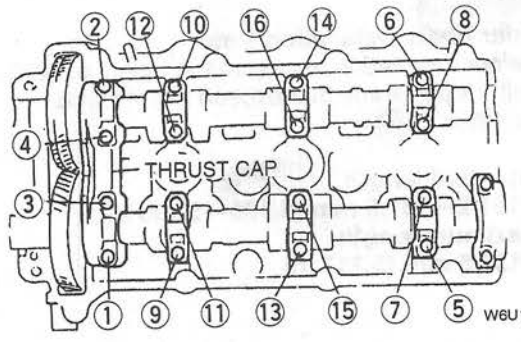

W6U110WCW

Cylinder Head Removal Note

1. Temporarily install the No.3 engine mount bracket and No.3 engine mount rubber to support the engine.
2. Loosen the cylinder head bolts in two or three steps in the order shown.

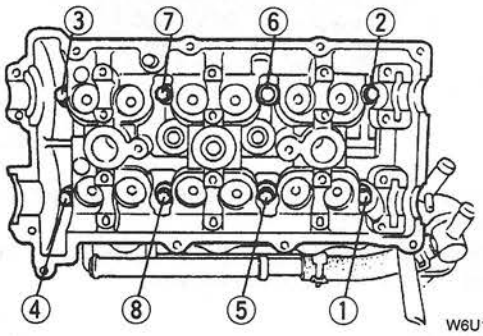

W6U110WCX

Cylinder Head Gasket Installation Note

- Install the new cylinder head gaskets on the cylinder block. (R mark for RH, L mark for LH)

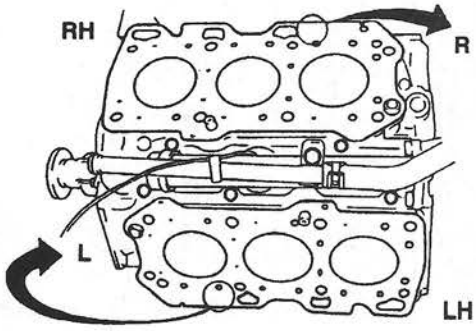

W6U110WCY

Cylinder Head Installation Note

1. Before installation, measure the length of each bolt. Replace any that exceed the maximum length.

Standard length
131.2—131.8 mm {5.166—5.188 in}
Maximum length
132.5 mm {5.217 in}

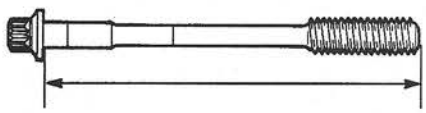
W6U110WCZ

2. Tighten the bolts in two or three steps in the order shown.

Tightening torque
23.1—25.9 N·m
{2.35—2.65 kgf·m, 17.0—19.1 ft·lbf}

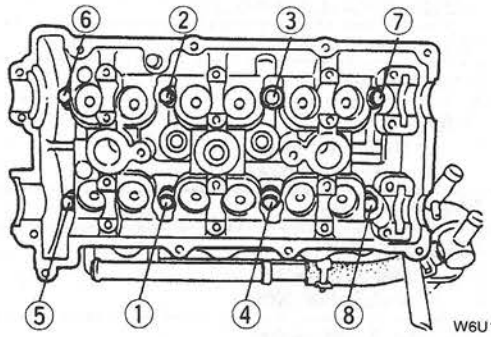

W6U110WD0

3. Put a paint mark on each bolt head.
4. Using the marks as a reference, tighten the bolts by turning each **85°—95°** in the sequence shown.
5. Further tighten each bolt by turning another **85°—95°** in the sequence shown.

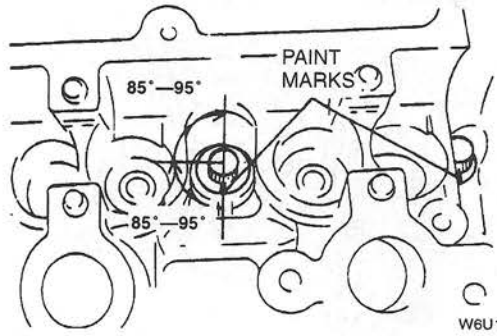

W6U110WD1

6. Support the engine by using the chain block.
7. Remove the No.3 engine mount rubber.

Camshaft Installation Note

1. Apply clean engine oil to the camshaft journals, camshaft lobes, and camshaft gears.
2. Install the camshafts so that the intake camshaft gear mark and exhaust camshaft gear mark align. Adjust the friction gear position with a screwdriver. (Intake side cam lobes of the No.1 cylinder (RH) and No.2 cylinder (LH) face straight up.)

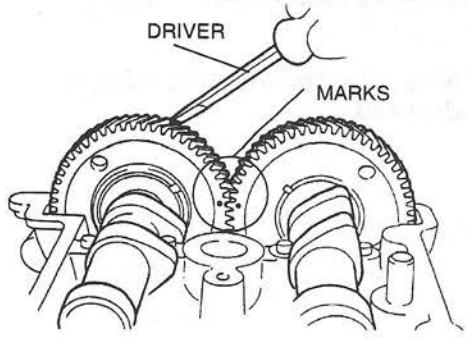

W6U110WD2

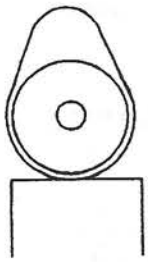

RH: No.1 CYLINDER (IN)
LH: No.2 CYLINDER (IN)

W6U110WD3

Caution
- **Install the thrust caps (RH is 4 mark, LH is B mark) first. Otherwise, camshaft can be broken or damaged.**

3. Install the thrust caps onto the cylinder head. Hand tighten the cap bolts gradually in two or three steps in the order shown, until the thrust caps are fully seated on the cylinder head.

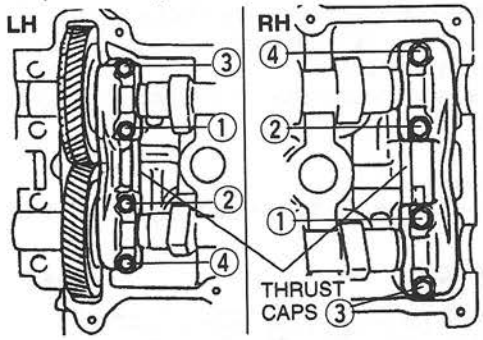

W6U110WD4

4. Apply silicone sealant to the shaded areas as shown.

Thickness
ϕ1.5—2.5 mm {0.060—0.098 in}

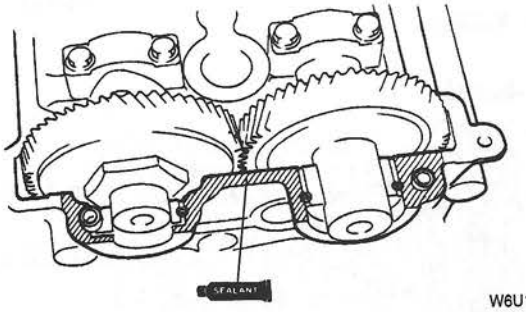

W6U110WD5

Caution
- **Because there is little camshaft thrust clearance, the camshaft must be held horizontally while it is installed. Otherwise, excessive force will be applied to the thrust area, causing burr on the thrust receiving area of the cylinder head journal. To avoid this, the following procedure must be observed.**

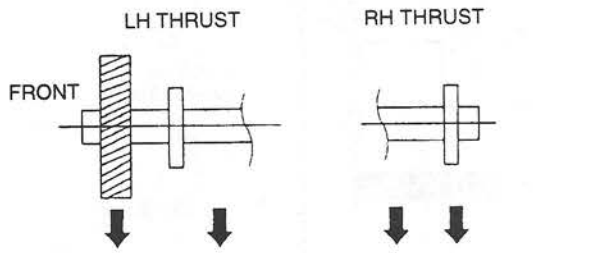

W6U110WD6

5. Install the camshaft caps according to their identification marks, and hand tighten the bolts.

Note
- RH: numbers
- LH: letters

6. Tighten the bolts in the order shown. Verify that the camshaft remains horizontal as the camshaft cap bolts tightened.

Tightening torque
11.3—14.2 N·m
{115—145 kgf·cm, 100—125 in·lbf}

7. Retighten the bolts in the order shown.

Tightening torque
11.3—14.2 N·m
{115—145 kgf·cm, 100—125 in·lbf}

RH

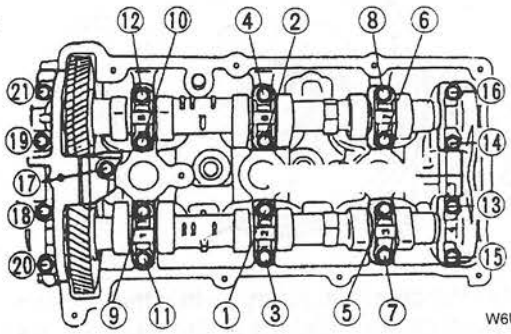

W6U110WD7

LH

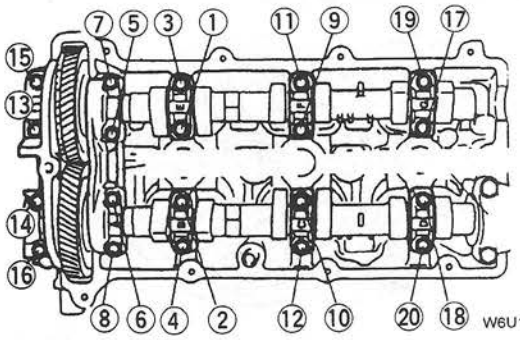

W6U110WD8

8. Apply clean engine oil to the lip of the new camshaft oil seal.
9. Push the oil seal slightly in by hand.
10. Tap the camshaft oil seal by using the **SST**.

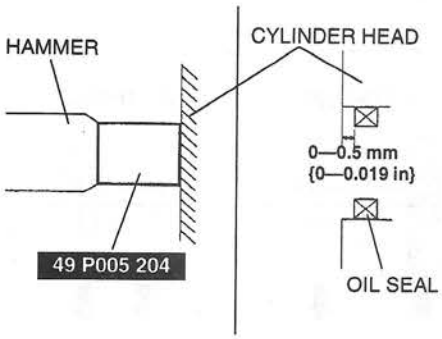

W6U110WD9

11. Tap in the new blind cap by using a plastic hammer.

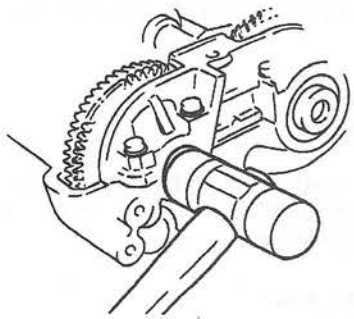
W6U110WDA

Camshaft Pulley Installation Note

1. Install the camshaft pulley so that the "R" mark (RH) can be seen and the timing mark aligns with the camshaft knock pin.

RH

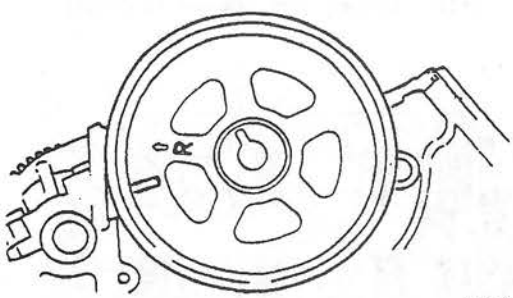

W6U110WDB

2. Install the camshaft pulley so that the "L" mark (LH) can be seen and the timing mark aligns with the camshaft knock pin.

LH

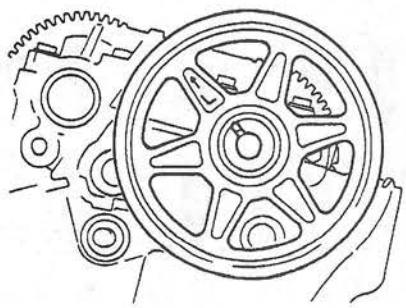
W6U110WDC

3. Hold the camshaft by using a wrench on the cast hexagon as shown, and tighten each bolt.

Tightening torque
123—140 N·m
{12.5—14.3 kgf·m, 91—103 ft·lbf}

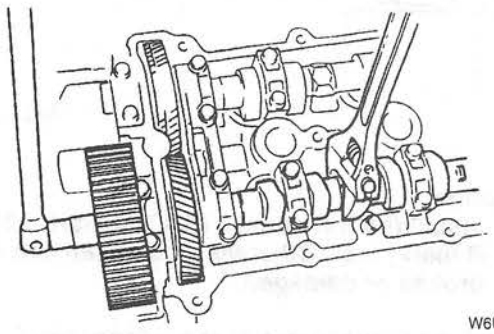
W6U110WDD

Cylinder Head Cover Installation Note

1. Verify that the grooves on the cylinder head cover are free of oil, water and other foreign material.
2. Install the new cylinder head cover gasket into the cylinder head cover.
3. Apply silicone sealant to the shaded areas as shown.

Thickness
ϕ1.5—2.5 mm {0.060—0.098 in}

RH

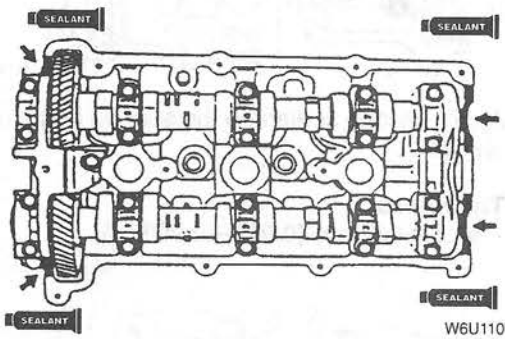

W6U110WDF

LH

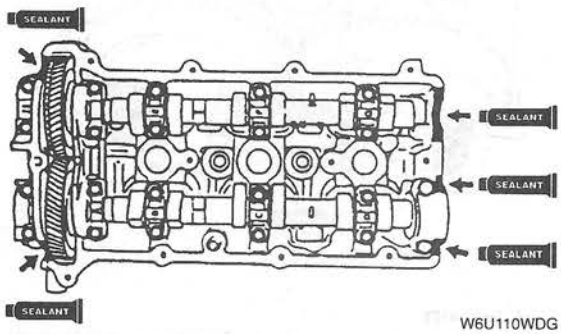

W6U110WDG

4. Install the cylinder head cover and tighten the bolts gradually in two or three steps in the order shown.

5. Retighten cylinder head cover bolts RH No.5 and 6, LH No.6 and 7.

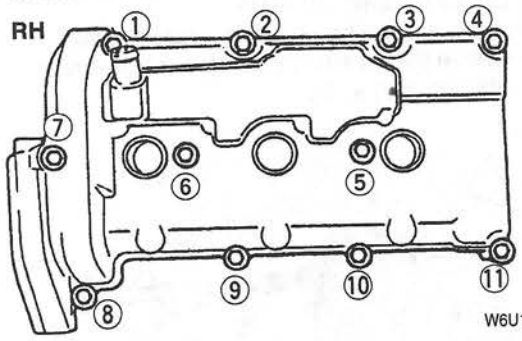

W6U110WDH

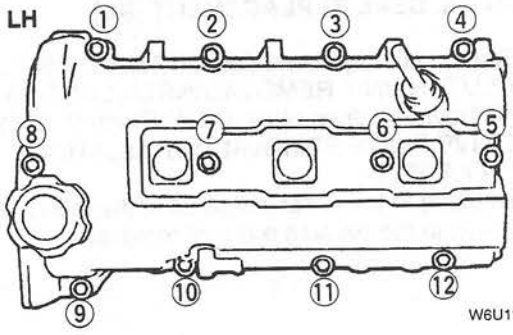

W6U110WDJ

FRONT OIL SEAL REPLACEMENT [KL]

W6U110W19

1. Remove the timing belt. (Refer to 01–10B TIMING BELT REMOVAL/INSTALLATION.)
2. Remove in the order indicated in the table.
3. Install in the reverse order of removal.

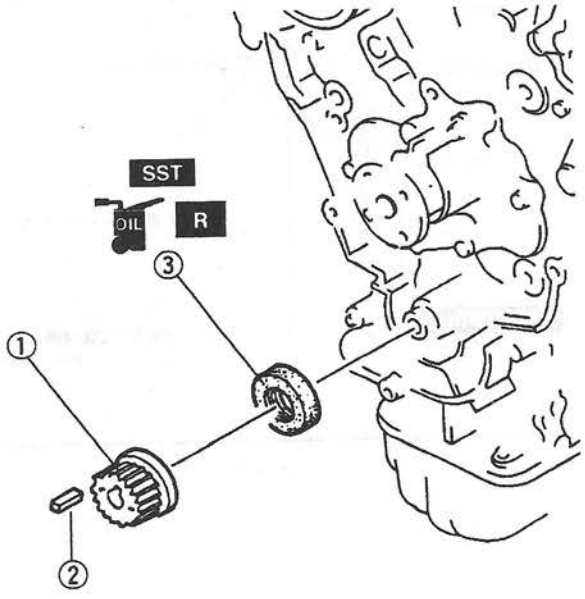

W6U110WDK

1	Timing belt pulley
2	Key
3	Front oil seal ☞ Removal Note ☞ Installation Note

Front Oil Seal Removal Note

1. Cut the oil seal lip by using a razor knife.
2. Remove the oil seal by using a screwdriver protected with a rag.

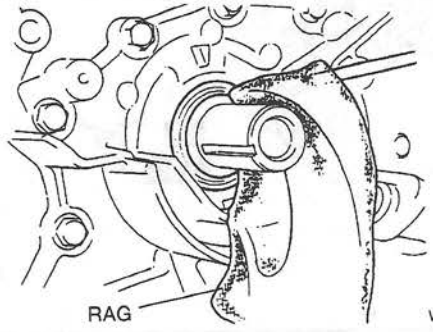

W6U110WDL

Front Oil Seal Installation Note

1. Apply clean engine oil to the oil seal lip.
2. Push the oil seal slightly in by hand.
3. Tap the oil seal in evenly by using the **SST** and a hammer.

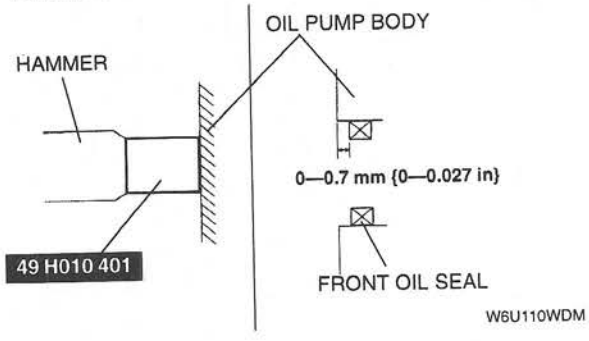

W6U110WDM

REAR OIL SEAL REPLACEMENT [KL]

W6U110W20

1. Remove the flywheel. (MTX) (Refer to 05–10 CLUTCH UNIT REMOVAL/INSTALLATION.)
2. Remove the drive plate. (ATX) (Refer to 05–17B DRIVE PLATE REMOVAL/INSTALLATION [GF4A-EL].)
3. Remove in the order indicated in the table.
4. Install in the reverse order of removal.

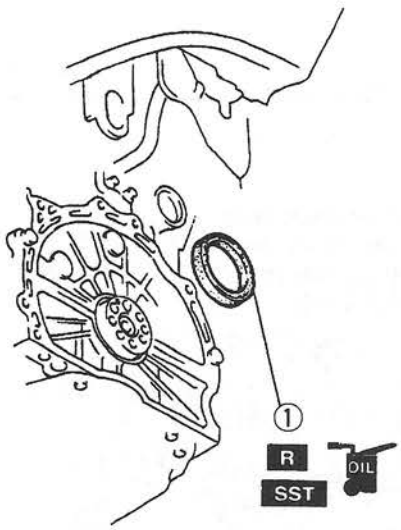

W6U110WDN

1	Rear oil seal ☞ Removal Note ☞ Installation Note

Rear Oil Seal Removal Note

1. Cut the oil seal lip by using a razor knife.
2. Remove the oil seal by using a screwdriver protected with a rag.

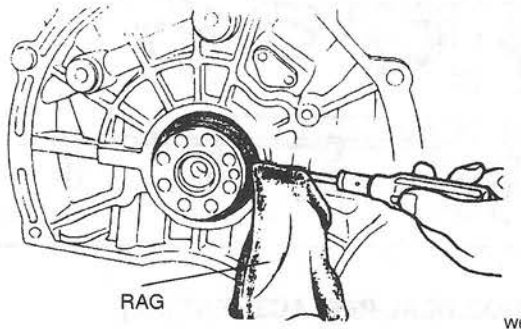

W6U110WDP

Rear Oil Seal Installation Note

1. Apply clean engine oil to the new oil seal lip.
2. Push the oil seal slightly in by hand.
3. Tap the oil seal in evenly by using the **SST** and a hammer.

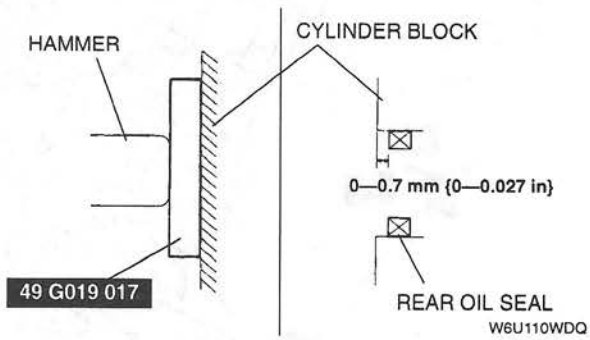

W6U110WDQ

ENGINE REMOVAL/INSTALLATION [KL]

W6U110W21

Warning

- **Fuel vapor is hazardous. It can very easily ignite, causing serious injury and damage. Always keep sparks and flames away from fuel.**
- **Fuel line spills and leaks are dangerous. Fuel can ignite and cause serious injuries or death and damage. Fuel can also irritate skin and eyes. To prevent this, always complete the "Fuel Line Safety Procedures". (Refer to 01–14 BEFORE REPAIR PROCEDURE.)**

1. Disconnect the negative battery cable.
2. Remove the radiator. (Refer to 01–12 RADIATOR REMOVAL/INSTALLATION.)
3. Remove the air cleaner.
4. Remove the accelerator cable. (Refer to 01–13B ACCELERATOR CABLE INSPECTION/ADJUSTMENT [KL].)
5. Disconnect the fuel hose. (Refer to 01–14 BEFORE REPAIR PROCEDURE.) (Refer to 01–14 AFTER REPAIR PROCEDURE.)
6. Remove the front pipe. (Refer to 01–15 EXHAUST SYSTEM REMOVAL/INSTALLATION.)
7. Remove the rods, cables and pipes related to the transaxle.
8. Remove the battery.
9. Remove the P/S oil pump with the oil hose still connected. Position the P/S oil pump so that it is out of the way.
10. Remove the A/C compressor with the pipe still connected. Position the A/C compressor so that it is out of the way.
11. Remove the cruise actuator. (Refer to 01–20 CRUISE ACTUATOR REMOVAL/INSTALLATION.)
12. Remove the drive shaft. (Refer to 03–13 DRIVE SHAFT REMOVAL/INSTALLATION.)
13. Remove in the order indicated in the table.
14. Install in the reverse order of removal.
15. Start the engine and
    (1) Inspect for the engine oil, engine coolant, transaxle oil and fuel leakage.
    (2) Verify the ignition timing, idle speed and idle mixture. (Refer to 01–10B ENGINE TUNE-UP [KL], Ignition Timing Adjustment, Idle Speed Adjustment, Idle Mixture Inspection.)
16. Perform a road test.

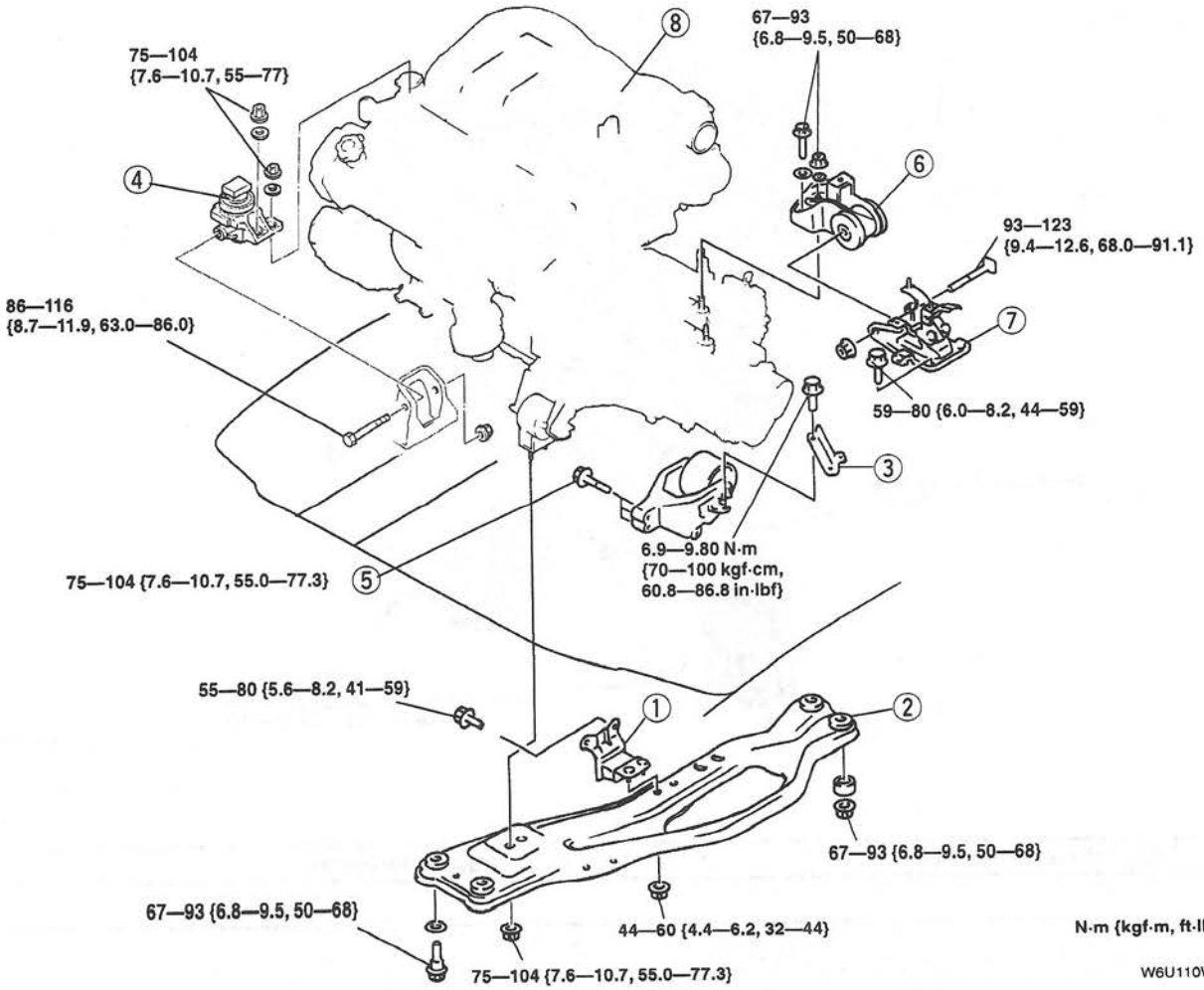

1	No.5 engine mount rubber
2	Engine mount member
3	No.1 engine mount stay bracket
4	No.3 engine mount rubber
5	No.1 engine mount bolt and nut
6	No.4 engine mount rubber
7	No.4 engine mount bracket ☞ Installation Note
8	Engine, transaxle

No.4 Engine Mount Bracket Installation Note

- Tighten the bolt in the order shown.

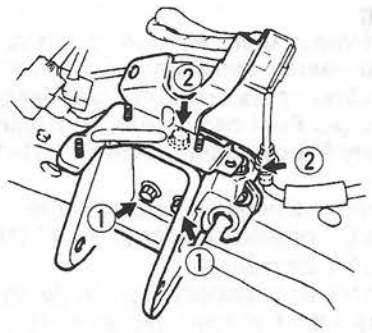

W6U110WDS

ENGINE DISASSEMBLY/ASSEMBLY [KL]

W6U110W22

1. Disconnect the engine and transaxle. (Refer to 05–15 TRANSAXLE REMOVAL/INSTALLATION.) (Refer to 05–17B TRANSAXLE REMOVAL/INSTALLATION [GF4A-EL].)
2. Remove the intake-air system.
3. Remove the exhaust system.
4. Remove the oil filter. (Refer to 01–11 OIL FILTER, Oil Filter Replacement.)
5. Remove the ignition coil.
6. Remove the generator.
7. Disassemble in the order indicated in the table.
8. Assemble in the reverse order of disassembly.

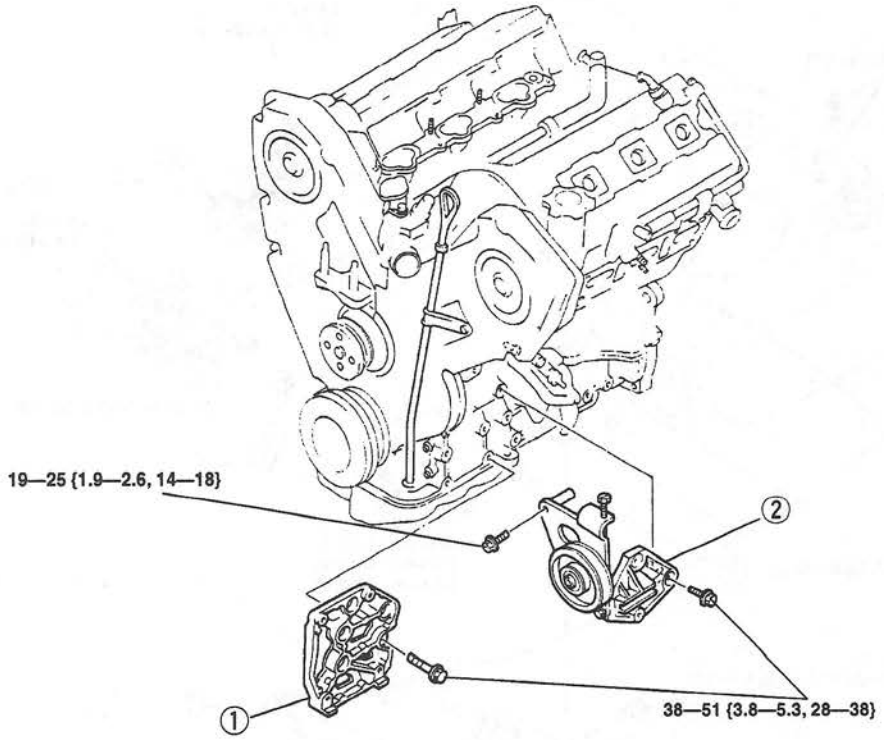

N·m {kgf·m, ft·lbf}

W6U110WDT

1	A/C compressor bracket
2	Generator bracket

ENGINE TUNE-UP [KL]

W6U110W23

Engine Tune-up Preparation

1. Warm up the engine to the normal operating temperature.
2. Shift transaxle into Neutral (MTX) or P position (ATX).
3. Turn off all electrical loads.
   - Headlight
   - Blower
   - Rear window defroster
   - Power steering
4. Verify that the battery is fully charged. (Refer to 01–17 BATTERY INSPECTION.)
5. Connect the **SSTs** (NGS tester) to the data link connector and select the "PID/DATA MONITOR AND RECORD" function and press TRIGGER.

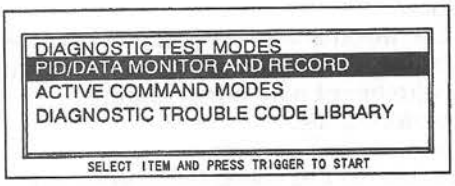

W6U110WDU

6. Select "RPM" and press TRIGGER.
7. Wait until the electrical fan stops.
8. Select "START" to begin.

Ignition Timing Inspection

1. Perform "Engine Tune-up Preparation".
2. Verify that the idle speed is within the specification.

   Specification
   550—750 (650 ± 100) rpm

3. If not as specified, adjust the idle speed. (Refer to Idle Speed Adjustment.)
4. Connect a timing light to the high-tension lead of the No.1 cylinder.
5. Verify that the timing mark (yellow) is within the specification.

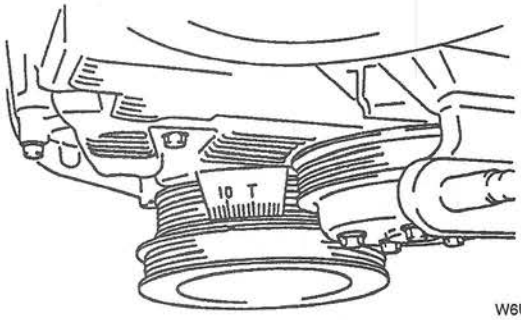

W6U110WDV

   Specification
   BTDC 4—16° (10° ± 6°)/550—750 rpm

6. If not as specified, inspect the following.
   - Camshaft position sensor
   - Crankshaft position sensor
   - Throttle position sensor
   - Engine coolant temperature sensor
   - Neutral switch (MTX)
   - Clutch switch (MTX)
   - Transaxle range switch (ATX)
7. If the devices are normal, replace the PCM.

Idle Speed Adjustment

1. Warm up the engine to normal operating temperature.
2. Shift the transaxle into Neutral (MTX) or P position (ATX).
3. Turn off all loads.
   - Blower motor
   - Power steering
   - Electrical loads. (i.g, headlight, rear window defroster)
4. Verify that the battery is fully charged. (Refer to 01–17 BATTERY INSPECTION.)
5. Connect the **SSTs** (NGS tester) to data link connector.
6. Select the "DIAGNOSTIC DATA LINK" and press the TRIGGER.

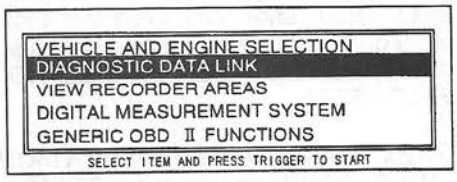

W6U110WY0

7. Select the "PCM-POWERTRAIN CONTROL MODULE" and press the TRIGGER.

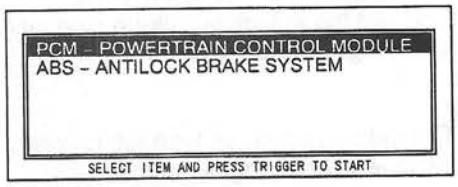

W6U110WY1

8. Select "PID/DATA MONITOR AND RECORD" and press the TRIGGER.

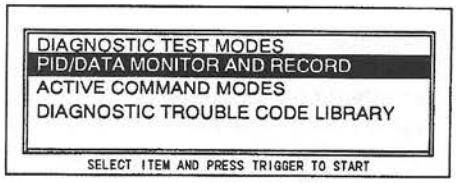

W6U110WY3

9. Select the "RPM" and press the TRIGGER.
10. Wait until the electrical fans stop.
11. Verify that the idle speed is within specifications.

Specification
550—750 (650 ± 100) rpm

12. If not within specifications, adjust the idle speed as follows.

Caution
- **The air adjusting screw (AAS) must not be adjusted, when the headlight HIGH system is malfunctioning. Any improper adjustment may affect engine performance.**

Note
- In order to activate the "KOER ON-DEMAND SELF-TEST" after completion of the following procedure, turn off the ignition switch at once, then operate the "KOER ON-DEMAND SELF-TEST".

(1) Select "HDLMP" in the "PID/DATA MONITOR AND RECORD" and press the TRIGGER.
(2) Verify that the "HDLMP" status changes from OFF to ON when the headlight switch is turned to the passing position. If it does not change, inspect following harnesses, connectors and terminals of the headlight signal circuit.
- From battery to combination switch
- From combination switch to PCM

(3) Connect the inductive pick-up type tachometer to the high tension lead.

Note
- The inductive pick-up type tachometer may indicate double engine speed.

(4) Select the "DIAGNOSTIC TEST MODES" and press the TRIGGER.
(5) Select the "KOER ON-DEMAND SELF-TEST" and press the TRIGGER.

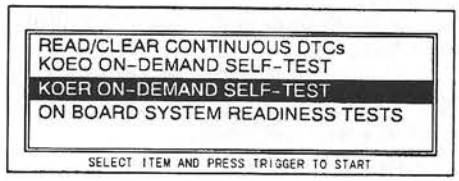

W6U110WY2

(6) Turn the headlight switch to the passing position more than three times while each "passing" for 2 seconds after the "FOR EXAMPLE BOO, PSP AND TCS" is displayed.
(7) Make sure the engine speed is fixed.

Caution
- **The throttle adjusting screw is set at the factory and must not be adjusted. Any adjustment may affect engine performance.**

(8) Adjust the idle speed to the following specifications by turning the air adjusting screw within 2 minutes after the headlight switch is turned to passing position more than three times.

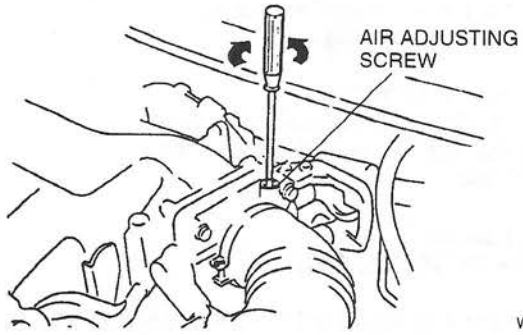

W6U110WDW

Specification
550—750 (650 ± 100) rpm

Idle-up Speed Inspection

1. Perform "Engine Tune-up Preparation".
2. Verify that the idle speed is normal.
3. Verify that the idle-up speed is within the specification.

Load condition	Idle-up speed (rpm)*1		
	MTX	ATX	
		N, P position	D range
E/L ON*2	550—750	550—750	525—725
A/C ON*3	725—925	725—925	700—900
P/S ON*4	550—750	550—750	525—725

*1 : Excludes temporary idle speed drop just after the electrical loads (E/L) are turned on.

*2 : Headlight is on, Fan switch (3rd or higher), Cooling fan are operating.

*3 : A/C switch and fan switch are on.

*4 : Steering wheel is fully turned.

4. If not as specified with all loads conditions, check the idle air control valve.
5. If not as specified with some load conditions, check related input switches, harnesses and connectors.

Idle Mixture Inspection

1. Perform "Engine Tune-up Preparation".
2. Verify that the idle speed and ignition timing are within the specification.
3. Insert an exhaust gas analyzer to the tailpipe.
4. Verify that the CO and HC concentrations are within the regulation.
5. If not, inspect the following.
   - On-board diagnostic system
   - Heated oxygen sensor (Front, Middle, Rear)
   - Intake manifold vacuum
   - Fuel line pressure
   - Ignition timing control
6. If the systems are normal, replace the three way catalytic converter.

01–11 LUBRICATION SYSTEM

ENGINE OIL LEVEL INSPECTION 01–11–1
ENGINE OIL REPLACEMENT 01–11–1
OIL FILTER REPLACEMENT 01–11–1
OIL PRESSURE INSPECTION 01–11–2
OIL PAN REMOVAL/INSTALLATION ... 01–11–3
Oil Pan Removal Note 01–11–3
Oil Pan Installation Note 01–11–3

ENGINE OIL LEVEL INSPECTION

W6U111W01

1. Position the vehicle on level ground.
2. Warm up the engine to normal operating temperature and stop it.
3. Wait for five minutes.
4. Remove the dipstick and inspect oil level and condition. Verify that the oil level is within the F and L marks on the dipstick.
5. Add or replace oil as necessary.

ENGINE OIL REPLACEMENT

W6U111W02

Warning

- **When the engine and the engine oil are hot, they can badly burn. Don't burn yourself with either.**
- **A vehicle that is lifted but not securely supported on safety stands is dangerous. It can slip or fall, causing death or serious injury. Never work around or under a lifted vehicle if it is not securely supported on safety stands.**
- **Continuous exposure with USED engine oil has caused skin cancer in laboratory mice. Protect your skin by washing with soap and water immediately after this work.**

1. Position the vehicle on level ground.
2. Remove the oil filler cap and the oil pan drain plug.
3. Drain the oil into a container.
4. Install the drain plug.

Tightening torque
30—41 N·m {3.0—4.2 kgf·m, 22—30 ft·lbf}

5. Refill the engine with the specified type and amount of engine oil.
6. Refit the oil filler cap.
7. Run the engine and inspect for oil leakage.
8. Inspect the oil level and add oil as necessary. (Refer to 01–11 ENGINE OIL LEVEL INSPECTION.)

Note

- The actual oil level may vary from the specified capacity in some cases.

Oil capacity

L {US qt, Imp qt}

Item	Engine	
	FS	KL
Oil replacement	3.3 {3.5, 2.9}	3.7 {3.9, 3.3}
Oil and oil filter replacement	3.5 {3.7, 3.1}	4.0 {4.2, 3.5}
Total (dry engine)	3.7 {3.9, 3.3}	4.9 {5.2, 4.3}

Engine oil grade
API Service
SG (Energy Conserving II), SH (Energy Conserving II), SJ or ILSAC (GF-I, GF-II)
Engine oil viscosity
Above –25 °C {–13 °F}: SAE 10W–30
Below 0 °C {32 °F}: SAE 5W–30

OIL FILTER REPLACEMENT

W6U111W03

1. Remove the oil filter by using the **SST**.

FS

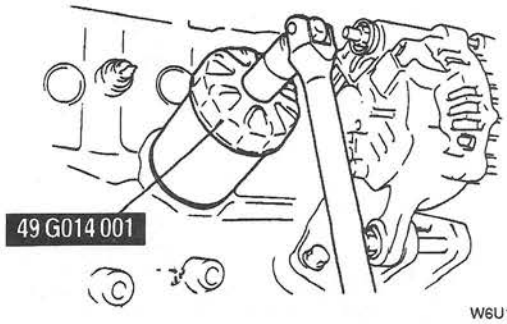

W6U111WA0

KL

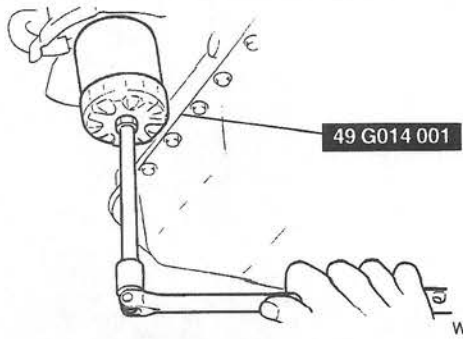

W6U111WA1

2. Use a clean rag to wipe off the mounting surface on the oil filter body.
3. Apply clean engine oil to the O-ring of the oil filter.
4. Tighten the filter according to the installation direction on the side of it or packing box by using the **SST**.
5. Start the engine and inspect for oil leakage.
6. Inspect the oil level and add oil as necessary. (Refer to 01–11 ENGINE OIL LEVEL INSPECTION.)

OIL PRESSURE INSPECTION

W6U111W04

Warning
- **Continuous exposure with USED engine oil has caused skin cancer in laboratory mice. Protect your skin by washing with soap and water immediately after this work.**
- **When the engine and the oil are hot, they can badly burn. Turn off the engine and wait until they are cool.**

1. Remove the intake manifold bracket. (FS)
2. Remove the oil pressure switch.
3. Screw the **SST** into the oil pressure switch installation hole.

FS

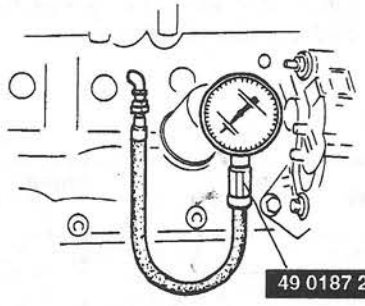

W6U111WA2

KL



W6U111WA3

4. Warm up the engine to normal operating temperature.
5. Run the engine at the specified speed, and note the gauge readings.

Note
- The oil pressure can vary with oil viscosity and temperature.

Oil pressure
FS: 393—490 kPa
{4.0—5.0 kgf/cm^2, 57—71 psi} [3,000 rpm]
KL: 334—490 kPa
{3.4—5.0 kgf/cm^2, 49—71 psi} [3,000 rpm]

6. If the pressure is not as specified, inspect for amount of engine oil, oil leakage, or any wear parts inside of engine etc. Repair or replace as necessary.
7. Stop the engine and wait until it is cool.
8. Apply silicone sealant to the oil pressure switch threads as shown.
9. Remove the **SST**.

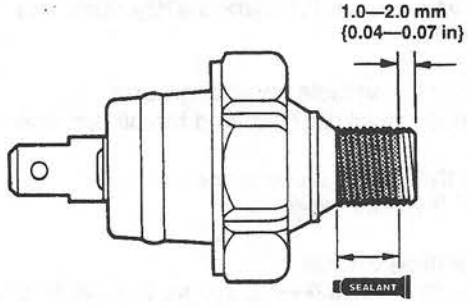

W6U111WA4

10. Install the oil pressure switch.

Tightening torque
12—17 N·m {1.2—1.8 kgf·m, 9—13 ft·lbf}

11. Start the engine and inspect for oil leakage.
12. Install the intake manifold bracket. (FS)

OIL PAN REMOVAL/INSTALLATION

W6U111W05

1. Disconnect the negative battery cable.
2. Drain the engine oil. (Refer to 01–11 ENGINE OIL REPLACEMENT.)
3. Remove the front pipe. (Refer to 01–13A EXHAUST SYSTEM REMOVAL/INSTALLATION [FS].) (Refer to 01–13B EXHAUST SYSTEM REMOVAL/INSTALLATION [KL].)
4. Remove in the order indicated in the table.
5. Install in the reverse order of removal.

FS

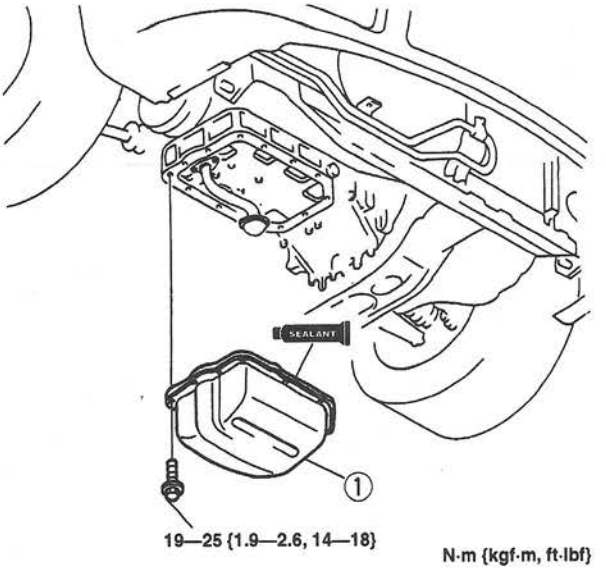

W6U111WA5

KL

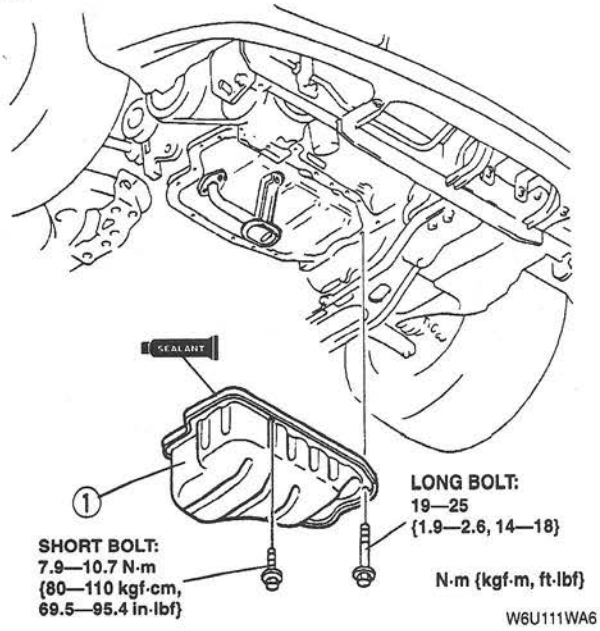

W6U111WA6

1	Oil pan ☞ Removal Note ☞ Installation Note

Oil Pan Removal Note

Caution

- **Pry tools can easily scratch the oil pan mounting surfaces. Prying off the oil pan can also easily bend the oil pan flange. Refer to the following instructions before removing the oil pan.**

1. Screw a oil pan bolt in a weld nut hole to make a small gap between the oil pan upper block and the oil pan (FS).

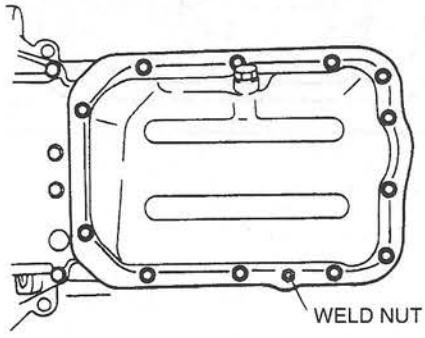

W6U111WA7

2. Insert a screwdriver or a separator tool between the oil pan upper block (FS) or lower cylinder block (KL) and the oil pan.

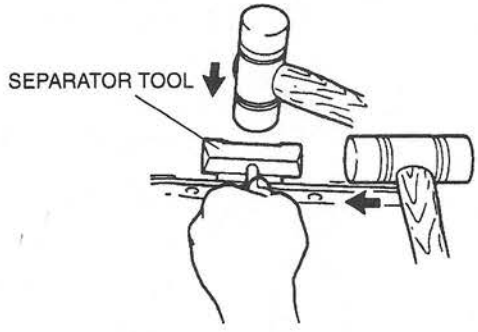

W6U111WA8

Oil Pan Installation Note

Caution

- **If the bolts are reused, remove the old sealant from the bolt threads. Tightening a bolt that has old sealant on it can cause thread damage.**

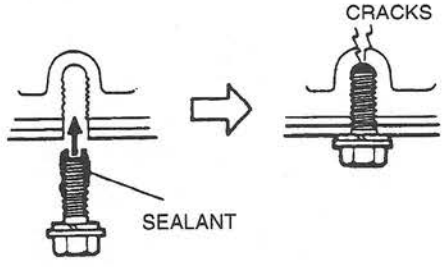

W6U111WA9

- Apply silicone sealant to the oil pan along the inside of the bolt holes and overlap the ends.

Thickness
ϕ2.0—3.0 mm {0.079—0.118 in}

FS

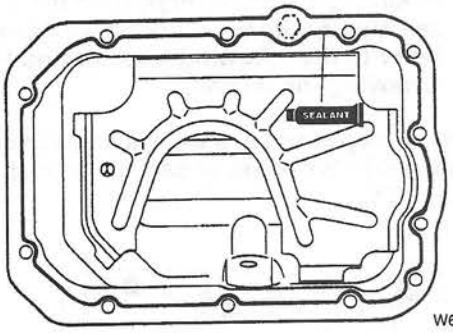

W6U111WAA

KL

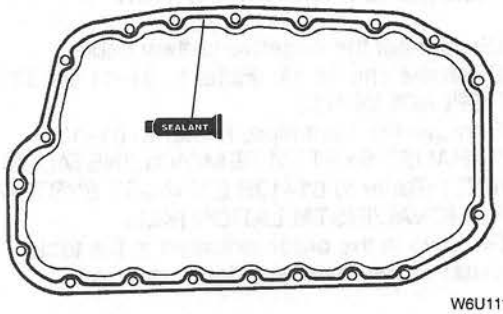

W6U111WAB

01–12 COOLING SYSTEM

COOLING SYSTEM SERVICE WARNINGS 01–12–1
ENGINE COOLANT LEVEL INSPECTION 01–12–1
ENGINE COOLANT REPLACEMENT .. 01–12–2
ENGINE COOLANT LEAKAGE INSPECTION 01–12–3
RADIATOR CAP INSPECTION 01–12–3
RADIATOR REMOVAL/INSTALLATION 01–12–4
Cooling Fan Component Installation Note 01–12–4
THERMOSTAT REMOVAL/INSTALLATION 01–12–5
Thermostat Installation Note 01–12–5
THERMOSTAT INSPECTION 01–12–6
WATER PUMP REMOVAL/INSTALLATION 01–12–6
COOLING FAN MOTOR INSPECTION . 01–12–7
COOLING FAN MOTOR REMOVAL/INSTALLATION 01–12–7
COOLING FAN RELAY INSPECTION .. 01–12–8

COOLING SYSTEM SERVICE WARNINGS

W6U112W01

Warning

- **Removing the radiator cap or loosening the radiator drain plug while the engine is running, or when the engine and radiator are hot is dangerous. Scalding coolant and steam may shoot out and cause serious injury. It may also damage the engine and cooling system.**
- **Turn off the engine and wait until it is cool. Even then, be very careful when removing the cap. Wrap a thick cloth around it and slowly turn it counterclockwise to the first stop. Step back while the pressure escapes. When you're sure all the pressure is gone, press down on the cap—still using a cloth—turn it, and remove it.**
- **When the engine and the engine coolant are hot, they can badly burn. Turn off the engine and wait until they are cool before draining the engine coolant.**

ENGINE COOLANT LEVEL INSPECTION

1. Remove the radiator cap (FS) or coolant filler cap (KL).
2. Verify that the coolant level is near the bottom line of the radiator filler neck (FS) or coolant filler neck (KL).
3. Verify that the coolant level on the coolant reservoir is between the F and L marks.
4. Add coolant as necessary.

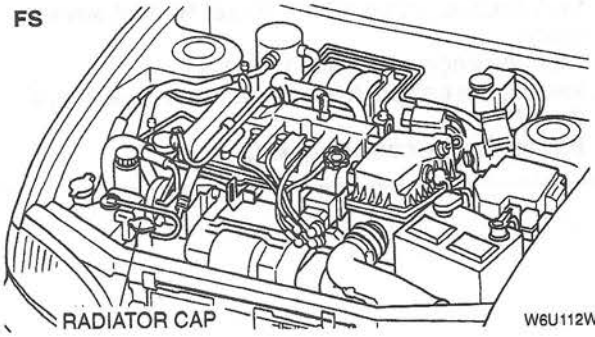

W6U112WAF

W6U112W02

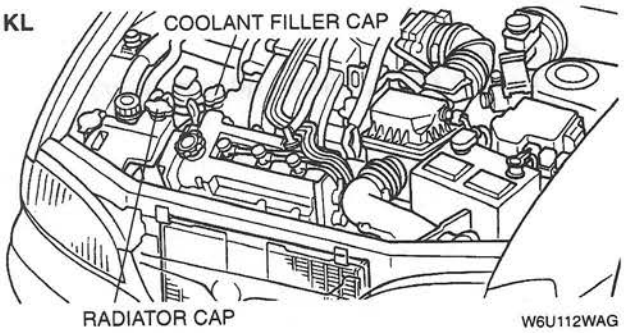

W6U112WAG

ENGINE COOLANT REPLACEMENT

1. Drain the coolant in the coolant reservoir.
2. Remove the radiator cap and the coolant filler cap (KL) and loosen the radiator drain plug.

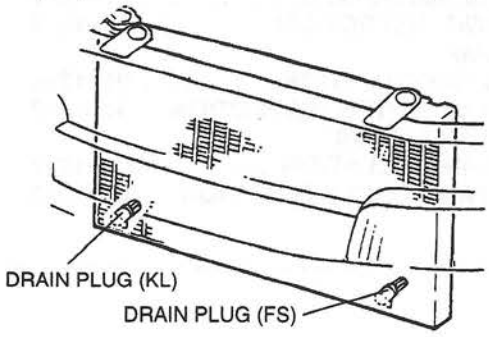

W6U112WA0

3. Drain the coolant into a container.
4. Flush the cooling system with water until all traces of color are gone.
5. Leave the system until drain completely.
6. Tighten the radiator drain plug.

Caution

- **The engine has aluminum parts that can be damaged by alcohol or methanol antifreeze. Do not use alcohol or methanol in the cooling system. Use only ethylene-glycol-based coolant.**
- **Use only soft (demineralized) water in the coolant mixture. Water that contains minerals will cut down on the coolant's effectiveness.**

7. Referring to the following graph and chart, select proper gravity of the coolant. Slowly pour the coolant into the radiator up to the coolant filler port (FS) or into the engine up to the coolant filler port (KL).

Filling pace
1.0 L {1.1 US qt, 0.9 Imp qt}/min. [max]

W6U112W03

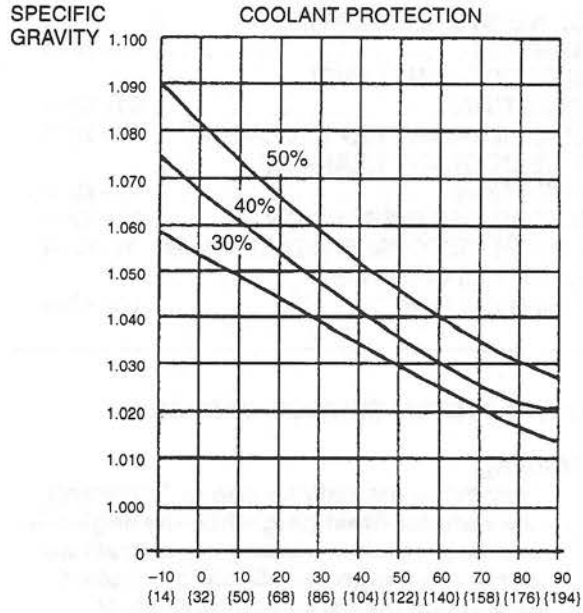

W6U112WA1

Antifreeze solution mixture percentage

Coolant protection	Volume percentage		Gravity at 20 °C {68°F}
	Water	Coolant	
Above –16 °C {3 °F}	65	35	1.054
Above –26 °C {–15 °F}	55	45	1.066
Above –40 °C {–40 °F}	45	55	1.078

8. Fill the coolant into the reservoir up to the F mark on the coolant reservoir.
9. Fully install the radiator cap and the coolant filler cap (KL).
10. Start the engine and let it idle for approx. 10 minutes. If the coolant temperature becomes too high, stop the engine to prevent it from overheating.
11. After engine warms up, run it at approx. 2,500 rpm for 5 minutes.
12. Increase the engine speed to approx. 3,000 rpm for 5 seconds, then return to idle. Repeat several times.
13. Stop the engine and wait until it is cool.
14. Inspect the coolant level. If it is low, repeat steps 7—12.
15. Inspect for the coolant leakage.

ENGINE COOLANT LEAKAGE INSPECTION

W6U112W04

1. Inspect the coolant level. (Refer to 01–12 ENGINE COOLANT LEVEL INSPECTION.)
2. Remove the radiator cap.
3. Connect a radiator cap tester and the **SST** to the radiator filler neck (FS) or reservoir filler neck (KL).

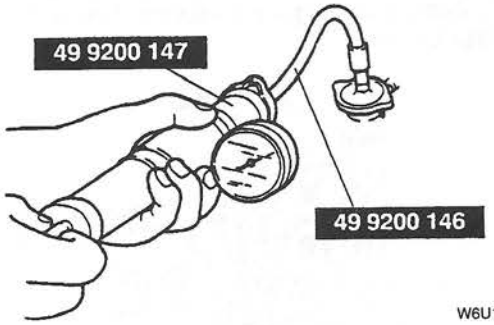

W6U112WA2

Caution

- **Applying more than 123 kPa {1.25 kgf/cm^2, 17.8 psi} can damage the hoses, fittings, and other components, and cause leaks.**

4. Apply pressure to the radiator.

   Pressure
   123 kPa {1.25 kgf/cm^2, 17.8 psi}

5. Verify that the pressure is held. If not, inspect the system for coolant leakage.

RADIATOR CAP INSPECTION

W6U112W05

1. Attach the radiator cap to a radiator cap tester with the **SST**. Apply pressure gradually.

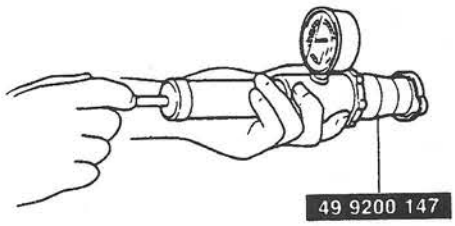

W6U112WA3

2. Verify that the pressure becomes stable within the specification.

   Pressure
   94—122 kPa
   {0.95—1.25 kgf/cm^2, 13.5—17.7 psi}

3. If the pressure is held for 10 seconds, the radiator cap is normal.

RADIATOR REMOVAL/INSTALLATION

W6U112W06

1. Disconnect the negative battery cable.
2. Drain the engine coolant. (Refer to 01–12 ENGINE COOLANT REPLACEMENT.)
3. Remove the fresh air duct.
4. Remove the condenser fan.
5. Remove the oil pipe. (FS: ATX)
6. Remove in the order indicated in the table.
7. Install in the reverse order of removal.

1	Cooling fan component ☞ Installation Note
2	Radiator

Cooling Fan Component Installation Note

- Tighten the cooling fan component bolts in the order shown.

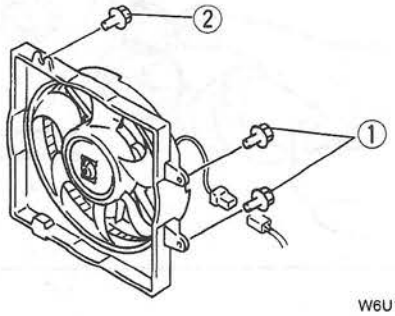

W6U112WA6

FS

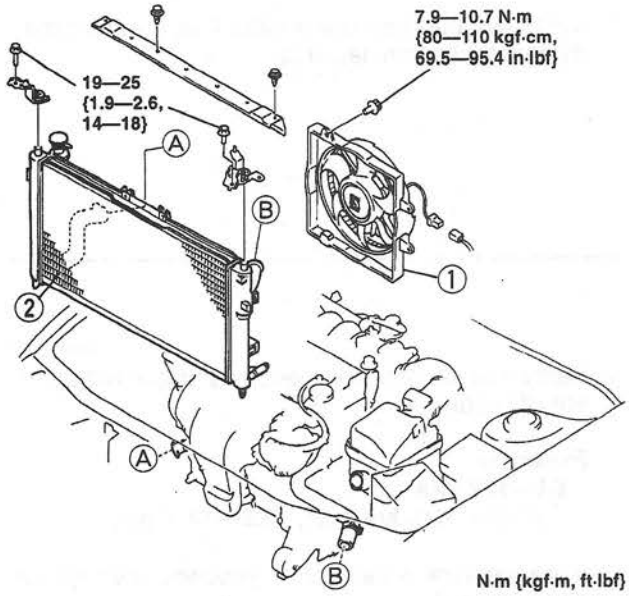

N·m {kgf·m, ft·lbf}

W6U112WA4

KL

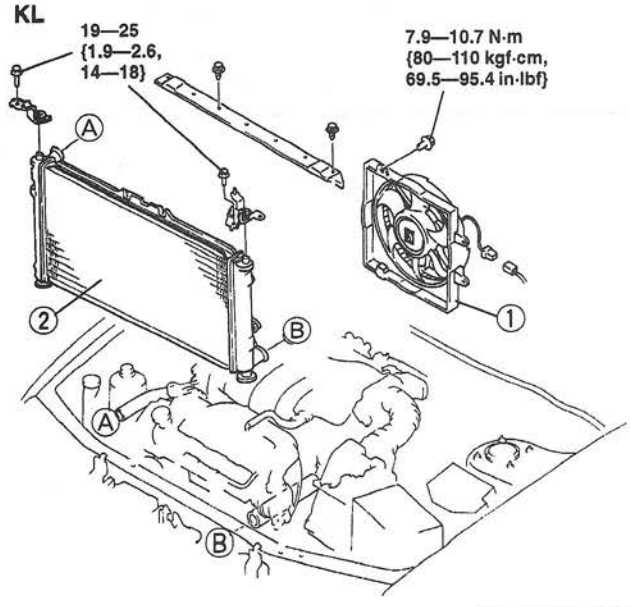

N·m {kgf·m, ft·lbf}

W6U112WA5

THERMOSTAT REMOVAL/INSTALLATION

W6U112W07

1. Disconnect the negative battery cable.
2. Remove the ignition coil (KL).
3. Drain the engine coolant. (Refer to 01–12 ENGINE COOLANT REPLACEMENT.)
4. Remove in the order indicated in the table.
5. Install in the reverse order of removal.

FS

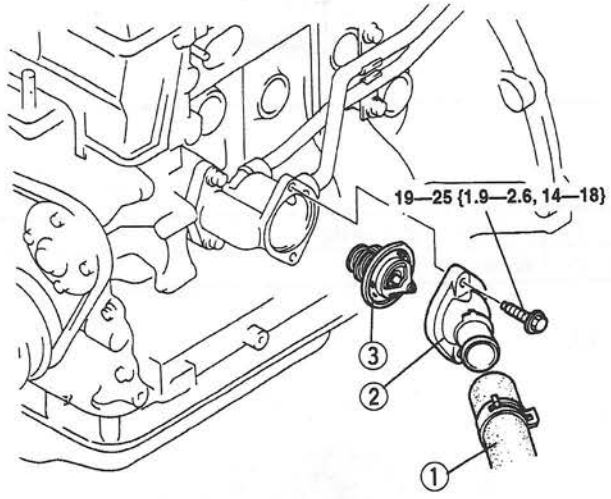

N·m {kgf·m, ft·lbf}

W6U112WA7

1	Lower radiator hose
2	Thermostat cover
3	Thermostat ☞ Installation Note

KL

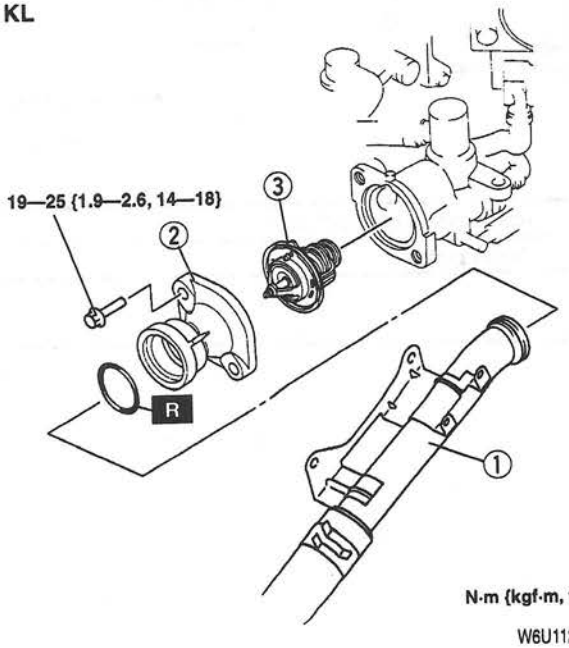

N·m {kgf·m, ft·lbf}

W6U112WA8

1	Water inlet pipe (MTX), Oil cooler (ATX)
2	Thermostat cover
3	Thermostat ☞ Installation Note

Thermostat Installation Note

1. Verify that the jiggle pin is aligned with the projection of the thermostat gasket as shown.

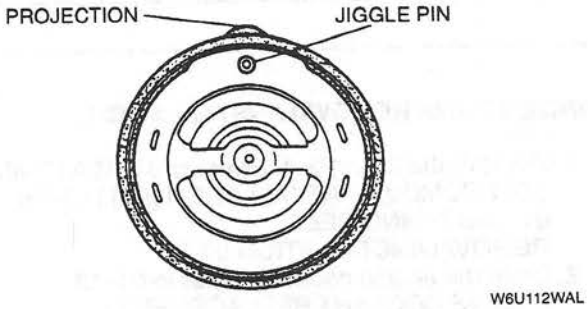

W6U112WAL

2. Install the thermostat into the thermostat case, aligning the projection on the gasket to the thermostat case as shown.

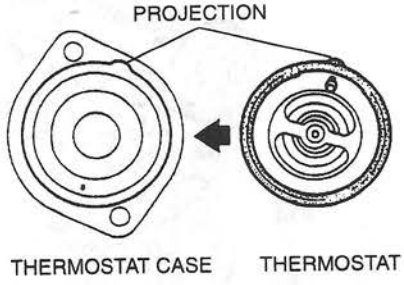

W6U112WA9

THERMOSTAT INSPECTION

W6U112W08

Inspect the thermostat for the following and replace as necessary.
- Open valve in room temperature
- Opening temperature and lift of the valve

Initial-opening temperature °C {°F}	80—84 {176—183}
Full-open temperature °C {°F}	95 {203}
Full-open lift mm {in}	8.5 {0.33} min.

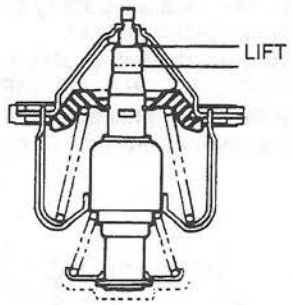

W6U112WAH

WATER PUMP REMOVAL/INSTALLATION

1. Remove the timing belt. (Refer to 01–10A TIMING BELT REMOVAL/INSTALLATION [FS].) (Refer to 01–10B TIMING BELT REMOVAL/INSTALLATION [KL].)
2. Drain the engine coolant. (Refer to 01–12 ENGINE COOLANT REPLACEMENT.)
3. Remove in the order indicated in the table.
4. Install in the reverse order of removal.

FS

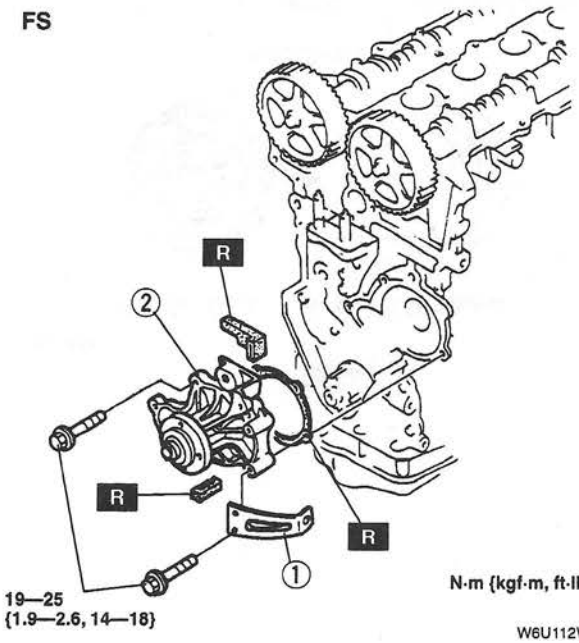

W6U112WAA

W6U112W09

1	P/S oil pump adjuster
2	Water pump

KL

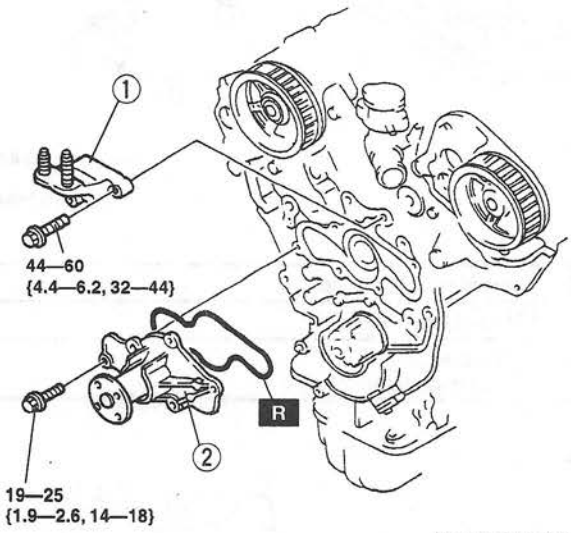

W6U112WAB

1	No.3 engine mount bracket
2	Water pump

COOLING FAN MOTOR INSPECTION

W6U112W10

1. Verify that the battery is fully charged. (Refer to 01–17 BATTERY INSPECTION.)
2. Disconnect the cooling fan motor connector.
3. Connect battery positive voltage and an ammeter to the cooling fan motor connector.

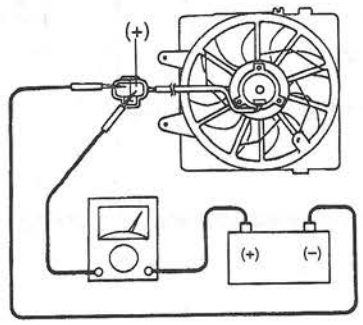

W6U112WAC

4. Verify that the cooling fan motor operates smoothly at the standard current draw.

Item	Engine	
	FS	KL
Current (A)	6.0—9.0	

5. If not as specified, replace the cooling fan motor.

COOLING FAN MOTOR REMOVAL/INSTALLATION

W6U112W11

1. Remove the cooling fan component. (Refer to 01–12 RADIATOR REMOVAL/INSTALLATION.)
2. Remove in the order indicated in the table.
3. Install in the reverse order to removal.

1	Cooling fan blade
2	Cooling fan motor
3	Radiator cowling

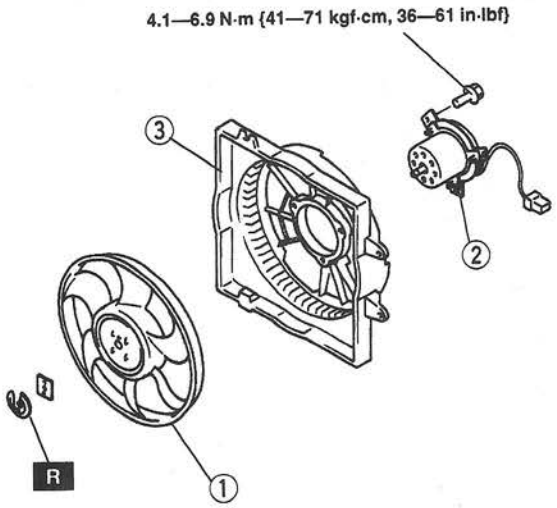

W6U112WAD

COOLING FAN RELAY INSPECTION

1. Disconnect the negative battery cable.
2. Remove the cooling fan relay.
3. Apply battery positive voltage and inspect for continuity between terminals of the cooling fan relay by using an ohmmeter.

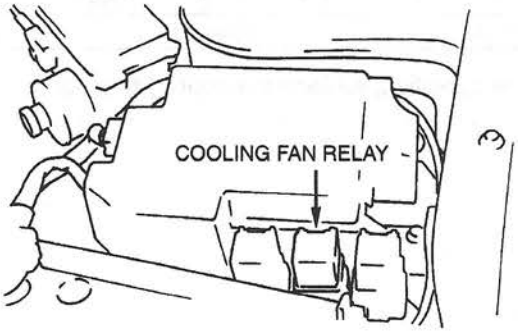

W6U112WAJ

○—○ : Continuity

Step	Terminal			
	A	B	C	D
1	○	○		
2	B+	GND	○	○

W6U112WAK

W6U112W12

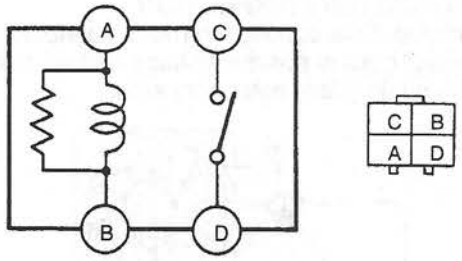

W6U112WAE

4. If not as specified, replace the cooling fan relay.

01–13A INTAKE-AIR SYSTEM [FS]

VACUUM HOSE ROUTING DIAGRAM [FS] 01–13A–1
INTAKE-AIR SYSTEM REMOVAL/INSTALLATION [FS] 01–13A–2
Intake Manifold Removal Note 01–13A–3
Intake Manifold Installation Note 01–13A–3
IDLE AIR CONTROL (IAC) VALVE INSPECTION [FS] 01–13A–3
ACCELERATOR PEDAL REMOVAL/INSTALLATION [FS] 01–13A–3
Accelerator Cable Installation Note ... 01–13A–3
ACCELERATOR CABLE INSPECTION/ADJUSTMENT [FS] 01–13A–4

VACUUM HOSE ROUTING DIAGRAM [FS]

W6U113W01

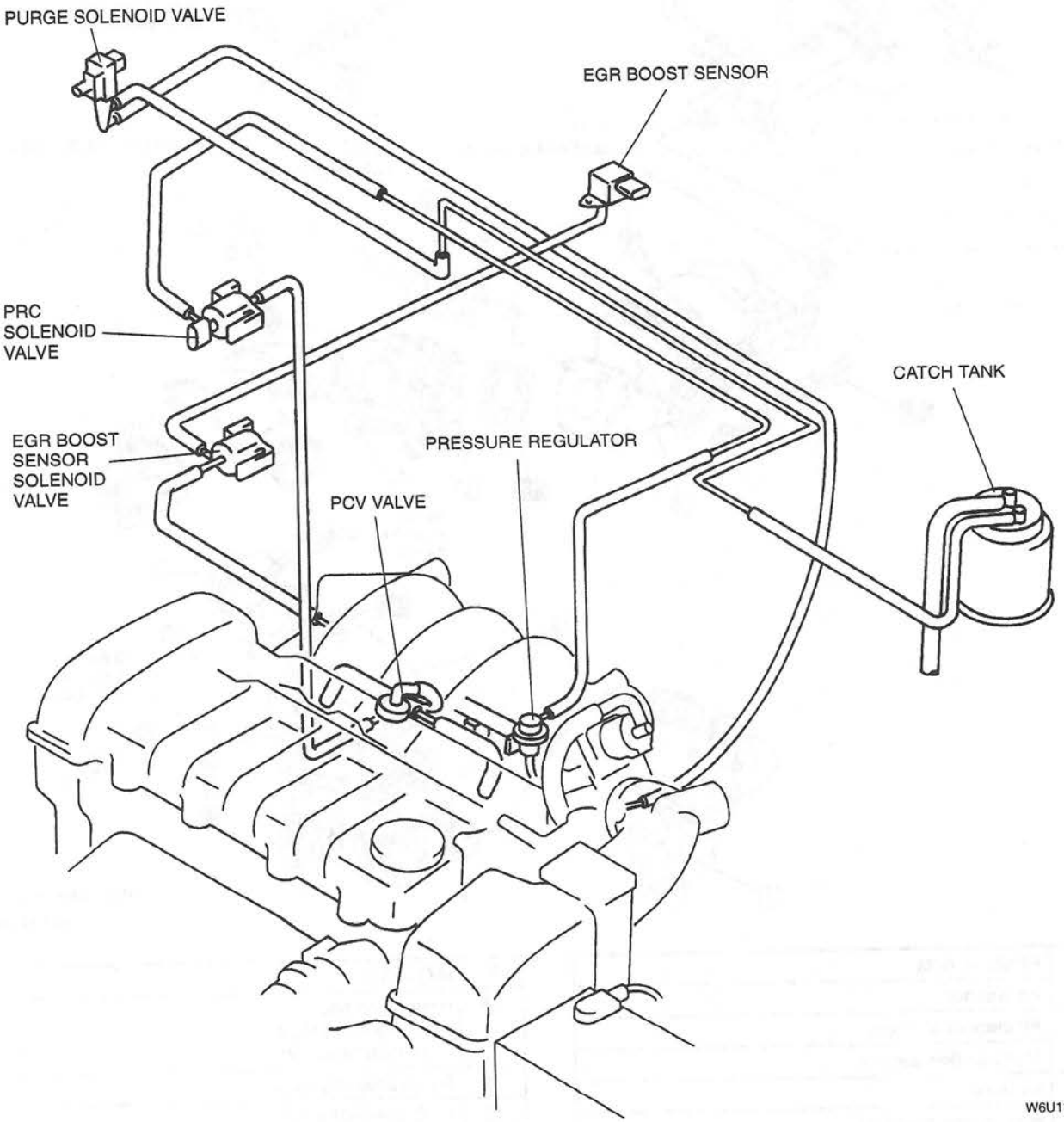

W6U113WA1

INTAKE-AIR SYSTEM REMOVAL/INSTALLATION [FS]

W6U113W02

Warning

- **When the engine and intake-air system are hot, they can badly burn. Turn off the engine and wait until they are cool before removing or installing the intake-air system.**

1. Disconnect the negative battery cable.
2. Drain the engine coolant from radiator. (Refer to 01–12 COOLING SYSTEM SERVICE WARNING.) (Refer to 01–12 ENGINE COOLANT REPLACEMENT.)
3. Remove in the order indicated in the table.
4. Install in the reverse order of removal.
5. Refill the engine coolant to radiator. (Refer to 01–12 COOLING SYSTEM SERVICE WARNING.) (Refer to 10–12 ENGINE COOLANT REPLACEMENT.)

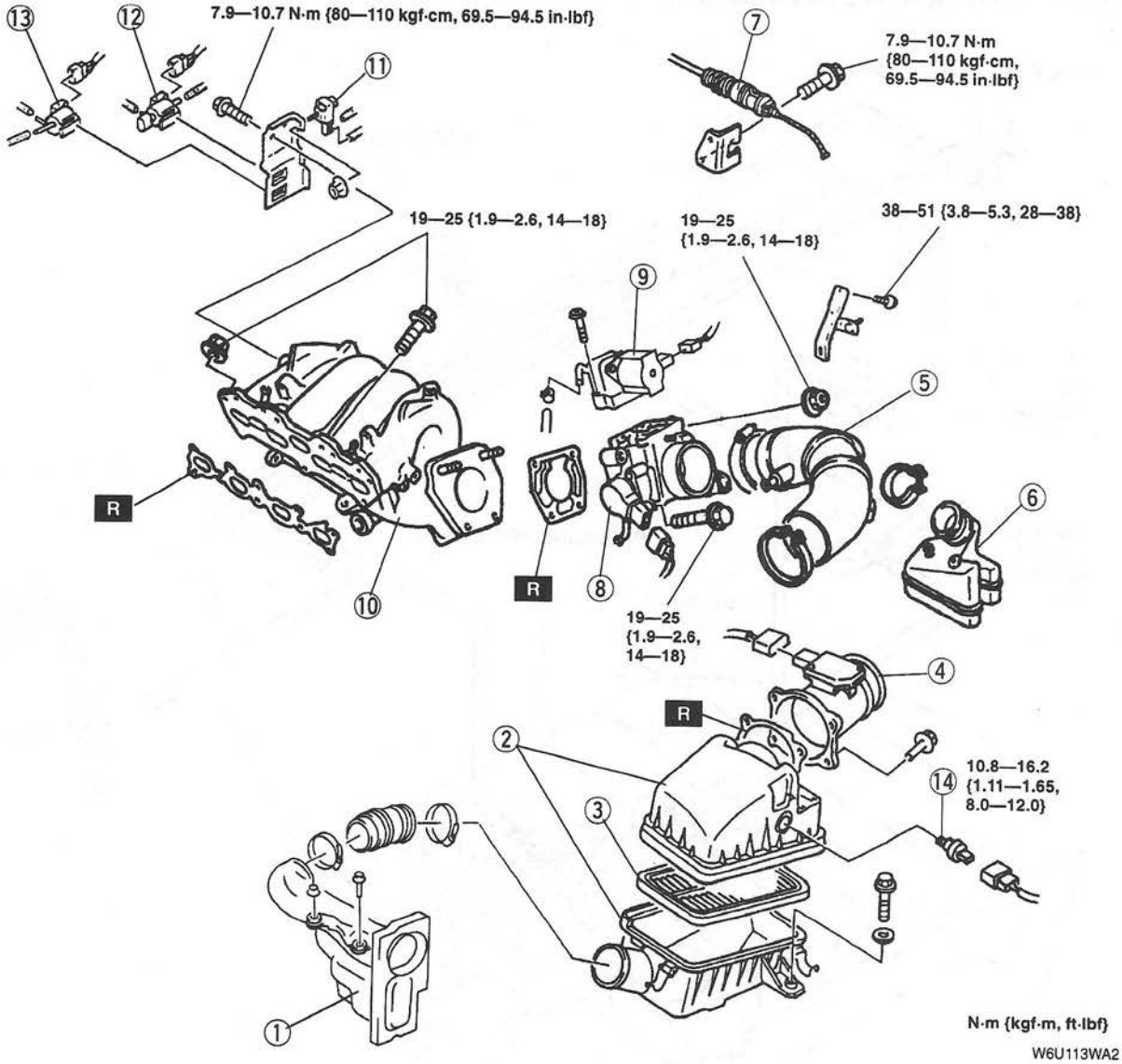

W6U113WA2

1	Fresh-air duct
2	Air cleaner
3	Air cleaner element
4	Mass air flow sensor
5	Air hose
6	Resonance chamber
7	Accelerator cable
8	Throttle body

9	IAC valve
10	Intake manifold ☞ Removal Note ☞ Installation Note
11	Purge solenoid valve
12	PRC solenoid valve
13	EGR boost sensor solenoid valve
14	Intake air temperature sensor

Intake Manifold Removal Note

Warning
- **Fuel vapor is hazardous. It can very easily ignite, causing serious injury and damage. Always keep sparks and flames away from fuel.**
- **Fuel line spills and leaks are dangerous. Fuel can ignite and cause serious injuries or death and damage. Fuel can also irritate skin and eyes. To prevent this, always complete the "BEFORE REPAIR PROCEDURE" (Refer to 01–14 BEFORE REPAIR PROCEDURE.).**

- To remove the intake manifold, remove the fuel distributor, EGR pipe, and EGR valve.

Intake Manifold Installation Note
- To install the intake manifold gasket, make sure that the convex side of gasket is faced to the intake manifold side.

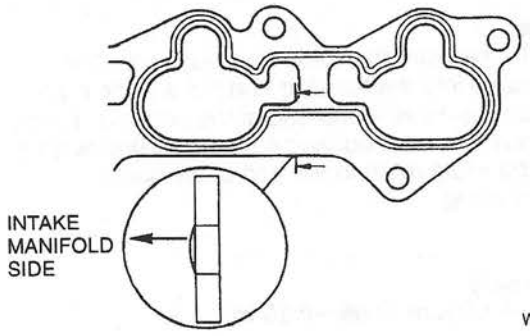

W6U113WA3

IDLE AIR CONTROL (IAC) VALVE INSPECTION [FS]

W6U113W03

1. Verify that the ignition switch is OFF.
2. Disconnect the IAC valve connector.
3. Measure the resistance between the IAC valve terminal by using an ohmmeter.

Resistance
7.7—9.3 Ω [23 °C {73.4 °F}]

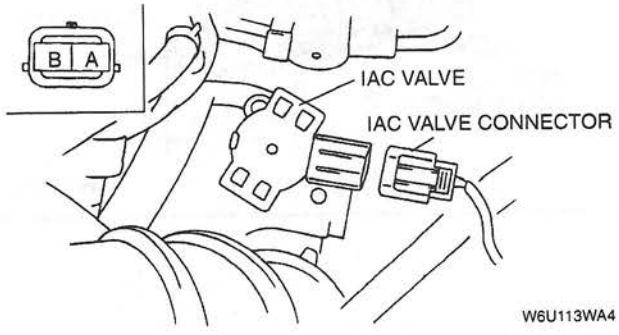

W6U113WA4

4. If not as specified, replace the IAC valve.

ACCELERATOR PEDAL REMOVAL/INSTALLATION [FS]

W6U113W04

1. Remove in the order indicated in the table.
2. Install in the reverse order of removal.

1	Accelerator cable ☞ Installation Note
2	Retainer
3	Accelerator pedal
4	Return spring

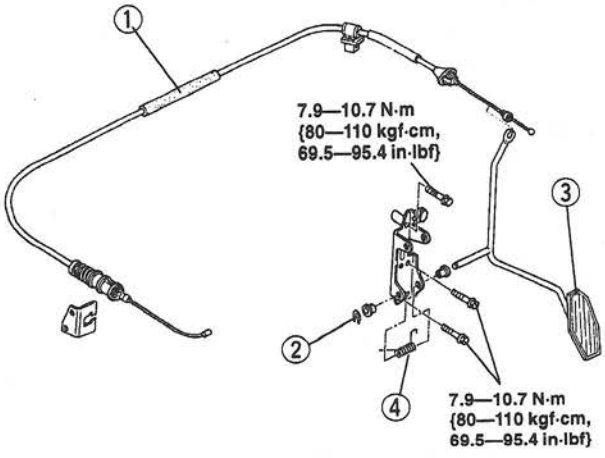

W6U113WA5

Accelerator Cable Installation Note
- Carry out the "ACCELERATOR CABLE INSPECTION/ADJUSTMENT" procedure after installing the accelerator cable. (Refer to 01–13A ACCELERATOR CABLE INSPECTION/ADJUSTMENT.)

ACCELERATOR CABLE INSPECTION/ADJUSTMENT [FS]

W6U113W05

1. Verify that the throttle valve is closed.
2. Measure the free play of throttle cable.

Note

- To measure the cable free play, push the cable into the housing and put a white mark on the cable at the end of the housing. Then pull the cable out and measure distance from the white mark to the end of the cable housing.

Free play
1.5—4.0 mm {0.06—0.15 in}

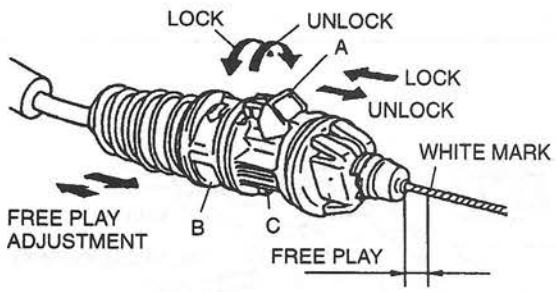

W6U113WA6

3. If not within the specification, adjust the accelerator cable as follows.
   (1) Move the white loocking tab A to the unlock position.
   (2) Turn stopper B to the unlock position.

Note

- If stopper B will not unlock, it may be necessary to carefully bend tab C out by using a suitable tool.

   (3) To adjust the free play, push or pull the throttle cable housing directly behind the spring.
   (4) Turn stopper B to the lock position.
4. Measure the throttle cable free play once again, making sure that it is within the specification.
5. Move the white locking tab A to the lock position.
6. Confirm correct accelerator operation.

01–13B INTAKE-AIR SYSTEM [KL]

VACUUM HOSE ROUTING DIAGRAM [KL] 01–13B–1
INTAKE-AIR SYSTEM REMOVAL/INSTALLATION [KL] 01–13B–2
Intake Manifold Removal Note 01–13B–3
Intake Manifold Installation Note 01–13B–3
IDLE AIR CONTROL (IAC) VALVE INSPECTION [KL] 01–13B–3
INTAKE MANIFOLD COMPONENT DISASSEMBLY/ASSEMBLY [KL] 01–13B–3
VARIABLE RESONANCE INDUCTION SYSTEM (VRIS) SHUTTER VALVE ACTUATOR No.1 INSPECTION [KL] .. 01–13B–4
VARIABLE RESONANCE INDUCTION SYSTEM (VRIS) SHUTTER VALVE ACTUATOR No.2 INSPECTION [KL] .. 01–13B–4
VARIABLE RESONANCE INDUCTION SYSTEM (VRIS) CHECK VALVE (ONE-WAY) INSPECTION [KL] 01–13B–4
VARIABLE RESONANCE INDUCTION SYSTEM (VRIS) SOLENOID VALVE No.1 No.2 INSPECTION [KL] 01–13B–5
ACCELERATOR PEDAL REMOVAL/INSTALLATION [KL] 01–13B–5
Accelerator Cable Installation Note ... 01–13B–5
ACCELERATOR CABLE INSPECTION/ADJUSTMENT [KL] 01–13B–6

VACUUM HOSE ROUTING DIAGRAM [KL]

W6U113W51

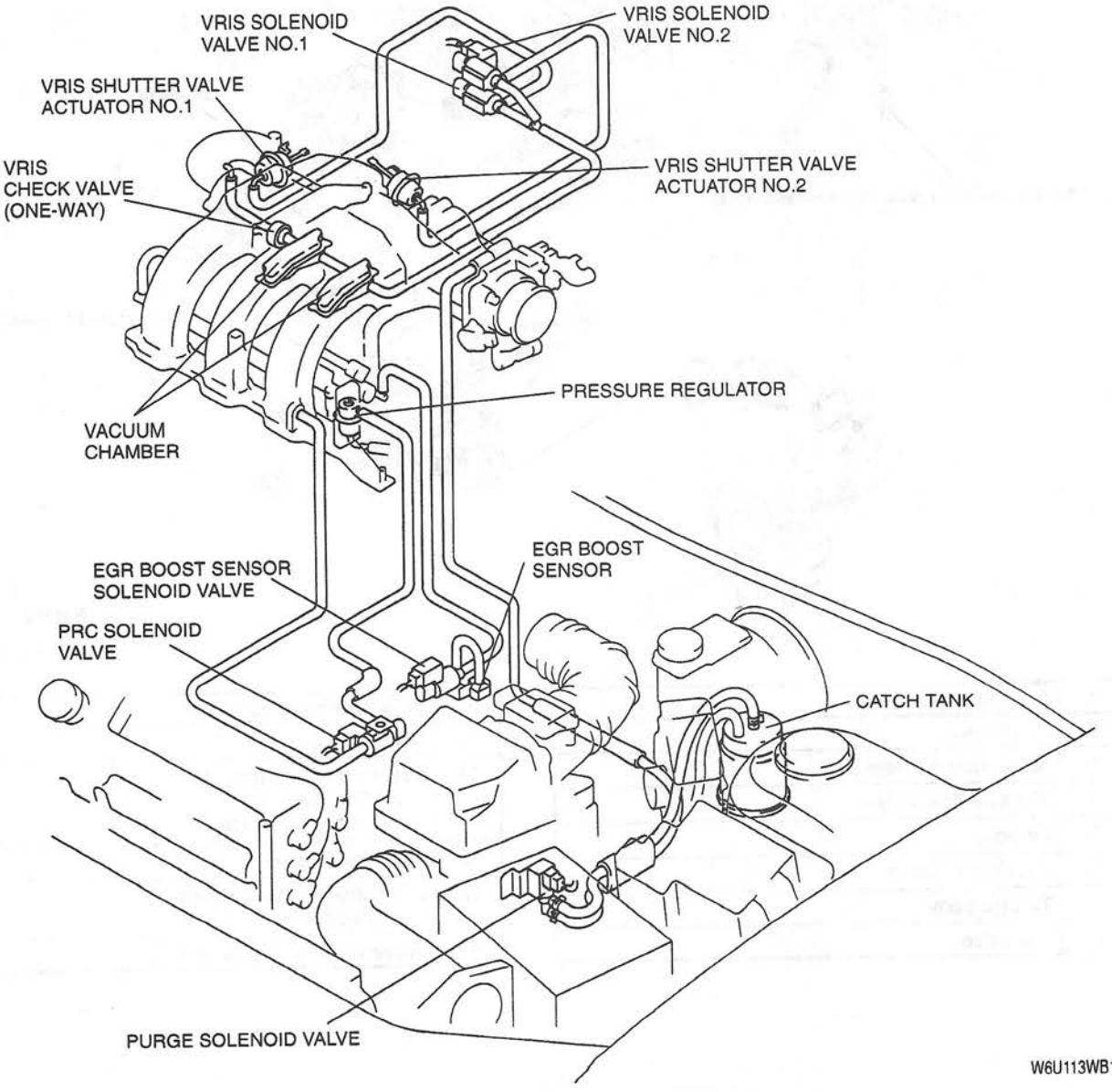

W6U113WB1

INTAKE-AIR SYSTEM REMOVAL/INSTALLATION [KL]

W6U113W52

Warning

- **When the engine and intake-air system are hot, they can badly burn. Turn off the engine and wait until they are cool before removing or installing the intake-air system.**

1. Disconnect the negative battery cable.
2. Drain the engine coolant from radiator. (Refer to 01–12 COOLING SYSTEM SERVICE WARNINGS.) (Refer to 10–12 ENGINE COOLANT REPLACEMENT.)
3. Remove in the order indicated in the table.
4. Install in the reverse order of removal.
5. Refill the engine coolant to radiator. (Refer to 01–12 COOLING SYSTEM SERVICE WARNINGS.) (Refer to 10–12 ENGINE COOLANT REPLACEMENT.)

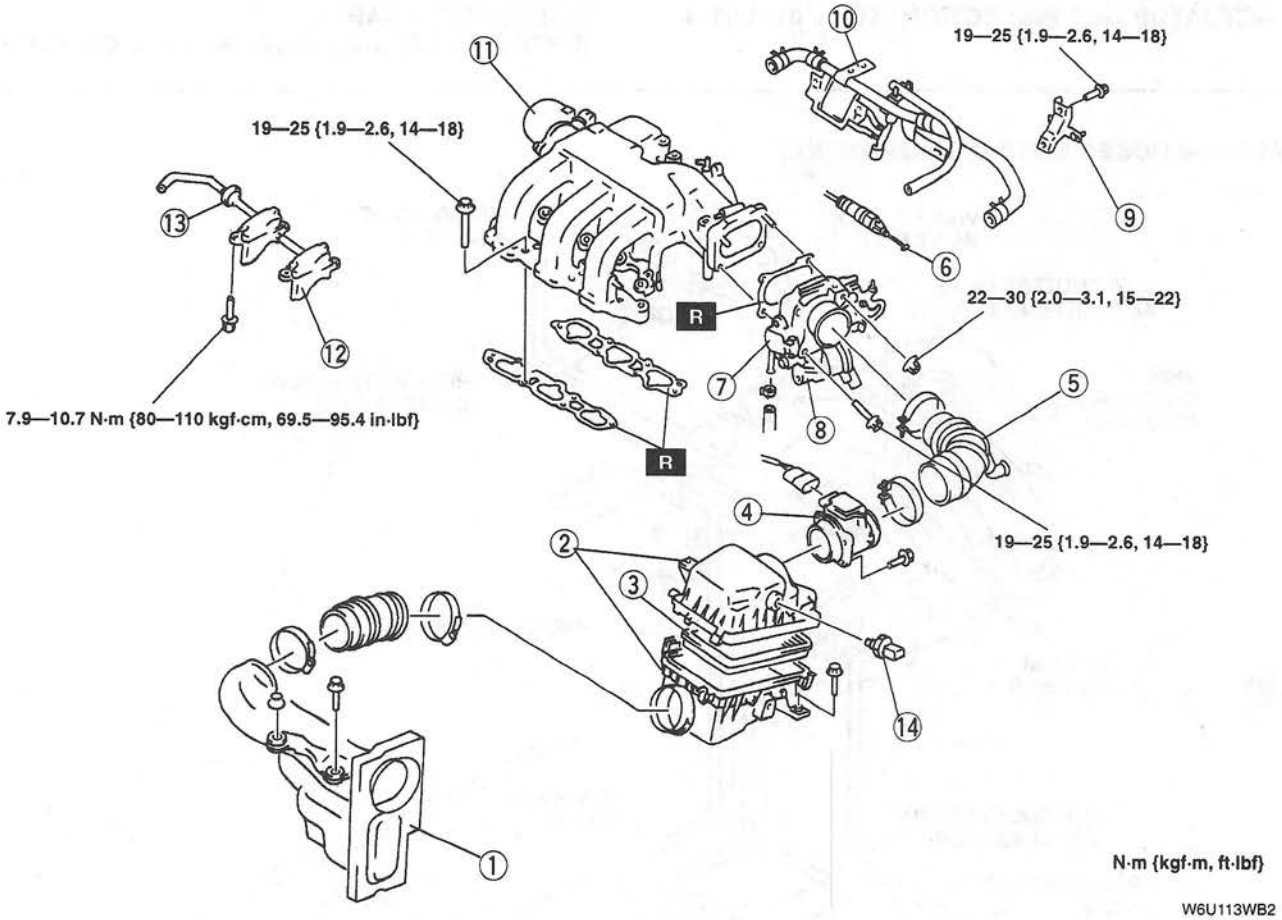

W6U113WB2

1	Fresh-air duct
2	Air cleaner
3	Air cleaner element
4	Mass air flow sensor
5	Air hose
6	Accelerator cable
7	Throttle body
8	IAC valve

9	Intake manifold stay
10	Ventilation pipe
11	Intake manifold component ☞ Removal Note ☞ Installation Note
12	Vacuum chamber
13	VRIS check valve (one-way) ☞ Inspection
14	Intake air temperature sensor

Intake Manifold Removal Note

Warning

- **Fuel vapor is hazardous. It can very easily ignite, causing serious injury and damage. Always keep sparks and flames away from fuel.**
- **Fuel line spills and leaks are dangerous. Fuel can ignite and cause serious injuries or death and damage. Fuel can also irritate skin and eyes. To prevent this, always complete the "BEFORE REPAIR PROCEDURE" (Refer to 01–14 BEFORE REPAIR PROCEDURE.).**

- To remove the intake manifold, remove the fuel distributor.

Intake Manifold Installation Note

- To install the intake manifold gasket, make sure that the convex side of gasket is faced to the intake manifold side.

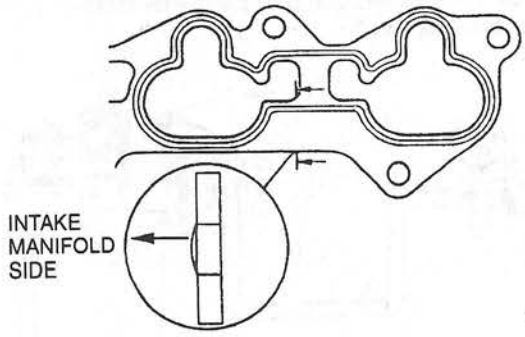

W6U113WB3

IDLE AIR CONTROL (IAC) VALVE INSPECTION [KL]

W6U113W53

1. Verify that the ignition switch is OFF.
2. Disconnect the IAC valve connector.
3. Measure the resistance between the IAC valve terminal by using an ohmmeter.

Resistance
8.7—10.5 Ω [24 °C {75 °F}]

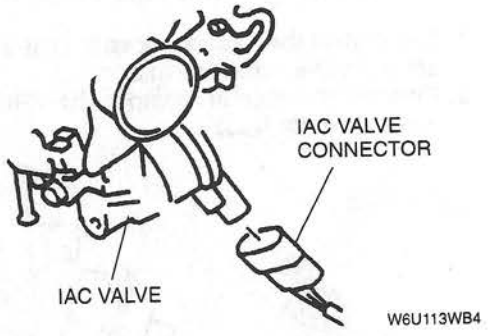

W6U113WB4

4. If not as specified, replace the IAC valve.

INTAKE MANIFOLD COMPONENT DISASSEMBLY/ASSEMBLY [KL]

W6U113W56

1. Disassemble in the order indicated in the table.
2. Assemble in the reverse order of disassembly.

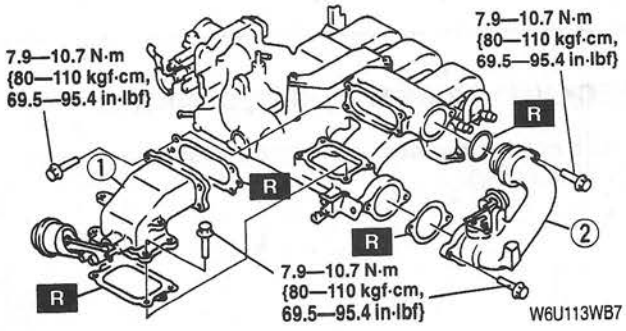

W6U113WB7

1	VRIS shutter valve body component
2	Air intake pipe component

VARIABLE RESONANCE INDUCTION SYSTEM (VRIS) SHUTTER VALVE ACTUATOR No.1 INSPECTION [KL]

W6U113W54

1. Disconnect the vacuum hose from the VRIS shutter valve actuator No.1.
2. Connect a vacuum pump to the VRIS shutter valve actuator No.1.

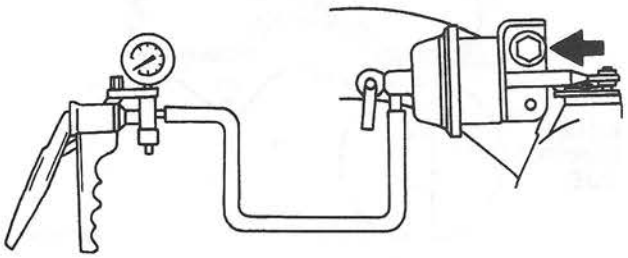

W6U113WB5

3. Apply vacuum slowly and check the rod movement of the VRIS shutter valve actuator as shown.

Vacuum kPa {mmHg, inHg}	Rod movement
Below 1.4 {10, 0.39}	Not pulled
1.4—3.9 {10—30, 0.4—1.1}	Start to move
Above 23 {170, 6.7}	Fully pulled

4. If not as specified, replace the air intake pipe component.

Note

- The VRIS shutter valve actuator No.1 is assembled to the air intake pipe component.

VARIABLE RESONANCE INDUCTION SYSTEM (VRIS) SHUTTER VALVE ACTUATOR No.2 INSPECTION [KL]

W6U113W55

1. Disconnect the vacuum hose from the VRIS shutter valve actuator No.2.
2. Connect the vacuum pump to the VRIS shutter valve actuator No.2.

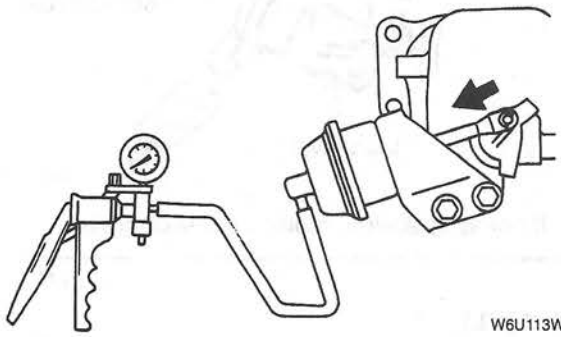

W6U113WB6

3. Apply vacuum slowly and check the rod movement of the VRIS shutter valve actuator as shown.

Vacuum kPa {mmHg, inHg}	Rod movement
Below 1.4 {10, 0.39}	Not pulled
1.4—3.9 {10—30, 0.4—1.1}	Start to move
Above 23 {170, 6.7}	Fully pulled

4. If not as specified, replace the VRIS shutter valve body component.

Note

- The VRIS shutter valve actuator No.2 is assembled to the VRIS shutter valve body component.

VARIABLE RESONANCE INDUCTION SYSTEM (VRIS) CHECK VALVE (ONE-WAY) INSPECTION [KL]

W6U113W57

1. Remove the check valve.
2. Blow through A and verify that air flows from B.
3. Blow through B and verify that air does not flow from A.

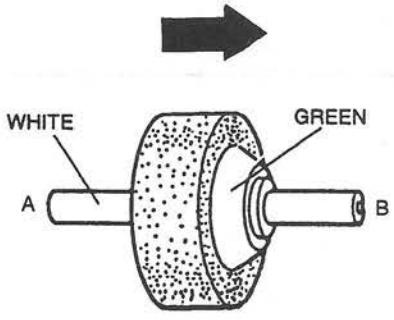

W6U113WB8

4. If not as specified, replace the VRIS check valve (one-way).

VARIABLE RESONANCE INDUCTION SYSTEM (VRIS) SOLENOID VALVE No.1 No.2 INSPECTION [KL]

W6U113W58

1. Remove the VRIS solenoid valve No.1 and No.2.
2. Check for air flow between each port under the following conditions.

○—○ : Continuity ○═○ : Airflow

Step	Terminal		Port		
	A	B	A	B	C
1	○—○			○═○	
2	B+	GND	○═○		

W6U113WB9

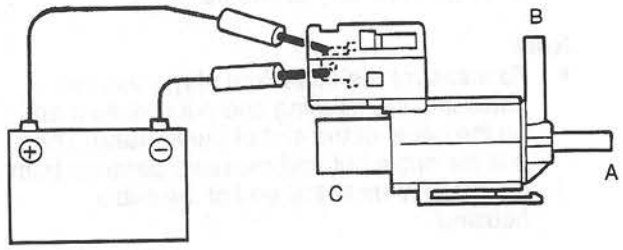

W6U113WC0

3. If not as specified, replace the necessary parts.

ACCELERATOR PEDAL REMOVAL/INSTALLATION [KL]

W6U113W59

1. Remove in the order indicated in the table.
2. Install in the reverse order of removal.

1	Accelerator cable ☞ Installation Note
2	Retainer
3	Accelerator pedal
4	Return spring

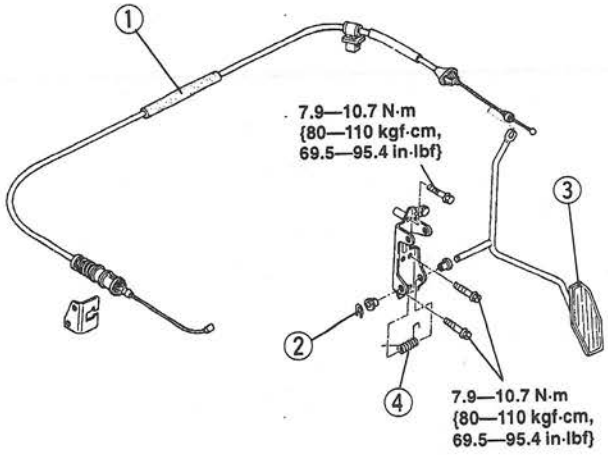

W6U113WC1

Accelerator Cable Installation Note

- Carry out the "ACCELERATOR CABLE INSPECTION/ADJUSTMENT" procedure after installing the accelerator cable. (Refer to ACCELERATOR CABLE INSPECTION/ADJUSTMENT.)

ACCELERATOR CABLE INSPECTION/ADJUSTMENT [KL]

W6U113W60

1. Verify that the throttle valve is closed.
2. Measure the free play of throttle cable.

Note
- To measure the cable free play, push the cable into the housing and put a white mark on the cable at the end of the housing. Then pull the cable out and measure distance from the white mark to the end of the cable housing.

Free play
1.5—4.0 mm {0.06—0.15 in}

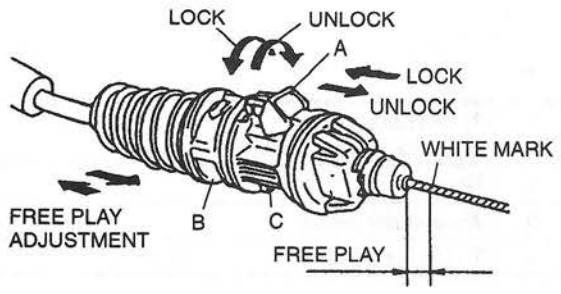

W6U113WC2

3. If not within the specification, adjust the accelerator cable as follows.
   (1) Move the white locking tab A to the unlock position.
   (2) Turn stopper B to the unlock position.

Note
- If stopper B will not unlock, it may be necessary to carefully bend tab C out by using a suitable tool.

   (3) To adjust the free play, push or pull the throttle cable housing directly behind the spring.
   (4) Turn stopper B to the lock position.
4. Measure the throttle cable free play once again, making sure that it is within the specification.
5. Move the white locking tab A to the lock position.
6. Confirm correct accelerator operation.

01–14 FUEL SYSTEM

BEFORE REPAIR PROCEDURE 01–14–1
Fuel Line Safety Procedure 01–14–1
AFTER REPAIR PROCEDURE 01–14–1
Fuel Hose Installation 01–14–1
Fuel Leakage Inspection 01–14–2
FUEL TANK REMOVAL/INSTALLATION 01–14–3
Fuel Drawing Note 01–14–4
Joint Hose Installation Note 01–14–4
Fuel Hose/Evaporative Hose Installation Note 01–14–4
Fuel Pipe Disassembly Note 01–14–4
Fuel Pipe Assembly Note 01–14–5
Nonreturn Valve Installation Note 01–14–5
FUEL TANK INSPECTION 01–14–5
FUEL SHUT-OFF VALVE INSPECTION 01–14–6
NONRETURN VALVE INSPECTION 01–14–6
FUEL PUMP REMOVAL/INSTALLATION 01–14–7
Fuel Pipe Disassembly/Assembly Note 01–14–7
FUEL PUMP INSPECTION 01–14–7
Fuel Pump Continuity 01–14–7
Fuel Pump Maximum Pressure Inspection 01–14–7
Fuel Line Hold Pressure Inspection ... 01–14–8
FUEL FILTER (HIGH-PRESSURE SIDE) REMOVAL/INSTALLATION 01–14–9
FUEL INJECTOR REMOVAL/INSTALLATION [FS] 01–14–9
Fuel Injector Installation Note 01–14–10
FUEL INJECTOR REMOVAL/INSTALLATION [KL] 01–14–10
Fuel Distributor Installation Note 01–14–11
Fuel Injector Installation Note 01–14–11
FUEL INJECTOR INSPECTION 01–14–11
On-vehicle 01–14–11
Fuel Injector Resistance Inspection [FS] 01–14–11
Fuel Injector Resistance Inspection [KL] 01–14–12
Fuel Leakage Test [FS] 01–14–12
Fuel Leakage Test [KL] 01–14–13
Volume Test [FS] 01–14–14
Volume Test [KL] 01–14–15
PRESSURE REGULATOR REMOVAL/INSTALLATION 01–14–16
PRESSURE REGULATOR INSPECTION 01–14–16
PRC SOLENOID VALVE REMOVAL/INSTALLATION 01–14–17
PRC SOLENOID VALVE INSPECTION . 01–14–17
FUEL PUMP RELAY INSPECTION 01–14–17

BEFORE REPAIR PROCEDURE

W6U114W01

Warning
- **Fuel vapor is hazardous. It can easily ignite, causing serious injury and damage. Always keep sparks and flames away from fuel.**

- Fuel in the fuel system is under high-pressure when the engine is not running.

Warning
- **Fuel line spills and leaks are dangerous. Fuel can ignite and cause serious injuries or death and damage. Fuel can also irritate skin and eyes. To prevent this, always complete the following "Fuel Line Safety Procedure".**

Fuel Line Safety Procedure
1. Remove the fuel pump relay.

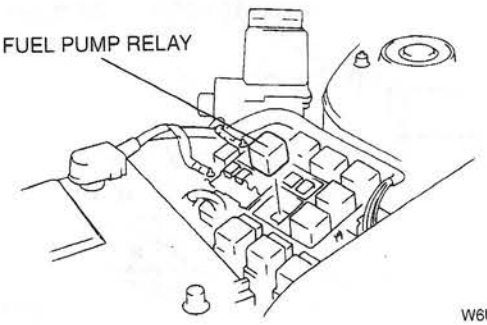

W6U114WA0

2. Start the engine.
3. After the engine stalls, crank the engine several times.
4. Turn off the ignition switch.
5. Install the fuel pump relay.
6. Remove the fuel filler cap and release the pressure in the fuel tank.

AFTER REPAIR PROCEDURE

W6U114W02

Warning
- **Fuel line spills and leaks are dangerous. Fuel can ignite and cause serious injuries or death and damage. When installing the fuel hose, observe "Fuel Hose Installation" and "Fuel Leakage Inspection" described below.**

Fuel Hose Installation
1. Replace damaged or deformed fuel hose, fuel pipe, and hose clamps.
2. When installing the fuel hose onto the fuel pipe, fit the hose onto the pipe over **25 mm {1.00 in}**. When the pipe has a stopper, fit the hose until it contacts the stopper.

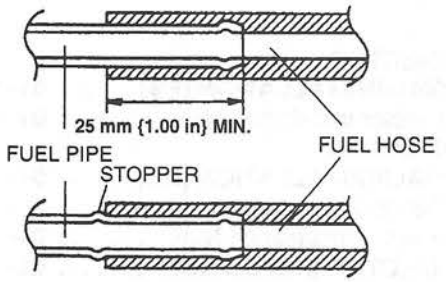

W6U114WA1

3. Install a hose clamp over the fuel hose within the clamp installation range as shown, avoiding the original clamp position.

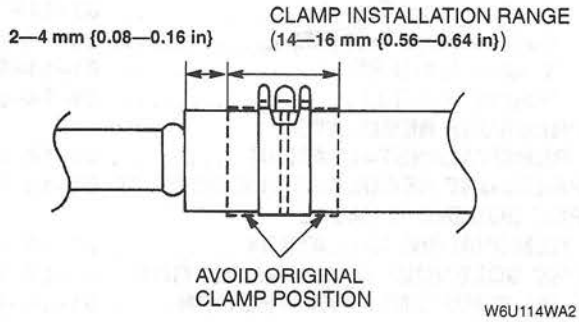

W6U114WA2

4. When installing two clamps, their tabs must be positioned **more than 45° (desired 180°)** aparted.

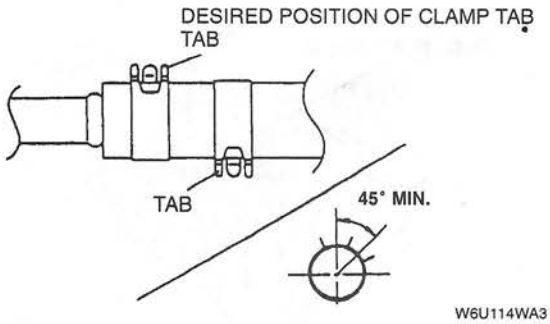

W6U114WA3

Fuel Leakage Inspection

Warning

- **Fuel line spills and leaks are dangerous. Fuel can ignite and cause serious injuries or death and damage. Always carry out the following procedure with the engine stopped.**

1. Disconnect the negative battery cable.
2. Remove the fuel pump relay.

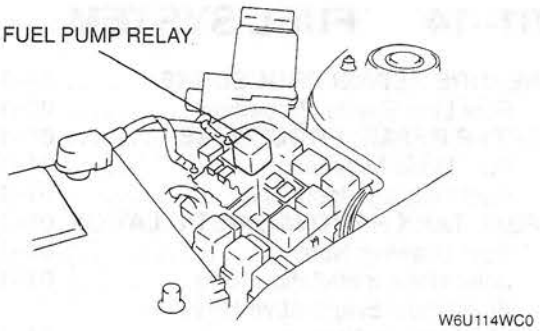

W6U114WC0

Caution

- **Connecting the wrong fuel pump relay socket terminals may possibly cause a malfunction. Carefully connect the specified terminals only.**

3. Connect fuel pump relay socket terminals 30 and 87 by using a jumper wire.

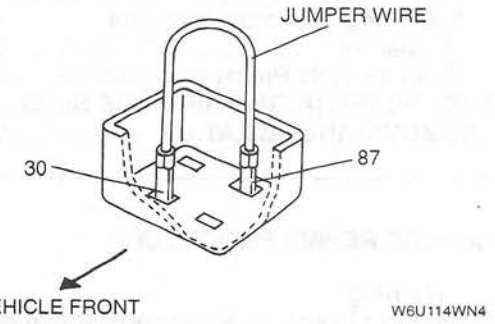

W6U114WN4

Caution

- **Before connecting the negative battery cable be sure all fuel connections, clamps and fittings are secure. Fuel pump will operate at full pressure anytime the cable is connected to the battery. When the cable makes contact, it is sure to arc and create a danger of ignition or explosion.**

4. Connect the negative battery cable to operate the fuel pump.
5. Pressurize the system this way for **at least 5 minutes** to be sure of no leaks.
6. Disconnect the negative battery cable and remove the jumper wire.
7. If there is fuel leakage, inspect for damaged fuel hoses, hose clamps, and fuel pipe sealing surface and replace as necessary.
8. After repair, assemble the system and repeat steps 1 to 6.

FUEL TANK REMOVAL/INSTALLATION

W6U114W03

Warning

- **Repairing a fuel tank that has not been properly steam cleaned can be dangerous. Explosion or fire may cause death or serious injury. Always properly steam clean a fuel tank before repairing it.**

1. Complete the "BEFORE REPAIR PROCEDURE". (Refer to 01–14 BEFORE REPAIR PROCEDURE.)
2. Disconnect the negative battery cable.
3. Siphon the fuel from the fuel tank. (Refer to Fuel Drawing Note.)
4. Remove in the order indicated in the table.
5. Install in the reverse order of removal.
6. Complete the "AFTER REPAIR PROCEDURE". (Refer to 01–14 AFTER REPAIR PROCEDURE.)

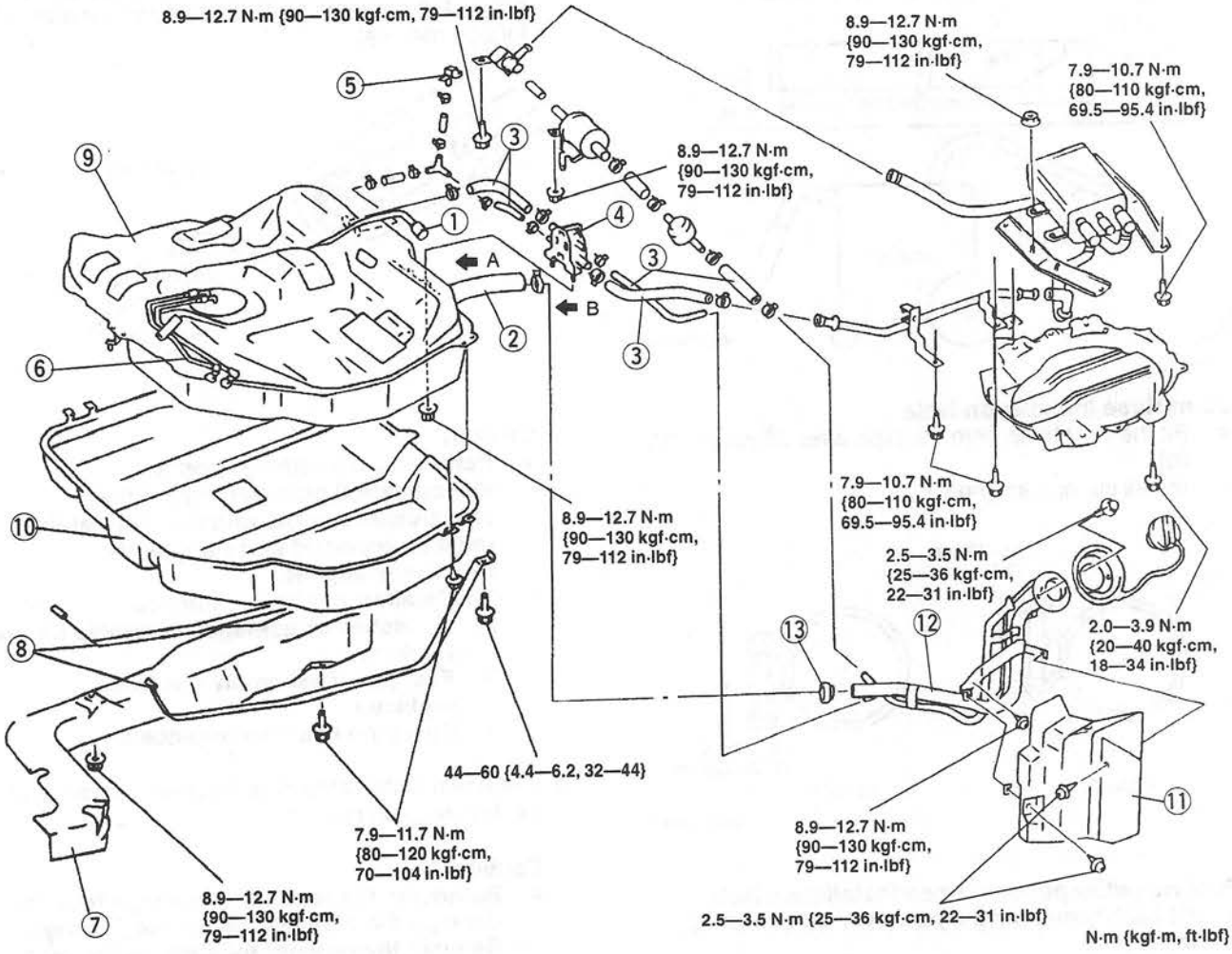

W6U114WA5

1	Fuel pump connector
2	Joint hose ☞ Installation Note
3	Evaporative hose ☞ Installation Note
4	Pressure control valve
5	Fuel tank pressure sensor
6	Fuel pipe ☞ Disassembly Note ☞ Assembly Note

7	Presilencer insulator
8	Fuel tank strap
9	Fuel tank
10	Fuel tank protector
11	Fuel-filler pipe insulator
12	Fuel-filler pipe
13	Nonreturn valve ☞ Installation Note

Fuel Drawing Note

1. Remove the fuel-filler cap and insert a hose into the fuel tank through the fuel-filler pipe.
2. Siphon the fuel into a container by using a fuel drawing pump.

Note

- For easier work, prepare a hose of following size.

Specification

Outer diameter: 13 mm {0.51 in}
Length: 2160 mm {85.0 in} or longer

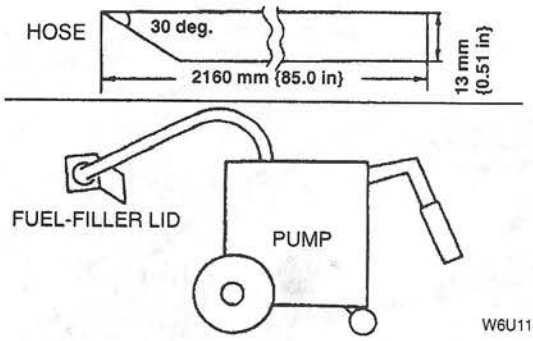

W6U114WA6

Joint Hose Installation Note

- Fit the joint hose onto the pipe **over 35 mm {1.38 in}**.
- Install clamps as shown.

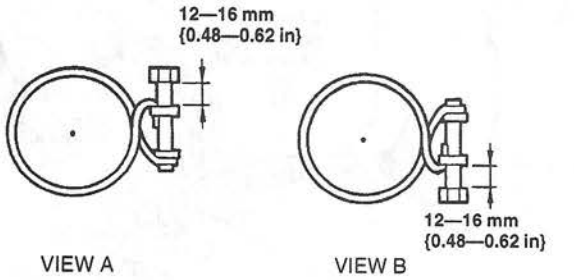

W6U114WAD

Fuel Hose/Evaporative Hose Installation Note

- Fit each hose onto the pipe **over 25 mm {0.98 in}**.

Fuel Pipe Disassembly Note

1. Inspect that the fuel pipe joint area is free of foreign material. Clean if necessary.
2. Squeeze the tabs of the retainer and disconnect the fuel pipe connector.

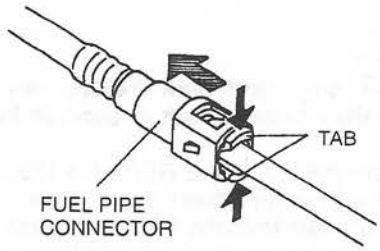

W6U114WA8

3. Cover the disconnected connector and pipe to prevent them from scratched or contaminated with foreign material.

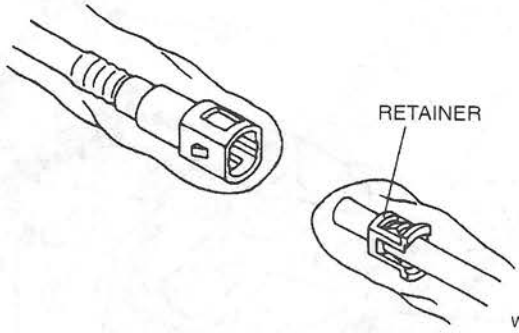

W6U114WA9

Caution

- **Removing the retainer from the disconnected pipe will reduce the effectiveness of the retainer. The retainer must be replaced when any of the followings applies.**
  1. **Retainer has been removed.**
  2. **Scratches or damages observed on the retainer.**
  3. **Fuel pump assembly has been replaced.**
  4. **Fuel pipe has been replaced.**

4. If removal of the retainer is required, remove it in the following procedure.

Caution

- **Removing the retainer by using a tool can damage the pipe and cause fuel leakage. Remove the retainer by opening the tabs outward by hand.**

(1) Open the tabs of the retainer outward.
(2) Remove and discard the retainer.

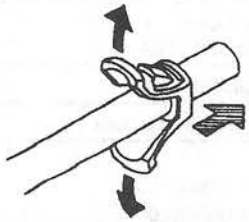

W6U114WAA

Fuel Pipe Assembly Note

1. When retainer is not removed, observe the following procedure.
   (1) Inspect the fuel pipe for kinks. Replace the fuel pipe if necessary.
   (2) Inspect that the inside of the pipe and the connector is free of foreign material and damage. Clean if necessary, taking care not to damage the sealing surfaces.
   (3) Align the pipe and connector so that the tabs of the retainer are correctly fitted into the connector. Push the connector into the retainer until two clicks are heard.

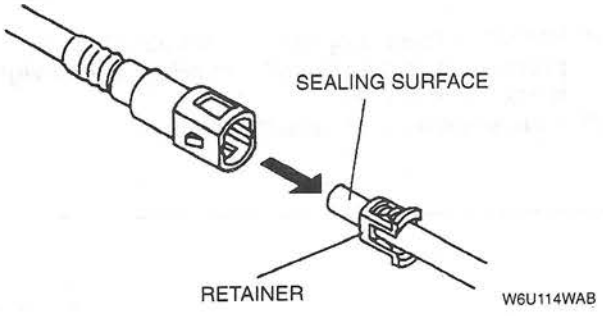

   (4) Pull the connector by hand and verify that it is installed securely. Visually check that the tabs of the retainer are securely fitted into the connector.
2. When retainer is removed, observe the following procedure.

Note

- Use the designated genuine retainer only.

   (1) Install a new retainer onto the connector.
   (2) Inspect that the inside of the pipe and the connector is free of foreign material and damage. Clean if necessary, taking care not to damage the sealing surfaces.
   (3) Push the connector into the retainer until a click is heard.

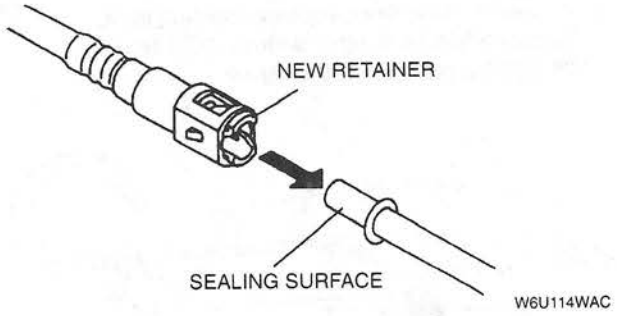

   (4) Pull the connector by hand and verify that it is installed securely. Visually check that the tabs of the retainer are securely fitted into the connector.

Nonreturn Valve Installation Note

- Align the nonreturn valve with the notch in the fuel filler pipe as shown, then install.

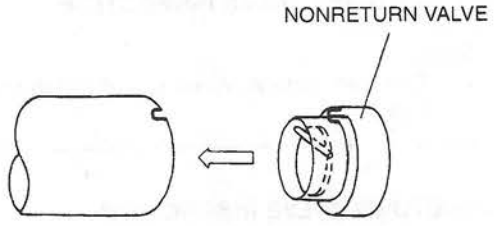

FUEL TANK INSPECTION

W6U114W17

1. Remove the fuel tank. (Refer to 01–14 FUEL TANK REMOVAL/INSTALLATION.)
2. Attach an air hose to the **SST**.
3. Plug the main and return fuel pipe on the fuel pump.
4. Set the **SST** to port A and plug port B as shown in the figure.

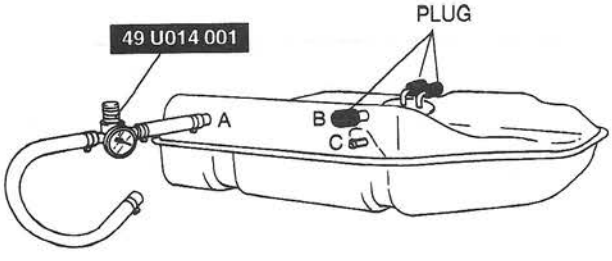

5. Verify that there is airflow from port C when pressure of **+0.98 kPa {+7.4 mmHg, +0.29 inHg}** is applied to port A.
6. If there is no airflow, replace the fuel tank.
7. Remove the plug on port B and plug port C as shown in the figure.

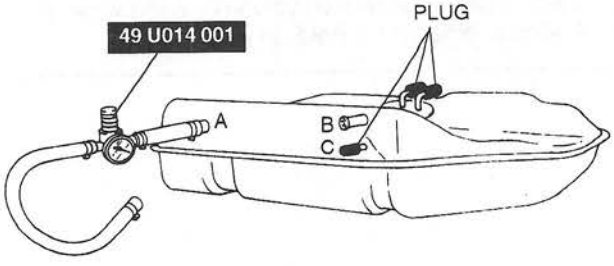

8. Verify that there is airflow from port B when pressure of **+0.98 kPa {+7.4 mmHg, +0.29 inHg}** is applied to port A.
9. If there is no airflow, replace the fuel tank.
10. Turn the fuel tank upside-down with port C plugged as shown in the figure.

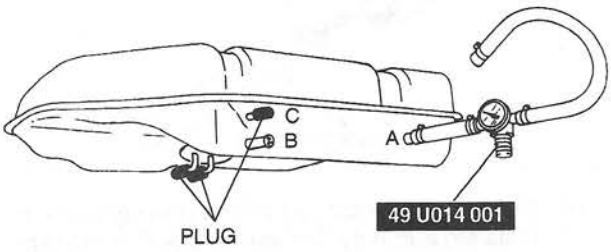

W6U114WB5

11. Verify that there is no airflow from port B when pressure of **+0.98 kPa {+7.4 mmHg, +0.29 inHg}** is applied to port A.
12. If there is airflow, replace the fuel tank.
13. Remove the plug on port C and plug port B as shown in the figure.

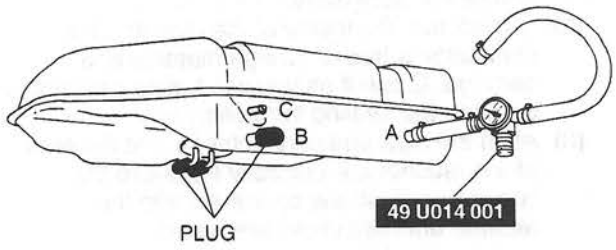

W6U114WB6

14. Verify that there is no airflow from port C when pressure of **+0.98 kPa {+7.4 mmHg, +0.29 inHg}** is applied to port A.
15. If there is airflow, replace the fuel tank.

FUEL SHUT-OFF VALVE INSPECTION

W6U114W18

Note

- The fuel shut-off valve is located in the fuel tank.
- Carry out the "FUEL TANK INSPECTION". (Refer to 01–14 FUEL TANK INSPECTION.)

NONRETURN VALVE INSPECTION

W6U114W04

1. Remove the fuel-filler pipe. (Refer to 01–14 FUEL TANK REMOVAL/INSTALLATION.)
2. Verify that the projection on the nonreturn valve is aligned with the notch on the fuel-filler pipe.

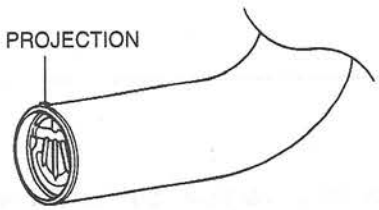

W6U114WB7

3. If not, remove the nonreturn valve and align the projection with the notch, then reinstall.
4. Verify that the nonreturn valve is closed when the fuel-filler pipe end is held up vertically.
5. If it opens, replace the nonreturn valve.
6. Verify that the nonreturn valve opens under its own weight when the fuel-filler pipe end is held down vertically.

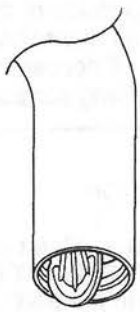

W6U114WB8

7. If it does not open, replace the nonreturn valve.

FUEL PUMP REMOVAL/INSTALLATION

W6U114W05

1. Complete the "BEFORE REPAIR PROCEDURE". (Refer to 01–14 BEFORE REPAIR PROCEDURE.)
2. Disconnect the negative battery cable.
3. Remove the fuel tank. (Refer to 01–14 FUEL TANK REMOVAL/INSTALLATION.)
4. Remove in the order indicated in the table.
5. Install in the reverse order of removal.
6. Complete the "AFTER REPAIR PROCEDURE". (Refer to 01–14 AFTER REPAIR PROCEDURE.)

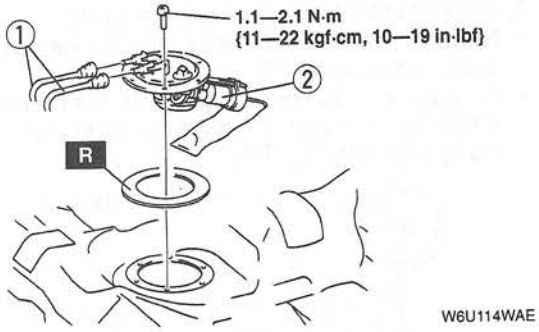

W6U114WAE

1 •	Fuel pipe ☞ Disassembly/Assembly Note
2	Fuel pump

Fuel Pipe Disassembly/Assembly Note
(Refer to 01–14 FUEL TANK REMOVAL/INSTALLATION, Fuel Pipe Disassembly/Assembly Note.)

FUEL PUMP INSPECTION

W6U114W06

Fuel Pump Continuity

1. Disconnect the fuel pump connector.
2. Inspect continuity between fuel pump connector terminals A and D.

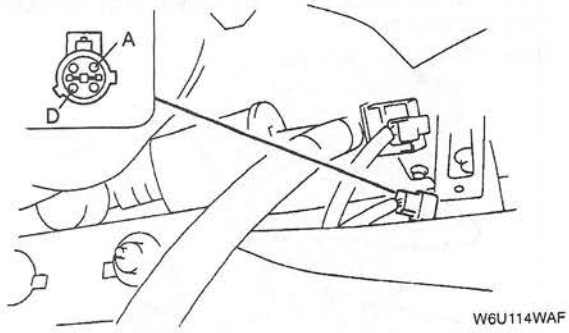

W6U114WAF

3. If there is no continuity, carry out the "Fuel Pump Maximum Pressure Inspection".

Fuel Pump Maximum Pressure Inspection

Warning

- **Fuel line spills and leaks are dangerous. Fuel can ignite and cause serious injuries or death and damage. Always carry out the following procedure with the engine stopped.**

1. Complete the "BEFORE REPAIR PROCEDURE". (Refer to 01–14 BEFORE REPAIR PROCEDURE.)
2. Disconnect the negative battery cable.
3. Remove the cruise actuator with the harness and cable connected. [FS]
4. Connect a fuel pressure gauge to the fuel filter [FS] or the main fuel pipe [KL] and plug the outlet of the gauge as shown. (Install clamps as shown.)

FS

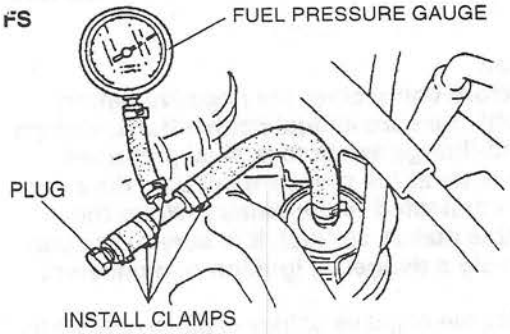

W6U114WAG

KL

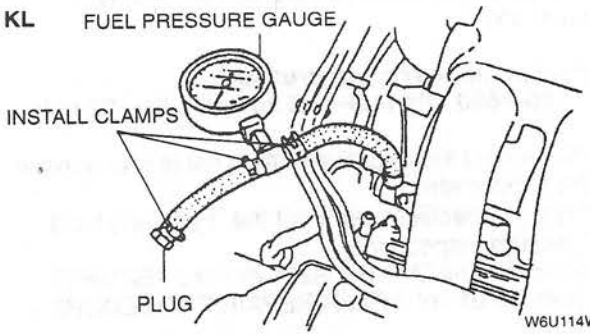

W6U114WNG

5. Remove the fuel pump relay.

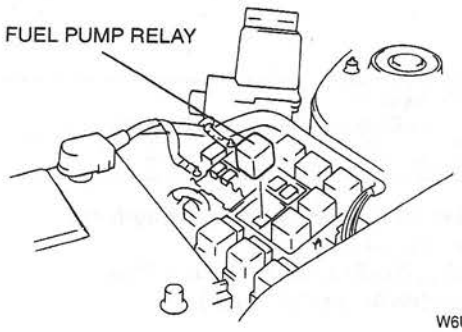

W6U114WQ1

Caution
- **Connecting the wrong fuel pump relay socket terminals may possibly cause a malfunction. Carefully connect the specified terminals only.**

6. Connect fuel pump relay socket terminals 30 and 87 by using a jumper wire.

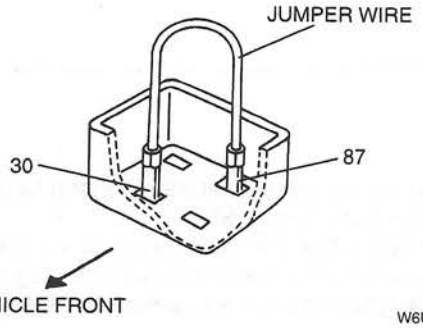

W6U114WNH

Caution
- **Before connecting the negative battery cable be sure all fuel connections, clamps and fittings are secure. Fuel pump will operate at full pressure anytime the cable is connected to the battery. When the cable makes contact, it is sure to arc and create a danger of ignition or explosion.**

7. Connect the negative battery cable to operate the fuel pump. Measure the fuel pump maximum pressure.

   Fuel pump maximum pressure
   480—630 kPa {4.8—6.5 kgf/cm^2, 69—92 psi}

8. Disconnect the negative battery cable and remove the jumper wire.
9. If not as specified, carry out the "Fuel Line Hold Pressure Inspection".
10. Complete the "AFTER REPAIR PROCEDURE". (Refer to 01–14 AFTER REPAIR PROCEDURE.)

Fuel Line Hold Pressure Inspection

Warning
- **Fuel line spills and leaks are dangerous. Fuel can ignite and cause serious injuries or death and damage. Always carry out the following procedure with the engine stopped.**

1. Complete the "BEFORE REPAIR PROCEDURE". (Refer to 01–14 BEFORE REPAIR PROCEDURE.)
2. Disconnect the negative battery cable.
3. Remove the cruise actuator with the harness and cable connected. [FS]
4. Connect a fuel pressure gauge to the fuel filter and plug the outlet of the gauge as shown. (Install clamps as shown.) [FS]

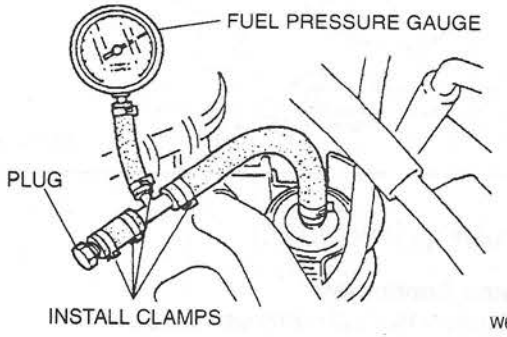

W6U114WAJ

5. Connect a fuel pressure gauge between the fuel distributors RH and LH as shown. (Install clamps as shown.) [KL]

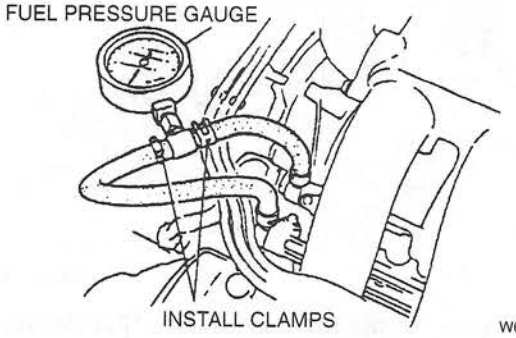

W6U114WNJ

6. Remove the fuel pump relay.

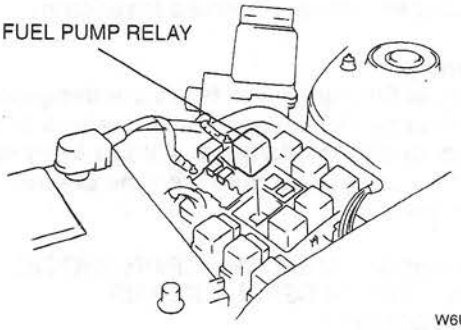

W6U114WQ2

Caution
- **Connecting the wrong fuel pump relay socket terminals may possibly cause a malfunction. Carefully connect the specified terminals only.**

7. Connect fuel pump relay socket terminals 30 and 87 by using a jumper wire.

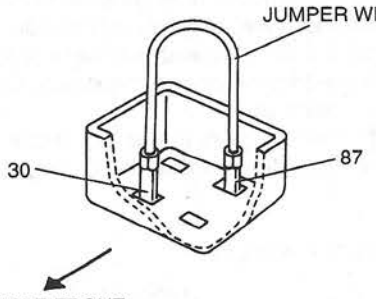

W6U114WNK

Caution
- **Before connecting the negative battery cable be sure all fuel connections, clamps and fittings are secure. Fuel pump will operate at full pressure anytime the cable is connected to the battery. When the cable makes contact, it is sure to arc and create a danger of ignition or explosion.**

8. Connect the negative battery cable for **10 seconds** to operate the fuel pump.
9. Disconnect the negative battery cable and remove the jumper wire.
10. Observe the fuel pressure **after 5 minutes**.

Fuel pressure
FS: More than 343 kPa {3.50 kgf/cm^2, 49.8 psi}
KL: More than 147 kPa {1.50 kgf/cm^2, 21.3 psi}

11. If not as specified, replace the fuel pump.
12. Complete the "AFTER REPAIR PROCEDURE". (Refer to 01–14 AFTER REPAIR PROCEDURE.)

FUEL FILTER (HIGH-PRESSURE SIDE) REMOVAL/INSTALLATION

1. Complete the "BEFORE REPAIR PROCEDURE". (Refer to 01–14 BEFORE REPAIR PROCEDURE.)
2. Disconnect the negative battery cable.
3. Remove the cruise actuator with the harness and cable connected. [FS]
4. Remove the air cleaner and air hose. [KL]
5. Remove in the order indicated in the table.
6. Install in the reverse order of removal.
7. Complete the "AFTER REPAIR PROCEDURE". (Refer to 01–14 AFTER REPAIR PROCEDURE.)

W6U114W08

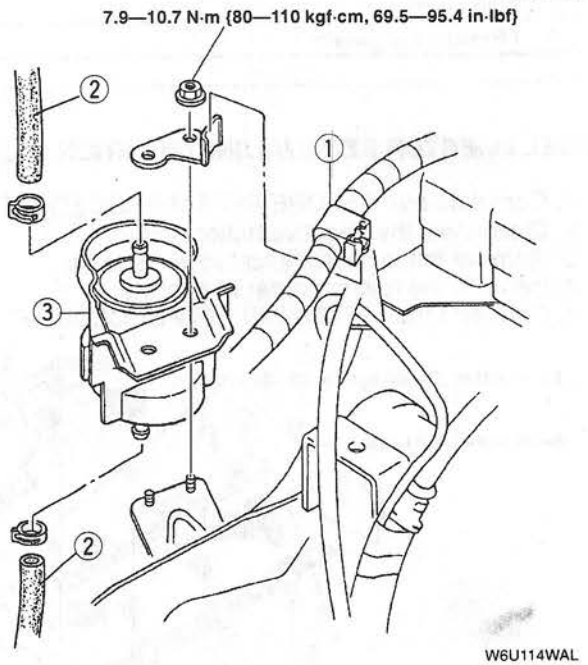

W6U114WAL

1	Harness
2	Fuel hose
3	Fuel filter (high-pressure side)

FUEL INJECTOR REMOVAL/INSTALLATION [FS]

W6U114W10

1. Complete the "BEFORE REPAIR PROCEDURE". (Refer to 01–14 BEFORE REPAIR PROCEDURE.)
2. Disconnect the negative battery cable.
3. Remove in the order indicated in the table.
4. Install in the reverse order of removal.
5. Complete the "AFTER REPAIR PROCEDURE". (Refer to 01–14 AFTER REPAIR PROCEDURE.)

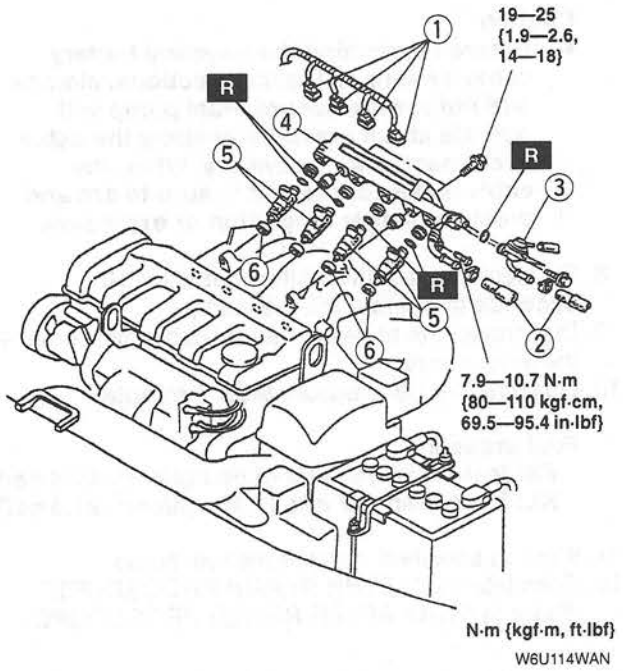

1	Fuel injector connector
2	Fuel hose
3	Pressure regulator
4	Fuel distributor
5	Fuel injector ☞ Installation Note
6	Fuel injector insulator

Fuel Injector Installation Note

1. Use new fuel injector O-rings.
2. Apply a small amount of engine oil to the O-rings and install them into the fuel distributor.
3. Verify that the O-rings and the fuel injector sealing surfaces are free of foreign materials. Clean with gasoline if necessary.
4. Install the fuel injectors in the fuel distributor with light twisting motion so that the O-rings will not be folded.

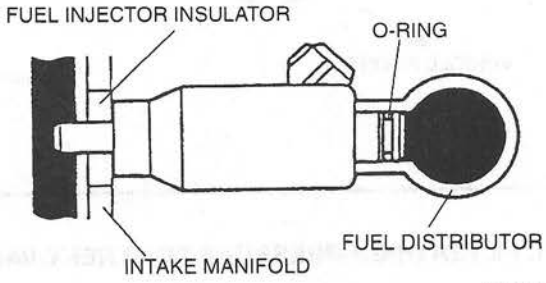

FUEL INJECTOR REMOVAL/INSTALLATION [KL]

W6U114W0J

1. Complete the "BEFORE REPAIR PROCEDURE". (Refer to 01–14 BEFORE REPAIR PROCEDURE.)
2. Disconnect the negative battery cable.
3. Remove in the order indicated in the table.
4. Install in the reverse order of removal.
5. Complete the "AFTER REPAIR PROCEDURE". (Refer to 01–14 AFTER REPAIR PROCEDURE.)

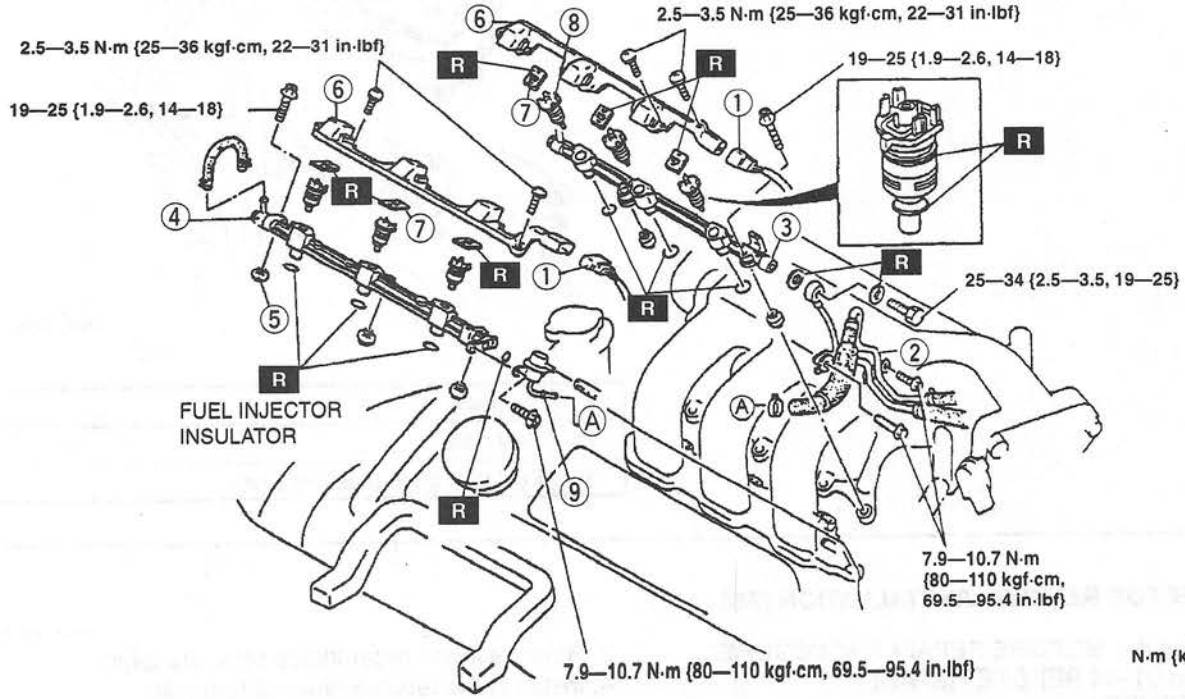

1	Connector
2	Fuel hose and fuel pipe
3	Fuel distributor (RH) ☞ Installation Note
4	Fuel distributor (LH) ☞ Installation Note
5	Insulator
6	Accumulated connector
7	Spacer
8	Fuel injector ☞ Installation Note
9	Pressure regulator

Fuel Distributor Installation Note

1. Install new fuel injector insulators.
2. Install the insulators, making sure that each is pressed in fully, and that it is not twisted or bent. Incorrectly installed insulators can cause rough idle.

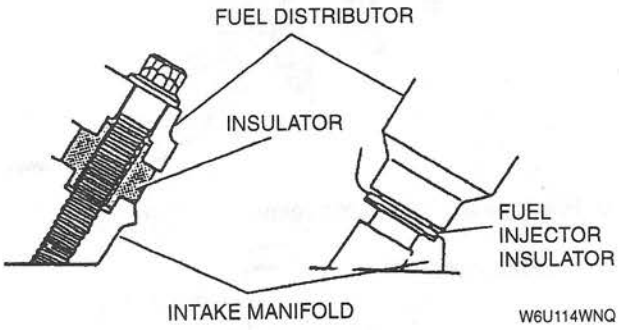

3. Verify that the fuel distributor is clean.
4. Clean the fuel distributor with gasoline, if necessary.
5. Install the fuel injector squarely into the fuel distributor while turning it back and forth.
6. Fit the fuel injector tab into the notch in the fuel distributor.
7. Install the harness.

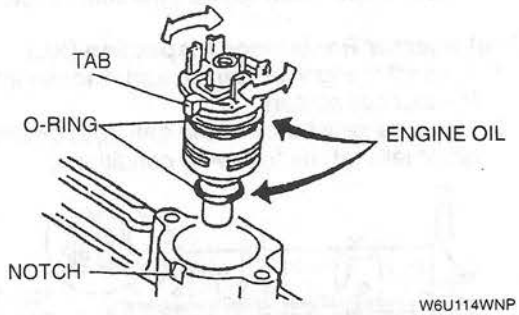

Fuel Injector Installation Note

1. Install new O-rings.
2. Apply a small amount of clean engine oil to the O-rings before installing them.

FUEL INJECTOR INSPECTION

W6U114W09

On-vehicle

1. Warm up the engine and let it idle.
2. Listen for operational sound of each fuel injector with a screwdriver or a sound scope.

Note

- The best way to judge the performance of a fuel injector is to compare its sound with the sound of other fuel injectors.

FS

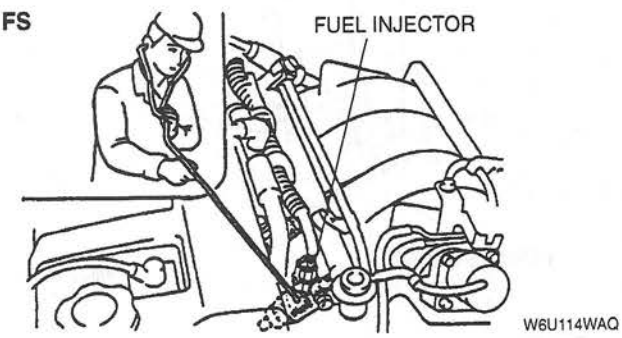

KL

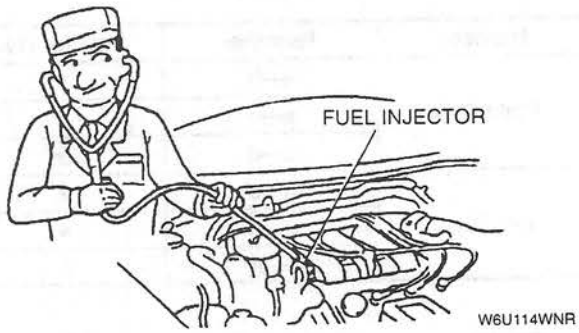

3. If no sound is heard, carry out the fuel leakage test.

Fuel Injector Resistance Inspection [FS]

1. Disconnect the fuel injector connectors.
2. Measure the resistance of the fuel injector.

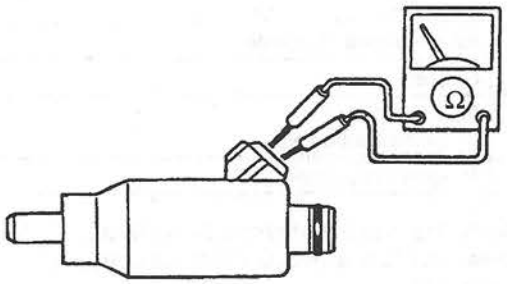

W6U114WAM

Resistance
12—16 Ω (at 20 °C {68 °F})

3. If not as specified, replace the fuel injector.

Fuel Injector Resistance Inspection [KL]

1. Turn off the ignition switch and disconnect the fuel injector connectors.
2. Measure resistance of the fuel injector with an ohmmeter at the following conditions.

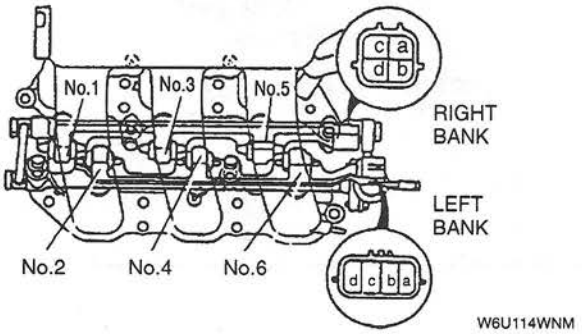

W6U114WNM

Harness	Terminal	Injector No.
Right Bank	a—b	1
	a—c	5
	a—d	3
Left Bank	d—c	2
	d—b	4
	d—a	6

Resistance
12—16 Ω [20 °C {68 °F}]

3. If not as specified, inspect continuity of the harness and inspect for poor connection.
4. If the harness is okay, replace the fuel injector.

Fuel Leakage Test [FS]

Warning

- **Fuel line spills and leaks are dangerous. Fuel can ignite and cause serious injuries or death and damage. Always carry out the following procedure with the engine stopped.**

1. Complete the "BEFORE REPAIR PROCEDURE". (Refer to 01–14 BEFORE REPAIR PROCEDURE.)
2. Disconnect the negative battery cable.
3. Remove the fuel injectors together with the fuel distributor. (Refer to 01–14 FUEL INJECTOR REMOVAL/INSTALLATION [FS].)
4. Fasten the fuel injectors firmly to the fuel distributor with wire.

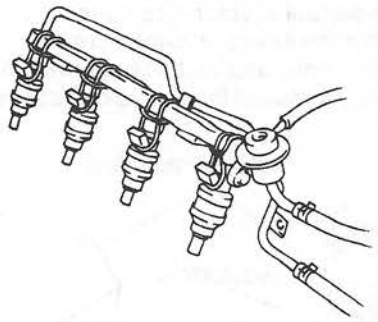

W6U114WAR

5. Remove the fuel pump relay.

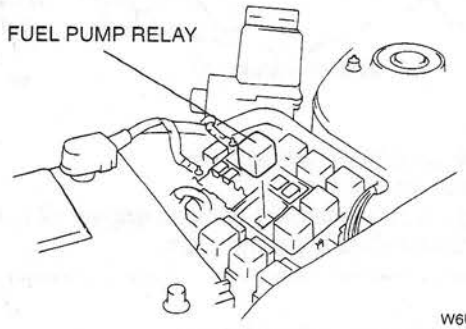

W6U114WQ3

Caution

- **Connecting the wrong fuel pump relay socket terminals may possibly cause a malfunction. Carefully connect the specified terminals only.**

6. Connect the fuel pump relay socket terminals 30 and 87 by using a jumper wire.

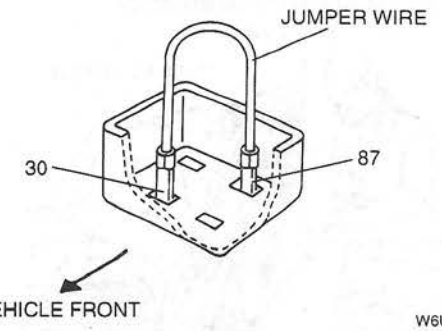

W6U114WAS

Caution

- **Before connecting the negative battery cable be sure all fuel connections, clamps and fittings are secure. Fuel pump will operate at full pressure anytime the cable is connected to the battery. When the**

cable makes contact, it is sure to arc and create a danger of ignition or explosion.

7. Connect the negative battery cable to operate the fuel pump.
8. Tilt the fuel injectors **approx. 60 degrees** and verify that there is no fuel leaks from the fuel injector nozzles.

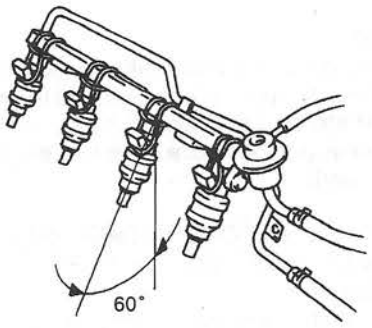

W6U114WAT

Fuel leakage
Less than 1 drop/2 minutes

9. If fuel leaks more than specified, carry out the volume test.
10. Disconnect the negative battery cable and remove the jumper wire.
11. If not as specified, carry out the "Volume Test [FS]".
12. Complete the "AFTER REPAIR PROCEDURE". (Refer to 01–14 AFTER REPAIR PROCEDURE.)

Fuel Leakage Test [KL]

Warning
- **Fuel line spills and leaks are dangerous. Fuel can ignite and cause serious injuries or death and damage. Always carry out the following procedure with the engine stopped.**

1. Complete the "BEFORE REPAIR PROCEDURE". (Refer to 01–14 BEFORE REPAIR PROCEDURE.)
2. Disconnect the negative battery cable.
3. Remove the fuel distributor component from the intake manifold. (Refer to 01–14 FUEL INJECTOR REMOVAL/INSTALLATION [KL].)
4. Connect the fuel hoses.

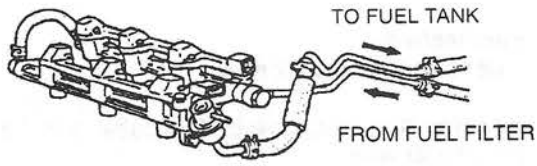

W6U114WNS

5. Remove the fuel pump relay.

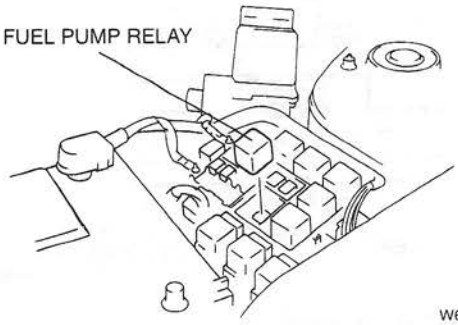

W6U114WQ4

Caution
- **Connecting the wrong fuel pump relay socket terminals may possibly cause a malfunction. Carefully connect the specified terminals only.**

6. Connect the fuel pump relay socket terminals 30 and 87 by using a jumper wire.

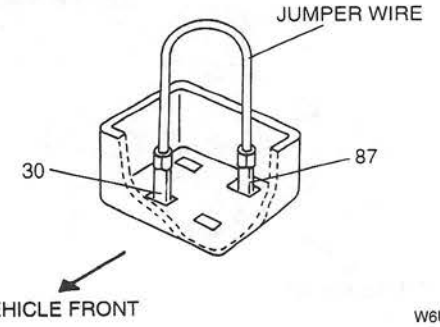

W6U114WNT

Caution
- **Before connecting the negative battery cable be sure all fuel connections, clamps and fittings are secure. Fuel pump will operate at full pressure anytime the cable is connected to the battery. When the cable makes contact, it is sure to arc and create a danger of ignition or explosion.**

7. Connect the negative battery cable to operate the fuel pump and inspect for fuel leaks from the fuel injectors.

Fuel leakage
Less than 1 drop/2 min.

8. Disconnect the negative battery cable and remove the jumper wire.
9. If not as specified, remove the leaking fuel injector and inspect the O-rings and fuel distributor for damage. Replace as necessary.

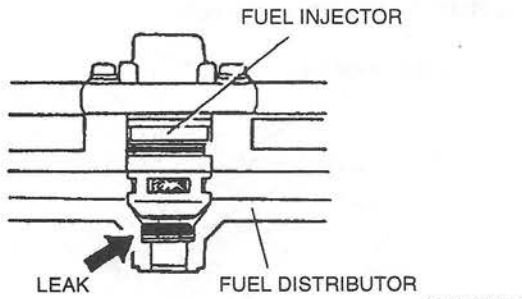

10. Install the fuel injector.

Caution
- **Connecting the wrong fuel pump relay socket terminals may possibly cause a malfunction. Carefully connect the specified terminals only.**

11. Connect fuel pump relay socket terminals 30 and 87 by using a jumper wire.

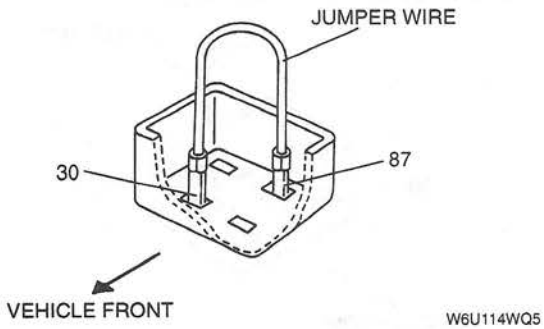

Caution
- **Before connecting the negative battery cable be sure all fuel connections, clamps and fittings are secure. Fuel pump will operate at full pressure anytime the cable is connected to the battery. When the cable makes contact, it is sure to arc and create a danger of ignition or explosion.**

12. Connect the negative battery cable to operate the fuel pump and inspect for fuel leaks from fuel injector.
13. Disconnect the negative battery cable and remove the jumper wire.
14. If not as specified, carry out the "Volume Test [KL]".
15. Complete the "AFTER REPAIR PROCEDURE". (Refer to 01–14 AFTER REPAIR PROCEDURE.)

Volume Test [FS]

Warning
- **Fuel line spills and leaks are dangerous. Fuel can ignite and cause serious injuries or death and damage. Always carry out the following procedure with the engine stopped.**

1. Complete the "BEFORE REPAIR PROCEDURE". (Refer to 01–14 BEFORE REPAIR PROCEDURE.)
2. Disconnect the negative battery cable.
3. Remove the fuel injectors together with the fuel distributor.
4. Fasten the fuel injectors firmly to the fuel distributor with wire and connect the fuel hoses.
5. Connect the **SST** as shown in the figure.

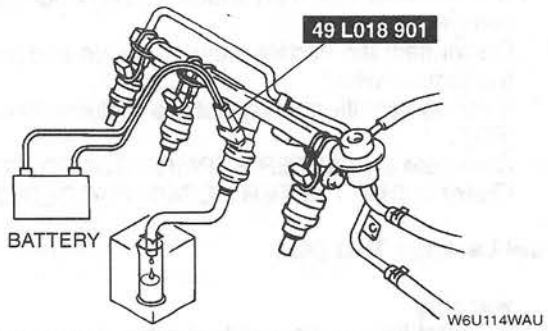

6. Remove the fuel pump relay.

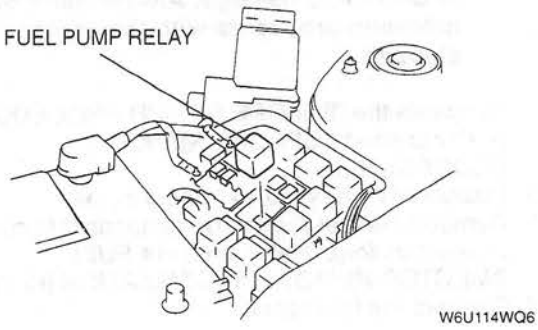

Caution
- **Connecting the wrong fuel pump relay socket terminals may possibly cause a malfunction. Carefully connect the specified terminals only.**

7. Connect the fuel pump relay socket terminals 30 and 87 by using a jumper wire.

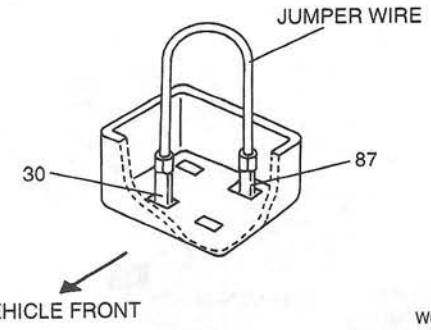

Caution
- **Before connecting the negative battery cable be sure all fuel connections, clamps and fittings are secure. Fuel pump will operate at full pressure anytime the cable is connected to the battery. When the cable makes contact, it is sure to arc and create a danger of ignition or explosion.**

8. Connect the negative battery cable to operate the fuel pump.
9. Measure the injection volume of each fuel injector by using a graduated container.

Injection volume
47—68 ml {47—68 cc, 1.4—2.0 fl oz}/15 sec.

10. Disconnect the negative battery cable and remove the jumper wire.
11. If not as specified, replace the fuel injector.
12. Complete the "AFTER REPAIR PROCEDURE". (Refer to 01–14 AFTER REPAIR PROCEDURE.)

Volume Test [KL]

Warning
- **Fuel line spills and leaks are dangerous. Fuel can ignite and cause serious injuries or death and damage. Always carry out the following procedure with the engine stopped.**

1. Complete the "BEFORE REPAIR PROCEDURE". (Refer to 01–14 BEFORE REPAIR PROCEDURE.)
2. Disconnect the negative battery cable.
3. Remove the fuel injectors and fuel distributor component.
4. Connect the **SST** as shown in the figure.

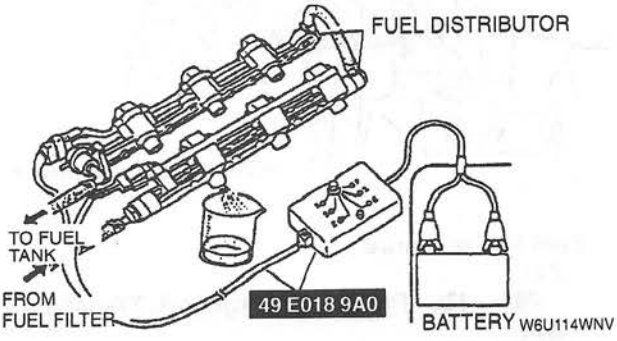

5. Remove the fuel pump relay.

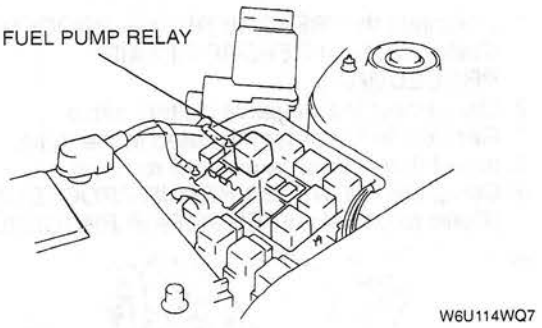

Caution
- **Connecting the wrong fuel pump relay socket terminals may possibly cause a malfunction. Carefully connect the specified terminals only.**

6. Connect fuel pump relay socket terminals 30 and 87 by using a jumper wire.

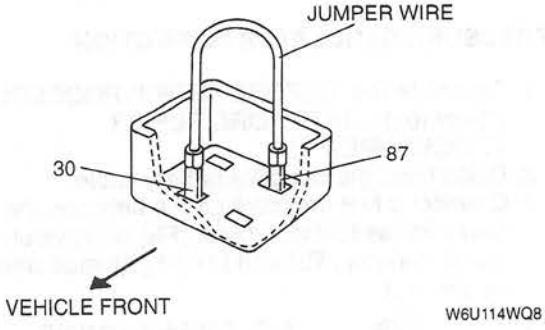

Caution
- **Before connecting the negative battery cable be sure all fuel connections, clamps and fittings are secure. Fuel pump will operate at full pressure anytime the cable is connected to the battery. When the cable makes contact, it is sure to arc and create a danger of ignition or explosion.**

7. Connect the negative battery cable to operate the fuel pump.
8. Measure the injection volume of each fuel injector by using a graduated container.

Injection volume
48—56 ml {48—56 cc, 1.7—1.8 fl oz}/15 sec.

9. Disconnect the negative battery cable and remove the jumper wire.
10. If not as specified, replace the fuel injector.
11. Complete the "AFTER REPAIR PROCEDURE". (Refer to 01–14 AFTER REPAIR PROCEDURE.)

PRESSURE REGULATOR REMOVAL/INSTALLATION

W6U114W12

1. Complete the "BEFORE REPAIR PROCEDURE." (Refer to 01–14 BEFORE REPAIR PROCEDURE.)
2. Disconnect the negative battery cable.
3. Remove in the order indicated in the table.
4. Install in the reverse order of removal.
5. Complete the "AFTER REPAIR PROCEDURE". (Refer to 01–14 AFTER REPAIR PROCEDURE.)

FS

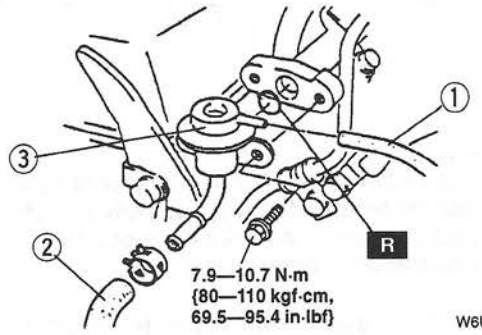

W6U114WAW

KL

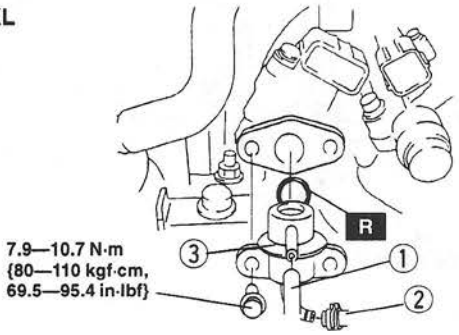

W6U114WQ0

1	Vacuum hose
2	Fuel return hose
3	Pressure regulator

PRESSURE REGULATOR INSPECTION

W6U114W13

1. Complete the "BEFORE REPAIR PROCEDURE". (Refer to 01–14 BEFORE REPAIR PROCEDURE.)
2. Disconnect the negative battery cable.
3. Connect a fuel pressure gauge between the fuel filter and the fuel distributor [FS] or between the fuel distributors RH and LH [KL]. (Install clamps as shown.)

FS

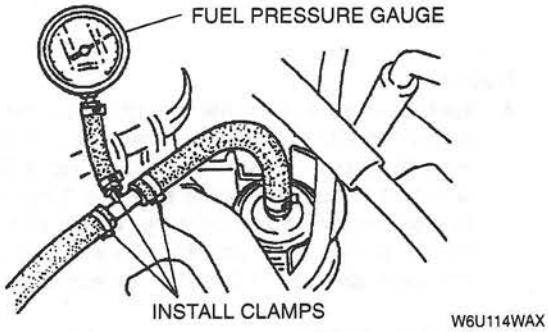

W6U114WAX

KL

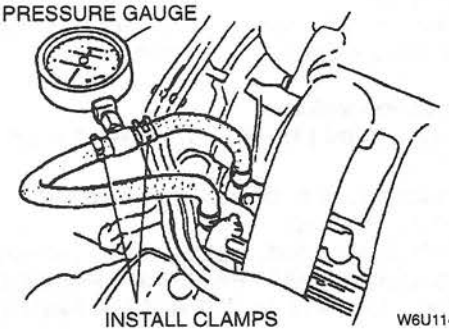

W6U114WNW

4. Connect the negative battery cable.
5. Start the engine and let it idle.
6. Measure the fuel line pressure **after approx. 2 minutes**.

Fuel line pressure
FS:
210—260 kPa {2.1—2.7 kgf/cm^2, 30—38 psi}
KL:
210—250 kPa {2.1—2.6 kgf/cm^2, 30—36 psi}

7. Disconnect the vacuum hose from the pressure regulator and measure the fuel line pressure.

FS

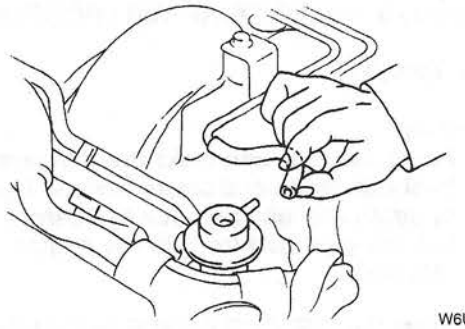

W6U114WAY

KL

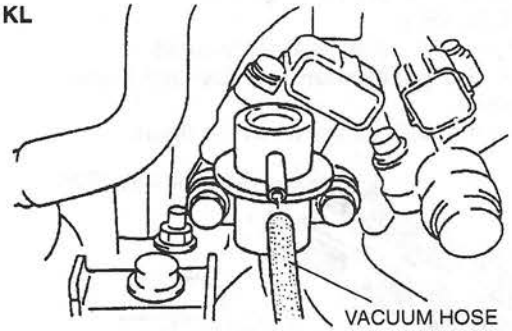

W6U114WNX

Fuel line pressure
FS:
260—320 kPa {2.6—3.3 kgf/cm^2, 37—46 psi}
KL:
270—310 kPa {2.7—3.2 kgf/cm^2, 39—45 psi}

8. If not as specified, replace the pressure regulator.

9. Complete the "AFTER REPAIR PROCEDURE". (Refer to 01–14 AFTER REPAIR PROCEDURE.)

PRC SOLENOID VALVE REMOVAL/INSTALLATION

W6U114W0N

1. Remove the PRC solenoid valve from the intake manifold [FS] or from the air cleaner [KL].

FS

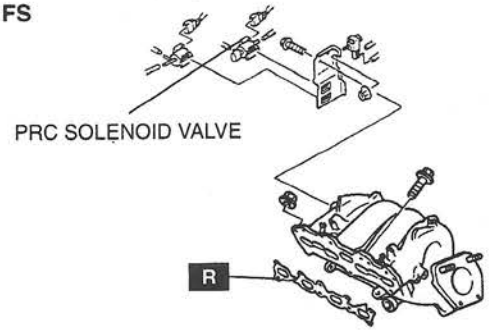

W6U114WB9

KL

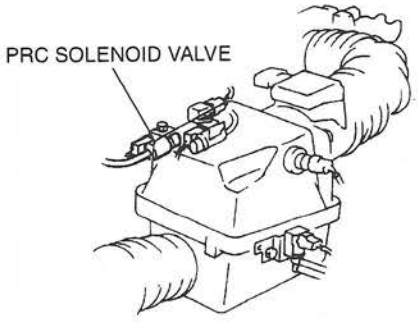

W6U114WNY

2. Install in the reverse order of removal.

PRC SOLENOID VALVE INSPECTION

W6U114W15

1. Remove the PRC solenoid valve.
2. Inspect airflow between each port under the following conditions.

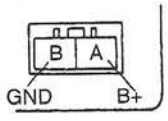

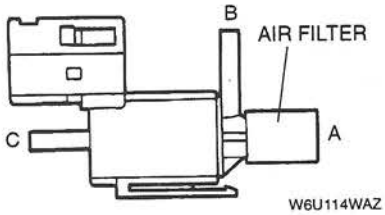

W6U114WAZ

○—○ : Continuity ○═○ : Airflow

Step	Terminal		Port		
	A	B	A	B	C
1	○—○			○═○	
2	B+	GND	○═○		

W6U114WB0

3. If not as specified, replace the PRC solenoid valve.

FUEL PUMP RELAY INSPECTION

W6U114W16

1. Remove the fuel pump relay.
2. Inspect continuity between the fuel pump relay terminals by using an ohmmeter.

○—○ : Continuity

Step	Terminal			
	A (86)	F (85)	B (87)	E (30)
1	○—○			
2	B+	GND	○—○	

W6U114WB1

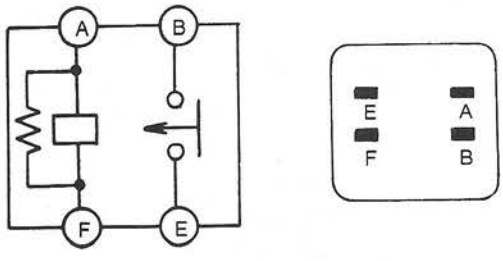

W6U114WB2

3. If not as specified, replace the fuel pump relay.

01–15 EXHAUST SYSTEM

EXHAUST SYSTEM INSPECTION 01–15–1
EXHAUST SYSTEM REMOVAL/INSTALLATION [FS] 01–15–1
EXHAUST SYSTEM REMOVAL/INSTALLATION [KL] 01–15–2

EXHAUST SYSTEM INSPECTION

W6U115W01

1. Start the engine and check each exhaust system component for exhaust gas leakage.
2. If leakage is found, repair or replace as necessary.

EXHAUST SYSTEM REMOVAL/INSTALLATION [FS]

W6U115W02

Warning
- **When the engine and exhaust system are hot, they can badly burn. Turn off the engine and wait until they are cool before removing or installing the exhaust system.**

1. Disconnect the negative battery cable.
2. Remove in the order indicated in the table.
3. Install in the reverse order of removal.

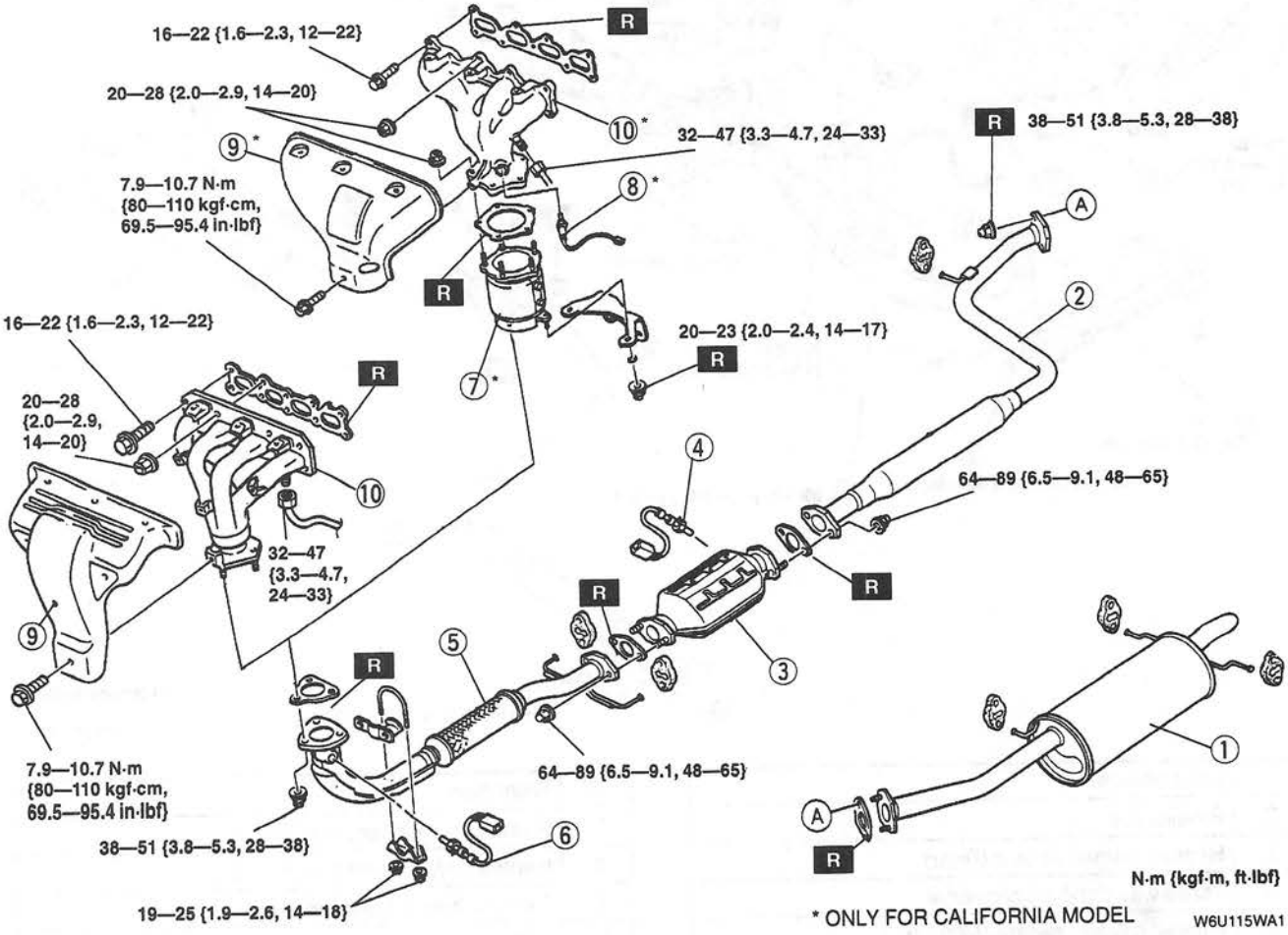

* ONLY FOR CALIFORNIA MODEL

W6U115WA1

1	Main silencer
2	Presilencer
3	Three way catalytic converter
4	Heated oxygen sensor (Rear (Except California))

5	Front pipe
6	Heated oxygen sensor (Rear (California only), Front (Except California))
7	Warm up three way catalytic converter (California only)

8	Heated oxygen sensor (Front (California only))
9	Exhaust manifold insulator
10	Exhaust manifold

EXHAUST SYSTEM REMOVAL/INSTALLATION [KL]

W6U115W52

Warning

- **When the engine and exhaust system are hot, they can badly burn. Turn off the engine and wait until they are cool before removing or installing the exhaust system.**

1. Disconnect the negative battery cable.
2. Remove in the order indicated in the table.
3. Install in the reverse order of removal.

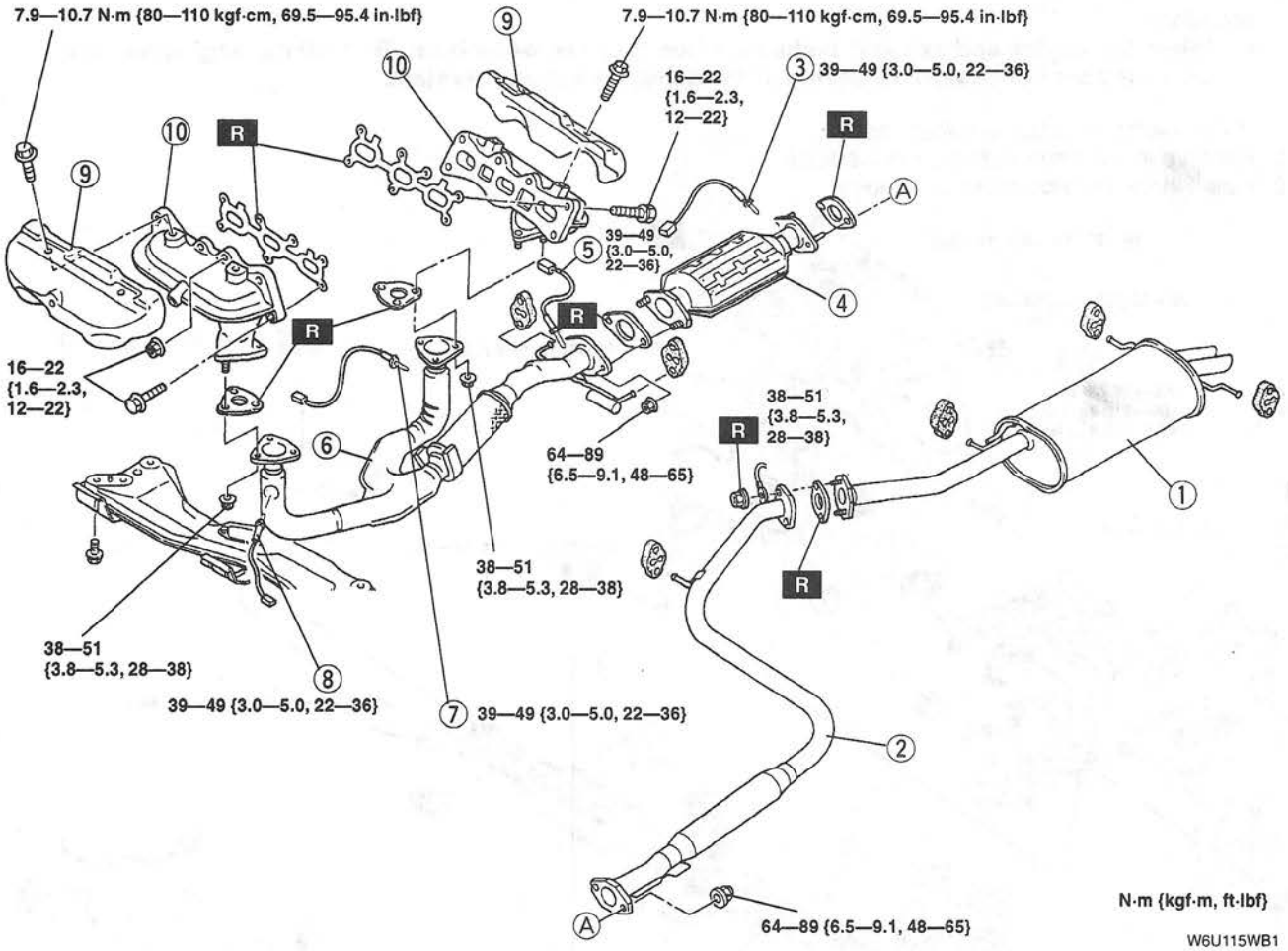

N·m {kgf·m, ft·lbf}

W6U115WB1

1	Main silencer
2	Presilencer
3	Heated oxygen sensor (Rear)
4	Three way catalytic converter
5	Heated oxygen sensor (Middle)

6	Front pipe
7	Heated oxygen sensor (Front RH)
8	Heated oxygen sensor (Front LH)
9	Exhaust manifold insulator
10	Exhaust manifold

01–16 EMISSION SYSTEM

EMISSION SYSTEM (ENGINE COMPARTMENT SIDE) COMPONENT LOCATION [FS] 01–16–1
EMISSION SYSTEM (ENGINE COMPARTMENT SIDE) COMPONENT LOCATION [KL] 01–16–2
EMISSION SYSTEM (FUEL TANK SIDE) COMPONENT REMOVAL/INSTALLATION 01–16–3
EVAPORATIVE GAS CHECK VALVE (TWO-WAY) INSPECTION 01–16–3
AIR FILTER INSPECTION 01–16–4
PRESSURE CONTROL VALVE INSPECTION 01–16–4
CHARCOAL CANISTER INSPECTION . 01–16–5
CANISTER DRAIN CUT VALVE (CDCV) INSPECTION 01–16–5
CATCH TANK INSPECTION 01–16–6
ROLLOVER VALVE INSPECTION 01–16–6
PURGE SOLENOID VALVE INSPECTION 01–16–6
EGR VALVE REMOVAL/INSTALLATION [FS] 01–16–6
EGR VALVE REMOVAL/INSTALLATION [KL] 01–16–7
Engine Coolant Hose Removal Note .. 01–16–7
EGR VALVE INSPECTION 01–16–7
On-vehicle Inspection 01–16–7
Off-vehicle Inspection 01–16–7
EGR BOOST SOLENOID VALVE INSPECTION 01–16–8
PCV VALVE INSPECTION 01–16–8

EMISSION SYSTEM (ENGINE COMPARTMENT SIDE) COMPONENT LOCATION [FS]

W6U116W01

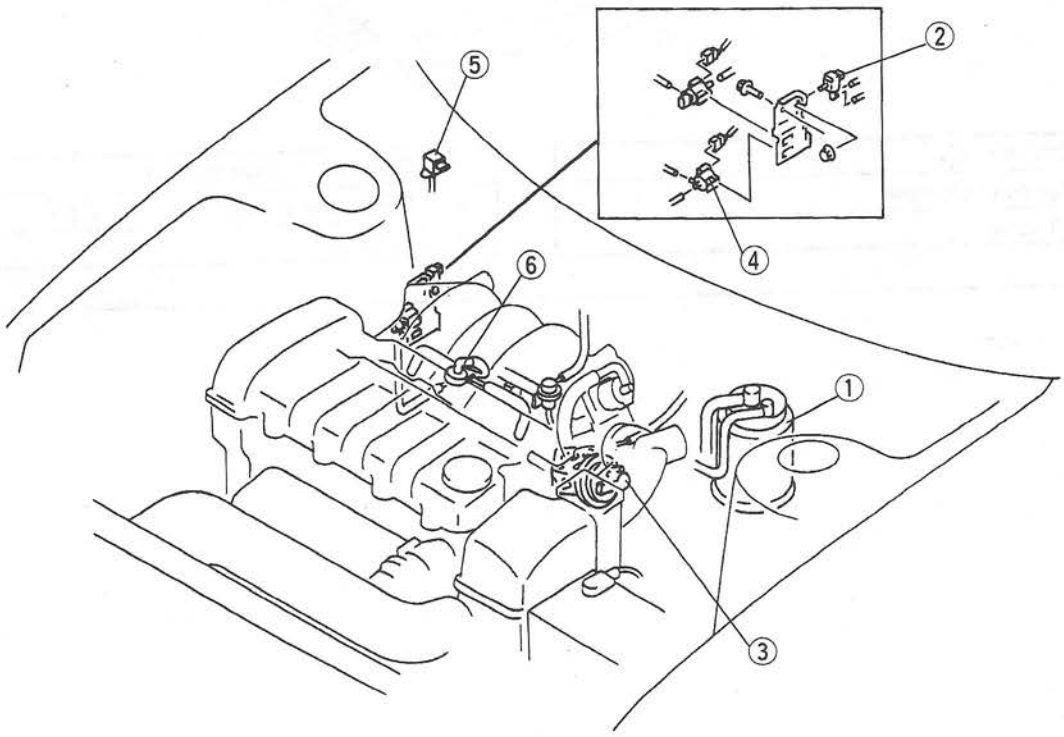

W6U116WA0

1	Catch tank
2	Purge solenoid valve
3	EGR valve

4	EGR boost solenoid valve
5	EGR boost sensor
6	PCV valve

EMISSION SYSTEM (ENGINE COMPARTMENT SIDE) COMPONENT LOCATION [KL]

W6U116W0A

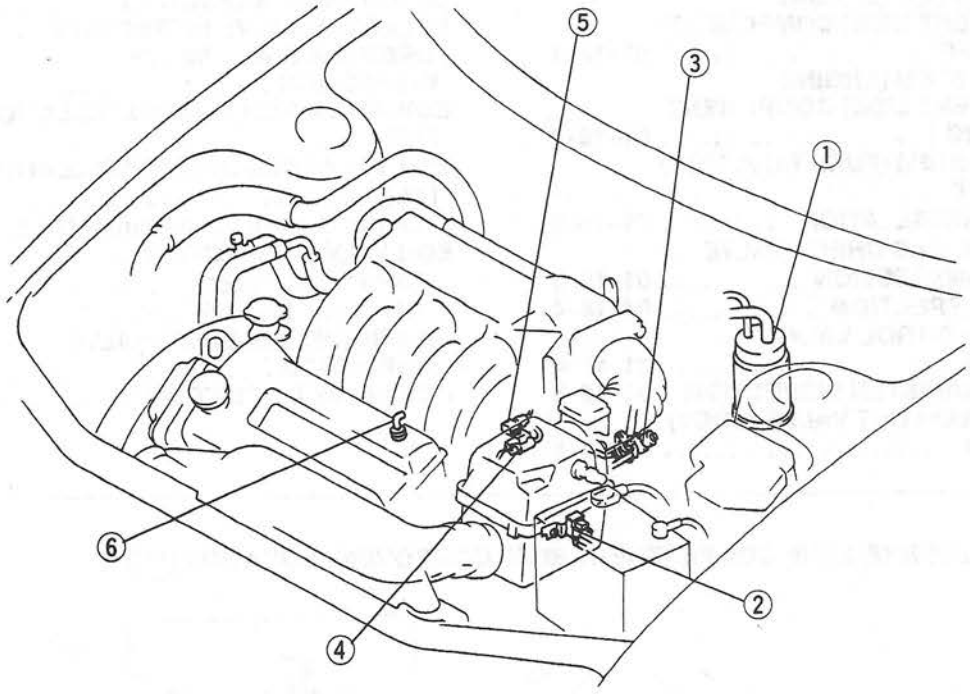

W6U116WN0

1	Catch tank
2	Purge solenoid valve
3	EGR valve

4	EGR boost solenoid valve
5	EGR boost sensor
6	PCV valve

EMISSION SYSTEM (FUEL TANK SIDE) COMPONENT REMOVAL/INSTALLATION

W6U116W02

1. Remove the fuel tank. (Refer to 01–14 FUEL TANK REMOVAL/INSTALLATION.)
2. Remove the components indicated in the table.
3. Install in the reverse order of removal.

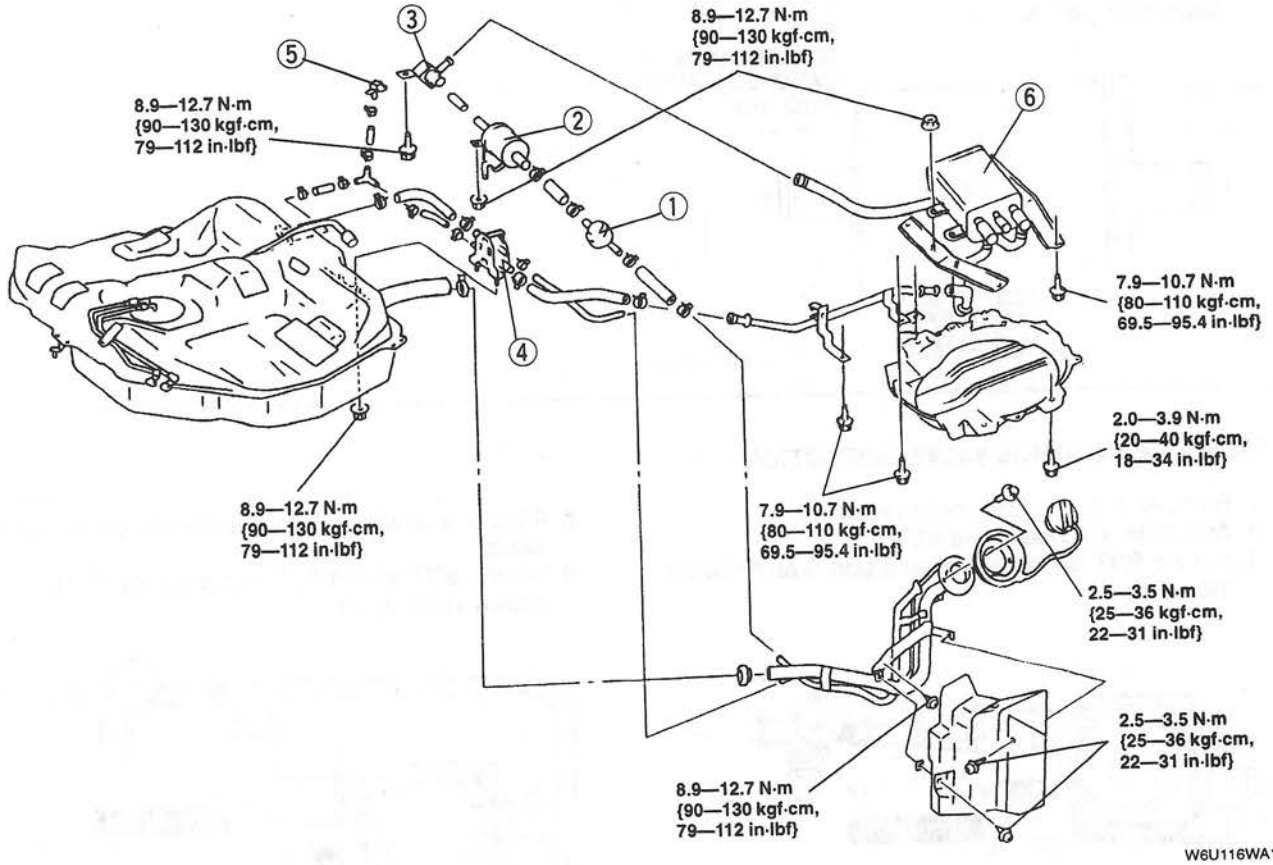

W6U116WA1

1	Evaporative gas check valve (two-way)
2	Air filter
3	Canister drain cut valve (CDCV)

4	Pressure control valve
5	Fuel tank pressure sensor
6	Charcoal canister

EVAPORATIVE GAS CHECK VALVE (TWO-WAY) INSPECTION

W6U116W03

1. Remove the check valve (two-way).
2. Attach an air hose to the **SST**.
3. Set the **SST** to port A as shown in the figure.

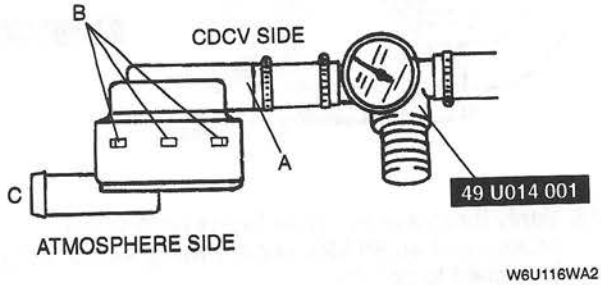

W6U116WA2

4. Verify that there is airflow from port B when pressure of **+0.98 kPa {+7.4 mmHg, +0.29 inHg}** is applied to port A.
5. Verify that there is airflow from port A when pressure of **+0.98 kPa {+7.4 mmHg, +0.29 inHg}** is applied to port C.
6. If there is no airflow, replace the evaporative gas check valve (two-way).

AIR FILTER INSPECTION

W6U116W04

1. Remove the air filter.
2. Blow air into port A and verify that air smoothly flows from port B.
3. Blow air into port B and verify that air smoothly flows from port A.
4. If not as specified, replace the air filter.

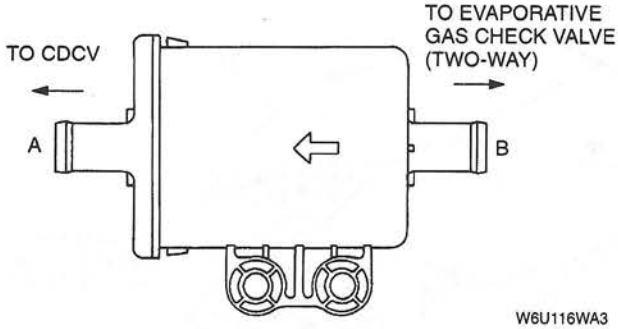

W6U116WA3

PRESSURE CONTROL VALVE INSPECTION

W6U116W05

1. Remove the pressure control valve.
2. Attach an air hose to the **SST**.
3. Set the **SST** to port A and plug port B as shown in the figure.
4. Verify that there is airflow from port D when pressure of **+0.98 kPa {+7.4 mmHg, +0.29 inHg}** is applied to port A.
5. If there is no airflow, replace the pressure control valve.
6. Set the **SST** to port B, C and plug port A as shown in the figure.
7. Verify that there is airflow from port D when pressure of **+0.98 kPa {+7.4 mmHg, +0.29 inHg}** is applied to port B, C.
8. If there is no airflow, replace the pressure control valve.
9. Set the **SST** to port A, C and plug port B as shown in the figure.
10. Verify that there is no airflow from port D when pressure of **+0.98 kPa {+7.4 mmHg, +0.29 inHg}** is applied to port A, C.
11. If there is airflow, replace the pressure control valve.
12. Set the **SST** to port D and plug port B.
13. Verify that there is airflow from port A when pressure of **+0.98 kPa {+7.4 mmHg, +0.29 inHg}** is applied to port D.
14. If there is no airflow, replace the pressure control valve.

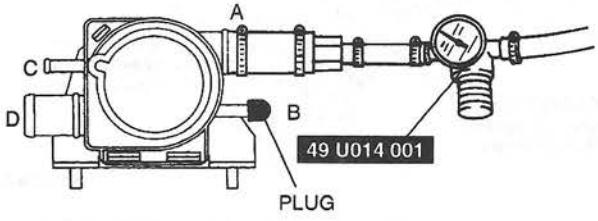

W6U116WA4

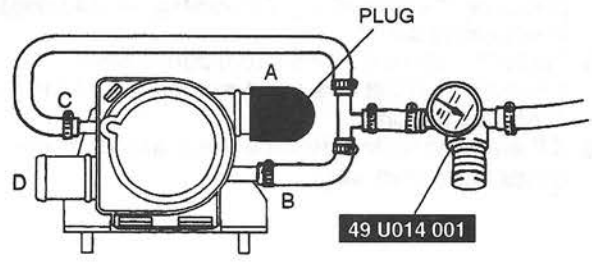

W6U116WA5

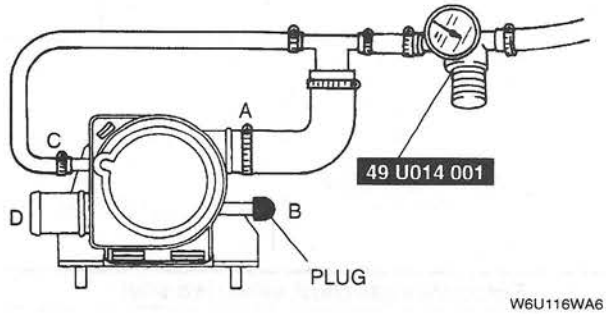

W6U116WA6

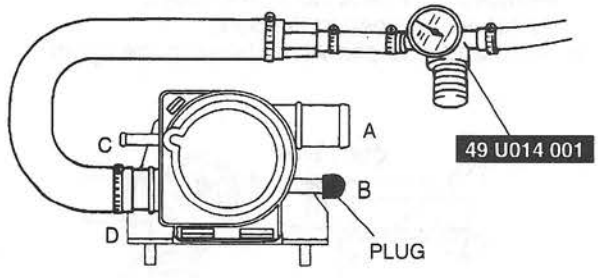

W6U116WA7

15. Set the **SST** to port B as shown in the figure.

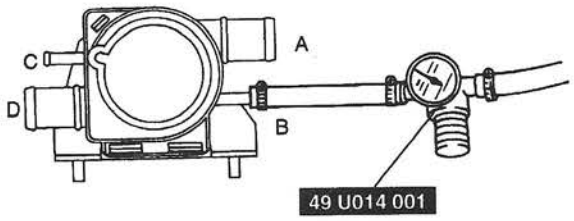

W6U116WA8

16. Verify that there is airflow from port D when pressure of **+0.98 kPa {+7.4 mmHg, +0.29 inHg}** is applied to port B.

Note
- Airflow amount is small on this step.

17. If there is no airflow, replace the pressure control valve.

CHARCOAL CANISTER INSPECTION

W6U116W06

1. Remove the charcoal canister.
2. Plug ports A and B, then blow air into port C.
3. Verify that there is no air leakage.

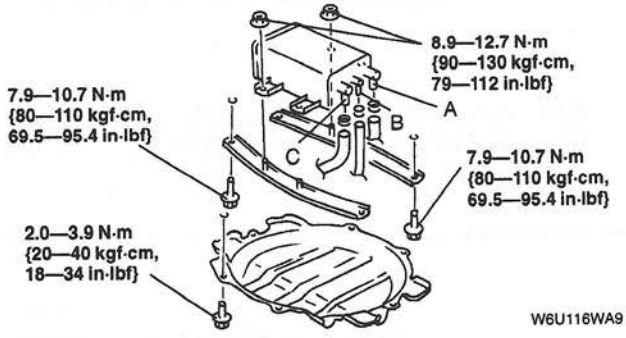

W6U116WA9

4. If not as specified, replace the charcoal canister.

CANISTER DRAIN CUT VALVE (CDCV) INSPECTION

W6U116W07

1. Remove the CDCV.
2. Inspect airflow between the ports of the CDCV.

○—○ : Continuity ○═○ : Airflow

Step	Terminal		Port	
	A	B	A	B
1	○—○		○═○	
2	B+	GND		

W6U116WAA

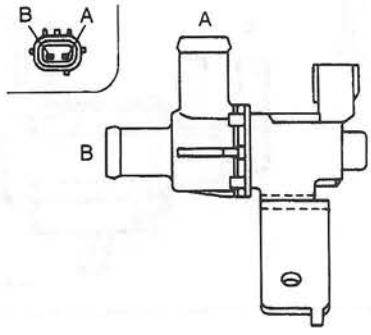

W6U116WAB

3. If not as specified, replace the CDCV.

CATCH TANK INSPECTION

W6U116W08

1. Remove the catch tank.
2. Plug the charcoal canister side port of the catch tank.
3. Blow air into the catch tank from the purge solenoid valve side port and verify that there is no air leakage.

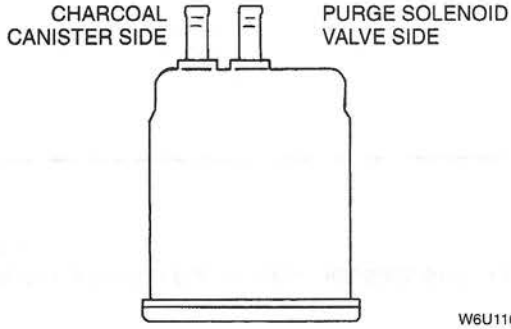

W6U116WAC

4. If there is air leakage, replace the catch tank.

ROLLOVER VALVE INSPECTION

W6U116W14

Note
- Two rollover valves are located in the fuel tank.

- Carry out the "FUEL TANK INSPECTION". (Refer to 01–14 FUEL TANK INSPECTION.)

PURGE SOLENOID VALVE INSPECTION

W6U116W09

1. Remove the purge solenoid valve.
2. Inspect airflow of the valve under the following conditions.

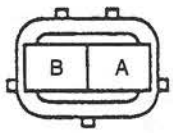

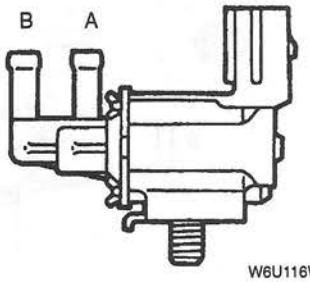

W6U116WAD

○—○ : Continuity ○═○ : Airflow

Step	Terminal		Port	
	A	B	A	B
1	○—○			
2	B+	GND	○═○	

W6U116WAE

3. If not as specified, replace the purge solenoid valve.

EGR VALVE REMOVAL/INSTALLATION [FS]

W6U116W10

1. Remove in the order indicated in the table.
2. Install in the reverse order of removal.

1	EGR valve connector
2	EGR valve

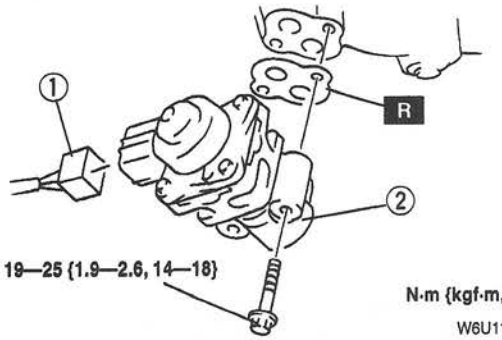

N·m {kgf·m, ft·lbf}

W6U116WAF

EGR VALVE REMOVAL/INSTALLATION [KL]

W6U116W0K

Warning

- **Do not remove the EGR valve with the engine hot. Engine coolant in the EGR valve may badly burn or injure. Always remove and install the EGR valve when the engine is cold.**

1. Remove in the order indicated in the table.
2. Install in the reverse order of removal.

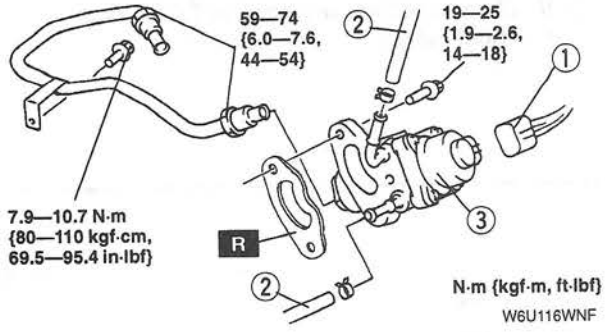

W6U116WNF

1	EGR valve connector
2	Engine coolant hose ☞ Removal Note
3	EGR valve

Engine Coolant Hose Removal Note

- To avoid engine coolant leakage, plug the engine coolant hose after disconnecting.

EGR VALVE INSPECTION

W6U116W11

On-vehicle Inspection

1. Crank the engine and listen for initialization noise (clicks) of the EGR valve by using a screwdriver or a soundscope.

Note

- EGR valve initialization is closing action of the valve observed before and after the engine is started, and when the engine is stopped.

2. If the initialization noise is not heard, inspect for continuity of the wiring harness between the EGR valve and the PCM, and inspect the EGR valve.

Off-vehicle Inspection

1. Inspect resistance of the EGR valve coils.

Terminals	Resistance (Ω)
C—E C—A D—B D—F	Approx. 22

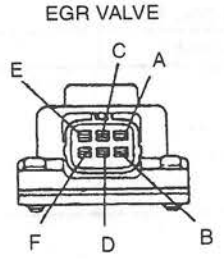

W6U116WAG

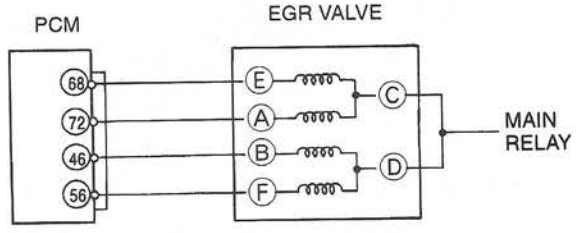

W6U116WAH

2. If not as specified, replace the EGR valve.

EGR BOOST SOLENOID VALVE INSPECTION

1. Remove the EGR boost solenoid valve.
2. Inspect airflow between each port under the following conditions.

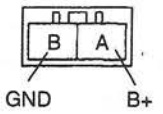

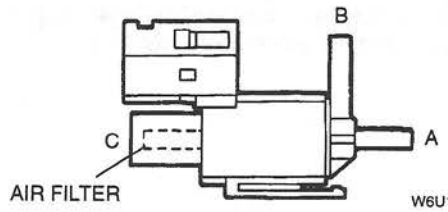

W6U116WAJ

W6U116W12

○—○ : Continuity ○═○ : Airflow

Step	Terminal		Port		
	A	B	A	B	C
1	○—○			○═○	
2	B+	GND	○═○		

W6U116WAK

3. If not as specified, replace the EGR boost solenoid valve.

PCV VALVE INSPECTION

1. Remove the PCV valve.
2. Blow through the valve and verify that air flows as specified.

Specification

Condition	Airflow
Air applied to port A	Yes
Air applied to port B	No

W6U116W13

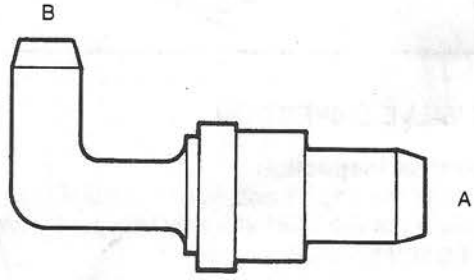

W6U116WAL

3. If not as specified, replace the PCV valve.

01–17 CHARGING SYSTEM

BATTERY REMOVAL/INSTALLATION . 01–17–1
BATTERY INSPECTION 01–17–1
Battery 01–17–1
Dark Current 01–17–2
BATTERY RECHARGING 01–17–2
GENERATOR REMOVAL/INSTALLATION 01–17–3
A/C Compressor Removal Note [KL] .. 01–17–3
GENERATOR INSPECTION 01–17–4
Generator Warning Light 01–17–4
Generator 01–17–4

BATTERY REMOVAL/INSTALLATION

W6U117W01

1. Remove in the order indicated in the table.
2. Install in the reverse order of removal.

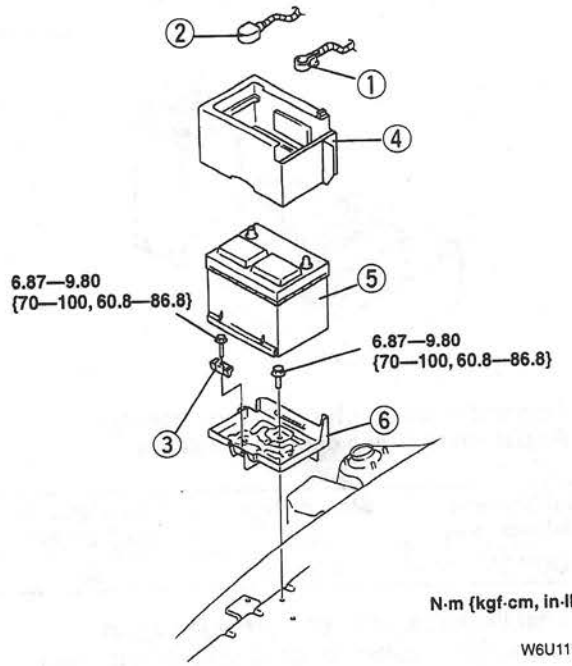

W6U117WA0

1	Negative battery cable
2	Positive battery cable
3	Battery clamp
4	Battery box
5	Battery
6	Battery tray

BATTERY INSPECTION

W6U117W02

Battery

- Inspect the battery in the following procedure.

Step	Inspection		Action
1	Measure open circuit voltage of battery.	Above 12.4 V	Go to step 3.
		Below 12.4 V	Go to next step.
2	Quick charge for 30 minutes and check voltage again.	Above 12.4 V	Go to next step.
		Below 12.4 V	Replace battery.
3	Apply test load (see test load chart) to battery using a battery load tester and record battery voltage after 15 seconds. Is voltage more than specification?	Yes	Go to next step.
		No	Replace battery.
4	Inspect the charge eye condition. Does condition indicate battery is okay.	Yes	Battery is okay.
		No	Replace battery.

Test load chart

Battery	Load (A)
GROUP 36R	240

Battery positive voltage with load

Approximate battery temp.	Minimum voltage (V)
21 °C {70 °F}	9.6
15 °C {60 °F}	9.5
10 °C {50 °F}	9.4
4 °C {40 °F}	9.3
–1 °C {30 °F}	9.1
–7 °C {20 °F}	8.9
–12 °C {10 °F}	8.7
–18 °C {0 °F}	8.5

Dark Current

1. Verify that the ignition switch is at OFF position and that the ignition key has been removed.
2. Disconnect the negative battery cable.

Caution

- **Operating electrical loads while measuring the dark current can damage the circuit tester.**

3. Measure the dark current between the negative battery terminal and the negative battery cable.

Dark current
20 mA max.

4. If the current exceeds the maximum, remove the fuse in the main fuse block and the fuse block one by one while measuring the dark current.
5. Inspect and repair harnesses and connectors of the fuse at which the current reduces.

BATTERY RECHARGING

Warning

- **Hydrogen gas is produced during normal battery operation. A battery-related explosion can cause serious injury. Keep all flames (including cigarettes), heat, and sparks away from the top and surrounding area of open battery cells.**

Caution

- **When disconnecting the battery, remove the negative cable first and install it last to prevent damage to electrical components or the battery.**
- **To prevent damage to electrical components or the battery, turn all accessories off and stop the engine before performing maintenance or recharging the battery.**
- **Do not quick charge for over 30 minutes. It will damage the battery.**

1. Place a battery in a pan of water to prevent it from overheating. The water level should come up about halfway on the battery. Keep water off the top of the battery.

W6U117W03

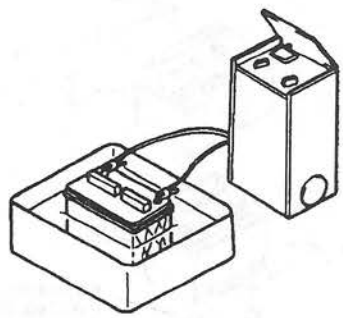

W6U117WA1

2. Connect a battery charger to the battery.
3. Adjust the charging current as follows.

Battery type (5-hour rate)	Slow charge (A)	Quick charge (A)/(30 min.)
GROUP 36R (48)	4.5—5.5	30

4. After the battery has been charged again, measure the battery positive voltage and verify that the battery keeps specified voltage for more than 1 hour.

Specification
Above 12.4 V

5. If not as specified, replace the battery.

GENERATOR REMOVAL/INSTALLATION

W6U117W04

Warning

- **When the battery cables are connected, touching the vehicle body with generator terminal B will generate sparks. This can cause personal injury, fire, and damage to the electrical components. Always disconnect the battery before performing the following operation.**

1. Disconnect the negative battery cable.
2. Remove the transverse member. (FS)
3. Remove the front pipe. (FS) (Refer to 01–15 EXHAUST SYSTEM REMOVAL/INSTALLATION [FS].)
4. Remove in the order indicated in the table.
5. Install in the reverse order of removal.
6. Verify the drive belt deflection/tension. (Refer to 01–10A DRIVE BELT INSPECTION [FS].) (Refer to 01–10B DRIVE BELT INSPECTION [KL].)

FS

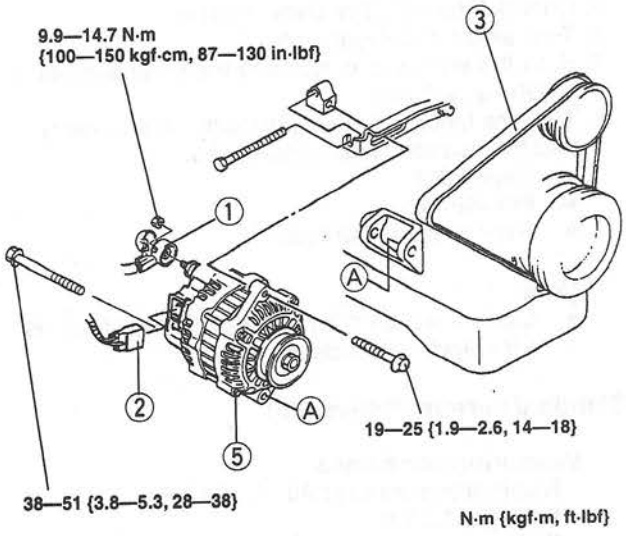

W6U117WA2

KL

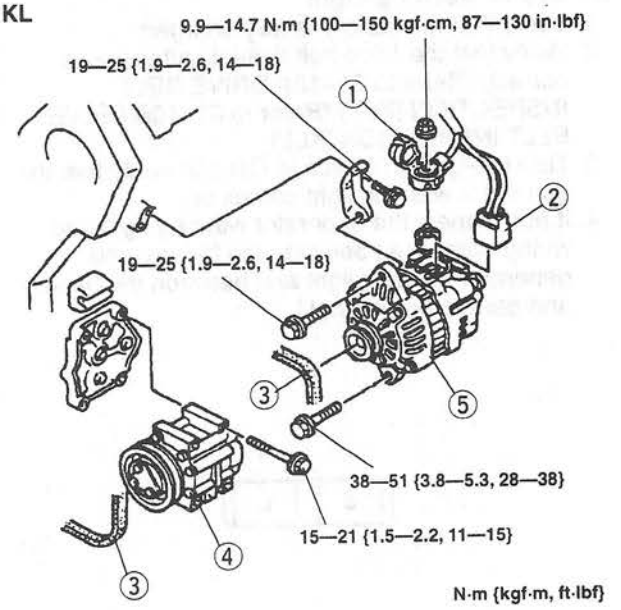

W6U117WA3

1	Terminal B wire
2	Connector
3	Drive belt
4	A/C compressor [KL] ☞ Removal Note
5	Generator

A/C Compressor Removal Note [KL]

- Remove the A/C compressor with the pipe still connected. Position the A/C compressor so that it is out of the way.

GENERATOR INSPECTION

Generator Warning Light

1. Verify that the battery is fully charged.
2. Verify that the drive belt deflection/tension is correct. (Refer to 01–10A DRIVE BELT INSPECTION [FS].) (Refer to 01–10B DRIVE BELT INSPECTION [KL].)
3. Turn the ignition switch to ON and verify that the generator warning light comes on.
4. If not, inspect the generator warning light and wiring harnesses between the battery and generator warning light and between the battery and generator terminal L.

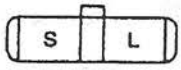

W6U117WA4

5. Turn the ignition switch to START and verify that the generator warning light goes out after engine starts.
6. If not, inspect the generator.

Generator Voltage

1. Verify that the battery is fully charged.
2. Verify that the drive belt deflection/tension is within the specification. (Refer to 01–10A DRIVE BELT INSPECTION [FS].) (Refer to 01–10B DRIVE BELT INSPECTION [KL].)
3. Turn off all electrical loads.
4. Turn the ignition switch to START and verify that the generator turns smoothly without any noise while the engine is running.
5. Measure the voltage at the terminals shown in the table.

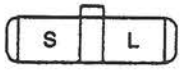

W6U117WA5

W6U117W05

Standard voltage

Terminal	Ignition switch ON (V)		Idle (V) [20 °C {68 °F}]	
	FS	KL	FS	KL
B	B+		14.1—14.7	
L	Approx. 1		13.2—13.8	
S	B+		14.1—14.7	

6. If not as specified, disassemble and inspect the generator.

Current

1. Verify that the battery is fully charged.
2. Verify that the drive belt deflection/tension is correct. (Refer to 01–10A DRIVE BELT INSPECTION [FS].) (Refer to 01–10B DRIVE BELT INSPECTION [KL].)
3. Disconnect the negative battery cable.
4. Connect a circuit tester, capable of reading 120 A or over, between generator terminal B and the wiring harness.
5. Connect the negative battery cable.
6. Turn all electrical loads off.
7. Start the engine and increase the engine speed to 2,000—2,500 rpm.
8. Turn the following electrical loads on and verify that the current reading increases.
   - Headlights
   - Blower motor
   - Rear window defroster

Note

- Current required for generating power varies with electrical loads applied.

Standard current (Reference)

Measuring conditions
Room temperature: 20 °C {68 °F}
Voltage: 13.5 V
Engine hot

Engine speed (rpm)	Terminal B current (A)	
	FS	KL
1,000	Approx. 58 or below (must not be 0)	Approx. 70 or below (must not be 0)
2,000	Approx. 77 or below (must not be 0)	Approx. 90 or below (must nut be 0)

9. If generator terminal B current will not increase, disassemble and inspect the generator.

01–18 IGNITION SYSTEM

IGNITION COIL
REMOVAL/INSTALLATION 01–18–1
IGNITION COIL INSPECTION 01–18–1
Primary Coil Winding **01–18–1**
Secondary Coil Winding **01–18–2**
Insulation Resistance of Case **01–18–2**
HIGH-TENSION LEAD
REMOVAL/INSTALLATION 01–18–3
SPARK PLUG INSPECTION [KL] 01–18–3

IGNITION COIL REMOVAL/INSTALLATION

1. Disconnect the negative battery cable.
2. Remove the fresh-air duct. (FS) (Refer to 01–13A INTAKE-AIR SYSTEM REMOVAL/INSTALLATION [FS].)
3. Remove in the order indicated in the table.
4. Install in the reverse order of removal.

FS

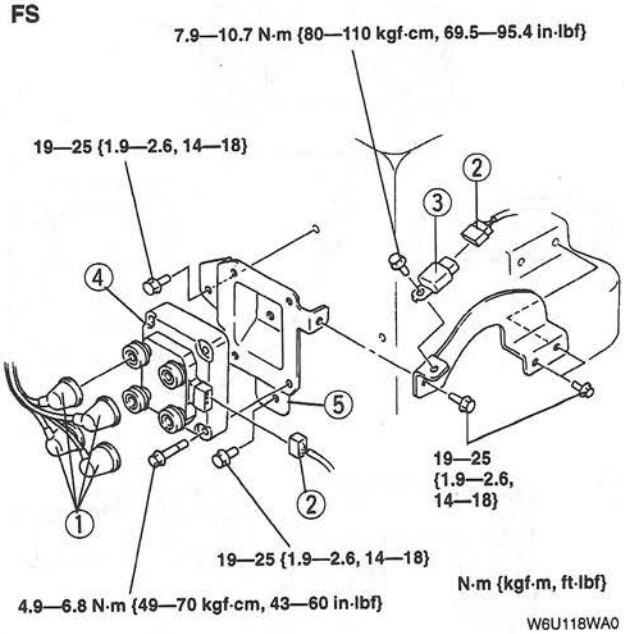

W6U118WA0

W6U118W01

KL

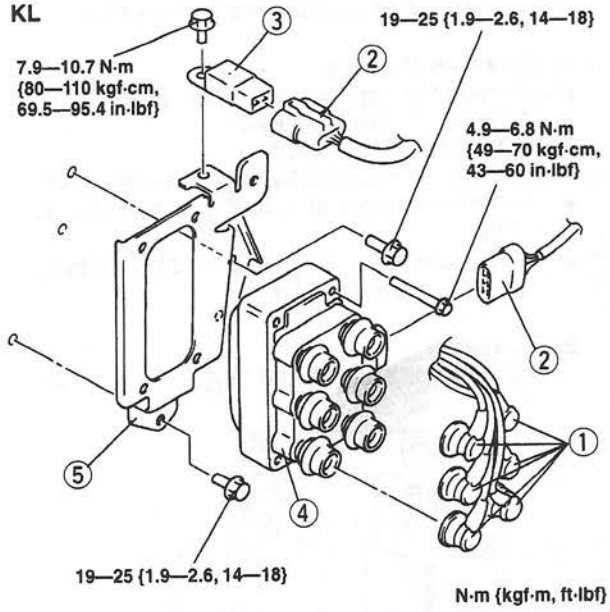

W6U118WA1

1	High-tension lead ☞ 01–18 HIGH-TENSION LEAD REMOVAL/INSTALLATION
2	Connector
3	Condenser
4	Ignition coil
5	Ignition coil bracket

IGNITION COIL INSPECTION

W6U118W02

Primary Coil Winding

1. Disconnect the ignition coil connector.
2. Measure the resistance by using an ohmmeter.
   - From terminal A to B, and terminal B to C. (FS)
   - From terminal A to D, and terminal B to D, and terminal C to D. (KL)

Specification
0.45—0.55 Ω [20 °C {68 °F}]

FS

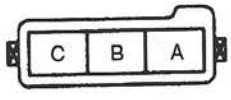

W6U118WA2

KL

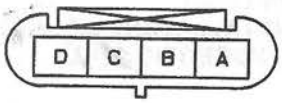

W6U118WA3

3. If not as specified, replace the ignition coil.

Secondary Coil Winding

1. Disconnect the high-tension leads. (Refer to 01–18 HIGH-TENSION LEAD REMOVAL/INSTALLATION.)
2. Measure the resistance by using an ohmmeter.
   - From lead hole 1 to 4, and lead hole 2 to 3. (FS)
   - From lead hole 1 to 4, and lead hole 2 to 5, and lead hole 3 to 6. (KL)

Specification
11.5—15.5 kΩ [20 °C {68 °F}]

FS

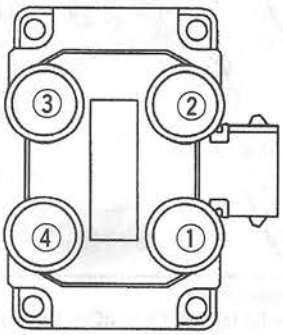

W6U118WA4

KL

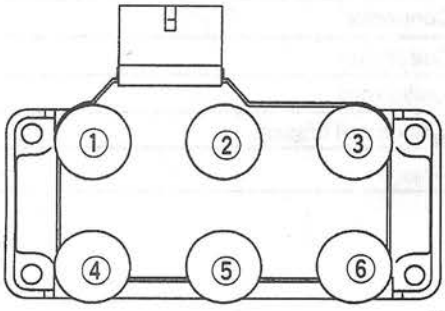

W6U118WA5

3. If not as specified, replace the ignition coil.

Insulation Resistance of Case

1. Disconnect the high-tension leads and ignition coil connector. (Refer to 01–18 HIGH-TENSION LEAD REMOVAL/INSTALLATION.)
2. Measure the insulation resistance between terminal B (FS) or D (KL), and ignition coil case by using a 500 V mega tester.

Specification
Above 10 MΩ

FS

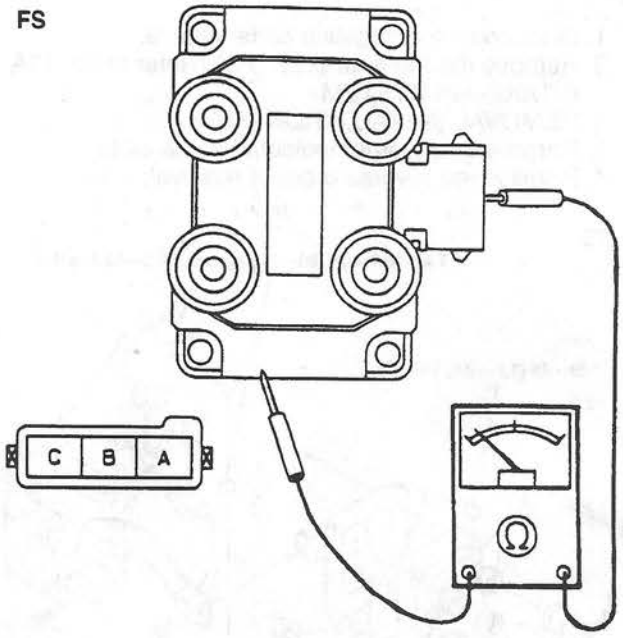

W6U118WA6

KL

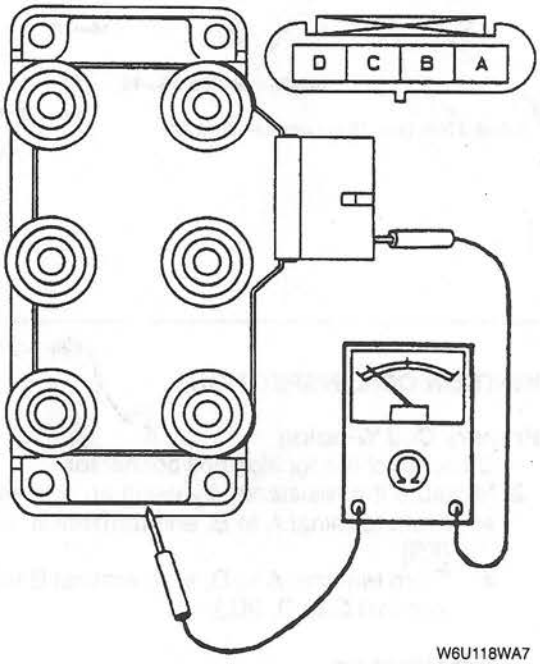

W6U118WA7

3. If not as specified, replace the ignition coil.

HIGH-TENSION LEAD REMOVAL/INSTALLATION

W6U118W03

Caution

- **The high-tension leads must be reinstalled to their original positions. Incorrect installation can damage the leads and cause power loss, and negatively effect the electronic components.**

SPARK PLUG INSPECTION [KL]

W6U118W04

Caution

- **To protect the platinum electrode:**
  1. **Do not use a wire brush to clean the electrode.**
  2. **Use a plug cleaner for a maximum of 20 seconds and air pressure below 589 kPa {6.00 kgf/cm^2, 85.0 psi}.**
  3. **Do not adjust the plug gap.**

01–19 STARTING SYSTEM

STARTER REMOVAL/INSTALLATION . 01–19–1
Starter Installation Note (FS) 01–19–2
STARTER INSPECTION 01–19–2
On-vehicle Inspection 01–19–2
No Load Test 01–19–2
STARTER INTERLOCK SWITCH INSPECTION (MTX) 01–19–2

STARTER REMOVAL/INSTALLATION

W6U119W01

Warning

- **When the battery cable are connected, touching the vehicle body with starter terminal B will generate sparks. This can cause personal injury, fire, and damage to the electrical components. Always disconnect the battery before performing the following operation.**

1. Remove the battery.
2. Remove the air cleaner component. (Refer to 01–13A INTAKE-AIR SYSTEM REMOVAL/INSTALLATION [FS].) (Refer to 01–13B INTAKE-AIR SYSTEM REMOVAL/INSTALLATION [KL].)
3. Remove the transverse member.
4. Remove the intake manifold bracket. (FS)
5. Remove the fuel filter with the fuel hose still connected. Position the fuel filter so that it is out of the way. (KL ATX)
6. Remove the oil pipe. (KL ATX) (Refer to 05–17B OIL COOLER REMOVAL/INSTALLATION [GF4A-EL], Oil Pipe Installation Note.)
7. Remove in the order indicated in the table.
8. Install in the reverse order of removal.

FS

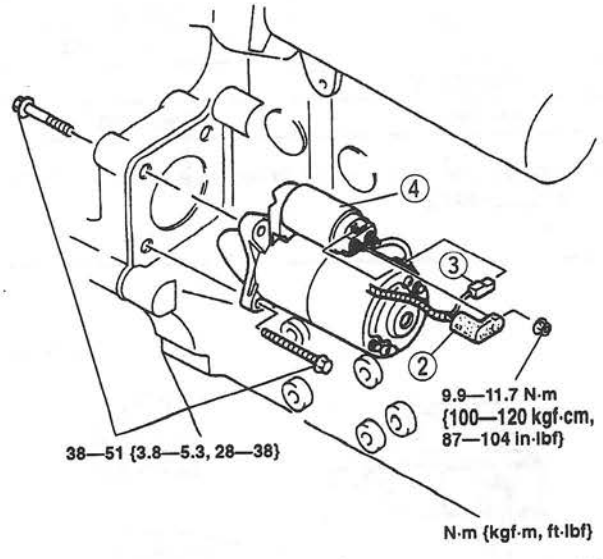

W6U119WA0

KL (MTX)

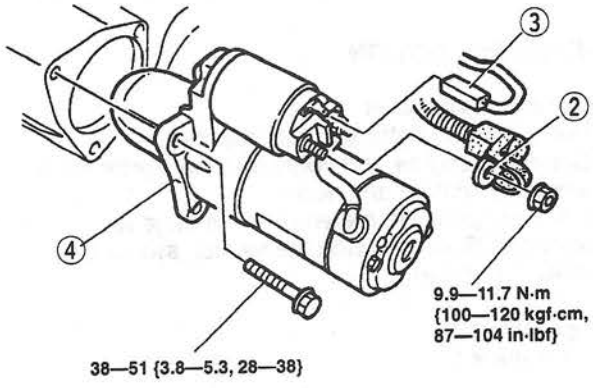

N·m {kgf·m, ft·lbf}

W6U119WA1

KL (ATX)

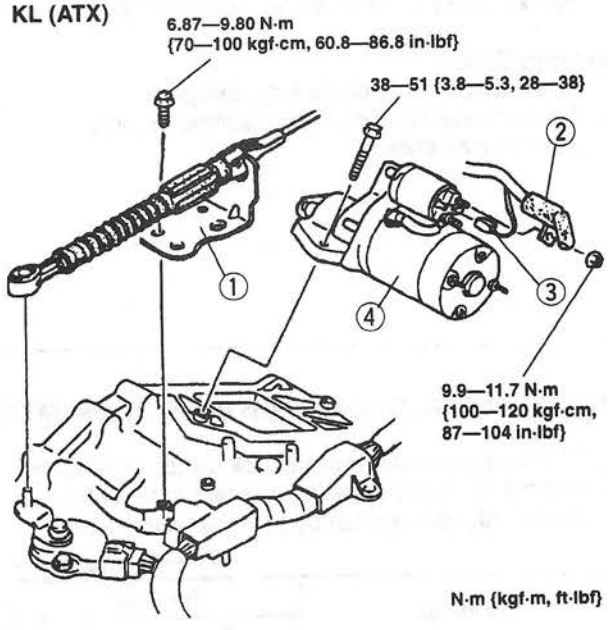

W6U119WA2

1	Selector cable (KL ATX)
2	Terminal B wire
3	Terminal S wire
4	Starter ☞ Installation Note (FS)

Starter Installation Note (FS)

- Tighten the starter fitting bolts in the order shown.

FS

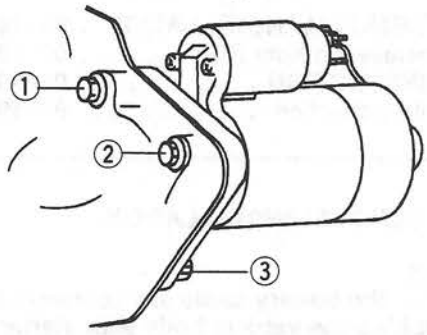

W6U119WA3

STARTER INSPECTION

On-vehicle Inspection

1. Verify that the battery is fully charged.
2. Crank the engine and verify that the starter turns smoothly without any noise.
3. If not as specified, measure the voltage at terminals S and B when the ignition switch is in START position.

Specification
Above 8 V

4. If the voltage is within the specification, remove the starter and inspect the magnetic switch and the starter.
5. If the voltage is not as specified, inspect the wiring harness, ignition switch, starter interlock switch (MTX), and transaxle range switch (ATX).

No Load Test

1. Verify that the battery is fully charged.
2. Connect the starter, battery, voltmeter, and ammeter as shown.

W6U119W02

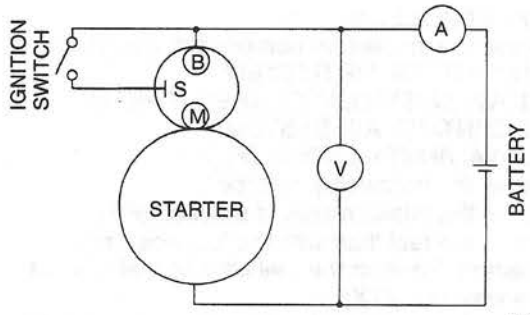

W6U119WA4

3. Operate the starter and verify that it turns smoothly.
4. Measure the voltage and current while the starter is operating.

Specification

Item	Engine	
	FS	KL
Voltage (V)	11	
Current (A)	Below 90	

5. If not as specified, repair or replace the inner parts as necessary.

STARTER INTERLOCK SWITCH INSPECTION (MTX)

1. Disconnect the starter interlock switch connector.
2. Inspect for continuity between terminals of the starter interlock switch by using an ohmmeter.

O—O : Continuity

Condition	Terminal	
	B	C
Clutch pedal not depressed		
Clutch pedal depressed	O	O

W6U119WA6

W6U119W03

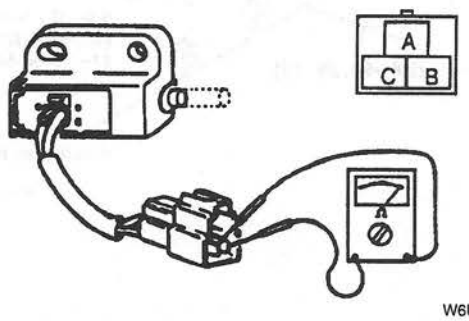

W6U119WA5

3. If not as specified, replace the starter interlock switch.

01–20 CRUISE CONTROL SYSTEM

CRUISE ACTUATOR
REMOVAL/INSTALLATION 01–20–1
Actuator Cable Removal Note 01–20–1
CRUISE ACTUATOR INSPECTION 01–20–2
Terminal Voltage List (Reference) 01–20–2
ACTUATOR CABLE ADJUSTMENT ... 01–20–3
ACTUATOR CABLE
REMOVAL/INSTALLATION 01–20–3
CRUISE CONTROL SWITCH
REMOVAL/INSTALLATION 01–20–4
CRUISE CONTROL SWITCH
INSPECTION 01–20–4

CRUISE ACTUATOR REMOVAL/INSTALLATION

W6U120W01

1. Disconnect the negative battery cable.
2. Remove in the order indicated in the table.
3. Install in the reverse order of removal.
4. Adjust the actuator cable. (Refer to 01–20 ACTUATOR CABLE ADJUSTMENT.)

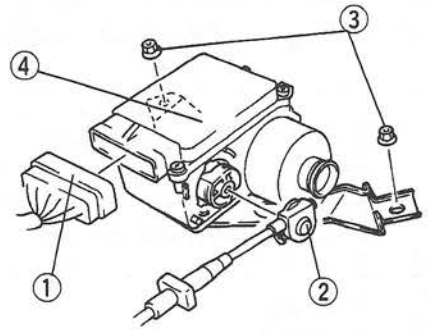

W6U120WA0

1	Connector
2	Actuator cable ☞ Removal Note
3	Nut
4	Cruise actuator

Actuator Cable Removal Note

1. Remove the actuator cable cap from the cruise actuator by pushing the tab and rotating the actuator cable cap counterclockwise.

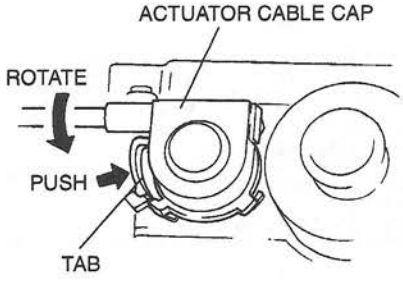

W6U120WA1

2. Pull the actuator cable cap forward.

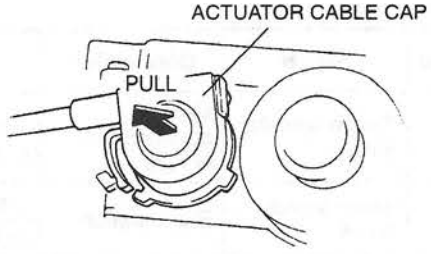

W6U120WA2

3. Remove the actuator cable from the cruise actuator.

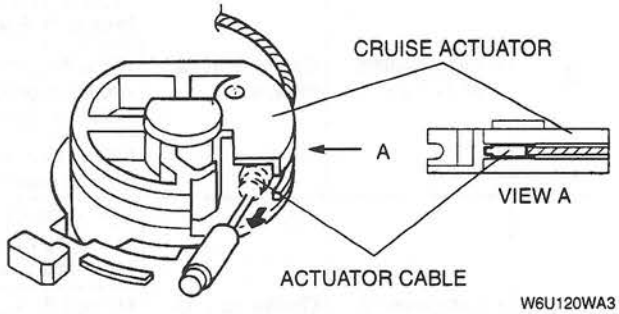

W6U120WA3

CRUISE ACTUATOR INSPECTION

W6U120W02

1. Measure the voltage at the cruise actuator connector terminals as indicated below.
2. Disconnect the cruise actuator connector before checking for continuity at terminal A, E, F, and I.
3. If not as specified, inspect the parts listed under "Inspection area" and the related wiring harnesses.
4. If the parts and wiring harnesses are okay but the system still does not work properly, replace the cruise actuator.

Terminal Voltage List (Reference)

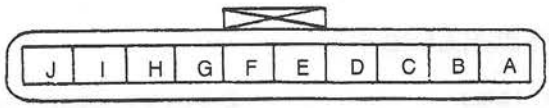

W6U120WA4

Terminal	Signal	Connection	Test condition		Voltage (V)/ Continuity	Inspection area
A	Cruise actuator ground	Vehicle speedometer sensor	Constant: check for continuity to ground		Yes	Vehicle speedometer sensor
B	Brake switch on/off	Brake switch	Depress brake pedal		0	• STOP 20 A fuse • Brake switch
			Release brake pedal		B+	
C	—	Not used	—		—	—
D	IG1	TURN 10 A fuse	Ignition switch at ON		B+	TURN 10 A fuse
			Ignition switch at LOCK or ACC		0	
E	Cruise control switch input	Cruise control switch	SET/COAST switch hold at on: measure the resistance between terminals E and F		Approx. 240 Ω	Cruise control switch
			RESUME/ACCEL switch hold at on: measure the resistance between terminals E and F		Approx. 910 Ω	
			Other: check for continuity between terminals E and F		No	
F	Cruise control switch output	Cruise control switch	SET/COAST switch hold at on: measure the resistance between terminals E and F		Approx. 240 Ω	Cruise control switch
			RESUME/ACCEL switch hold at on: measure the resistance between terminals E and F		Approx. 910 Ω	
			Other: check for continuity between terminals E and F		No	
G	Brake switch on/off	Brake switch	Depress brake pedal		B+	• STOP 20 A fuse • Brake switch
			Release brake pedal		0	
H	Vehicle speed	Vehicle speedometer sensor	Vehicle speed	20 km/h {12 MPH}	Approx. 4.5	Vehicle speedometer sensor
				50 km/h {31 MPH}	Approx. 8.5	
				90 km/h {56 MPH}	Approx. 16.5	
I	Selector lever position (ATX)	Transaxle range switch	Selector lever at N or P range: check for continuity to ground		Yes	Transaxle range switch
			Other: check for continuity to ground		No	
	Clutch switch on/off (MTX)	Clutch switch	Depress clutch pedal: check for continuity to ground		Yes	Clutch switch
			Release clutch pedal: check for continuity to ground		No	
J	Cruise set indicator light output	Cruise set indicator light	Ignition switch at ON		B+	• METER 10 A fuse • Instrument cluster
			Ignition switch at LOCK or ACC		0	

ACTUATOR CABLE ADJUSTMENT

W6U120W03

1. Remove the clip.
2. Pull the actuator cable until the throttle lever starts moving to eliminate the actuator cable play.

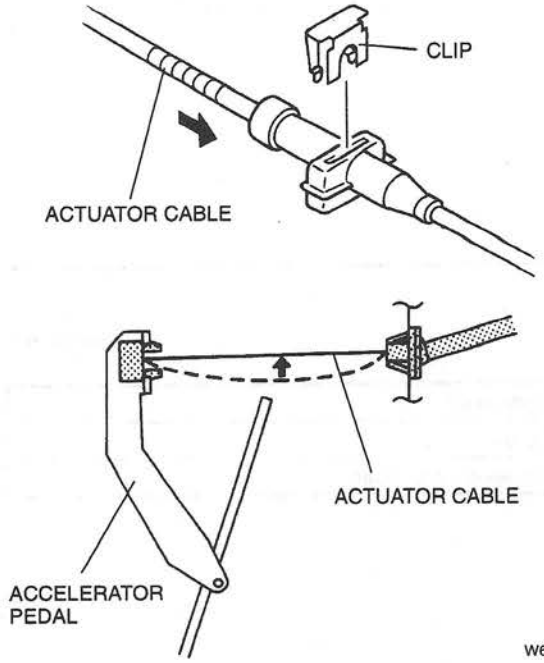

W6U120WA5

3. Then loosen the actuator cable until an **approximately 3 mm {0.12 in}** free play is obtained.

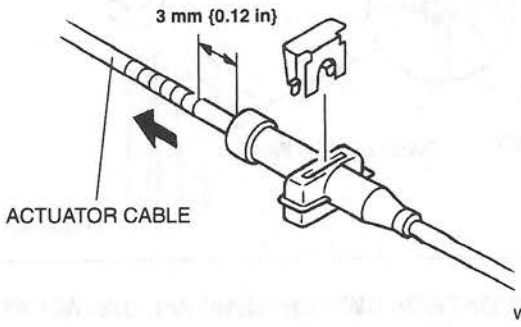

W6U120WA6

4. Install the clip.

ACTUATOR CABLE REMOVAL/INSTALLATION

W6U120W04

1. Remove the actuator cable cap from the cruise actuator by pushing the tab and rotating the actuator cable cap counterclockwise.

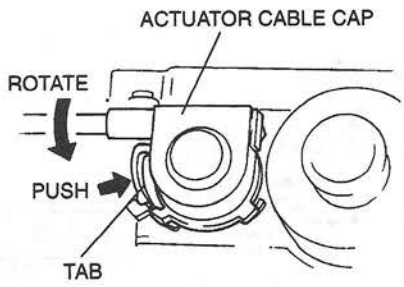

W6U120WA7

2. Pull the actuator cable cap forward.

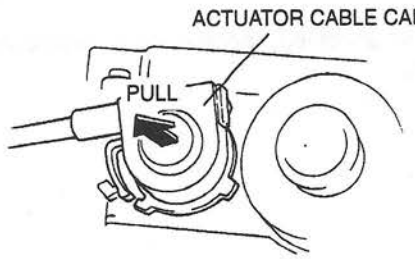

W6U120WA8

3. Remove the actuator cable from the cruise actuator.

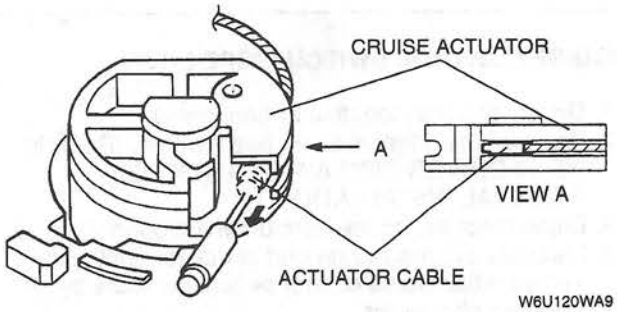

W6U120WA9

4. Press the hooks of the bush, and remove it from the accelerator pedal.

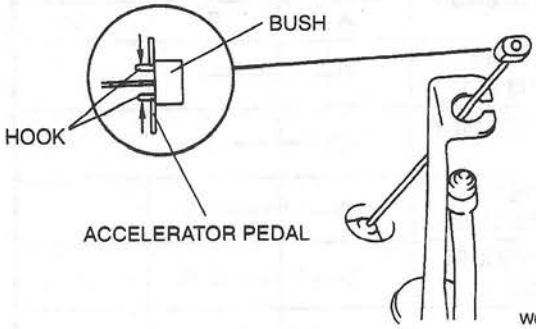

W6U120WAA

5. Press the hooks of the grommet, and remove it from the dash lower panel.

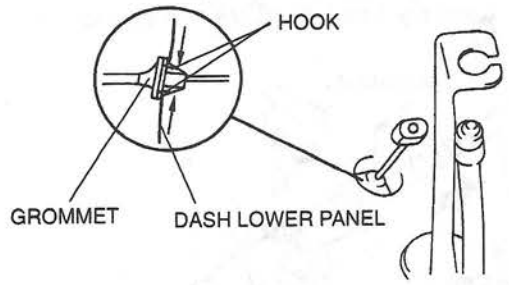

W6U120WAB

6. Push the actuator cable through the dash lower panel to remove it.
7. Install in the reverse order of removal.
8. Adjust the actuator cable. (Refer to 01–20 ACTUATOR CABLE ADJUSTMENT.)

CRUISE CONTROL SWITCH REMOVAL/INSTALLATION

W6U120W05

1. Disconnect the negative battery cable.
2. Remove the driver-side air bag module. (Refer to 08–10 DRIVER-SIDE AIR BAG MODULE REMOVAL/INSTALLATION.)
3. Remove in the order indicated in the table.
4. Install in the reverse order of removal.

1	Connector
2	Screw
3	Cruise control switch

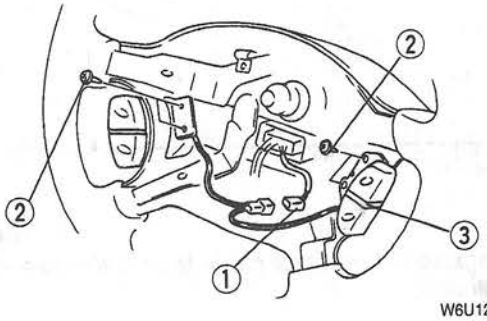

W6U120WAC

CRUISE CONTROL SWITCH INSPECTION

W6U120W06

1. Disconnect the negative battery cable.
2. Remove the driver-side air bag module. (Refer to 08–10 DRIVER-SIDE AIR BAG MODULE REMOVAL/INSTALLATION.)
3. Disconnect the cruise control switch connector.
4. Measure the resistance and check for continuity between the cruise control switch terminals by using an ohmmeter.

○—○ : Continuity ○-WW-○ : Resistance

Switch position	Terminal		
	A	B	C
CRUISE MAIN switch hold at on	○		○
OFF switch hold at on	○	○	
SET/COAST switch hold at on	○	R_1	
RESUME/ACCEL switch hold at on	○	R_2	
Other			

R_1 : approx. 240 Ω R_2: approx. 910 Ω

W6U120WAD

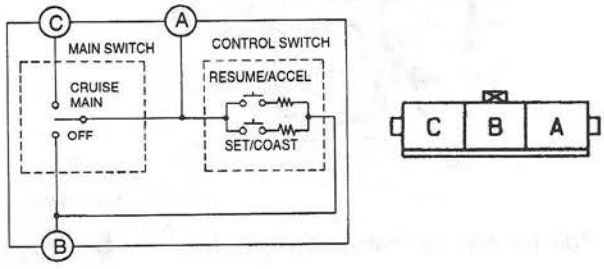

W6U120WAE

5. If not as specified, replace the cruise control switch.

01–40A CONTROL SYSTEM [FS]

CONTROL SYSTEM COMPONENT LOCATION [FS] 01–40A–2
POWERTRAIN CONTROL MODULE (PCM) REMOVAL/INSTALLATION [FS] 01–40A–3
PCM Removal Note **01–40A–3**
POWERTRAIN CONTROL MODULE (PCM) INSPECTION [FS] 01–40A–3
Using the SST (104 Pin Breakout Box) **01–40A–3**
Using the SST (NGS Tester) **01–40A–9**
MASS AIR FLOW SENSOR INSPECTION [FS] 01–40A–15
Using the SST (104 Pin Breakout Box) **01–40A–15**
Using the SST (NGS Tester) **01–40A–15**
CAMSHAFT POSITION SENSOR INSPECTION [FS] 01–40A–16
KNOCK SENSOR INSPECTION [FS] .. 01–40A–16
KNOCK SENSOR REPLACEMENT [FS] 01–40A–16
CRANKSHAFT POSITION SENSOR INSPECTION [FS] 01–40A–17
Inspection of Resistance **01–40A–17**
Inspection of Air Gap **01–40A–17**
CRANKSHAFT POSITION SENSOR REPLACEMENT [FS] 01–40A–17
THROTTLE POSITION SENSOR INSPECTION [FS] 01–40A–17
Inspection of Resistance **01–40A–17**
Inspection of Output Voltage **01–40A–17**
THROTTLE POSITION SENSOR ADJUSTMENT [FS] 01–40A–18
ENGINE COOLANT TEMPERATURE SENSOR INSPECTION [FS] 01–40A–20
Inspection of Output Voltage **01–40A–20**
Inspection of Resistance **01–40A–20**
INTAKE AIR TEMPERATURE SENSOR INSPECTION [FS] 01–40A–21
Inspection of Output Voltage **01–40A–21**
Inspection of Resistance **01–40A–21**
HEATED OXYGEN SENSOR INSPECTION [FS] 01–40A–22
Heated Oxygen Sensor Inspection ... **01–40A–22**
Heated Oxygen Sensor Heater Inspection **01–40A–23**
EGR BOOST SENSOR INSPECTION [FS] 01–40A–23
FUEL TANK PRESSURE SENSOR INSPECTION [FS] 01–40A–24
Using the SST (104 Pin Breakout Box) **01–40A–24**
Using the SSTs (NGS Tester) **01–40A–25**
POWER STEERING PRESSURE SWITCH INSPECTION [FS] 01–40A–26
Inspection of Output Voltage **01–40A–26**
Inspection of Continuity **01–40A–26**
NEUTRAL SWITCH INSPECTION [FS] . 01–40A–27
Inspection of Output Voltage **01–40A–27**
Inspection of Continuity **01–40A–28**
NEUTRAL SWITCH REMOVAL/INSTALLATION [FS] 01–40A–28
CLUTCH SWITCH INSPECTION [FS] .. 01–40A–28
Inspection of Output Voltage **01–40A–28**
Inspection of Continuity **01–40A–29**
CLUTCH SWITCH REMOVAL/INSTALLATION [FS] 01–40A–29
MAIN RELAY INSPECTION [FS] 01–40A–30
Inspection of Output Voltage **01–40A–30**
Inspection of Continuity **01–40A–30**

CONTROL SYSTEM COMPONENT LOCATION [FS]

W6U140W01

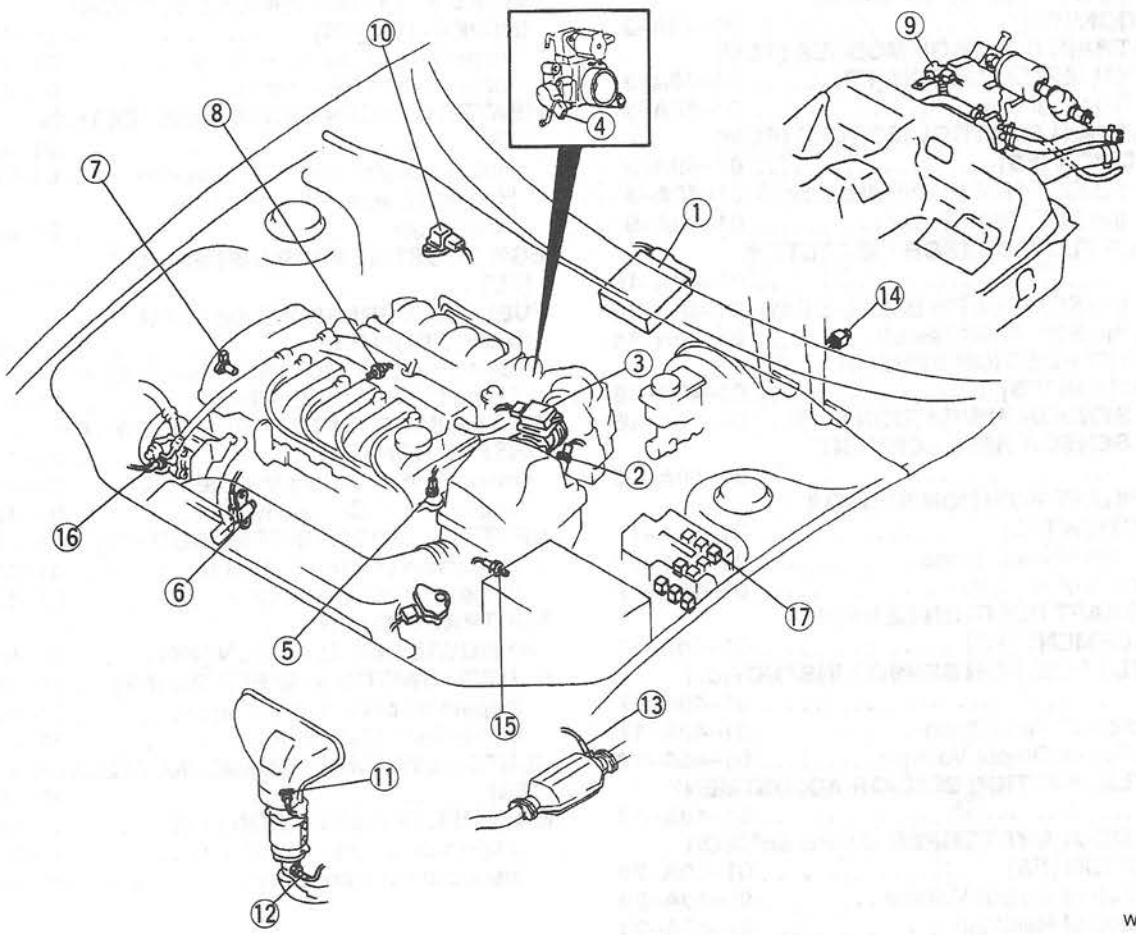

W6U140WA0

1	PCM
2	Intake air temperature sensor
3	Mass air flow sensor
4	Throttle position sensor
5	Engine coolant temperature sensor
6	Crankshaft position sensor
7	Camshaft position sensor
8	Knock sensor
9	Fuel tank pressure sensor

10	EGR boost sensor
11	Heated oxygen sensor (Front: California)
12	Heated oxygen sensor (Rear: California), (Front: Except California)
13	Heated oxygen sensor (Rear: Except California)
14	Clutch switch
15	Neutral switch
16	Power steering pressure switch
17	Main relay

POWERTRAIN CONTROL MODULE (PCM) REMOVAL/INSTALLATION [FS]

W6U140W02

Caution

- **PCM is sensitive to static electrical charges. If exposed to these charges, damage may result. If service of PCM is required, use the following safeguards to avoid damage to components.**
  1. **Leave the PCM in their original packaging until ready to install in vehicles.**
  2. **Avoid touching PCM connector pins.**
  3. **Avoid laying modules on nonconductive surfaces.**

1. Disconnect the negative battery cable.
2. Remove the rear console. (Refer to 09–17 REAR CONSOLE REMOVAL/INSTALLATION.)
3. Remove in the order indicated in the table.
4. Install in the reverse order of removal.

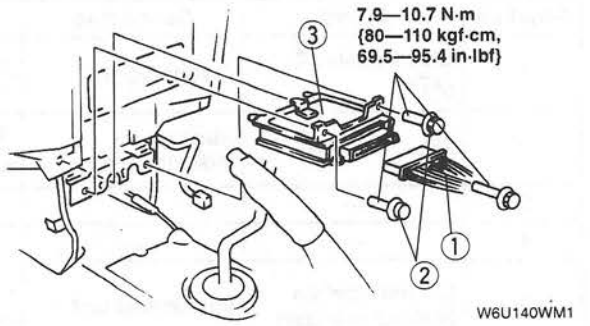

W6U140WM1

1	PCM connector
2	Bolt
3	PCM ☞ Removal Note

PCM Removal Note

- The PCM stores information on vehicle operating conditions including information to compensate for component tolerance. When an emission related component is replaced, Keep Alive Memory (KAM) should be cleared by disconnecting the battery terminal to erase the information stored in the PCM on the original component.

POWERTRAIN CONTROL MODULE (PCM) INSPECTION [FS]

W6U140W03

Caution

- **The PCM terminal voltages vary with change in measuring conditions and vehicle conditions. Always carry out a total inspection of the input systems, output systems, and PCM to determine the cause of trouble. Otherwise, a wrong diagnosis will be made.**

Using the SST (104 Pin Breakout Box)

1. Disconnect the negative battery cable.
2. Disconnect the PCM connector.
3. Connect the **SST** (104 Pin Breakout Box) to the PCM as shown.

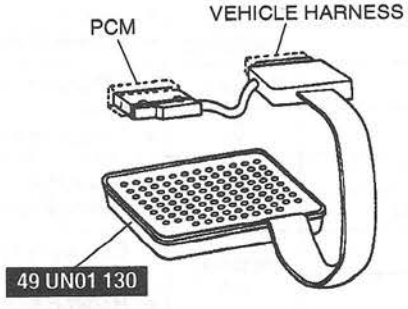

W6U140WA2

4. Tighten the connector bolt.

   Tightening torque
   7.9—10.7 N·m
   {80—110 kgf·m, 69.5—95.4 in·lbf}

5. Connect the negative battery cable.
6. Measure the voltage at each terminal.
7. If any incorrect voltage is detected, check related systems, wiring harnesses and connectors referring to the possible malfunction in the terminal voltage list.

Terminal voltage (Reference)

Terminal	Signal	Connect to	Test condition		Voltage (V)	Possible malfunction
1	Shift solenoid 2 (ATX)	Solenoid body	ON		Below 1.0	• Solenoid body • Related harness
			OFF		B+	
2	MIL	Malfunction indicator lamp	Malfunction indicator lamp OFF		B+	• MIL • Related harness
			Malfunction indicator lamp ON		Below 1.0	
3	—	—	—		—	—
4	—	—	—		—	—
5	Communication (with immobilizer)	Immobilizer unit	Check for signal by using an oscilloscope		—	• PCM*1 • Immobilizer unit • Related harness
6	—	—	—		—	—
7	—	—	—		—	—
8	—	—	—		—	—
9	—	—	—		—	—
10	Blower	Fan switch	Ignition switch ON	Fan switch OFF or at 1st or 2nd	9.7	• Fan switch • Related harness
				Fan switch at 3rd or higher	Below 1.0	
11	—	—	—		—	—
12*2	Ground	Ground	Constant		Below 1.0	• Related harness
13	EP ROM flashing	Data link connector terminal FEPS	Ignition switch ON		Approx. 0.6	• PCM • Related harness
			Idle			
14	DRL (for CANADA)	DRL unit	Daytime running light ON		Below 1.0	• DRL unit • Related harness
			Daytime running light OFF		Above 11.0	
15	Diagnostic trouble code output	Data link connector terminal BUS–	Carry out inspection according to diagnostic trouble code Diagnostic trouble code output is a part of serial communication Judgment by terminal voltage is not possible		—	• On-board diagnostic system
16	Diagnostic trouble code input	Data link connector terminal BUS+	Carry out inspection according to diagnostic trouble code Diagnostic trouble code output is a part of serial communication Judgment by terminal voltage is not possible		—	• On-board diagnostic system
17	Condenser fan control	Condenser fan relay	Condenser fan operating		Below 1.0	• Condenser fan relay • Related harness
			Condenser fan stops		B+	
18	CDCV control	CDCV	Ignition switch ON		B+	• CDCV • Related harness
			Diagnosis executed		Below 1.0	
19	Pressure regulator control	PRC solenoid valve	Idle (Hot condition)		Below 1.0	• PRC solenoid valve • Related harness
			Other		B+	
20	Idle air control (Positive)	IAC valve	Ignition switch ON		B+	• IAC valve • Related harness
			Idle	No load		
21	NE+	Crankshaft position sensor	Ignition switch ON		Approx. 1.5	• Crankshaft position sensor • Related harness
			Idle			
22	NE–	Crankshaft position sensor	Ignition switch ON		Approx. 1.5	• Crankshaft position sensor • Related harness
			Idle			
23	Ground	Ground	Constant		Below 1.0	• PCM 23 terminal harness (Open)

Terminal	Signal	Connect to	Test condition		Voltage (V)	Possible malfunction
24	Ground	Ground	Constant		Below 1.0	• PCM 24 terminal harness (Open)
25	—	—	—		—	—
26	IGT1	Ignition coil	Ignition switch ON		B+	• Ignition coil • Related harness
			Idle			
27	Shift solenoid 1 (ATX)	Solenoid body	ON		Below 1.0	• Solenoid body • Related harness
			OFF		B+	
28	—	—	—		—	—
29	O/D OFF switch (ATX)	O/D OFF switch	Ignition switch ON	O/D OFF switch release	B+	• O/D OFF switch • Related harness
				O/D OFF switch push	Below 1.0	
30	—	—	—		—	—
31	Power steering pressure	Power steering pressure switch	Ignition switch ON		B+	• Power steering pressure switch • Power steering system • Related harness
			Idle	Steering wheel in straight ahead position		
				Steering wheel is turned fully right or left	Below 1.0	
32	—	—	—		—	—
33	Ground	Vehicle speedometer sensor –	Constant		Below 1.0	• Vehicle speedometer sensor • Related harness
34	Barometric pressure/EGR boost	EGR boost sensor	Ignition switch ON		Approx. 4.0	• EGR boost sensor • Related harness
			Idle			
35	Heated oxygen sensor (Rear)	Heated oxygen sensor (Rear)	Ignition switch ON		Below 1.0	• Heated oxygen sensor (Rear) • Related harness
			Idle	Engine cold	Approx. 0	
				After warm up	0.1—0.9	
36	Ground	Mass air flow sensor	Constant		Below 1.0	• Mass air flow sensor • Related harness
37	Transaxle fluid temperature (ATX)	Transaxle fluid temperature sensor	After warm up		Approx. 1.95	• Transaxle fluid temperature sensor • Related harness
38	Engine coolant temperature	Engine coolant temperature sensor	Ignition switch ON	Engine coolant temperature 20 °C {68 °F}	Approx. 3.1	• Engine coolant temperature sensor • Related harness
				After warm up	Below 1.0	
39	Intake air temperature	Intake air temperature sensor	Ignition switch ON	Intake air temperature 20 °C {68 °F}	Approx. 3.1	• Intake air temperature sensor • Related harness
40	—	—	—		—	—
41	A/C	Heater control unit	Idle	A/C switch and fan switch ON	Below 1.0	• A/C switch • Refrigerant pressure switch • A/C amplifier • Related harness
				A/C switch OFF	B+	
42	—	—	—		—	—
43	—	—	—		—	—
44	—	—	—		—	—
45	Cooling fan control	Cooling fan relay	Cooling fan operating		Below 1.0	• Cooling fan relay • Related harness
			Cooling fan stops		B+	

Terminal	Signal	Connect to	Test condition		Voltage (V)	Possible malfunction
46	EGR valve #3 coil control	EGR valve	Ignition switch ON		B+	• EGR valve • Related harness
			Idle			
47	—	—	—		—	—
48	Engine speed	Instrument cluster	Ignition switch ON		B+	• Instrument cluster • Related harness
			Idle		Approx. 6.5	
49	Headlight	Headlight switch	Headlight switch ON		B+	• Headlight switch • Related harness
			Headlight switch OFF		Below 1.0	
50	—	—	—		—	—
51	Ground	Ground	Constant		Below 1.0	• PCM 51 terminal harness (Open)
52	IGT2	Ignition coil	Ignition switch ON		B+	• Ignition coil • Related harness
			Idle			
53	—	—	—		—	—
54	Torque converter clutch control (ATX)	Solenoid body	Torque converter clutch operation		Below 1.0	• Solenoid body • Related harness
			Torque converter clutch non-operation		B+	
55	Back-up power supply	Battery	Constant		B+	• PCM 55 terminal—Battery harness connector
56	EGR valve #4 coil control	EGR valve	Ignition switch ON		B+	• EGR valve • Related harness
			Idle		Below 1.0	
57	Knocking	Knock sensor	Ignition switch ON		Approx. 3.5	• Knock sensor • Related harness
			Idle			
58	Vehicle speed	Vehicle speed sensor +	Idle (AC range)		Approx. 0.1	• Vehicle speed sensor • Related harness
			48 km/h {30 mph} (AC range)		Approx. 8.0	
			88 km/h {55 mph} (AC range)		Approx. 12.7	
59	—	—	—		—	—
60	Heated oxygen sensor (Front)	Heated oxygen sensor (Front)	Ignition switch ON		Below 1.0	• Heated oxygen sensor (Front) • Related harness
			Idle	Engine cold	Below 5.0	
				After warm up	0.1—0.9	
			Acceleration	After warm up	0.5—1.0	
			Deceleration	After warm up	0—0.5	
61	—	—	—		—	—
62	Fuel tank pressure	Fuel tank pressure sensor	Ignition switch ON	Fuel tank pressure 0 kPa {0 mmHg, 0 inHg} (Barometric pressure)	Approx. 2.5	• Fuel tank pressure sensor • Related harness
63	Fuel tank level	Fuel gauge sender unit	Full fuel		Approx. 6	• Fuel level sender unit • Related harness
			Low fuel		Approx. 0	

Terminal	Signal	Connect to	Test condition		Voltage (V)	Possible malfunction
64	Load/no load distinction	**MTX** Neutral/Clutch switch	Other than neutral position and clutch pedal depressed		B+	• Neutral/Clutch switch • Related harness
			Neutral position and clutch pedal released		Below 1.0	
		ATX Transaxle range switch	P position		4.5	• Transaxle range switch • Related harness
			R position		3.6	
			N position		2.9	
			D range		2.1	
			2 range		1.4	
			1 range		0.7	
65	—	—	—		—	—
66	Rear window defroster	Rear window defroster switch	Ignition switch ON	Rear window defroster switch OFF	B+	• Rear window defroster switch • Related harness
				Rear window defroster switch ON	Below 1.0	
67	Purge control	Purge solenoid valve	Ignition switch ON		B+	• Purge solenoid valve • Related harness
			Idle			
68	EGR valve #1 coil control	EGR valve	Ignition switch ON		B+	• EGR valve • Related harness
			Idle			
69	A/C control	A/C relay	Ignition switch ON		B+	• A/C relay • Related harness
			Idle	A/C operating	Below 1.0	
				A/C stops	B+	
70	Fuel pump control (with immobilizer)	Fuel pump relay	Ignition switch ON		B+	• Fuel pump relay • Related harness
			Cranking		Below 1.0	
			Idle			
71	Power supply	Main relay	Ignition switch	ON	B+	• Main relay • Related harness
				OFF	Below 1.0	
72	EGR valve #2 coil control	EGR valve	Ignition switch ON		B+	• EGR valve • Related harness
			Idle		Below 1.0	
73	—	—	—		—	—
74	Fuel injector control	Fuel injector No.3	Ignition switch ON		B+	• Fuel injector • Related harness
75		Fuel injector No.1		Idle		
76	Ground	Ground	Constant		Below 1.0	• PCM 76 terminal harness (Open)
77	Ground	Ground	Constant		Below 1.0	• PCM 77 terminal harness (Open)
78	—	—	—		—	—
79	O/D OFF indicator light (ATX)	O/D OFF indicator light	Ignition switch ON	SW OFF	B+	• O/D OFF switch • Related harness
				SW ON (O/D OFF)	Below 1.0	
80	Fuel pump control (without immobilizer)	Fuel pump relay	Ignition switch ON		B+	• Fuel pump relay • Related harness
			Cranking		Below 1.0	
			Idle			
81	Electronic pressure control (ATX)	Solenoid body	Idle		9.4	• Solenoid body • Related harness
			48 km/h {30 mph}		9.7	
			88 km/h {55 mph}		11.1	
82	—	—	—		—	—

Terminal	Signal	Connect to	Test condition		Voltage (V)	Possible malfunction
83	Idle air control (Negative)	IAC valve	Ignition switch ON		B+	• IAC valve • Related harness
			Idle	No load	Approx. 9.4	
84	Turbine shaft speed (ATX)	Turbine shaft speed sensor	Idle (AC range)	2 or 1 range	0	• TSS sensor • Related harness
				D or R range		
				P or N range	0.4—0.7	
			Driving (AC range)	48 km/h {30 mph}	0.8	
				88 km/h {55 mph}	1.0	
85	SGC+	Camshaft position sensor	Ignition switch ON		Approx. 0.03	• Camshaft position sensor • Related harness
			Idle		Approx. 0.07	
86	—	—	—		—	—
87	SGC–	Camshaft position sensor	Ignition switch ON		Below 1.0	• Camshaft position sensor • Related harness
			Idle			
88	Mass air flow	Mass air flow sensor	Ignition switch ON		Approx. 0.02	• Mass air flow sensor • Related harness
			Idle		0.6—1.1	
89	Throttle position	Throttle position sensor	Ignition switch ON	Closed throttle position	0.3—0.7	• Throttle position sensor • Related harness
				Wide open throttle	3.4—5.3	
90	Constant voltage (Vref)	Throttle position sensor EGR boost sensor Fuel tank pressure sensor	Ignition switch ON		Approx. 5.0	• PCM 90 terminal voltage • Related harness
91	Ground	Engine coolant temperature sensor Intake air temperature sensor EGR boost sensor Fuel tank pressure sensor Throttle position sensor Neutral/clutch switch Heated oxygen sensor (Front, Rear) Turbine speed sensor	Constant		Below 1.0	• PCM 91 terminal harness (Open)
92	Brake	Brake switch	Brake pedal released		Below 1.0	• Brake switch • Related harness
			Brake pedal depressed		B+	
93	Heated oxygen heater (Front) control	Heated oxygen sensor (Front)	Ignition switch ON		B+	• Heated oxygen sensor (Front) • Related harness
			Idle		Below 1.0	
94	—	—	—		—	—
95	Heated oxygen sensor (Rear) heater control	Heated oxygen sensor (Rear)	Ignition switch ON		B+	• Heated oxygen sensor (Rear) • Related harness
			Idle		Below 1.0	
96	—	—	—		—	—
97	Power supply	Main relay	Ignition switch	OFF	Below 1.0	• Main relay • Related harness
				ON	B+	

Terminal	Signal	Connect to	Test condition		Voltage (V)	Possible malfunction
98	EGR boost sensor switching control	EGR boost sensor solenoid valve	Ignition switch ON		B+	• EGR boost sensor solenoid valve • Related harness
			Idle			
99	—	—	—		—	—
100	Fuel injector control	Fuel injector No.4	Ignition switch ON	Idle	B+	• Fuel injector • Related harness
101		Fuel injector No.2				
102	3–2 timing/casting clutch solenoid (ATX)	Solenoid body	Idle	P/R/N/D range	Approx. 9.3	• Solenoid body • Related harness
				2/1 range	B+	
103	Ground	Ground	Constant		Below 1.0	• PCM 103 terminal harness (Open)
104	—	—	—		—	—

*1 : If the immobilizer unit functions normally, replace the PCM.

*2 : For California

Using the SST (NGS Tester)

1. In the passenger compartment, connect the **SSTs** (NGS tester) to the data link connector.

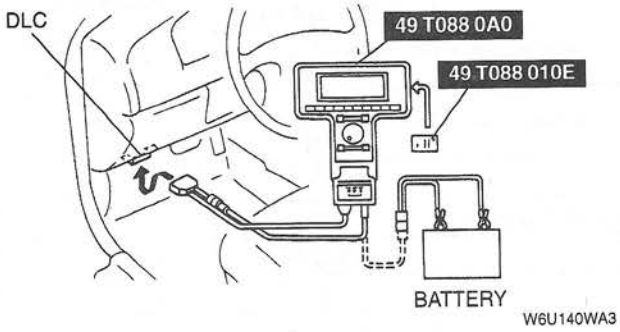

2. Referring to the NGS tester instruction manual, select the "PID/DATA MONITOR AND RECORD" and press TRIGGER.

Note

- The "PID/DATA MONITOR AND RECORD" function is to monitor the calculation value of input/output signals in the PCM. Deviation in the value does not always indicate malfunction in the related input/output devices.
- For inspection of the input/output signals other than in the link monitor table, check voltage at the applicable PCM terminal by using the **SST** (104 Pin Breakout Box).

3. Press CLEAR to clear previously selected items. (A list of item descriptions appears on the screen).
4. Select items necessary and press START.
5. Carry out inspection referring to PID/DATA MONITOR table.
6. If normal output signal cannot be detected when all input signals are normal, replace the PCM. (Refer to 01–40A POWERTRAIN CONTROL MODULE (PCM) REMOVAL/INSTALLATION [FS].)

PID/DATA MONITOR item table

Note
- The following PIDs may display on the NGS tester, but there are not used for inspection, because of these device are not applied for this model.

• ACP	• EGRVP	• HTR22F	• SHORTFT2
• AIR	• EVAPCP	• HTRX1	• SS3
• AIRF	• EVAPCVF	• HTRX2	• SS3F
• AIRM	• FANM	• IMRC	• TAR_LRN
• ARC	• FFFM	• IMRCF	• TATCF
• ARCF	• FP M	• IMTVF	• TCCMACT
• CCSF	• FTP B	• INJ5F	• TCCRAT
• DTCCNTD	• HTR11A	• INJ6F	• TR V
• EGRC	• HTR12A	• INJ7F	• TRAC
• EGRCF	• HTR21	• INJ8F	• TRANRAT
• EGRFO	• HTR21A	• LFPF	• TRD
• EGRFS	• HTR21F	• LONGFT2	• TSS
• EGRV	• HTR22	• OCTADJ	• WACF
• EGRVF	• HTR22A	• PTO	• 4×4L

Monitor item	Full name	Unit/Condition	Application	
			MTX	ATX
ACCS	A/C switch	ON/OFF	×	×
BARO	Barometric pressure	Hz	×	×
BLWMTR	Fan switch	ON/OFF	×	×
BOO	Brake switch	ON/OFF		×
CCS	Pressure required for 3–2 timing coast clutch solenoid valve	PSI		×
CPP/PNP	Clutch switch/Neutral switch	ON/OFF	×	
DRIVECT	Number of OBD II drive cycles completed	#	×	×
DRLMP	Daytime running lights	ON/OFF	×	×
DTC CNT	Total number of codes and pending codes stored	#	×	×
ECT	Engine coolant temperature	°F	×	×
ECT V	Engine coolant temperature sensor voltage	V	×	×
EGR	EGR (Pressure)	PSI	×	×
EGRBARO	EGR boost solenoid valve	ON/OFF	×	×
EGRCD1	EGR valve (Coil #1)	ON/OFF	×	×
EGRCD2	EGR valve (Coil #2)	ON/OFF	×	×
EGRCD3	EGR valve (Coil #3)	ON/OFF	×	×
EGRCD4	EGR valve (Coil #4)	ON/OFF	×	×
EPC	Line pressure	%		×
EPC V	Electric pressure control signal voltage	V		×
EVAPCPF	Purge solenoid vale (Failed detected)	YES/NO	×	×
EVAPCV	Canister drain cut valve (Duty cycle)	%	×	×
EVAPPDC	Purge solenoid valve (Duty cycle)	%	×	×
FLI	Fuel level	%	×	×
FLI V	Fuel gauge sender unit signal voltage	V	×	×
FP	Fuel pump relay	%	×	×
FPF	Fuel pump relay (Failed detected)	YES/NO	×	×
FPRC	PRC solenoid valve	ON/OFF	×	×
FTP V	Fuel tank pressure sensor signal voltage	V	×	×
FUELPW1	Fuel injector pulse width	ms	×	×
GEAR	Gear position (Mode)	Mode		×
HDLMP	Headlights switch	ON/OFF	×	×

Monitor item	Full name	Unit/Condition	Application	
			MTX	ATX
HFC	Condenser fan relay	ON/OFF	×	×
HFCF	Condenser fan relay (Failed detected)	YES/NO	×	×
HTR11	Heated oxygen sensor (Front)	ON/OFF	×	×
HTR11F	Heated oxygen sensor (Front) (Failed detected)	YES/NO	×	×
HTR12	Heated oxygen sensor (Rear)	ON/OFF	×	×
HTR12F	Heated oxygen sensor (Rear) (Failed detected)	YES/NO	×	×
IAC	Idle air control valve (Duty cycle)	%	×	×
IACF	Idle air control valve (Failed detected)	YES/NO	×	×
IAT	Intake air temperature	°F	×	×
IAT V	Intake air temperature signal voltage	V	×	×
INJ1F	Fuel injector #1 (Failed detected)	YES/NO	×	×
INJ2F	Fuel injector #2 (Failed detected)	YES/NO	×	×
INJ3F	Fuel injector #3 (Failed detected)	YES/NO	×	×
INJ4F	Fuel injector #4 (Failed detected)	YES/NO	×	×
LFC	Cooling fan relay	ON/OFF	×	×
LFCF	Cooling fan relay (Failed detected)	YES/NO	×	×
LOAD	Load (Air charge normalized to sea level)	%	×	×
LONGFT1	Adaptive Fuel correction multiplier	%	×	×
LOOP	Open loop fuel conditions met	OPEN/CLS	×	×
MAF	Mass air flow	gm/s	×	×
MAF V	Mass air flow sensor signal voltage	V	×	×
MIL	Malfunction indicator lamp	ON/OFF	×	×
MILF	Malfunction indicator lamp (Failed detected)	YES/NO	×	×
MISF	Currently misfiring	ON/OFF	×	×
O2S11	Heated oxygen sensor (Front) signal voltage	V	×	×
O2S12	Heated oxygen sensor (Rear) signal voltage	V	×	×
PIP	Profile ignition pickup signal	ON/OFF	×	×
PSP	Power steering pressure switch	ON/OFF	×	×
PSP V	Power steering pressure switch signal voltage	V	×	×
RDEF	Rear window defroster switch	ON/OFF	×	×
RPM	Engine speed	RPM	×	×
SHORTFT1	Bank 1 desired open loop equivalence ratio	%	×	×
SPRKADV	Spark advance	BTDC	×	×
SS1	Shift solenoid 1	ON/OFF		×
SS1F	Shift solenoid 1 (Failed detected)	YES/NO		×
SS2	Shift solenoid 2	ON/OFF		×
SS2F	Shift solenoid 2 (Failed detected)	YES/NO		×
TCC	Torque converter clutch solenoid	%		×
TCCF	Torque converter clutch solenoid (Failed detected)	YES/NO		×
TCCMCMD	Desired slip of torque converter clutch	RPM		×
TCIL	O/D OFF indicator light	ON/OFF		×
TCILF	O/D OFF indicator light (Failed detected)	YES/NO		×
TCS	O/D OFF switch	ON/OFF		×
TFT	Transaxle fluid temperature	°F		×
TFT V	Transaxle fluid temperature signal voltage	V		×
TP V	Throttle position sensor signal voltage	V	×	×
TP_MODE	Throttle position (Mode)	MODE	×	×
TPREL	Closed throttle position signal voltage	V	×	×

Monitor item	Full name	Unit/Condition	Application	
			MTX	ATX
TR	Transaxle range position (Mode)	MODE		×
TRIP	OBD II trip completed	YES/NO	×	×
TRIPCNT	Number of completed OBD II trips	#	×	×
TSS/ISS	Turbine/Input shaft speed	RPM	×	×
VPWR	Battery positive voltage	V	×	×
VSS	Vehicle speed	MPH	×	×
WAC	A/C relay	ON/OFF	×	×

PID/DATA MONITOR table (Reference)

Monitor item	Reference Value/Condition
ACCS	A/C switch ON: ON Others: OFF
BARO	Ignition switch ON: Approx. 150Hz
BLWMTR	Fan switch ON at 3rd or higher: ON Others: OFF
BOO	Brake pedal depressed: ON Others: OFF
CCS	Ignition switch ON: 65475 psi
CPP/PNP	Shift lever in neutral position/Clutch pedal depressed: ON Others: OFF
DRIVECT	Indicates total number of OBD II drive mode completed
DRLMP	Daytime running lights ON: ON (For CANADA) Others: OFF
DTC CNT	Indicates total number of diagnostic trouble codes (DTC) stored in PCM (Includes pending codes)
ECT	After warm up: Approx. 85 °C {185 °F}
ECT V	Engine coolant temperature 20 °C {68 °F}: Approx. 3.1 V After warm up: Below 1.0 V
EGR	Indicates barometric pressure (Except OBD II EGR monitor testing)
EGRBARO	During OBD II EGR monitor testing: OFF Others: OFF
EGRCD1	Ignition switch ON: OFF Idle: OFF
EGRCD2	Ignition switch ON: OFF Idle: ON
EGRCD3	Ignition switch ON: OFF Idle: OFF
EGRCD4	Ignition switch ON: OFF Idle: ON
EPC	Idle (After warm up): 0—5 kPa {0—0.7 psi}
EPC V	Idle (After warm up): Approx. 9 V
EVAPCPF	Purge control system output circuit failed: YES Others: NO
EVAPCV	Ignition switch ON: 0% During OBD II evaporative monitor testing: 100%
EVAPPDC	Idle (After warm up): 0—100%
FLI	Full fuel: Approx. 90%
FLI V	Full fuel: Approx. 6 V
FP	Ignition switch ON: 0% Cranking or idling: 100%
FPF	Fuel pump circuit failed: YES Others: NO

Monitor item	Reference Value/Condition
FPRC	Ignition switch ON: ON Idle (After warm up): OFF Idle (Hot condition): ON
FTP V	Fuel tank pressure 0 kPa {0 mmHg, 0 inHg}: Approx. 2.5 V
FUELPW1	Idle (After warm up): 2.0—4.0 msec.
GEAR	Selector lever in 2nd range: 2 Others: PRND
HDLMP	Headlights ON: ON Others: OFF
HFC	Condenser fan operating: ON Others: OFF
HFCF	Condenser fan circuit failed: YES Others: NO
HTR11	Heated oxygen sensor heater (Front) ON: ON Others: OFF
HTR11F	Heated oxygen sensor heater (Front) failed: YES Others: NO
HTR12	Heated oxygen sensor heater (Rear) ON: ON Others: OFF
HTR12F	Heated oxygen sensor heater (Rear) failed: YES Others: NO
IAC	Ignition switch ON: 0% Idle (After warm up): Approx. 40%
IACF	IAC system failed: YES Others: NO
IAT	Indicates intake air temperature
IAT V	Intake air temperature 20 °C {68 °F}: Approx. 3.1 V
INJ1F	Fuel injector #1 circuit failed: YES Others: NO
INJ2F	Fuel injector #2 circuit failed: YES Others: NO
INJ3F	Fuel injector #3 circuit failed: YES Others: NO
INJ4F	Fuel injector #4 circuit failed: YES Others: NO
LFC	Cooling fan operating: ON Others: OFF
LFCF	Cooling fan circuit failed: YES Others: NO
LOAD	Idle (After warm up): Approx. 18%
LONGFT1	Idle (After warm up): +5%— −5%
LOOP	During feedback control: CLOSED Others: OPEN
MAF	Idle (After warm up): 1.9—3.0 Gm/s (MTX), 2.2—3.1 Gm/s (ATX)
MAF V	Idle (After warm up): 0.6—1.1 V
MIL	MIL ON: ON Others: OFF
MILF	MIL circuit failed: YES Others: NO
MISF	When misfire detected: ON Others: OFF
O2S11	Idle (After warm up): 0.1—0.9 V
O2S12	Idle (After warm up): 0.1—0.9 V
PIP	Idle: ON⇔OFF
PSP	Power steering operating: ON Others: OFF

Monitor item	Reference Value/Condition
PSP V	Power steering operating: 0 V Others: 4.0 V
RDEF	Rear window defroster ON: ON Others: OFF
RPM	Idle (After warm up): 550—850 (700 ± 150) rpm (MTX), 500—800 (650 ± 150) rpm (ATX)
SHORTFT1	Idle: +20%— –20%
SPRKADV	Idle (After warm up): 6—18° (12 ± 6°)
SS1	In 1st gear or 4th gear: ON Others: OFF
SS1F	Shift solenoid 1 circuit failed: YES Others: NO
SS2	In 1st gear or 2nd gear: ON Others: OFF
SS2F	Shift solenoid 2 circuit failed: YES Others: NO
TCC	Idle: 0%
TCCF	Torque converter clutch solenoid circuit failed: YES Others: NO
TCCMCMD	Idle (Afetr warm up): Approx. 250 rpm
TCIL	O/D OFF indicator light ON: ON Others: OFF
TCILF	O/D OFF indicator light circuit failed: YES Others: NO
TCS	O/D OFF switch pushed: ON Others: OFF
TFT	Idle (After warm up): Approx. 70 °C {150 °F}
TFT V	After warm up: Approx. 1.9 V
TP V	Closed throttle position: 0.3—0.7 V Wide open throttle: 3.4—5.3 V
TP MODE	Closed throttle position: C/P Half throttle position: H/T Wide open throttle: WOT
TPREL	Idle: Approx. 0.49 V
TR	Selector lever in P position: PARK Selector lever in R position: REV Selector lever in N position: NTRL Selector lever in D range and O/D ON: O/D Selector lever in D range and O/D OFF: DRIVE Selector lever in 3 range: MAN2 Selector lever in 1 range: MAN1
TRIP	OBD II trip cycle completed: YES Others: NO
TRIPCNT	Indicates the total number of OBD II trip cycle completed
TSS/ISS	Idle (After warm up): Approx. 620 rpm
VPWR	Approx. 13 V
VSS	Indicates vehicle speed
WAC	A/C relay ON: ON Others: OFF

MASS AIR FLOW SENSOR INSPECTION [FS]

W6U140W04

Using the SST (104 Pin Breakout Box)

1. Check the mass air flow sensor for damage and cracks.
2. Remove the PCM. (Refer to 01–40A POWERTRAIN CONTROL MODULE (PCM) REMOVAL/INSTALLATION [FS].)
3. Connect the **SST** (104 Pin Breakout Box) to the PCM as shown.

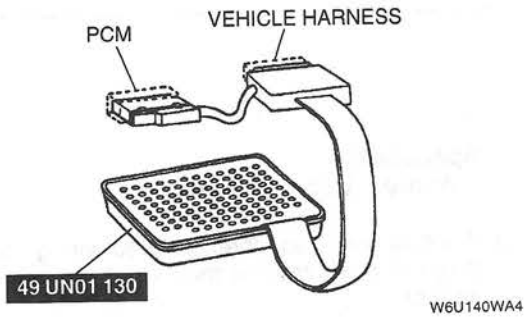

W6U140WA4

4. Tighten the connector bolt.

Tightening torque
7.9—10.7 N·m
{80—110 kgf·m, 69.5—95.4 in·lbf}

5. Measure the voltage at the PCM terminal 88 as shown in the table.

Specification

Measuring condition	Voltage (V)
Ignition switch ON	Approx. 0.02
Idle	0.6—1.1

6. If not as specified, inspect the following.
   (1) Harness continuity
   - Between PCM terminal 88 and mass air flow sensor terminal E
   - Between PCM terminal 36 and mass air flow sensor terminal D
   - Between PCM terminal 103 and mass air flow sensor terminal C
   - Between main relay terminal E and mass air flow sensor terminal B

   (2) Terminal voltage
   - Mass air flow sensor terminal B voltage: Battery positive voltage
   - Mass air flow sensor terminal C voltage: Below 1.0 V

7. If the terminal voltage is correct and there is harness continuity, replace the mass air flow sensor. (Refer to 01–13A INTAKE-AIR SYSTEM REMOVAL/INSTALLATION [FS].)

Using the SST (NGS Tester)

1. Check the mass air flow sensor for damage and cracks.
2. Connect the **SSTs** (NGS tester) to the data link connector.

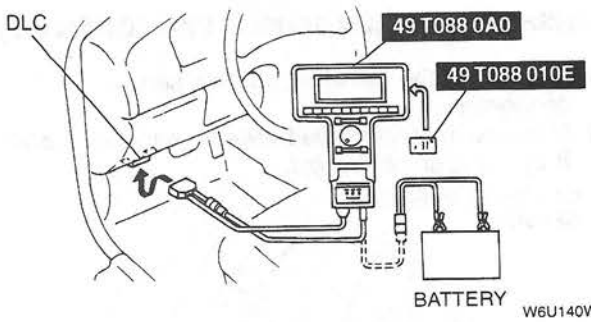

W6U140WA6

3. Turn the ignition switch to ON.
4. Select the "PID/DATA MONITOR AND RECORD" function on the NGS tester display and press TRIGGER.
5. Select "MAF V" on the NGS tester display and press START. The NGS tester measures and show the voltage.

Specification

Measuring condition	Voltage (V)
Ignition switch ON	Approx. 0.02
Idle	0.6—1.1

6. If not as specified, inspect the following.
   (1) Harness continuity
   - Between PCM terminal 88 and mass air flow sensor terminal E
   - Between PCM terminal 36 and mass air flow sensor terminal D
   - Between PCM terminal 103 and mass air flow sensor terminal C
   - Between main relay terminal E and mass air flow sensor terminal B

   (2) Terminal voltage
   - Mass air flow sensor terminal B voltage: Battery positive voltage
   - Mass air flow sensor terminal C voltage: Below 1.0 V

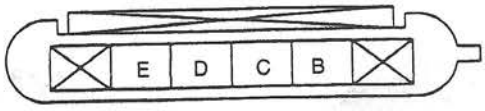

W6U140WA5

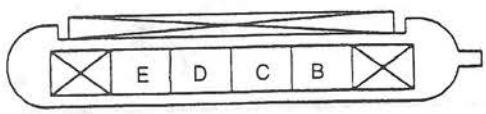

W6U140WA7

7. If the terminal voltage is correct and there is harness continuity, replace the mass air flow sensor. (Refer to 01–13A INTAKE-AIR SYSTEM REMOVAL/INSTALLATION [FS].)

Note
- The NGS shows the mass air flow rate and load value.

Specification

Engine speed (rpm)	Intake mass air flow (g/s)		Engine load calculated value (%)	
	MTX	ATX	MTX	ATX
650—750 (Idle)	1.9—3.0	2.2—3.1	15.0—19.0	18.0—23.0
2460—2540*	6.7—9.1	8.7—9.8	14.0—18.0	17.0—20.0

* : No load, in neutral

CAMSHAFT POSITION SENSOR INSPECTION [FS]

W6U140W05

1. Disconnect the camshaft position sensor connector.
2. Measure the resistance between terminals A and B by using an ohmmeter.

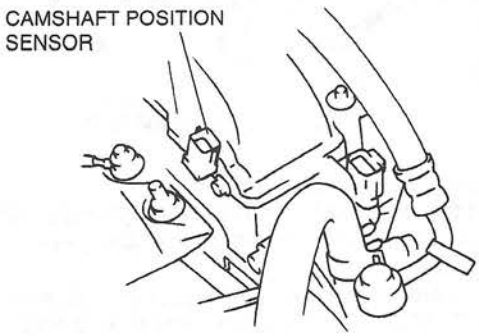

W6U140WA8

Specification
Approx. 0.95—1.25 kΩ

3. If not as specified, check related wiring harness. If they are okay, replace the camshaft position sensor.

Tightening torque
7.9—10.7 N·m
{80—110 kgf·cm, 69.5—95.4 in·lbf}

KNOCK SENSOR INSPECTION [FS]

W6U140W06

1. Verify that the ignition switch is at OFF.
2. Disconnect knock sensor connector.
3. Measure the resistance between knock sensor terminal and the knock sensor body by using an ohmmeter.

Specification
Approx. 560 kΩ [20 °C {68 °F}]

4. If not as specified, replace the knock sensor. (Refer to 01–40A KNOCK SENSOR REPLACEMENT [FS].)

KNOCK SENSOR REPLACEMENT [FS]

W6U140W07

1. Remove the oil filter element.
2. Use the **SST** to remove and install the knock sensor.

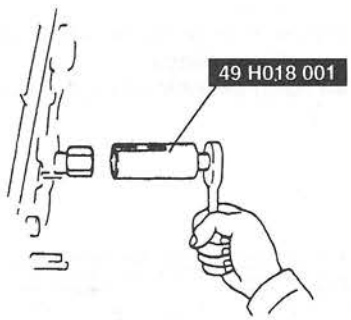

W6U140WBK

Tightening torque
19.6—34.3 N·m {2.0—3.5 kgf·m, 15—25 ft·lbf}

3. Install the oil filter element.

CRANKSHAFT POSITION SENSOR INSPECTION [FS]

W6U140W08

Inspection of Resistance

1. Disconnect the battery negative cable.
2. Disconnect the crankshaft position sensor connector.
3. Measure the resistance between terminals A and B by using an ohmmeter.

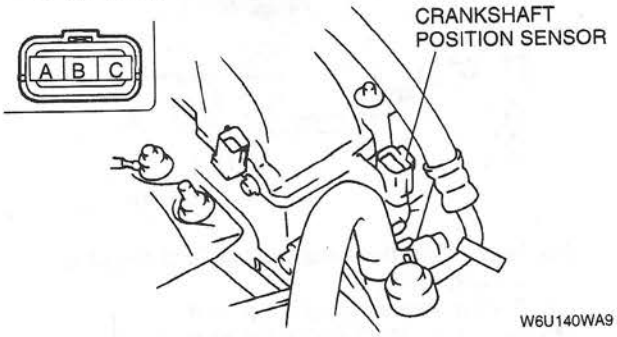

W6U140WA9

Specification
Approx. 550 Ω

4. If not as specified, check related wiring harness. If they are okay, replace the crankshaft position sensor. (Refer to CRANKSHAFT POSITION SENSOR REPLACEMENT [FS].)

Inspection of Air Gap

1. Verify that the crankshaft position sensor is installed correctly and securely.
2. Measure the air gap between the crankshaft pulley projection and the crankshaft position sensor by using a feeler gauge.

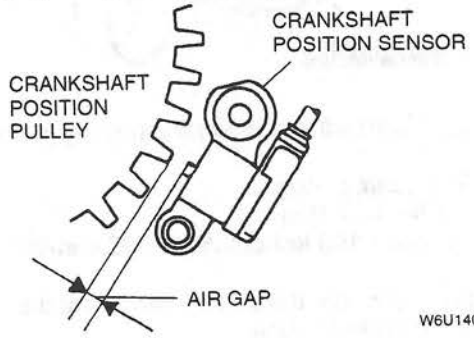

W6U140WAA

Specification
0.5—1.5 mm {0.020—0.059 in}

3. If not as specified, replace the crankshaft pulley or the crankshaft position sensor. (Refer to 01–40A CRANKSHAFT POSITION SENSOR REPLACEMENT [FS].)

CRANKSHAFT POSITION SENSOR REPLACEMENT [FS]

W6U140W09

1. Disconnect the negative battery cable.
2. Disconnect the crankshaft position sensor connector.
3. Remove the crankshaft position sensor.
4. Install in the reverse order of removal.

Tightening torque
7.9—10.7 N·m
{80—100 kgf·cm, 69.5—95.4 in·lbf}

5. Inspect the air gap. (Refer to 01–40A CRANKSHAFT POSITION SENSOR INSPECTION [FS]), Inspection of Air Gap.)

THROTTLE POSITION SENSOR INSPECTION [FS]

W6U140W10

Inspection of Resistance

1. Disconnect the battery negative cable.
2. Disconnect the throttle position sensor connector.
3. Using an ohmmeter, measure the resistance between throttle position sensor terminal A and C.

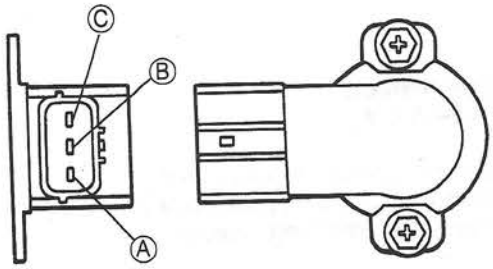

W6U140WAB

Specification
4.0—6.0 kΩ

4. If not as specified, replace the throttle position sensor.
5. Reconnect the throttle position sensor connector.

Inspection of Output Voltage

1. If the **SST** (104 Pin Breakout Box) are used, check in the following order.
   (1) Remove the PCM. (Refer to 01–40A POWERTRAIN CONTROL MODULE (PCM) REMOVAL/INSTALLATION [FS].)
   (2) Connect the **SST** (104 Pin Breakout Box) to the PCM as shown.

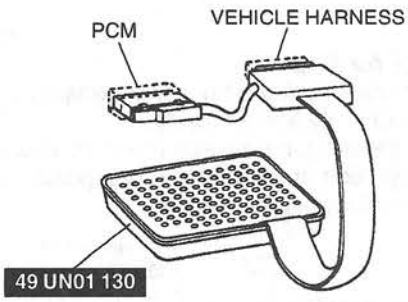

W6U140WAC

(3) Tighten the connector attaching screws.

Tightening torque
7.9—10.7 N·m
{80—100 kgf·cm, 69.5—95.4 in·lbf}

(4) Verify that the throttle valve is at the closed throttle position.
(5) Turn the ignition switch to ON.
(6) Measure the PCM terminal 89 voltage by using a voltmeter.

Specification
Closed throttle position: 0.3—0.7 V
Wide open throttle: 3.4—5.3 V
(Verify that the voltage increase is directly proportioned to the throttle valve opening angle.)

(7) If not as specified, adjust the throttle position sensor.

2. If the **SSTs** (NGS tester) are used, check in the following order.
(1) Connect the **SSTs** (NGS tester) to the data link connector.

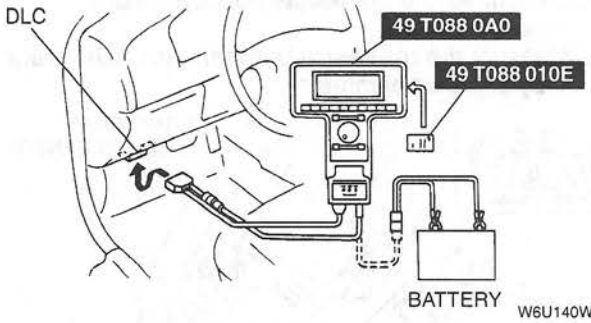

W6U140WAE

(2) Verify that the throttle valve is at the closed throttle position.
(3) Turn the ignition switch to ON.
(4) Select the "PID/DATA MONITOR AND RECORD" function on the NGS tester display and press TRIGGER.
(5) Select "TP V" on the NGS tester display and press START. NGS tester measures and shows the voltage.

Specification
Closed throttle position: 0.3—0.7 V
Wide open throttle: 3.4—5.3 V
(Verify that the voltage increase is directly proportioned to the throttle valve opening angle.)

(6) If not as specified, adjust the throttle position sensor.

THROTTLE POSITION SENSOR ADJUSTMENT [FS]

W6U140W11

Caution
- **The throttle position sensor is adjusted at the factory before shipment. Unnecessary adjustment will negatively effect the engine performance.**
- **Adjusting the throttle position sensor by using the throttle adjusting screw (TAS) will negatively effect the engine performance.**

1. Verify that the throttle valve is at the closed throttle position.
2. Disconnect the throttle position sensor connector.
3. Turn the ignition switch to ON.
4. Measure the voltage at harness side connector terminal A by using an ohmmeter and record it.

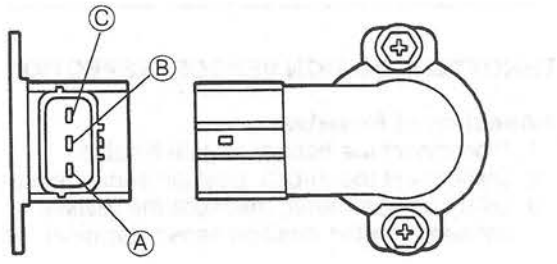

W6U140WAD

Specification
4.5—5.5 V

5. Turn the ignition switch to OFF.
6. Connect the throttle position sensor connector.
7. Loosen the attaching screws.

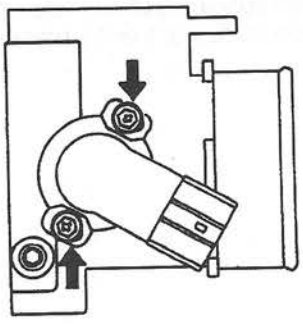

W6U140WAF

8. If the **SST** (104 Pin Breakout Box) are used, check in the following order.
   (1) Remove the PCM. (Refer to 01–40A POWERTRAIN CONTROL MODULE (PCM) REMOVAL/INSTALLATION [FS].)
   (2) Connect the **SST** (104 Pin Breakout Box) to the PCM as shown.

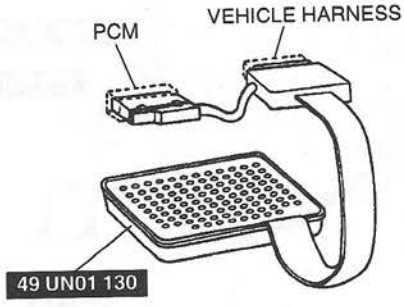

W6U140WAG

   (3) Tighten the connector bolt.

Tightening torque
7.9—10.7 N·m
{80—100 kgf·cm, 69.5—95.4 in·lbf}

   (4) Verify that the throttle valve is at the closed throttle position.
   (5) Turn the ignition switch to ON.
   (6) Rotate the throttle link by hand and adjust the PCM terminal 89 voltage to specification.

Specification (At closed throttle position)

Throttle position sensor harness side connector terminal A voltage (V)	PCM terminal 89 voltage (V)
4.5—4.9	0.4—0.5
4.9—5.1	0.4—0.6
5.1—5.5	0.5—0.6

   (7) Tighten the attaching screws.

Specification
1.6—2.3 N·m {16—24 kgf·cm, 14—21 in·lbf}

   (8) When the throttle valve is at the wide open throttle, verify that the PCM terminal 89 voltage is in the specification.

Specification (At wide open throttle)

Throttle position sensor harness side connector terminal A voltage (V)	PCM terminal 89 voltage (V)
4.5—4.7	3.5—4.4
4.7—4.8	3.6—4.5
4.8—4.9	3.7—4.6
4.9—5.0	3.7—4.8
5.0—5.1	3.8—4.9
5.1—5.3	4.0—5.0
5.3—5.4	4.1—5.1
5.4—5.5	4.2—5.2

   (9) If not as specified, check related wiring harness. If they are okay, replace the throttle body.
9. If the **SSTs** (NGS tester) are used, check in the following order.
   (1) Connect the **SSTs** (NGS tester) to the data link connector.

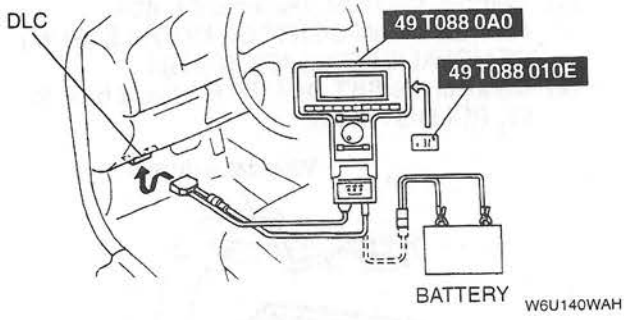

W6U140WAH

   (2) Verify that the throttle valve is at the closed throttle position.
   (3) Turn the ignition switch to ON.
   (4) Select the "PID/DATA MONITOR AND RECORD" function on the NGS tester display and press TRIGGER.
   (5) Select "TP V" on the NGS tester display and press START. The NGS tester measures and shows the voltage.

Specification (At closed throttle position)

Throttle position sensor harness side connector terminal A voltage (V)	"TP V" voltage (V)
4.5—4.9	0.4—0.5
4.9—5.1	0.4—0.6
5.1—5.5	0.5—0.6

   (6) Tighten the attaching screws.

Specification
1.6—2.3 N·m {16—24 kgf·cm, 14—21 in·lbf}

   (7) When the throttle valve is at the wide open throttle, verify that the "TP V" voltage is in the specification.

Specification (At wide open throttle)

Throttle position sensor harness side connector terminal A voltage (V)	"TP V" voltage (V)
4.5—4.7	3.5—4.4
4.7—4.8	3.6—4.5
4.8—4.9	3.7—4.6
4.9—5.0	3.7—4.8
5.0—5.1	3.8—4.9
5.1—5.3	4.0—5.0
5.3—5.4	4.1—5.1
5.4—5.5	4.2—5.2

(8) If not as specified, check related wiring harness. If they are okay, replace the throttle body.

ENGINE COOLANT TEMPERATURE SENSOR INSPECTION [FS]

Inspection of Output Voltage

1. If the **SST** (104 Pin Breakout Box) are used, check in the following order.
   (1) Remove the PCM. (Refer to 01–40A POWERTRAIN CONTROL MODULE (PCM) REMOVAL/INSTALLATION [FS].)
   (2) Connect the **SST** (104 Pin Breakout Box) to the PCM as shown.

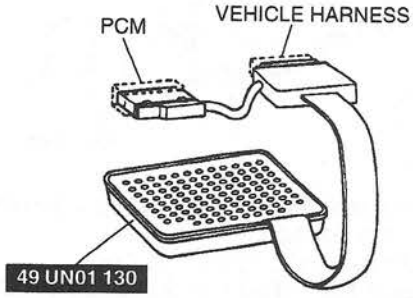

W6U140WAJ

   (3) Tighten the connector bolt.

Tightening torque
7.9—10.7 N·m
{80—100 kgf·cm, 69.5—95.4 in·lbf}

   (4) Turn the ignition switch to ON.
   (5) Measure the voltage at PCM terminal 38.

Specification

Engine coolant temperature condition	PCM terminal 38 voltage (V)
20 °C {68 °F}	Approx. 3.1
After warm up	Below 1.0

   (6) If not as specified, check the related harness and engine coolant temperature sensor resistance.
2. If the **SSTs** (NGS tester) are used, check in the following order.
   (1) Connect the **SSTs** (NGS tester) to the data link connector.

W6U140W12

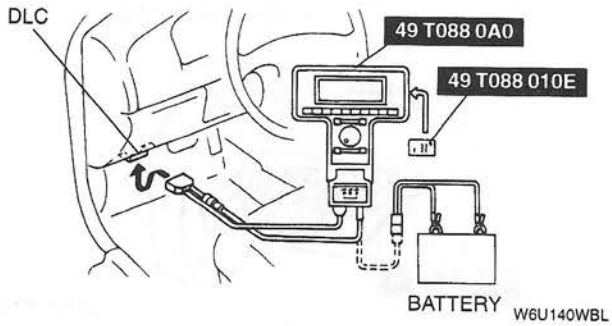

W6U140WBL

   (2) Turn the ignition switch to ON.
   (3) Select the "PID/DATA MONITOR AND RECORD" function on the NGS tester display and press TRIGGER.
   (4) Select "ECT V" on the NGS tester display and press START. The NGS tester measures and shows the voltage.

Specification

Engine coolant temperature condition	"ECT V" voltage (V)
20 °C {68 °F}	Approx. 3.1
After warm up	Below 1.0

   (5) If not as specified, check the related harness and engine coolant temperature sensor resistance.

Inspection of Resistance

1. Remove the engine coolant temperature sensor.
2. Place the engine coolant temperature sensor in water with a thermometer, and heat the water gradually.
3. Measure the resistance of the sensor by using an ohmmeter.

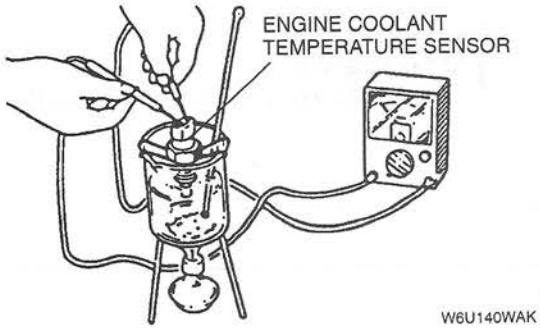

W6U140WAK

Specification

Water temperature (°C {°F})	Resistance (kΩ)
20 {68}	35.5—39.2
60 {140}	7.18—7.92

4. If not as specified, replace the engine coolant temperature sensor.

Tightening torque
15.7—23.5 N·m
{1.6—2.4 kgf·m, 11.6—17.3 ft·lbf}

INTAKE AIR TEMPERATURE SENSOR INSPECTION [FS]

W6U140W13

Inspection of Output Voltage

1. If the **SST** (104 Pin Breakout Box) are used, check in the following order.
   (1) Remove the PCM. (Refer to 01–40A POWERTRAIN CONTROL MODULE (PCM) REMOVAL/INSTALLATION [FS].)
   (2) Connect the **SST** (104 Pin Breakout Box) to the PCM as shown.

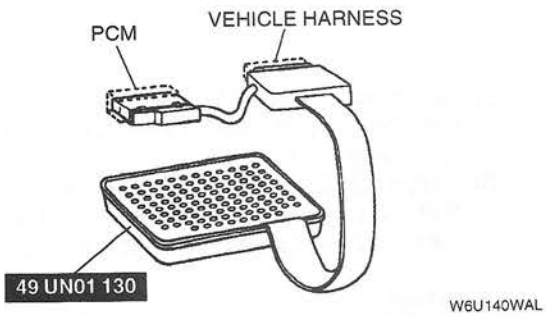

W6U140WAL

   (3) Tighten the connector bolt.

Tightening torque
7.9—10.7 N·m
{80—100 kgf·cm, 69.5—95.4 in·lbf}

   (4) Turn the ignition switch to ON.
   (5) Measure the voltage at PCM terminal 39.

Specification

Intake air temperature condition	PCM terminal 39 voltage (V)
20 °C {68 °F}	Approx. 3.1

   (6) If not as specified, check the related harness and intake air temperature sensor resistance.
2. If the **SSTs** (NGS tester) are used, check in the following order.
   (1) Connect the **SSTs** (NGS tester) to the data link connector.

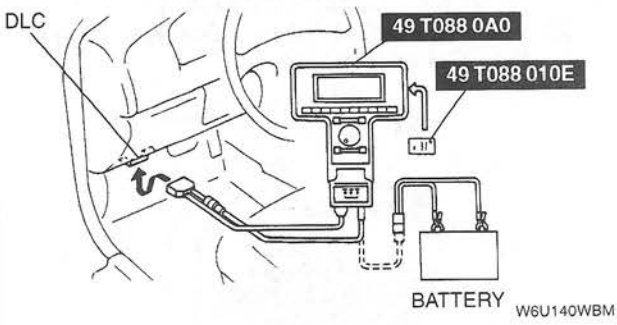

W6U140WBM

   (2) Turn the ignition switch to ON.
   (3) Select the "PID/DATA MONITOR AND RECORD" function on the NGS tester display and press TRIGGER.
   (4) Select "IAT V" on the NGS tester display and press START. The NGS tester measures and shows the voltage.

Specification

Intake air temperature condition	"IAT V" voltage (V)
20 °C {68 °F}	Approx. 3.1

   (5) If not as specified, check the related harness and intake air temperature sensor resistance.

Inspection of Resistance

1. Remove the intake air temperature sensor.
2. Place the intake air temperature sensor in water with a thermometer, and heat the water gradually.
3. Measure the resistance of the intake air temperature sensor by using an ohmmeter.

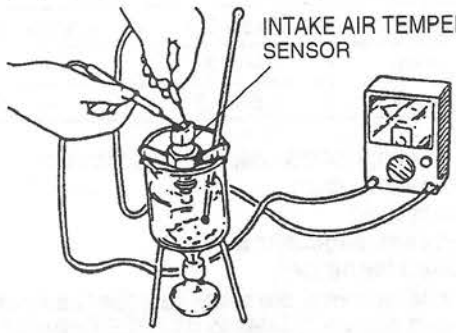

W6U140WAM

Specification

Water temperature (°C {°F})	Resistance (kΩ)
20 {68}	35.5—39.2
60 {140}	7.18—7.92

4. If not as specified, replace the intake air temperature sensor.

Tightening torque
10.8—16.2 N·m
{110—166 kgf·cm, 95.5—144 in·lbf}

HEATED OXYGEN SENSOR INSPECTION [FS]

Heated Oxygen Sensor Inspection

1. If the **SST** (104 Pin Breakout Box) are used, check in the following order.
   (1) Remove the PCM. (Refer to 01–40A POWERTRAIN CONTROL MODULE (PCM) REMOVAL/INSTALLATION [FS].)
   (2) Connect the **SST** (104 Pin Breakout Box) to the PCM as shown.

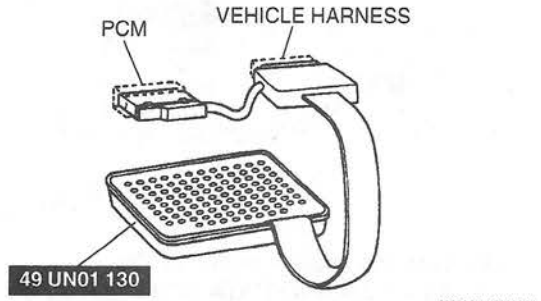

W6U140WAN

   (3) Tighten the connector bolt.

Tightening torque
7.9—10.7 N·m
{80—100 kgf·cm, 69.5—95.4 in·lbf}

   (4) Warm up the engine to normal operating temperature.
   (5) Measure the voltage at PCM terminal 35 and 60.

Specification

Engine condition		PCM terminal voltage (V)	
		60	35
		Heated oxygen sensor (Front)	Heated oxygen sensor (Rear)
IG–ON		Below 1.0	
Idle	After warm up	0.1—0.9	
	Engine cold	Below 0.5	Approx. 0
Deceleration		0—0.5	—
Acceleration		0.5—1.0	—

   (6) If not as specified, inspect the following.
   - Intake-air system
   - Fuel system
   - On-board diagnostic system
   - Related harnesses

   (7) If these systems are okay, replace the heated oxygen sensor. (Refer to 01–15 EXHAUST SYSTEM REMOVAL/INSTALLATION [FS].)

W6U140W14

2. If the **SSTs** (NGS tester) are used, check in the following order.
   (1) Connect the **SSTs** (NGS tester) to the data link connector.

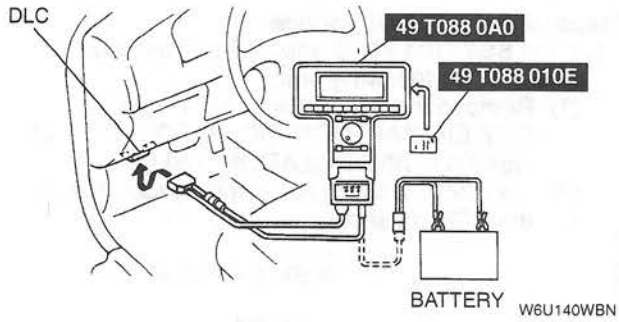

W6U140WBN

   (2) Select the "PID/DATA MONITOR AND RECORD" function on the NGS tester display and press TRIGGER.
   (3) Select "O2S11", and "O2S12" on the NGS tester display and press START. The NGS tester measures and shows the voltage.

Specification

Engine condition		Voltage (V)	
		O2S11	O2S12
IG–ON		Below 1.0	
Idle	After warm up	0.1—0.9	
	Engine cold	Below 0.5	Approx. 0
Deceleration		0—0.5	—
Acceleration		0.5—1.0	—

   (4) If not as specified, inspect the following.
   - Intake-air system
   - Fuel system
   - On-board diagnostic system

   (5) If these systems are okay, replace the heated oxygen sensor. (Refer to 01–15 EXHAUST SYSTEM REMOVAL/INSTALLATION [FS].)

Heated Oxygen Sensor Heater Inspection

1. Disconnect the heated oxygen sensor connector.
2. Measure the resistance between heated oxygen sensor terminals C and D for 4-pin connector or B and C for 3-pin connector by using an ohmmeter.

FRONT (EXCEPT CALIFORNIA)
REAR

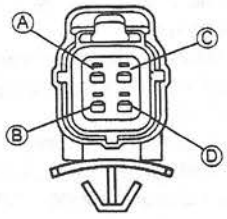

COMPONENT SIDE CONNECTOR
(VIEW FROM TERMINALS SIDE) W6U140WC0

FRONT (FOR CALIFORNIA)

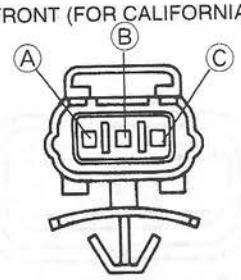

COMPONENT SIDE CONNECTOR
(VIEW FROM TERMINAL SIDE) W6U140WC1

Specification
Approx. 6 Ω

3. If not as specified, replace the heated oxygen sensor. (Refer to 01–15 EXHAUST SYSTEM REMOVAL/INSTALLATION [FS].)

EGR BOOST SENSOR INSPECTION [FS]

W6U140W15

Note
- The following vacuum values are indicated by relative pressure from atmospheric pressure.

1. Remove the PCM. (Refer to 01–40A POWERTRAIN CONTROL MODULE (PCM) REMOVAL/INSTALLATION [FS].)
2. Connect the **SST** (104 Pin Breakout Box) to the PCM as shown.

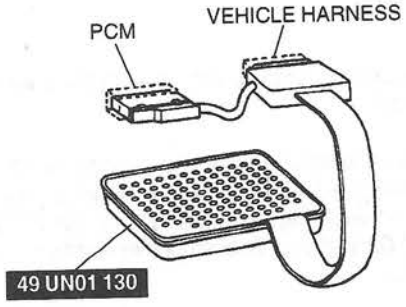

W6U140WAQ

3. Tighten the connector bolt.

Tightening torque
7.9—10.7 N·m
{80—100 kgf·cm, 69.5—95.4 in·lbf}

Caution
- **Do not apply a vacuum outside of the specified limits. Doing so will damage the EGR boost sensor.**

4. Turn the ignition switch to ON.
5. Apply vacuum to the EGR boost sensor according to the following procedure.

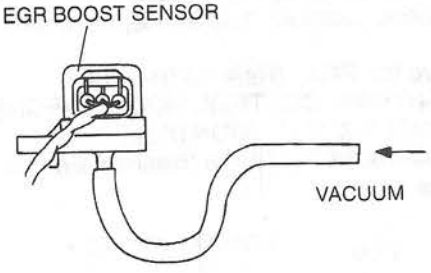

W6U140WAR

Note
- The output voltage varies with the measuring condition.

6. Increase the applied vacuum from 0 kPa {0 mmHg, 0 inHg} to –81.3 kPa {–610 mmHg, –24.0 inHg} and verify that the PCM terminal 89 voltage decreases accordingly as specified.

Specification

Applied vacuum	Output voltage (V)*
0 kPa {0 mmHg, 0 inHg}	3.600—4.400
–54.7 kPa {–410 mmHg, –16.1 inHg}	1.658—2.026
–81.3 kPa {–610 mmHg, –24.0 inHg}	0.711—0.867

* : Measuring condition is following.
- Input voltage: 5.0 V
- Atmospheric pressure: 101.3 kPa {760 mmHg, 29.9 inHg} (Absolute pressure)
- Atmospheric temperature: 25 °C {77 °F}

7. If not as specified, perform the following inspection.

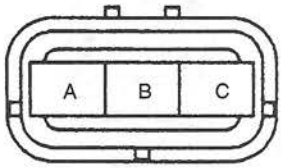

HARNESS SIDE CONNECTOR
(VIEW FROM VEHICLE HARNESS CONNECTOR)

W6U140WAT

(1) Harness continuity
- Between PCM terminal 34 and EGR boost sensor terminal A
- Between PCM terminal 91 and EGR boost sensor terminal B
- Between PCM terminal 90 and EGR boost sensor terminal C

(2) If there is no continuity, repair or replace related harness.
(3) Terminal voltage (Ignition switch ON)
- EGR boost sensor terminal B voltage: Ground (Below 1.0 V)
- EGR boost sensor terminal C voltage: Constant voltage (4.5—5.5 V)

(4) If terminal voltage is incorrect, check the PCM.

8. If terminal voltage is correct and if there is harness continuity, replace the EGR boost sensor.

FUEL TANK PRESSURE SENSOR INSPECTION [FS]

Using the SST (104 Pin Breakout Box)

Note
- The following vacuum values are indicated by relative pressure from atmospheric pressure.

1. Remove the PCM. (Refer to 01–40A POWERTRAIN CONTROL MODULE (PCM) REMOVAL/INSTALLATION [FS].)
2. Connect the **SST** (104 Pin Breakout Box) to the PCM as shown.

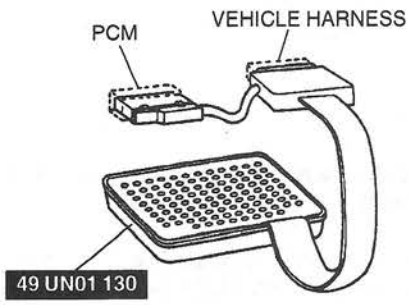

W6U140WAU

3. Tighten the connector bolt.

Tightening torque
7.9—10.7 N·m
{80—100 kgf·cm, 69.5—95.4 in·lbf}

Caution
- **Do not apply a vacuum outside of the specified limits. Doing so will damage the fuel tank pressure sensor.**

4. Turn the ignition switch to ON.
5. Apply pressure then a vacuum to the fuel tank pressure sensor according to the following procedure.

W6U140W16

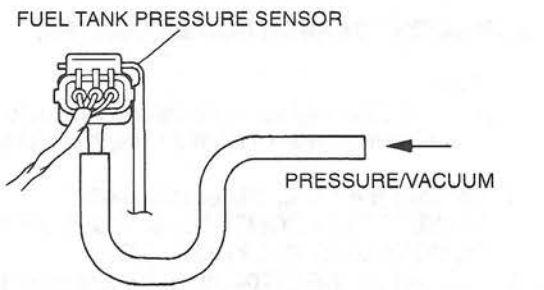

W6U140WAV

Note
- The output voltage varies with the measuring condition.

6. Decrease the applied pressure from +6.66 kPa {+50 mmHg, +1.97 inHg} to –6.66 kPa {–50 mmHg, –1.97 inHg} and verify that the PCM terminal 62 voltage decreases accordingly as specified.

Specification

Applied vacuum	Output voltage (V)*
–6.66 kPa {–50 mmHg, –1.97 inHg}	0.45—0.55
0 kPa {0 mmHg, 0 inHg}	2.25—2.75
+6.66 kPa {+50 mmHg, +1.97 inHg}	4.05—4.95

* : Measuring condition is following.
- Input voltage: 5.0 V
- Atmospheric pressure: 101.3 kPa {760 mmHg, 29.9 inHg} (Absolute pressure)
- Atmospheric temperature: 30—100 °C {0—182 °F}

7. If not as specified, perform the following inspection.

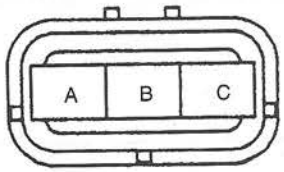

HARNESS SIDE CONNECTOR
(VIEW FROM VEHICLE HARNESS CONNECTOR)

W6U140WAW

(1) Harness continuity
- Between PCM terminal 91 and fuel tank pressure sensor terminal A
- Between PCM terminal 62 and fuel tank pressure sensor terminal B
- Between PCM terminal 90 and fuel tank pressure sensor terminal C

(2) If there is no continuity, repair or replace related harness.
(3) Terminal voltage (Ignition switch ON)
- Fuel tank pressure sensor terminal A voltage: Ground (Below 1.0 V)
- Fuel tank pressure sensor terminal C voltage: Constant voltage (4.5—5.5 V)

(4) If terminal voltage is incorrect, check the PCM.

8. If terminal voltage is correct and if there is harness continuity, replace the fuel tank pressure sensor.

Using the SSTs (NGS Tester)

Note
- The following vacuum values are indicated by relative pressure from atmospheric pressure.

1. Connect the **SSTs** (NGS tester) to the data link connector.

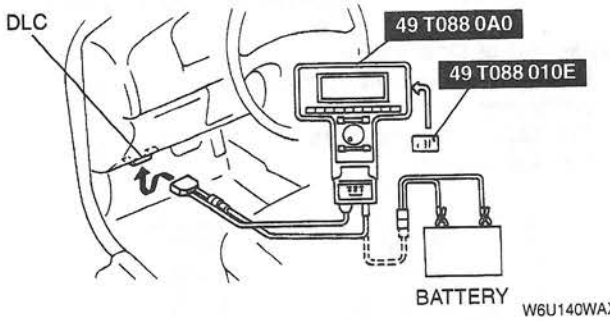

W6U140WAX

2. Select the "PID/DATA MONITOR AND RECORD" function on the NGS tester display and press TRIGGER.
3. Select "FTP V" on the NGS tester display and press START. The NGS tester measure and shows the voltage.
4. Turn the ignition switch to ON.

Caution
- **Do not apply a vacuum outside of the specified limits. Doing so will damage the fuel tank pressure sensor.**

5. Apply pressure then a vacuum to the fuel tank pressure sensor according to the following procedure.

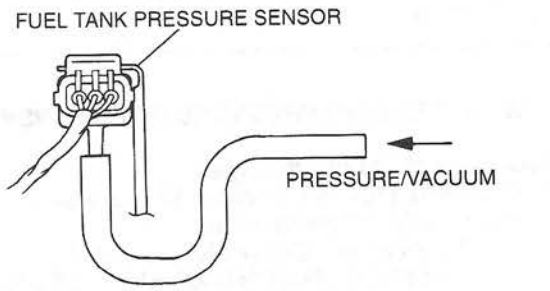

W6U140WAY

Note
- The output voltage varies with the measuring condition.

6. Decrease the applied pressure from +6.66 kPa {+50 mmHg, +1.97 inHg} to –6.66 kPa {–50 mmHg, –1.97 inHg} and verify that the "FTP V" voltage decreases accordingly as specified.

Specification

Applied vacuum	"FTP V" voltage (V)*
–6.66 kPa {–50 mmHg, –1.97 inHg}	0.45—0.55
0 kPa {0 mmHg, 0 inHg}	2.25—2.75
+6.66 kPa {+50 mmHg, +1.97 inHg}	4.05—4.95

* : Measuring condition is following.
- Input voltage: 5.0 V
- Atmospheric pressure: 101.3 kPa {760 mmHg, 29.9 inHg} (Absolute pressure)
- Atmospheric temperature: 30—100 °C {0—182 °F}

7. If not as specified, perform the following inspection.

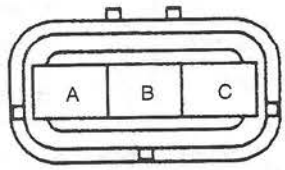

HARNESS SIDE CONNECTOR
(VIEW FROM VEHICLE HARNESS CONNECTOR)

W6U140WAZ

(1) Harness continuity
- Between PCM terminal 91 and fuel tank pressure sensor terminal A
- Between PCM terminal 62 and fuel tank pressure sensor terminal B
- Between PCM terminal 90 and fuel tank pressure sensor terminal C

(2) If there is no continuity, repair or replace related harness.
(3) Terminal voltage (Ignition switch ON)

- Fuel tank pressure sensor terminal A voltage: Ground (Below 1.0 V)
- Fuel tank pressure sensor terminal C voltage: Constant voltage (4.5—5.5 V)

(4) If terminal voltage is incorrect, check the PCM.

8. If terminal voltage is correct and if there is harness continuity, replace the fuel tank pressure sensor.

POWER STEERING PRESSURE SWITCH INSPECTION [FS]

W6U140W17

Inspection of Output Voltage

1. If the **SST** (104 Pin Breakout Box) are used, check in the following order.
   (1) Remove the PCM. (Refer to 01–40A POWERTRAIN CONTROL MODULE (PCM) REMOVAL/INSTALLATION [FS].)
   (2) Connect the **SST** (104 Pin Breakout Box) to the PCM as shown.

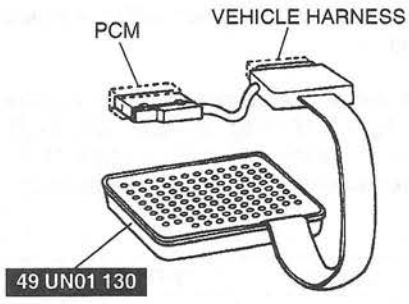

W6U140WA1

   (3) Tighten the connector bolt.

Tightening torque
7.9—10.7 N·m
{80—100 kgf·cm, 69.5—95.4 in·lbf}

   (4) Warm up the engine to normal operating temperature.
   (5) Turn the ignition switch to ON.
   (6) Measure the voltage at PCM terminal 31.

Specification

Steering wheel condition	PCM terminal 31 voltage (V)
Steering wheel fully turned	B+
Steering wheel straight ahead position	Below 1.0

   (7) If not as specified, check the related harness and power steering pressure switch continuity.

2. If the **SSTs** (NGS tester) are used, check in the following order.
   (1) Connect the **SSTs** (NGS tester) to the data link connector.

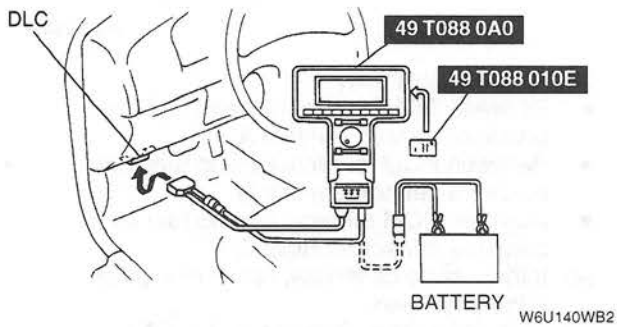

W6U140WB2

   (2) Warm up the engine to normal operating temperature.
   (3) Turn the ignition switch to ON.
   (4) Select the "PID/DATA MONITOR AND RECORD" function on the NGS tester display and press TRIGGER.
   (5) Select "PSP" on the NGS tester display and press START. The NGS tester measures and shows the operation.

Specification

Steering wheel condition	"PSP" operation
Steering wheel fully turned	OFF
Steering wheel straight ahead position	ON

   (6) If not as specified, check the related harness and power steering pressure switch continuity.

Inspection of Continuity

1. Disconnect the power steering pressure switch connector.
2. Connect an ohmmeter to the power steering pressure switch.

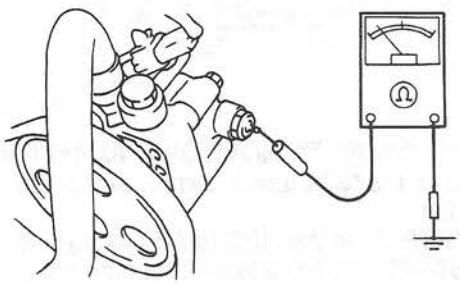

W6U140WB3

3. Start the engine and let it at idle. Check continuity of the power steering pressure switch while turning steering wheel.

Note
- Show wire and connector in diagram. It is easier to test from connector than the power steering pressure switch on the power steering oil pump.

○—○ : Continuity

Steering wheel condition	Terminal	
	A	Ground
Steering wheel fully turned	○	○
Steering wheel straight ahead position		

W6U140WB4

4. If not as specified, replace the power steering pressure switch. (Refer to 06–12 POWER STEERING OIL PUMP DISASSEMBLY/ASSEMBLY.)

NEUTRAL SWITCH INSPECTION [FS]

W6U140W18

Inspection of Output Voltage

1. If the **SST** (104 Pin Breakout Box) are used, check in the following order.
   (1) Remove the PCM. (Refer to 01–40A POWERTRAIN CONTROL MODULE (PCM) REMOVAL/INSTALLATION [FS].)
   (2) Connect the **SST** (104 Pin Breakout Box) to the PCM as shown.

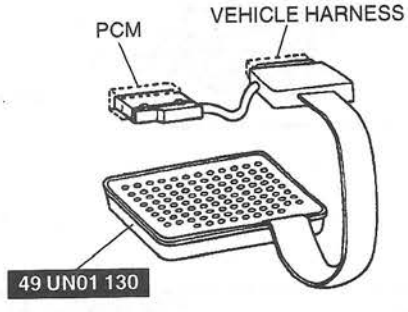

W6U140WB5

   (3) Tighten the connector bolt.

Tightening torque
7.9—10.7 N·m
{80—100 kgf·cm, 69.5—95.4 in·lbf}

   (4) Turn the ignition switch to ON.
   (5) Measure the voltage at PCM terminal 64.

Specification

Condition	PCM terminal 64 voltage (V)
Other than neutral position and clutch pedal released	B+
Neutral position or clutch pedal depressed	Below 1.0

   (6) If not as specified, check the related harness and neutral switch continuity.
   (7) If okay, check the clutch switch.

2. If the **SSTs** (NGS tester) are used, check in the following order.
   (1) Connect the **SSTs** (NGS tester) to the data link connector.

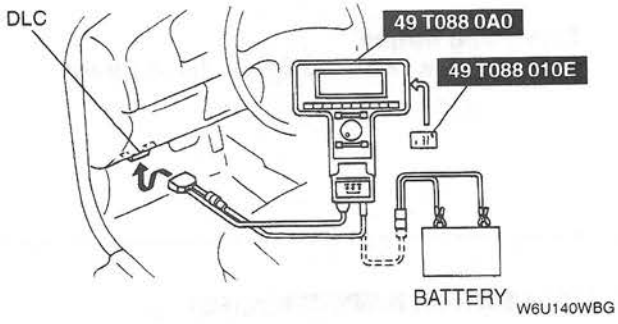

W6U140WBG

   (2) Turn the ignition switch to ON.
   (3) Select the "PID/DATA MONITOR AND RECORD" function on the NGS tester display and press TRIGGER.
   (4) Select "CPP/PNP" on the NGS tester display and press START. The NGS tester measures and shows the operation.

Specification

Condition	"CPP/PNP" operation
Other than neutral position and clutch pedal released	OFF
Neutral position or clutch pedal depressed	ON

   (5) If not as specified, check the related harness and neutral switch continuity.
   (6) If okay, check the clutch switch.

Inspection of Continuity

1. Disconnect the neutral switch connector.
2. Check continuity of the switch by using an ohmmeter.

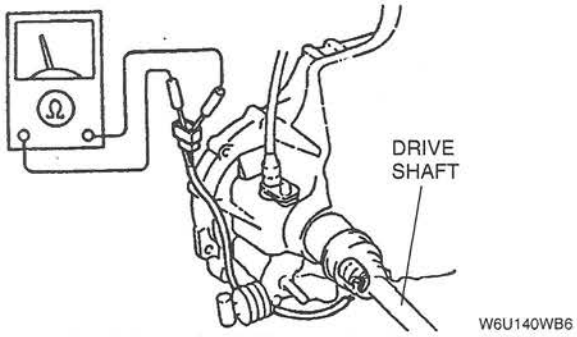

W6U140WB6

○—○ : Continuity

Condition	Terminal	
	A	B
Neutral	○	○
Other		

W6U140WB7

3. If not as specified, replace the neutral switch.

NEUTRAL SWITCH REMOVAL/INSTALLATION [FS]

W6U140W19

1. Disconnect the battery negative cable.
2. Disconnect the neutral switch connector.
3. Remove the neutral switch.
4. Install the reverse order of removal.

Tightening torque
20—29 N·m {2.0—3.0 kgf·m, 15—21 ft·lbf}

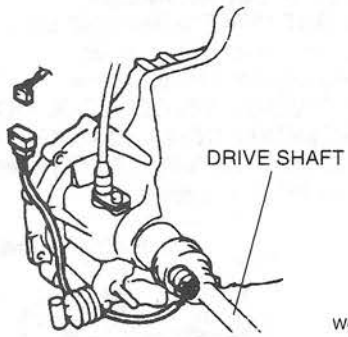

W6U140WB8

CLUTCH SWITCH INSPECTION [FS]

W6U140W20

Inspection of Output Voltage

1. If the **SST** (104 Pin Breakout Box) are used, check in the following order.
   (1) Remove the PCM. (Refer to 01–40A POWERTRAIN CONTROL MODULE (PCM) REMOVAL/INSTALLATION [FS].)
   (2) Connect the **SST** (104 Pin Breakout Box) to the PCM as shown.

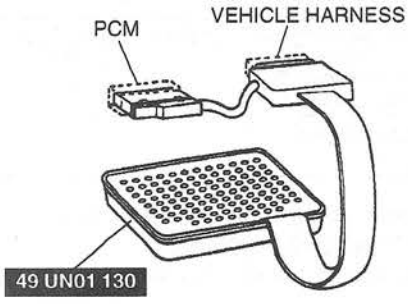

W6U140WB9

   (3) Tighten the connector bolt.

Tightening torque
7.9—10.7 N·m
{80—100 kgf·cm, 69.5—95.4 in·lbf}

   (4) Turn the ignition switch to ON.
   (5) Measure the voltage at PCM terminal 64.

Specification

Condition	PCM terminal 64 voltage (V)
Other than neutral position and clutch pedal released	B+
Neutral position or clutch pedal depressed	Below 1.0

   (6) If not as specified, check the related harness and clutch switch continuity.
   (7) If okay, check the neutral switch.
2. If the **SSTs** (NGS tester) are used, check in the following order.
   (1) Connect the **SSTs** (NGS tester) to the data link connector.

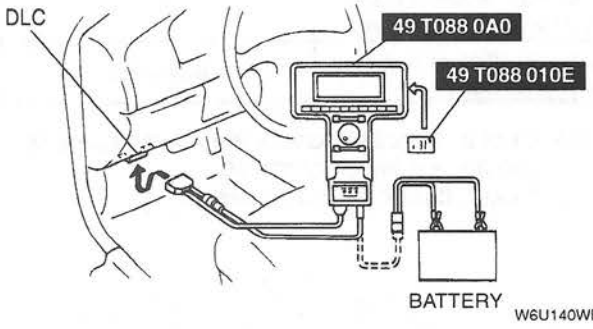

W6U140WBH

(2) Turn the ignition switch to ON.
(3) Select the "PID/DATA MONITOR AND RECORD" function on the NGS tester display and press TRIGGER.
(4) Select "CPP/PNP" on the NGS tester display and press START. The NGS tester measures and shows the operation.

Specification

Condition	"CPP/PNP" operation
Other than neutral position and clutch pedal released	OFF
Neutral position or clutch pedal depressed	ON

(5) If not as specified, check the related harness and clutch switch continuity.
(6) If okay, check the neutral switch.

Inspection of Continuity

1. Disconnect the clutch switch connector.
2. Check continuity of the clutch switch by using an ohmmeter.

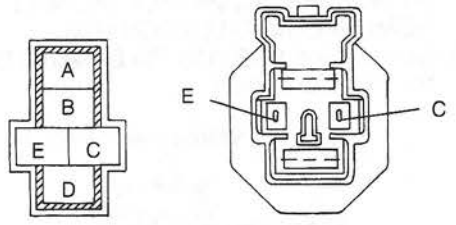

W6U140WBA

○—○ : Continuity

Condition	Terminal	
	C	E
Clutch pedal depressed	○	○
Clutch pedal released		

W6U140WBB

3. If not as specified, replace the clutch switch.

CLUTCH SWITCH REMOVAL/INSTALLATION [FS]

W6U140W21

1. Disconnect the battery negative cable.
2. Disconnect the clutch switch connector.
3. Remove the clutch switch.
4. Install the clutch switch as shown in the figure.

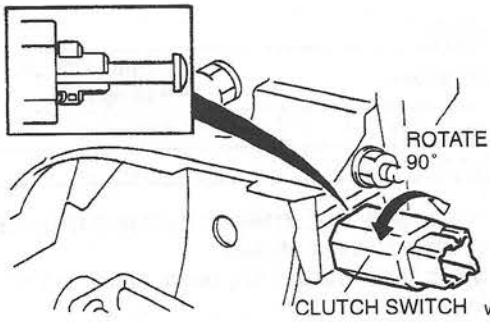

W6U140WBC

MAIN RELAY INSPECTION [FS]

W6U140W22

Inspection of Output Voltage

1. If the **SST** (104 Pin Breakout Box) are used, check in the following order.
   (1) Remove the PCM. (Refer to 01–40A POWERTRAIN CONTROL MODULE (PCM) REMOVAL/INSTALLATION [FS].)
   (2) Connect the **SST** (104 Pin Breakout Box) to the PCM as shown.

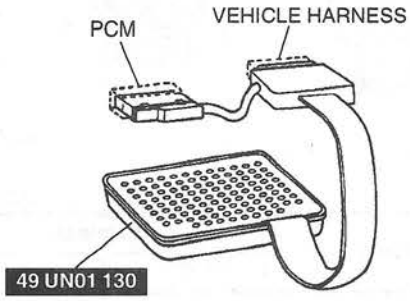

W6U140WBD

   (3) Tighten the connector bolt.

Tightening torque
7.9—10.7 N·m
{80—100 kgf·cm, 69.5—95.4 in·lbf}

   (4) Turn the ignition switch to ON.
   (5) Measure the voltage at PCM terminal 71 and 97.

Specification

Condition	PCM terminal 71 or 97 voltage (V)
Ignition switch OFF	Below 1.0
Ignition switch ON	B+

   (6) If not as specified, check the related harness and main relay continuity.
2. If the **SSTs** (NGS tester) are used, check in the following order.
   (1) Connect the **SSTs** (NGS tester) to the data link connector.

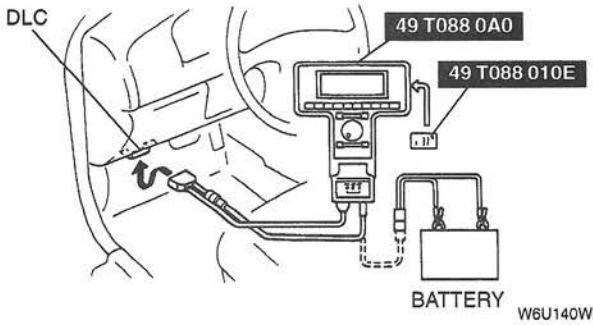

W6U140WBJ

   (2) Turn the ignition switch to ON.
   (3) Select the "PID/DATA MONITOR AND RECORD" function on the NGS tester display and press TRIGGER.
   (4) Select "VPWR" on the NGS tester display and press START. The NGS tester measures and shows the voltage.

Specification

Condition	"VPWR" voltage (V)
Ignition switch OFF	Below 1.0
Ignition switch ON	B+

   (5) If not as specified, check the related harness and main relay continuity.

Inspection of Continuity

1. Remove the main relay.
2. Apply battery positive voltage and check continuity between terminals of the relay by using an ohmmeter.

○—○ : Continuity

Step	Terminal			
	A (86)	F (85)	B (87)	E (30)
1	○	○		
2	B+	GND	○	○

W6U140WBF

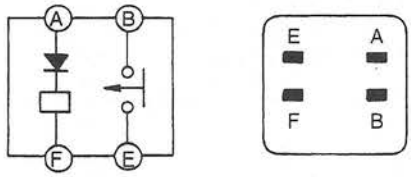

W6U140WBE

3. If not as specified, replace the main relay.

01–40B CONTROL SYSTEM [KL]

CONTROL SYSTEM COMPONENT LOCATION [KL] 01–40B–2
POWERTRAIN CONTROL MODULE (PCM) REMOVAL/INSTALLATION [KL] 01–40B–3
PCM Removal Note 01–40B–3
POWERTRAIN CONTROL MODULE (PCM) INSPECTION [KL] 01–40B–3
Using the SST (104 Pin Breakout Box) . 01–40B–3
Using the SST (NGS Tester) 01–40B–10
MASS AIR FLOW SENSOR INSPECTION [KL] 01–40B–16
Using the SST (104 Pin Breakout Box) . 01–40B–16
Using the SST (NGS Tester) 01–40B–16
CAMSHAFT POSITION SENSOR INSPECTION [KL] 01–40B–17
CAMSHAFT POSITION SENSOR REMOVAL/INSTALLATION [KL] 01–40B–17
KNOCK SENSOR INSPECTION [KL] .. 01–40B–18
KNOCK SENSOR REPLACEMENT [KL] 01–40B–18
Knock Sensor Removal/Installation Note 01–40B–19
CRANKSHAFT POSITION SENSOR INSPECTION [KL] 01–40B–19
Inspection of Resistance 01–40B–19
Inspection of Air Gap 01–40B–19
CRANKSHAFT POSITION SENSOR REPLACEMENT [KL] 01–40B–19
THROTTLE POSITION SENSOR INSPECTION [KL] 01–40B–20
Inspection of Resistance 01–40B–20
Inspection of Output Voltage 01–40B–20
THROTTLE POSITION SENSOR ADJUSTMENT [KL] 01–40B–21
ENGINE COOLANT TEMPERATURE SENSOR INSPECTION [KL] 01–40B–22
Inspection of Output Voltage 01–40B–22
Inspection of Resistance 01–40B–23
INTAKE AIR TEMPERATURE SENSOR INSPECTION [KL] 01–40B–23
Inspection of Output Voltage 01–40B–23
Inspection of Resistance 01–40B–24
HEATED OXYGEN SENSOR INSPECTION [KL] 01–40B–24
Heated Oxygen Sensor Inspection ... 01–40B–24
Heated Oxygen Sensor Heater Inspection 01–40B–25
EGR BOOST SENSOR INSPECTION [KL] 01–40B–25
FUEL TANK PRESSURE SENSOR INSPECTION [KL] 01–40B–26
Using the SST (104 Pin Breakout Box) . 01–40B–26
Using the SSTs (NGS Tester) 01–40B–27
POWER STEERING PRESSURE SWITCH INSPECTION [KL] 01–40B–28
Inspection of Output Voltage 01–40B–28
Inspection of Continuity 01–40B–29
NEUTRAL SWITCH INSPECTION [KL] . 01–40B–29
Inspection of Output Voltage 01–40B–29
Inspection of Continuity 01–40B–30
NEUTRAL SWITCH REMOVAL/INSTALLATION [KL] 01–40B–30
CLUTCH SWITCH INSPECTION [KL] .. 01–40B–30
Inspection of Output Voltage 01–40B–30
Inspection of Continuity 01–40B–31
CLUTCH SWITCH REMOVAL/INSTALLATION [KL] 01–40B–31
MAIN RELAY INSPECTION [KL] 01–40B–32
Inspection of Output Voltage 01–40B–32
Inspection of Continuity 01–40B–32

CONTROL SYSTEM COMPONENT LOCATION [KL]

W6U140W0A

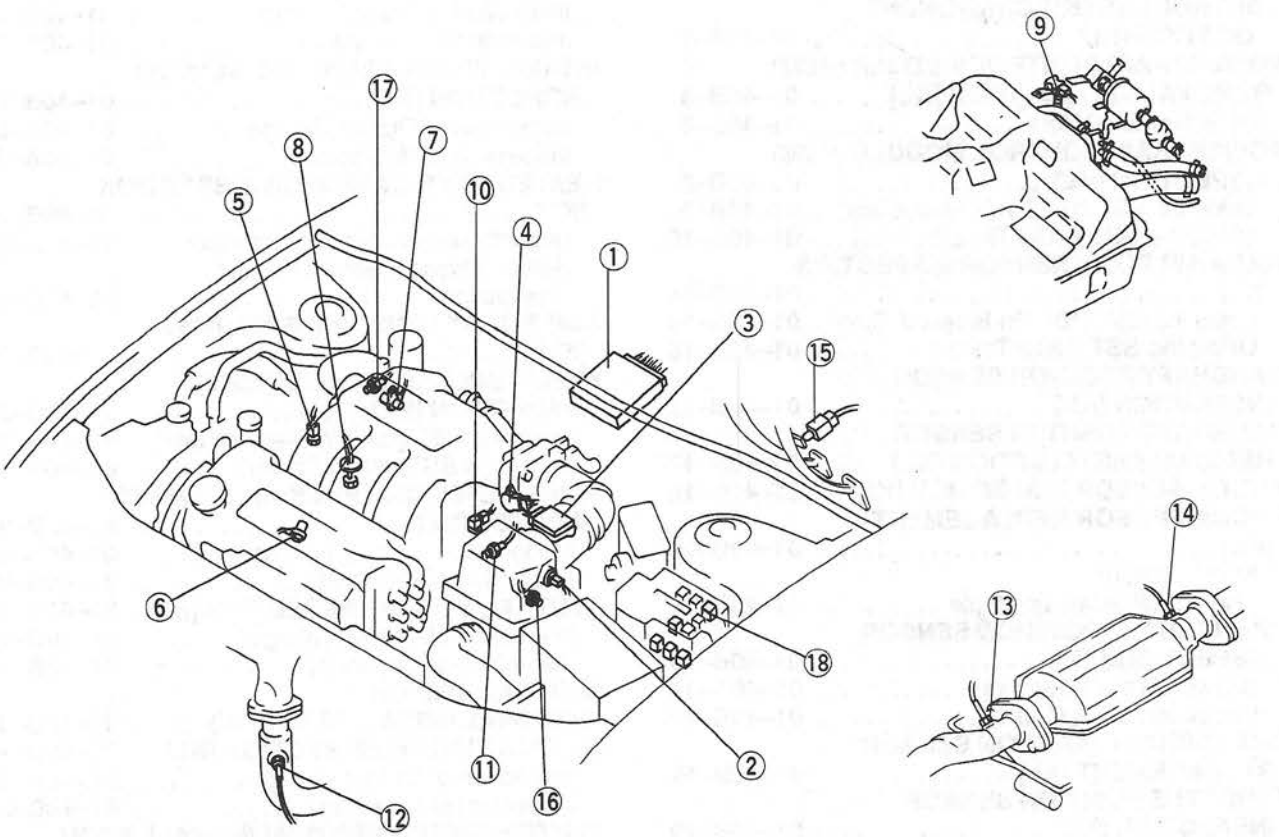

W6U140WM0

1	PCM
2	Intake temperature sensor
3	Mass air flow sensor
4	Throttle position sensor
5	Engine coolant temperature sensor
6	Crankshaft position sensor
7	Camshaft position sensor
8	Knock sensor
9	Fuel tank pressure sensor

10	EGR boost sensor
11	Heated oxygen sensor (Front RH)
12	Heated oxygen sensor (Front LH)
13	Heated oxygen sensor (Middle)
14	Heated oxygen sensor (Rear)
15	Clutch switch
16	Neutral switch
17	Power steering pressure switch
18	Main relay

POWERTRAIN CONTROL MODULE (PCM) REMOVAL/INSTALLATION [KL]

W6U140W0B

Caution
- **PCM is sensitive to static electrical charges. If exposed to these charges, damage may result. If service of PCM is required, use the following safeguards to avoid damage to components.**
  1. **Leave the PCM in their original packaging until ready to install into vehicles.**
  2. **Avoid touching PCM connector pins.**
  3. **Avoid laying modules on nonconductive surfaces.**

1. Disconnect the negative battery cable.
2. Remove the rear console. (Refer to 09–17 REAR CONSOLE REMOVAL/INSTALLATION.)
3. Remove in the order indicated in the table.
4. Install in the reverse order of removal.

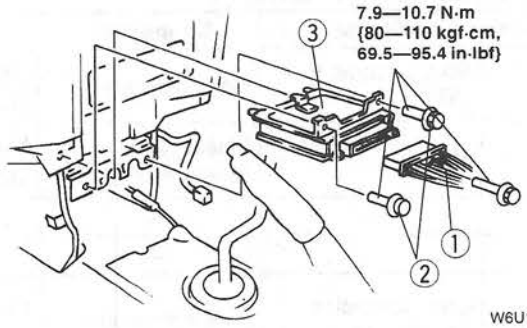

W6U140WM1

1	PCM connector
2	Bolt
3	PCM ☞ Removal Note

PCM Removal Note
- The PCM stores information on vehicle operating conditions including information to compensate for component tolerances. When an emission related component is replaced, Keep Alive Memory (KAM) in the PCM should be cleared by disconnecting the battery terminal to erase the information stored on the original component.

POWERTRAIN CONTROL MODULE (PCM) INSPECTION [KL]

W6U140W0C

Caution
- **The PCM terminal voltages vary with change in measuring conditions and vehicle conditions. Always carry out a total inspection of the input systems, output systems, and PCM to determine the cause of trouble. Otherwise, some incorrect diagnosis would be made.**

Using the SST (104 Pin Breakout Box)
1. Disconnect the negative battery cable.
2. Disconnect the PCM connector.
3. Connect the **SST** (104 Pin Breakout Box) to the PCM as shown.

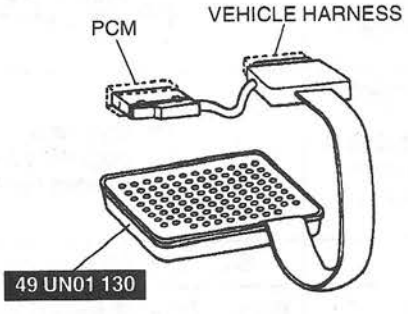

W6U140WM2

4. Tighten the connector bolt.

   Tightening torque
   7.9—10.7 N·m
   {80—110 kgf·m, 69.5—95.4 in·lbf}

5. Connect the negative battery cable.
6. Measure the voltage at each terminal.
7. If any incorrect voltage is detected, check related systems, wiring harnesses and connectors referring to the possible malfunction in the terminal voltage list.

Terminal voltage (Reference)

Terminal	Signal	Connection	Test condition		Voltage (V)	Possible malfunction
1	Shift solenoid B (ATX)	Solenoid body	ON		B+	• Solenoid body • Related harness
			OFF		Below 1.0	
2	MIL	Malfunction indicator lamp	Malfunction indicator lamp OFF		B+	• MIL • Related harness
			Malfunction indicator lamp ON		Below 1.0	
3	—	—	—		—	—
4	—	—	—		—	—
5	Communication (Immobilizer)	Immobilizer unit	Check the signal by using an oscilloscope		—	• PCM* • Immobilizer unit • Related harness
6	Transaxle range position (D range) (ATX)	Transaxle range switch (D range)	Ignition switch ON	D range	B+	• Transaxle range switch • Related harness
				Other	Below 1.0	
7	Transaxle range position (1 range) (ATX)	Transaxle range switch (1 range)	Ignition switch ON	1 range	B+	• Transaxle range switch • Related harness
				Other	Below 1.0	
8	Cylinder identification (–)	Camshaft position sensor	Ignition switch ON		Below 1.0	• Camshaft position sensor • Related harness
			Idle		Below 1.0	
9	Transaxle range position (2 range) (ATX)	Transaxle range switch (2 range)	Ignition switch ON	2 range	B+	• Transaxle range switch • Related harness
				Other	Below 1.0	
10	Blower	Fan switch	Ignition switch ON	Fan switch OFF or at 1st or 2nd	Approx. 10	• Fan switch • Related harness
				Fan switch ON at 3rd or higher	Below 1.0	
11	Torque reduction (request)	Instrument cluster, ABS/TCS CM	Ignition switch ON		Approx. 10	• ABS/TCS control module • Related harness
			Idle		B+	
12	—	—	—		—	—
13	EP ROM flashing	Data link connector	Ignition switch ON		Approx. 0.6	• PCM • Related harness
			Idle		Approx. 0.6	
14	DRL	DRL unit	Daytime running light ON		Below 1.0	• DRL unit • Related harness
			Daytime running light OFF		Approx. 8.0	
15	Diagnostic trouble code output	Data link connector terminal BUS–	Carry out inspection according to diagnostic trouble code Diagnostic trouble code output is a part of serial communication Judgment by terminal voltage is not possible		—	• On-board diagnostic system • Related harness
16	Diagnostic trouble code output	Data link connector terminal BUS+	Carry out inspection according to diagnostic trouble code Diagnostic trouble code output is a part of serial communication Judgment by terminal voltage is not possible		—	• On-board diagnostic system • Related harness
17	Condenser fan control	Condenser fan relay	Condenser fan stops		B+	• Condenser fan relay • Related harness
			Condenser fan operation		Below 1.0	
18	CDCV control	CDCV	Ignition switch ON		B+	• CDCV • Related harness
			Diagnosis executed		Below 1.0	
19	Pressure regulator control	PRC solenoid valve	Idle (Hot condition)		Below 1.0	• PRC solenoid valve • Related harness
			Other		B+	

Terminal	Signal	Connection	Test condition		Voltage (V)	Possible malfunction
20	Idle air control	IAC valve	Ignition switch ON		B+	• IAC valve • Related harness
			Idle	After warm up (No load)	B+	
21	NE+	Crankshaft position sensor	Ignition switch ON		Approx. 1.5	• Crankshaft position sensor • Related harness
			Idle		Approx. 1.5	
22	NE–	Crankshaft position sensor	Ignition switch ON		Approx. 1.5	• Crankshaft position sensor • Related harness
			Idle		Approx. 1.5	
23	Ground (Input/turbine speed sensor) (ATX)	Input/turbine speed sensor	Constant		Below 1.0	• Input/turbine speed sensor • Related harness
24	Ground	Ground	Constant		Below 1.0	• Related harness
25	—	—	—		—	—
26	Ignition	Ignition coil (#1, #4)	Ignition switch ON		B+	• Ignition coil • Related harness
			Idle		B+	
27	Shift solenoid A (ATX)	Shift solenoid A	Solenoid valve OFF		Below 1.0	• Shift solenoid A • Related harness
			Solenoid valve ON		B+	
28	3–2 timing solenoid valve (ATX)	3–2 timing solenoid valve	Solenoid valve OFF		Below 1.0	• 3–2 timing solenoid valve • Related harness
			Solenoid valve ON		B+	
29	O/D OFF switch (ATX)	O/D OFF switch	O/D OFF switch released		B+	• O/D OFF switch • Related harness
			O/D OFF switch depressed		Below 1.0	
30	—	—	—		—	—
31	Power steering pressure	Power steering pressure switch	Ignition switch ON		B+	• Power steering pressure switch • Related harness
			Idle	Steering wheel in straight ahead position	B+	
				Steering wheel is tuned fully left or right	Below 1.0	
32	Transaxle range position (R position) (ATX)	Transaxle range switch (R switch)	Ignition switch ON	R position	Approx. 12	• Transaxle range switch • Related harness
				Other	Below 1.0	
33	Ground	Vehicle speedometer sensor (–)	Constant		Below 1.0	• Vehicle speedometer sensor • Related harness
34	Barometric pressure/EGR boost	EGR boost sensor	Ignition switch ON		Approx. 4.0	• EGR boost sensor • Related harness
			Idle		Approx. 4.0	
35	Heated oxygen sensor (Middle)	Heated oxygen sensor (Middle)	Ignition switch ON		Below 1.0	• Heated oxygen sensor (Middle) • Related harness
			Idle	Engine cold	Below 0.5	
				After warm up	0.1—0.9	
			Acceleration		0.5—1.0	
			Deceleration		0—0.5	
36	Ground	Mass air flow sensor	Constant		Below 1.0	• Mass air flow sensor • Related harness

Terminal	Signal	Connection	Test condition		Voltage (V)	Possible malfunction
37	Transaxle fluid temperature (ATX)	Transaxle fluid temperature sensor	Verify that voltage decreases according to ATF temperature rise For reference, if the ATF is 20 °C {68 °F} the voltage should be 3.5 V If the ATF is 130 °C {260 °F} the voltage should be 0.6 V		Approx. 0.6—4.8	• Transaxle fluid temperature sensor • Related harness
38	Engine coolant temperature	Engine coolant temperature sensor	Ignition switch ON	Engine coolant temperature 20 °C {68 °F}	Approx. 3.1	• Engine coolant temperature sensor • Related harness
				After warm up	Below 1.0	
39	Intake air temperature	Intake air temperature sensor	Ignition switch ON	Intake air temperature 20 °C {68 °F}	Approx. 3.1	• Intake air temperature sensor • Related harness
40	—	—	—		—	—
41	A/C	A/C switch	Idle	A/C switch ON and fan switch ON	Below 1.0	• A/C switch • Refrigerant pressure switch • Related harness
				A/C switch OFF	B+	
42	VRIS control	VRIS solenoid valve No.1	Ignition switch ON		B+	• VRIS solenoid valve No.1 • Related harness
			Idle (Engine speed above 3,500 rpm)		Below 1.0	
43	—	—	—		—	—
44	VRIS control	VRIS solenoid valve No.2	Ignition switch ON		B+	• VRIS solenoid valve No.2 • Related harness
			Idle (Engine speed above 4,500 rpm)		Below 1.0	
45	Cooling fan control	Cooling fan relay	Cooling fan not operating		B+	• Cooling fan relay • Related harness
			Cooling fan operating		Below 1.0	
46	EGR control	EGR valve (Coil #3)	Ignition switch ON		B+	• EGR valve • Related harness
			Idle		B+	
47	—	—	—		—	—
48	Engine speed	Instrument cluster, ABS/TCS CM	Ignition switch ON		Approx. 10	• Instrument cluster • Related harness
			Idle		Approx. 6.5	
49	Headlight	Headlight switch	Headlight switch OFF		Below 1.0	• Headlight switch • Related harness
			Headlight switch ON		B+	
50	—	—	—		—	—
51	Ground	Ground	Constant		Below 1.0	• Related harness
52	Ignition	Ignition coil (#2, #5)	Ignition switch ON		B+	• Ignition coil • Related harness
			Idle		B+	
53	Shift solenoid C (ATX)	Shift solenoid C	Solenoid valve OFF		B+	• Shift solenoid C • Related harness
			Solenoid valve ON		Below 1.0	
54	Torque converter clutch control (ATX)	Solenoid body	Torque converter clutch not operation		Below 1.0	• Solenoid body • Related harness
			Torque converter clutch operation		B+	
55	Back-up Power supply	Battery	Constant		B+	• Battery • Related harness
56	EGR control	EGR valve (Coil #4)	Ignition switch ON		Below 1.0	• EGR valve • Related harness
			Idle		Below 1.0	

Terminal	Signal	Connection	Test condition		Voltage (V)	Possible malfunction
57	Knocking	Knock sensor	Ignition switch ON		Approx. 3.5	• Knock sensor • Related harness
			Idle		Approx. 3.5	
58	Vehicle speed	Vehicle speedometer sensor (+)	Idle (AC range)		Approx. 0.1	• Vehicle speedometer sensor • Related harness
			48 km/h {30 mph} (AC range)		Approx. 8.0	
			88 km/h {55 mph} (AC range)		Approx. 12.7	
59	—	—	—		—	—
60	Heated oxygen sensor	Heated oxygen sensor (Front RH)	Ignition switch ON		Below 1.0	• Heated oxygen sensor (Front RH) • Related harness
			Idle	Engine cold	Below 0.5	
				After warm up	0.1—0.9	
			Acceleration	After warm up	0.5—1.0	
			Deceleration	After warm up	0—0.5	
61	Heated oxygen sensor	Heated oxygen sensor (Rear)	Ignition switch ON		Below 1.0	• Heated oxygen sensor (Rear) • Related harness
			Idle	Engine cold	Approx. 0	
				After warm up	0.1—0.9	
62	Fuel tank pressure	Fuel tank pressure sensor	Ignition switch ON	Fuel tank pressure 0 kPa {0 mmHg, 0 inHg} (Barometric pressure)	Approx. 2.5	• Fuel tank pressure sensor • Related harness
63	Fuel level	Fuel gauge sender unit	Full fuel		Approx. 6	• Fuel level sender unit • Related harness
			Low fuel		Approx. 0	
64	Load/No load distinction	Neutral/Clutch switch (MTX), Transaxle range switch (ATX)	**MTX** Other than neutral position and clutch pedal released		B+	• Neutral switch • Clutch switch • Transaxle range switch • Related harness
			ATX Other than P and N positions			
			MTX Neutral position or clutch pedal depressed		Below 1.0	
			ATX P or N position			
65	—	—	—		—	—
66	Rear window defroster	Rear window defroster switch	Ignition switch ON	Rear window defroster switch OFF	B+	• Rear window defroster switch • Related harness
				Rear window defroster switch ON	Below 1.0	
67	Purge control	Purge solenoid valve	Ignition switch ON		B+	• Purge solenoid valve • Related harness
			Idle		B+	
68	EGR control	EGR valve (Coil #1)	Ignition switch ON		B+	• EGR valve • Related harness
			Idle			
69	A/C control	A/C relay	Idle	A/C switch OFF	B+	• A/C relay • Related harness
				A/C switch ON and fan switch ON	Below 1.0	

Terminal	Signal	Connection	Test condition		Voltage (V)	Possible malfunction
70	Fuel pump control (Immobilizer)	Fuel pump relay	Ignition switch ON		B+	• Fuel pump relay • Related harness
			Cranking		Below 1.0	
			Idle		Below 1.0	
71	Power supply	Main relay	Ignition switch OFF		Below 1.0	• Main relay • Related harness
			Ignition switch ON		B+	
72	EGR control	EGR valve (Coil #2)	Ignition switch ON		B+	• EGR valve • Related harness
			Idle		Below 1.0	
73	Fuel injector control #5	Fuel injector No.5	Ignition switch ON		B+	• Fuel injector No.5 • Related harness
			Idle		B+	
74	Fuel injector control #3	Fuel injector No.3	Ignition switch ON		B+	• Fuel injector No.3 • Related harness
			Idle		B+	
75	Fuel injector control #1	Fuel injector No.1	Ignition switch ON		B+	• Fuel injector No.1 • Related harness
			Idle		B+	
76	Ground	Ground	Constant		Below 1.0	• Related harness
77	Ground	Ground	Constant		Below 1.0	• Related harness
78	Ignition	Ignition coil (#3, #6)	Ignition switch ON		B+	• Ignition coil • Related harness
			Idle		B+	
79	O/D OFF indicator light (ATX)	O/D OFF indicator light	Except O/D OFF mode		B+	• O/D OFF indicator light • Related harness
			O/D OFF mode		Below 1.0	
80	Fuel pump control (Without immobilizer)	Fuel pump relay	Ignition switch ON		B+	• Fuel pump relay • Related harness
			Cranking		Below 1.0	
			Idle		Below 1.0	
81	Pressure control solenoid (ATX)	Pressure control solenoid	Idle	Closed throttle position	Approx. 7	• Pressure control solenoid • Related harness
				Wide open throttle	Approx. 1.6	
82	Torque reduction (Engine condition)	ABS/TCS CM	Ignition switch ON		Below 1.0	• ABS/TCS control module • Related harness
			Idle		Approx. 4.0	
83	Idle air control	IAC valve	Ignition switch ON		B+	• IAC valve • Related harness
			Idle	After warm up (No load)	Approx. 11	
84	Input/turbine speed (ATX)	Input/turbine speed sensor	Ignition switch ON (AC range)		Below 1.0	• Input/turbine speed sensor • Related harness
			Engine running at P position (AC range)		Below 1.0	
85	Cylinder identification (+)	Cylinder identification sensor	Ignition switch ON		Below 1.0	• Cylinder identification sensor • Related harness
			Idle		Below 1.0	
86	—	—	—		—	—
87	Heated oxygen sensor (Front LH)	Heated oxygen sensor (Front LH)	Ignition switch ON		Below 1.0	• Heated oxygen sensor (Front LH) • Related harness
			Idle	Engine cold	Below 0.5	
				After warm up	0.1—0.9	
			Acceleration		0.5—1.0	
			Deceleration		0—0.5	
88	Mass air flow	Mass air flow sensor	Ignition switch ON		Below 1.0	• Mass air flow sensor • Related harness
			Idle		1.0—2.0	
89	Throttle position	Throttle position sensor	Ignition switch ON	Closed throttle position	0.3—1.0	• Throttle position sensor • Related harness
				Wide open throttle	2.8—4.5	

Terminal	Signal	Connection	Test condition	Voltage (V)	Possible malfunction
90	Constant voltage (Vref)	EGR boost sensor, Fuel tank pressure sensor, Throttle position sensor	Ignition switch ON	Approx. 5.0	• Related harness
91	Ground	Engine coolant temperature sensor, Intake air temperature sensor, EGR boost sensor, Fuel tank pressure sensor, Throttle position sensor, Neutral/clutch switch, Heated oxygen sensor (Front RH, LH, Middle, Rear) and Input/turbine speed sensor	Constant	Below 1.0	• Related harness
92	Brake	Brake switch	Brake pedal released	Below 1.0	• Brake switch • Related harness
			Brake pedal depressed	B+	
93	Heated oxygen sensor heater (Front RH)	Heated oxygen sensor (Front RH)	Ignition switch ON	B+	• Heated oxygen sensor (Front RH) • Related harness
			Idle	Below 1.0	
94	Heated oxygen sensor heater (Front LH)	Heated oxygen sensor (Front LH)	Ignition switch ON	B+	• Heated oxygen sensor (Front LH) • Related harness
			Idle	Below 1.0	
95	Heated oxygen sensor heater (Middle)	Heated oxygen sensor (Middle)	Ignition switch ON	B+	• Heated oxygen sensor (Middle) • Related harness
			Idle	Below 1.0	
96	Heated oxygen sensor heater (Rear)	Heated oxygen sensor (Rear)	Ignition switch ON	B+	• Heated oxygen sensor (Rear) • Related harness
			Idle	Below 1.0	
97	Power supply 2	Main relay	Ignition switch OFF	Below 1.0	• Main relay • Related harness
			Ignition switch ON	B+	
98	EGR boost sensor switching control	EGR boost sensor solenoid valve	Ignition switch ON	B+	• EGR boost sensor solenoid valve • Related harness
			Idle	B+	
99	Fuel injection control #6	Fuel injector No.6	Ignition switch ON	B+	• Fuel injector No 6 • Related harness
			Idle	B+	
100	Fuel injection control #4	Fuel injector No.4	Ignition switch ON	B+	• Fuel injector No 4 • Related harness
			Idle	B+	
101	Fuel injection control #2	Fuel injector No.2	Ignition switch ON	B+	• Fuel injector No 2 • Related harness
			Idle	B+	
102	—	—	—	—	—
103	Ground	Ground	Constant	Below 1.0	• Related harness
104	—	—	—	—	—

* : If the immobilizer control module functions normally, replace the PCM.

Using the SST (NGS Tester)

1. In the passenger compartment, connect the **SSTs** (NGS tester) to the data link connector.

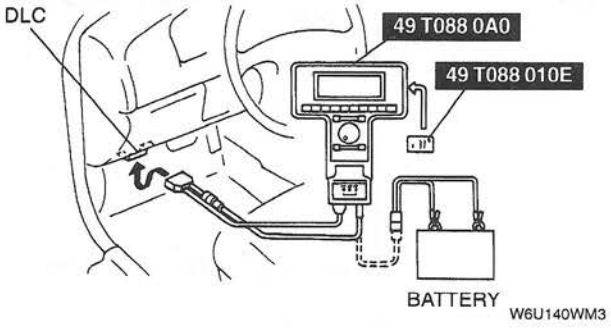

2. Referring to the NGS tester instruction manual, select the "PID/DATA MONITOR AND RECORD" and press TRIGGER.

Note

- The "PID/DATA MONITOR AND RECORD" function is to monitor the calculation value of input/output signals in the PCM. Deviation in the value does not always indicate malfunction in the related input/output devices.
- For inspection of the input/output signals other than in the link monitor table, check voltage at the applicable PCM terminal by using the **SST** (104 Pin Breakout Box).

3. Press CLEAR to clear previously selected items. (A list of item descriptions appears on the screen).
4. Select items necessary and press START.
5. Carry out inspection referring to PID/DATA MONITOR table.
6. If normal output signal cannot be detected when all input signals are normal, replace the PCM. (Refer to 01–40B POWERTRAIN CONTROL MODULE (PCM) REMOVAL/INSTALLATION [KL].)

PID/DATA MONITOR item table

Note

- The following PIDs may display on the NGS tester, but these are not used for inspection, because of these device are not applied for this model.

• ACP	• EGRVF	• HTR22A	• PTO
• AIRA	• EGRVR	• HTRX1	• TAR_LRN
• AIRF	• EVAPCP	• HTRX2	• TATCF
• AIRM	• EVAPVMA	• IMRC	• TCCA
• ARCF	• FANM	• IMRCF	• TCCMACT
• CCS	• FFFM	• IMTVF	• TRAC
• DPFEGR	• FP M	• INJ7F	• TRANRAT
• EGRC	• FTP B	• INJ8F	• TRD
• EGRCF	• HFCA	• KS V	• WACA
• EGRFO	• HTR11A	• LFCA	• WACF
• EGRFS	• HTR12A	• LFPF	• 4×4L
• EGRV	• HTR21A	• OCTADJ	

Monitor item	Full name	Unit/Condition	Application	
			MTX	ATX
ACCS	A/C switch	ON/OFF	×	×
ACP V	Refrigerant pressure switch signal voltage	V	×	×
BARO	Barometric pressure	Hz	×	×
BLWMTR	Fan switch	ON/OFF	×	×
BOO	Brake switch	ON/OFF		×
CPP/PNP	Neutral/Clutch switch	ON/OFF	×	
DRIVECT	Total number of OBD II drive mode completed	—	×	×
DRLMP	Daytime running lights (for CANADA)	ON/OFF	×	×
DTC CNT	Total number of diagnostic trouble codes (DTC) stored in PCM (Include pending codes)	—	×	×
ECT	Engine coolant temperature	°C/°F	×	×
ECT V	Engine coolant temperature sensor signal voltage	V	×	×
EGR	Barometric pressure or EGR pressure	PSI	×	×
EGRBARO	EGR boost solenoid valve	ON/OFF	×	×
EGRCD1	EGR valve (Coil #1)	ON/OFF	×	×
EGRCD2	EGR valve (Coil #2)	ON/OFF	×	×

Monitor item	Full name	Unit/Condition	Application	
			MTX	ATX
EGRCD3	EGR valve (Coil #3)	ON/OFF	×	×
EGRCD4	EGR valve (Coil #4)	ON/OFF	×	×
EPC	Line pressure	PSI		×
EVAPCPF	Purge control system output circuit failed	YES/NO	×	×
EVAPCV	CDCV operation condition	%	×	×
EVAPPDC	Purge solenoid valve duty value	%	×	×
EVAPCVF	CDCV failed detected	YES/NO	×	×
FLI	Fuel level	%	×	×
FLI V	Fuel gage sender unit signal voltage	V	×	×
FP	Fuel pump operation condition	%	×	×
FPA	Fuel pump relay	ON/OFF	×	×
FPRC	PRC solenoid valve	ON/OFF	×	×
FTP V	Fuel tank pressure sensor signal voltage	V	×	×
FUELPW1	Fuel injector duration time (RH)	ms	×	×
FUELPW2	Fuel injector duration time (LH)	ms	×	×
GEAR	Selector lever position	—		×
HDLMP	Headlight switch	ON/OFF	×	×
HFC	Condenser fan	ON/OFF	×	×
HFCF	Condenser fan circuit failed	YES/NO	×	×
HTR11	Heated oxygen sensor heater (Front RH)	ON/OFF	×	×
HTR11F	Heated oxygen sensor heater (Front RH) failed	YES/NO	×	×
HTR12	Heated oxygen sensor heater (Middle)	ON/OFF	×	×
HTR12F	Heated oxygen sensor heater (Middle) failed	YES/NO	×	×
HTR21	Heated oxygen sensor heater (Front LH)	ON/OFF	×	×
HTR21F	Heated oxygen sensor heater (Front LH) failed	YES/NO	×	×
HTR22	Heated oxygen sensor heater (Rear)	ON/OFF	×	×
HTR22F	Heated oxygen sensor heater (Rear) failed	YES/NO	×	×
IAC	IAC valve duty value	%	×	×
IACF	IAC system failed	YES/NO	×	×
IAT	Intake air temperature	°C/°F	×	×
IAT V	Intake air temperature sensor signal voltage	V	×	×
INJ1F	Fuel injector #1 circuit failed	YES/NO	×	×
INJ2F	Fuel injector #2 circuit failed	YES/NO	×	×
INJ3F	Fuel injector #3 circuit failed	YES/NO	×	×
INJ4F	Fuel injector #4 circuit failed	YES/NO	×	×
INJ5F	Fuel injector #5 circuit failed	YES/NO	×	×
INJ6F	Fuel injector #6 circuit failed	YES/NO	×	×
LFC	Cooling fan	ON/OFF	×	×
LFCF	Cooling fan circuit failed	YES/NO	×	×
LOAD	Calculated engine load value	%	×	×
LONGFT1	Long fuel trim (RH)	%	×	×
LONGFT2	Long fuel trim (LH)	%	×	×
LOOP	Feedback control condition	OPEN/CLOSED	×	×
MAF	Mass air flow amount	gm/s	×	×
MIL	MIL	ON/OFF	×	×
MILF	MIL circuit failed	YES/NO	×	×
MISF	Misfiring	ON/OFF	×	×
O2S11	Heated oxygen sensor (Front RH) signal voltage	V	×	×

Monitor item	Full name	Unit/Condition	Application	
			MTX	ATX
O2S12	Heated oxygen sensor (Middle) signal voltage	V	×	×
O2S21	Heated oxygen sensor (Front LH) signal voltage	V	×	×
O2S22	Heated oxygen sensor (Rear) signal voltage	V	×	×
PIP	IG coil signal	V	×	×
PSP	Power steering pressure switch	ON/OFF	×	×
PSP V	Power steering pressure switch signal voltage	V	×	×
RDEF	Rear window defroster switch	ON/OFF	×	×
RPM	Engine speed	rpm	×	×
SHORTFT1	Short fuel trim (RH)	%	×	×
SHORTFT2	Short fuel trim (LH)	%	×	×
SPRKADV	Ignition timing	BTDC	×	×
SS1	Shift solenoid A	ON/OFF		×
SS2	Shift solenoid B	ON/OFF		×
SS3	Shift solenoid C	ON/OFF		×
TCC	Torque converter clutch solenoid valve duty value	%		×
TCS	O/D OFF switch	ON/OFF		×
TFT	Transaxle fluid temperature	°C/°F		×
TFT V	Transaxle fluid temperature sensor signal voltage	V		×
TP V	Throttle position sensor signal voltage	V	×	×
TP MODE	Throttle position	C/T, P/T, WOT	×	×
TR	Transaxle range	—		×
TR V	Transaxle range switch signal voltage	V		×
TRIP	OBD II trip cycle status	—	×	×
TRIPCNT	Total number of OBD II trip cycle completed	—	×	×
TSS	Turbine shaft speed	rpm		×
TSS/ISS	Turbine/Input shaft speed	rpm		×
VPWR	Battery voltage	V	×	×
VSS	Vehicle speed	km/h, mph	×	×

PID/DATA MONITOR table (Reference)

Monitor item	Reference Value/Condition
ACCS	A/C switch ON: ON Others: OFF
ACP V	A/C ON condition: Approx. 12 V Refrigerant pressure switch OFF (A/C ON condition): Approx. 0 V
BARO	IG switch ON: Approx. 150 Hz
BLWMTR	Fan switch ON at 3rd or higher: ON Others: OFF
BOO	Brake pedal depressed: ON Others: OFF
CPP/PNP	Shift lever in neutral position/Clutch pedal depressed: ON Others: OFF
DRIVECT	Indicates the number of OBD II drive mode completed
DRLMP	Daytime running lights ON: ON (For CANADA) Others: OFF
DTC CNT	Indicates the total number of diagnostic trouble codes (DTC) stored in PCM (Include pending codes)
ECT	After warm up: Approx. 85 °C {185 °F}
ECT V	Engine coolant temperature 20 °C {68 °F}: Approx. 3.1 V After warm up: Below 1.0 V
EGR	Indicates atmospheric pressure (Except OBD II EGR monitor testing)
EGRBARO	During OBD II EGR monitor testing: OFF Others: ON
EGRCD1	IG switch ON: OFF Idle: OFF
EGRCD2	IG switch ON: OFF Idle: ON
EGRCD3	IG switch ON: OFF Idle: OFF
EGRCD4	IG switch ON: OFF Idle: ON
EPC	Idle (After warm up): Approx. 55 kPa {8.0 psi}
EVAPCPF	Purge control system output circuit failed: YES Others: NO
EVAPCV	Idle: 0%
EVAPCVF	CDCV failed: YES Others: NO
EVAPPDC	Idle: 0%
FLI	Full fuel: Approx. 90%
FLI V	Full fuel: Approx. 6 V
FP	IG switch ON: 0% Cranking or idling: 100%
FPA	IG switch ON: OFF Cranking or idling: ON
FPRC	IG switch ON: OFF Idle (After warm up): OFF Idle (Hot condition): ON
FTP V	Fuel tank pressure 0 kPa {0 mmHg, 0 inHg}: Approx. 2.5 V
FUELPW1	Idle (After warm up): 2.0—4.0 msec
FUELPW2	Idle (After warm up): 2.0—4.0 msec
GEAR	Selector lever in 2nd range: 2 Others: PRND
HDLMP	Headlights ON: ON Others: OFF
HFC	Condenser fan operating: ON Others: OFF

Monitor item	Reference Value/Condition
HFCF	Condenser fan circuit failed: YES Others: NO
HTR11	Heated oxygen sensor heater (Front RH) ON: ON Others: OFF
HTR11F	Heated oxygen sensor heater (Front RH) failed: YES Others: NO
HTR12	Heated oxygen sensor heater (Middle) ON: ON Others: OFF
HTR12F	Heated oxygen sensor heater (Middle) failed: YES Others: NO
HTR21	Heated oxygen sensor heater (Front LH) ON: ON Others: OFF
HTR21F	Heated oxygen sensor heater (Front LH) failed: YES Others: NO
HTR22	Heated oxygen sensor heater (Rear) ON: ON Others: OFF
HTR22F	Heated oxygen sensor heater (Rear) failed: YES Others: NO
IAC	IG switch ON: 0% Idle: Approx. 30%
IACF	IAC system failed: YES Others: NO
IAT	Indicates intake air temperature
IAT V	Intake air temperature 20 °C {68 °F}: Approx. 3.1 V
INJ1F	Fuel injector #1 circuit failed: YES Others: NO
INJ2F	Fuel injector #2 circuit failed: YES Others: NO
INJ3F	Fuel injector #3 circuit failed: YES Others: NO
INJ4F	Fuel injector #4 circuit failed: YES Others: NO
INJ5F	Fuel injector #5 circuit failed: YES Others: NO
INJ6F	Fuel injector #6 circuit failed: YES Others: NO
LFC	Cooling fan operating: ON Others: OFF
LFCF	Cooling fan circuit failed: YES Others: NO
LOAD	IG switch ON: 0% Idle: Approx. 20%
LONGFT1	Idle: +20%— –20%
LONGFT2	Idle: +20%— –20%
LOOP	During feedback control: CLOSED Others: OPEN
MAF	Idle (After warm up): 2.9—3.7 Gm/s (MTX), 2.9—4.0 Gm/s (ATX)
MIL	MIL ON: ON Others: OFF
MILF	MIL circuit failed: YES Others: NO
MISF	When misfire detected: ON Others: OFF
O2S11	Idle (After warm up): 0.1—0.9 V
O2S12	Idle (After warm up): 0.1—0.9 V
O2S21	Idle (After warm up): 0.1—0.9 V
O2S22	Idle (After warm up): 0.1—0.9 V

Monitor item	Reference Value/Condition
PIP	Idle: ON⇔OFF
PSP	Power steering operating: ON Others: OFF
PSP V	Power steering operating: 0 V Others: Approx. 4 V
RDEF	Rear window defroster ON: ON Others: OFF
RPM	Idle (After warm up): 550—750 (650 ± 100) rpm
SHRTFT1	Idle: +20%— –20%
SHRTFT2	Idle: +20%— –20%
SPRKADV	Idle (After warm up): 4—16° (10 ± 6°)
SS1	In 2nd gear or 3rd gear or 4th gear: ON Others: OFF
SS2	In 1st or 2nd gear: ON Others: OFF
SS3	In 1st gear or 4th gear: ON Others: OFF
TCC	Idle: 0%
TCS	O/D OFF switch pushed: ON Others: OFF
TFT	Idle (After warm up): Approx. 60 °C {140 °F}
TFT V	Transaxle fluid temperature 20 °C {68 °F}: Approx. 3.5 V
TP MODE	Closed throttle position: C/P Half throttle position: P/T Wide open throttle: WOT
TP V	Closed throttle position: 0.3—0.7 V Wide open throttle: 3.4—5.3 V
TP_MODE	Closed throttle position: C/P Half throttle position: P/T Wide open throttle: WOT
TR	Selector lever in P range: PARK Selector lever in R range: REV Selector lever in N range: NTRL Selector lever in D range and O/D ON: O/D Selector lever in D range and O/D OFF: DRIVE Selector lever in 2 range: MAN2 Selector lever in 1 range: MAN1
TR V	Selector lever in D, 2 or 1 range: Approx. 5.0 V Others: 0 V
TRIP	OBD II trip cycle completed: YES Others: NO
TRIPCNT	Indicates the total number of OBD II trip cycle completed
TSS	Idle (After warm up): Approx. 800 rpm
TSS/ISS	Idle (After warm up): Approx. 800 rpm
VPWR	Approx. 13 V
VSS	Indicates vehicle speed

MASS AIR FLOW SENSOR INSPECTION [KL]

W6U140W0D

Using the SST (104 Pin Breakout Box)

1. Check the mass air flow sensor for damage and cracks.
2. Remove the PCM. (Refer to 01–40B POWERTRAIN CONTROL MODULE (PCM) REMOVAL/INSTALLATION [KL].)
3. Connect the **SST** (104 Pin Breakout Box) to the PCM as shown.

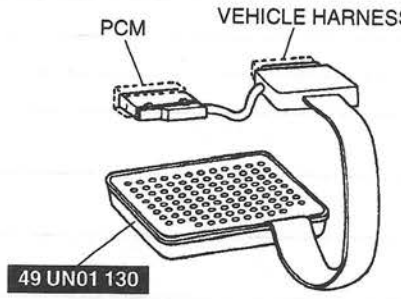

W6U140WM4

4. Tighten the connector bolt.

Tightening torque
7.9—10.7 N·m
{80—110 kgf·m, 69.5—95.4 in·lbf}

5. Measure the voltage at the PCM terminal 88 as shown in the table.

Specification

Measuring condition	Voltage (V)
Ignition switch ON	Below 1.0
Idle	1.0—2.0

6. If not as specified, inspect the following.
   (1) Harness continuity
   - Between PCM terminal 88 and mass air flow sensor terminal E
   - Between PCM terminal 36 and mass air flow sensor terminal D
   - Between PCM terminal 76 and mass air flow sensor terminal C
   - Between main relay terminal E and mass air flow sensor terminal B

   (2) Terminal voltage
   - Mass air flow sensor terminal B voltage: Battery positive voltage
   - Mass air flow sensor terminal C voltage: Below 1.0 V

7. If the terminal voltage is correct and there is harness continuity, replace the mass air flow sensor. (Refer to 01–13B INTAKE-AIR SYSTEM REMOVAL/INSTALLATION [KL].)

Using the SST (NGS Tester)

1. Check the mass air flow sensor for damage and cracks.
2. Connect the **SSTs** (NGS tester) to the data link connector.

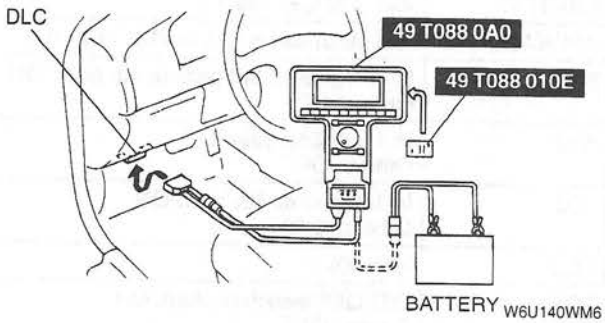

W6U140WM6

3. Turn the ignition switch to ON.
4. Select the "PID/DATA MONITOR AND RECORD" function on the NGS tester display and press TRIGGER.
5. Select "MAF V" on the NGS tester display and press START. The NGS tester measures and show the voltage.

Specification

Measuring condition	Voltage (V)
Ignition switch ON	Below 1.0
Idle	1.0—2.0

6. If not as specified, inspect the following.
   (1) Harness continuity
   - Between PCM terminal 88 and mass air flow sensor terminal E
   - Between PCM terminal 36 and mass air flow sensor terminal D
   - Between PCM terminal 76 and mass air flow sensor terminal C
   - Between main relay terminal E and mass air flow sensor terminal B

   (2) Terminal voltage
   - Mass air flow sensor terminal B voltage: Battery positive voltage
   - Mass air flow sensor terminal C voltage: Below 1.0 V

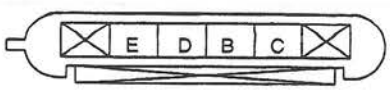

W6U140WM5

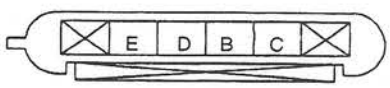

W6U140WM7

7. If the terminal voltage is correct and there is harness continuity, replace the mass air flow sensor. (Refer to 01–13B INTAKE-AIR SYSTEM REMOVAL/INSTALLATION [KL].)

Note
- The NGS shows the mass air flow rate and load value.

Specification

Engine speed (rpm)	Intake mass air flow (g/s)		Engine load calculated value (%)	
	MTX	ATX	MTX	ATX
600—700 (Idle)	2.9—3.7	2.9—4.0	19.0—22.0	19.0—23.0
Approx. 2,500*	9.9—12.1	9.9—12.7	16.0—19.0	16.0—20.0

* : No load, in neutral

CAMSHAFT POSITION SENSOR INSPECTION [KL]

W6U140W0E

1. Disconnect the camshaft position sensor connector.
2. Measure the resistance between terminals A and B by using an ohmmeter.

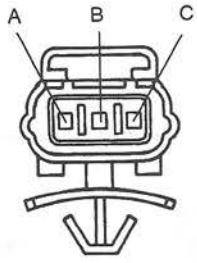

W6U140WM8

Specification
Approx. 550 Ω

3. If not as specified, check related wiring harness. If they are okay, replace the camshaft position sensor.

CAMSHAFT POSITION SENSOR REMOVAL/INSTALLATION [KL]

W6U140W0F

1. Disconnect the battery negative cable.
2. Disconnect the camshaft position sensor connector.
3. Remove the timing belt cover and timing belt. (Refer to 01–10B TIMING BELT REMOVAL/INSTALLATION [KL].)
4. Remove the cylinder head cover. (Refer to 01–10B CYLINDER HEAD GASKET REPLACEMENT [KL].)
5. Hold the camshaft by using a wrench on the cast hexagon as shown, loosen the camshaft pulley lock bolt.

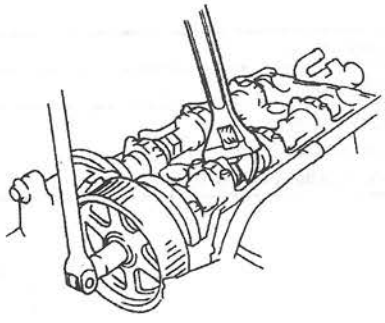

W6U140WM9

6. Remove the camshaft pulley lock bolt.
7. Remove the camshaft pulley.
8. Remove the camshaft position sensor.

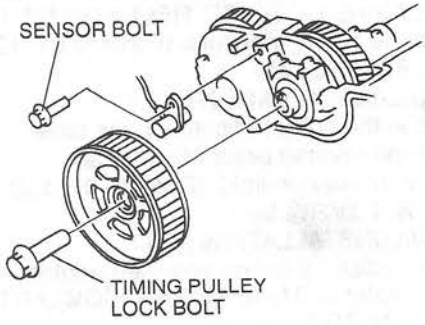

W6U140WMA

9. Install in the reverse order of removal.

Tightening torque
Timing pulley bolt: 123—140 N·m {12.5—14.3 kgf·m, 91—103 ft·lbf}
Sensor bolt: 7.9—10.7 N·m {80—110 kgf·cm, 69.5—95.4 ft·lbf}

KNOCK SENSOR INSPECTION [KL]

W6U140W0G

1. Verify that the ignition switch is OFF.
2. Disconnect knock sensor connector.
3. Measure the resistance between knock sensor terminal A and the knock sensor body by using an ohmmeter.

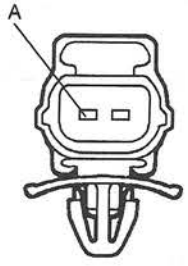

W6U140WNE

Specification
Approx. 560 kΩ [20 °C {68 °F}]

4. If not as specified, replace the knock sensor. (Refer to 01–40B KNOCK SENSOR REPLACEMENT [KL].)

KNOCK SENSOR REPLACEMENT [KL]

W6U140W0H

Warning

- **Fuel vapor is hazardous. It can vary easily ignite, causing serious injury and damage. Always keep sparks and flames away from fuel.**
- **Fuel line spills and leaks are dangerous. Fuel can ignite and cause serious injuries or death and damage. Fuel can also irritate skin and eyes. To prevent this, always complete the "BEFORE REPAIR PROCEDURE" (Refer to 01–14B BEFORE REPAIR PROCEDURE [KL].)**

1. Disconnect the negative battery cable.
2. Drain the coolant from the radiator. (Refer to 01–12 ENGINE COOLANT REPLACEMENT.)
3. Remove the intake manifold. (Refer to 01–13B INTAKE AIR SYSTEM REMOVAL/INSTALLATION [KL].)
4. Remove in the order indicated in the table.
5. Install in the reverse order of removal.
6. Install the intake manifold. (Refer to 01–13B INTAKE AIR SYSTEM REMOVAL/INSTALLATION [KL].)
7. Refill the radiator with the specified engine coolant. (Refer to 01–12 ENGINE COOLANT REPLACEMENT.)

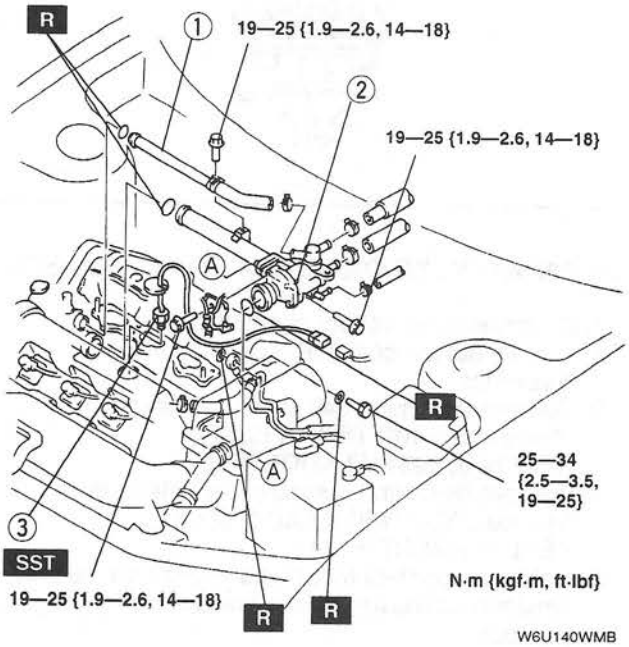

W6U140WMB

1	Bypass pipe
2	Water pipe
3	Knock sensor ☞ Removal Note ☞ Installation Note

Knock Sensor Removal/Installation Note

- Use the **SST** to remove and install the knock sensor.

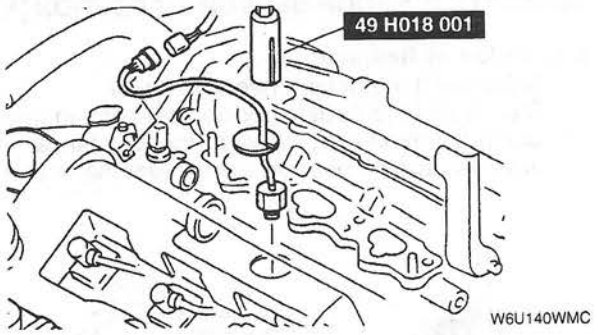

CRANKSHAFT POSITION SENSOR INSPECTION [KL]

W6U140W0J

Inspection of Resistance

1. Disconnect the battery negative cable.
2. Disconnect the crankshaft position sensor connector.
3. Measure the resistance between terminals A and B by using an ohmmeter.

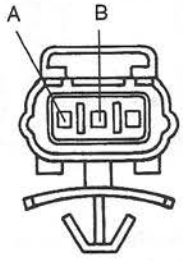

Specification
Approx. 550 Ω

4. If not as specified, check related wiring harness. If they are okay, replace the crankshaft position sensor.

Inspection of Air Gap

1. Verify that the crankshaft position sensor is installed correctly and securely.
2. Measure the air gap between the crankshaft pulley projection and the crankshaft position sensor by using a feeler gauge.

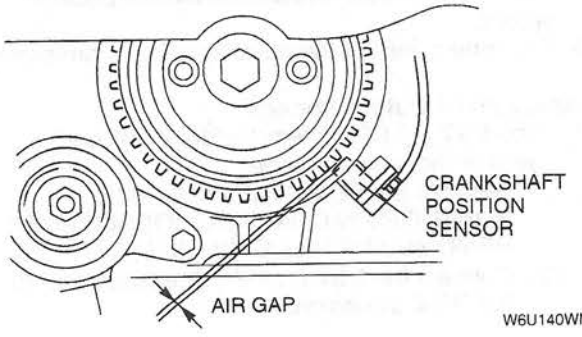

Specification
0.5—1.5 mm {0.020—0.059 in}

3. If not as specified, replace the crankshaft pulley or the crankshaft position sensor.

CRANKSHAFT POSITION SENSOR REPLACEMENT [KL]

W6U140W0K

1. Disconnect the negative battery cable.
2. Disconnect the crankshaft position sensor connector.
3. Remove the crankshaft position sensor.
4. Install in the reverse order of removal.

Tightening torque
7.9—10.7 N·m
{80—100 kgf·cm, 69.5—95.4 in·lbf}

5. Inspect the air gap. (Refer to 01–40B CRANKSHAFT POSITION SENSOR INSPECTION [KL], Inspection of Air Gap.)

THROTTLE POSITION SENSOR INSPECTION [KL]

Inspection of Resistance

1. Disconnect the battery negative cable.
2. Disconnect the throttle position sensor connector.
3. Using an ohmmeter, measure the resistance between throttle position sensor terminal A and C.

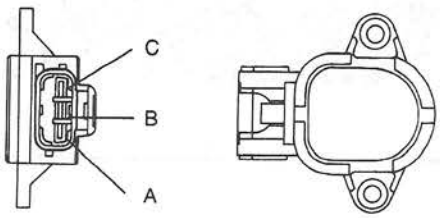

W6U140WMF

Specification
2.5—5.0 kΩ

4. If not as specified, replace the throttle position sensor.
5. Reconnect the throttle position sensor connector.

Inspection of Output Voltage

1. If the **SST** (104 Pin Breakout Box) are used, check in the following order.
   (1) Remove the PCM. (Refer to 01–40B POWERTRAIN CONTROL MODULE (PCM) REMOVAL/INSTALLATION [KL].)
   (2) Connect the **SST** (104 Pin Breakout Box) to the PCM as shown.

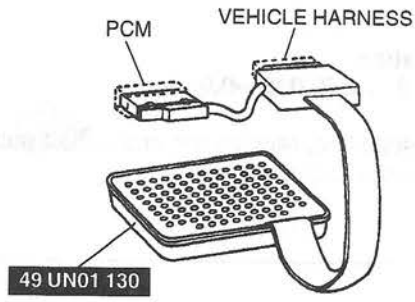

W6U140WMG

   (3) Tighten the connector attaching screws.

Tightening torque
7.9—10.7 N·m
{80—100 kgf·cm, 69.5—95.4 in·lbf}

W6U140W0L

   (4) Verify that the throttle valve is at the closed throttle position.
   (5) Turn the ignition switch to ON.
   (6) Measure the PCM terminal 89 voltage by using a voltmeter.

Specification
Closed throttle position: 0.3—1.0 V
Wide open throttle: 2.8—4.5 V
(Verify that the voltage increase is directly proportioned to the throttle valve opening angle.)

   (7) If not as specified, adjust the throttle position sensor.
2. If the **SSTs** (NGS tester) are used, check in the following order.
   (1) Connect the **SSTs** (NGS tester) to the data link connector.

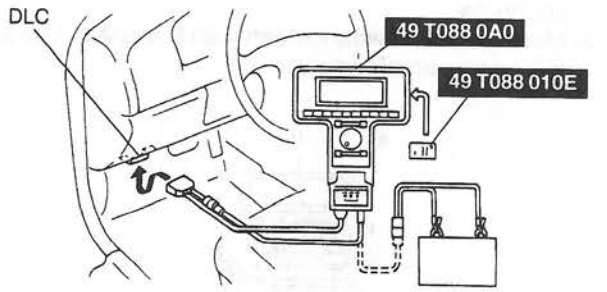

W6U140WMJ

   (2) Verify that the throttle valve is at the closed throttle position.
   (3) Turn the ignition switch to ON.
   (4) Select the "PID/DATA MONITOR AND RECORD" function on the NGS tester display and press TRIGGER.
   (5) Select "TP V" on the NGS tester display and press START. NGS tester measures and shows the voltage.

Specification
Closed throttle position: 0.3—1.0 V
Wide open throttle: 2.8—4.5 V
(Verify that the voltage increase is directly proportioned to the throttle valve opening angle.)

   (6) If not as specified, adjust the throttle position sensor.

THROTTLE POSITION SENSOR ADJUSTMENT [KL]

W6U140W0M

Caution
- **The throttle position sensor is adjusted at the factory before shipment. Unnecessary adjustment will negatively effect the engine performance.**
- **Adjusting the throttle position sensor by using the throttle adjusting screw (TAS) will negatively effect the engine performance.**

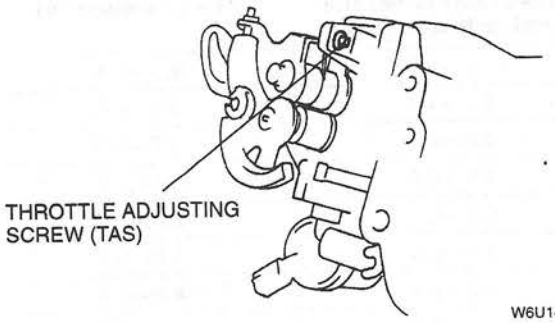

W6U140WNR

1. Verify that the throttle valve is at the closed throttle position.
2. Disconnect the throttle position sensor connector.
3. Turn the ignition switch to ON.
4. Measure the voltage at harness side connector terminal B by using an ohmmeter and record it.

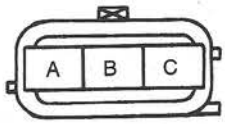

W6U140WMH

Specification
4.5—5.5 V

5. Turn the ignition switch to OFF.
6. Connect the throttle position sensor connector.
7. Loosen the attaching screws.

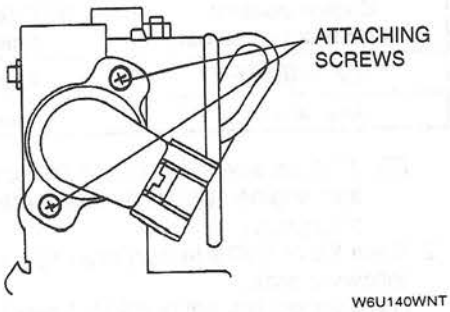

W6U140WNT

8. If the **SST** (104 Pin Breakout Box) are used, check in the following order.

(1) Remove the PCM. (Refer to 01–40B POWERTRAIN CONTROL MODULE (PCM) REMOVAL/INSTALLATION [KL].)
(2) Connect the **SST** (104 Pin Breakout Box) to the PCM as shown.

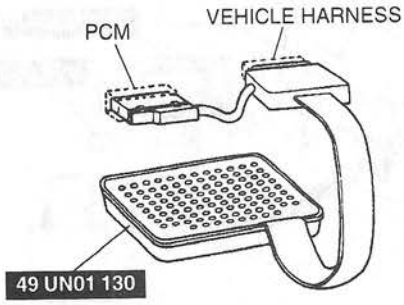

W6U140WNF

(3) Tighten the connector bolt.

Tightening torque
7.9—10.7 N·m
{80—100 kgf·cm, 69.5—95.4 in·lbf}

(4) Verify that the throttle valve is at the closed throttle position.
(5) Turn the ignition switch to ON.
(6) Rotate the throttle link by hand and adjust the PCM terminal 89 voltage to specification.

Specification (At closed throttle position)

Throttle position sensor harness side connector terminal B voltage (V)	PCM terminal 89 voltage (V)
4.5—4.9	0.4—0.5
4.9—5.1	0.4—0.6
5.1—5.5	0.5—0.6

(7) Tighten the attaching screws.

Specification
1.6—2.3 N·m {16—24 kgf·m, 14—20 in·lbf}

(8) When the throttle valve is at the wide open throttle, verify that the PCM terminal 89 voltage is in the specification.

Specification (At wide open throttle)

Throttle position sensor harness side connector terminal B voltage (V)	PCM terminal 89 voltage (V)
4.5—4.7	3.5—4.4
4.7—4.8	3.6—4.5
4.8—4.9	3.7—4.6
4.9—5.0	3.7—4.8
5.0—5.1	3.8—4.9
5.1—5.3	4.0—5.0
5.3—5.4	4.1—5.1
5.4—5.5	4.2—5.2

(9) If not as specified, check related wiring harness. If they are okay, replace the throttle body.

9. If the **SSTs** (NGS tester) are used, check in the following order.
   (1) Connect the **SSTs** (NGS tester) to the data link connector.

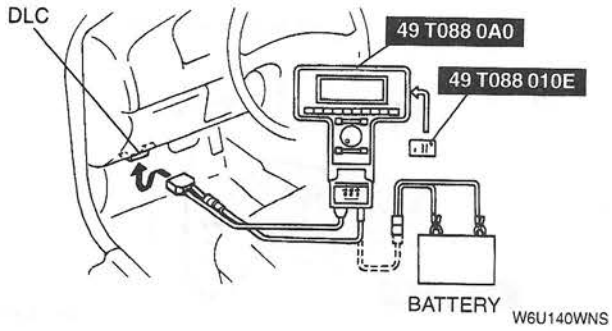

   (2) Verify that the throttle valve is at the closed throttle position.
   (3) Turn the ignition switch to ON.
   (4) Select the "PID/DATA MONITOR AND RECORD" function on the NGS display and press TRIGGER.
   (5) Select "TP V" on the NGS tester display and press START. The NGS tester measures and shows the voltage.

Specification (At closed throttle position)

Throttle position sensor harness side connector terminal B voltage (V)	"TP V" voltage (V)
4.5—4.9	0.4—0.5
4.9—5.1	0.4—0.6
5.1—5.5	0.5—0.6

   (6) Tighten the attaching screws.

Specification
1.6—2.3 N·m {16—24 kgf·m, 14—20 in·lbf}

   (7) When the throttle valve is at the wide open throttle, verify that the "TP V" voltage is in the specification.

Specification (At wide open throttle)

Throttle position sensor harness side connector terminal B voltage (V)	"TP V" voltage (V)
4.5—4.7	3.5—4.4
4.7—4.8	3.6—4.5
4.8—4.9	3.7—4.6
4.9—5.0	3.7—4.8
5.0—5.1	3.8—4.9
5.1—5.3	4.0—5.0
5.3—5.4	4.1—5.1
5.4—5.5	4.2—5.2

   (8) If not as specified, check related wiring harness. If they are okay, replace the throttle body.

ENGINE COOLANT TEMPERATURE SENSOR INSPECTION [KL]

W6U140W0N

Inspection of Output Voltage

1. If the **SST** (104 Pin Breakout Box) are used, check in the following order.
   (1) Remove the PCM. (Refer to 01–40B POWERTRAIN CONTROL MODULE (PCM) REMOVAL/INSTALLATION [KL].)
   (2) Connect the **SST** (104 Pin Breakout Box) to the PCM as shown.

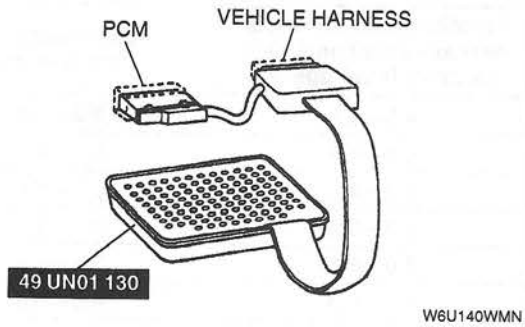

   (3) Tighten the connector bolt.

Tightening torque
7.9—10.7 N·m
{80—100 kgf·cm, 69.5—95.4 in·lbf}

   (4) Turn the ignition switch to ON.
   (5) Measure the voltage at PCM terminal 38.

Specification

Engine coolant temperature condition	PCM terminal 38 voltage (V)
20 °C {68 °F}	Approx. 3.1
After warm up	Below 1.0

   (6) If not as specified, check the related harness and engine coolant temperature sensor resistance.

2. If the **SSTs** (NGS tester) are used, check in the following order.
   (1) Connect the **SSTs** (NGS tester) to the data link connector.

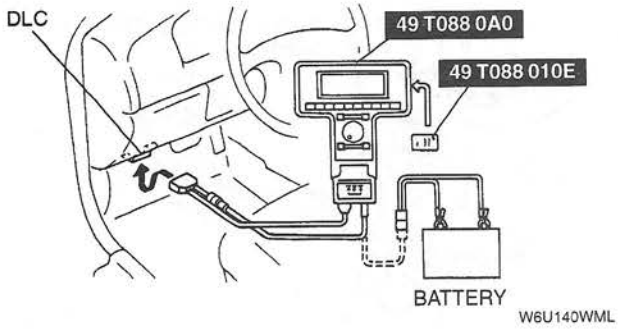

(2) Turn the ignition switch to ON.
(3) Select the "PID/DATA MONITOR AND RECORD" function on the NGS tester display and press TRIGGER.
(4) Select "ECT V" on the NGS tester display and press START. The NGS tester measures and shows the voltage.

Specification

Engine coolant temperature condition	"ECT V" voltage (V)
20 °C {68 °F}	Approx. 3.1
After warm up	Below 1.0

(5) If not as specified, check the related harness and engine coolant temperature sensor resistance.

Inspection of Resistance

1. Remove the engine coolant temperature sensor.
2. Place the engine coolant temperature sensor in water with a thermometer, and heat the water gradually.
3. Measure the resistance of the sensor by using an ohmmeter.

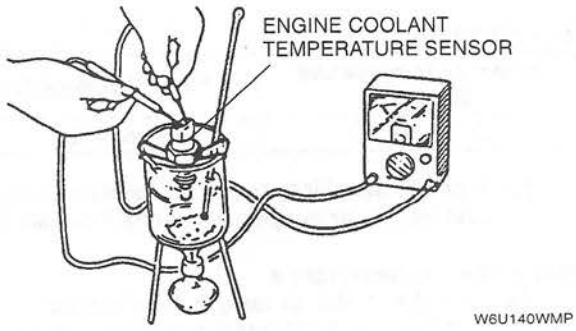

Specification

Water temperature (°C {°F})	Resistance (kΩ)
20 {68}	35.5—39.2
60 {140}	7.18—7.92

4. If not as specified, replace the engine coolant temperature sensor.

Tightening torque
15.7—23.5 N·m
{1.6—2.4 kgf·m, 11.6—17.3 ft·lbf}

INTAKE AIR TEMPERATURE SENSOR INSPECTION [KL]

W6U140W0P

Inspection of Output Voltage

1. If the **SST** (104 Pin Breakout Box) are used, check in the following order.
   (1) Remove the PCM. (Refer to 01–40B POWERTRAIN CONTROL MODULE (PCM) REMOVAL/INSTALLATION [KL].)
   (2) Connect the **SST** (104 Pin Breakout Box) to the PCM as shown.

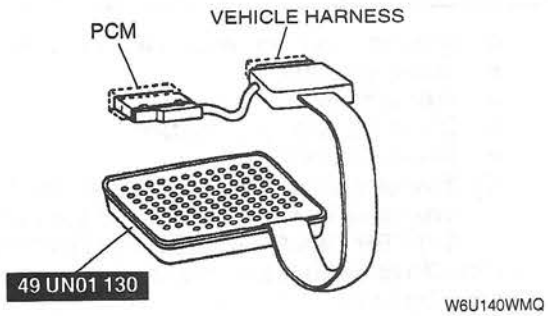

(3) Tighten the connector bolt.

Tightening torque
7.9—10.7 N·m
{80—100 kgf·cm, 69.5—95.4 in·lbf}

(4) Turn the ignition switch to ON.
(5) Measure the voltage at PCM terminal 39.

Specification

Intake air temperature condition	PCM terminal 39 voltage (V)
20 °C {68 °F}	Approx. 3.1

(6) If not as specified, check the related harness and intake air temperature sensor resistance.

2. If the **SSTs** (NGS tester) are used, check in the following order.
   (1) Connect the **SSTs** (NGS tester) to the data link connector.

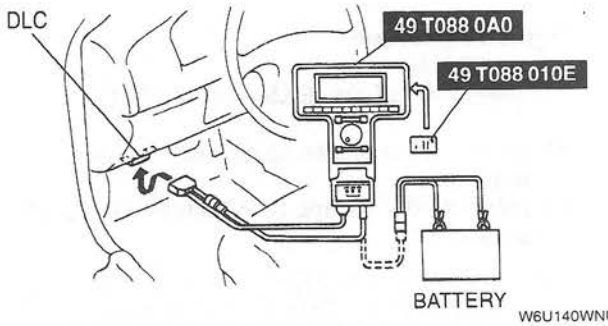

(2) Turn the ignition switch to ON.
(3) Select the "PID/DATA MONITOR AND RECORD" function on the NGS tester display and press TRIGGER.
(4) Select "IAT V" on the NGS tester display and press START. The NGS tester measures and shows the voltage.

Specification

Intake air temperature condition	"IAT V" voltage (V)
20 °C {68 °F}	Approx. 3.1

(5) If not as specified, check the related harness and intake air temperature sensor resistance.

Inspection of Resistance

1. Remove the intake air temperature sensor.
2. Place the intake air temperature sensor in water with a thermometer, and heat the water gradually.
3. Measure the resistance of the intake air temperature sensor by using an ohmmeter.

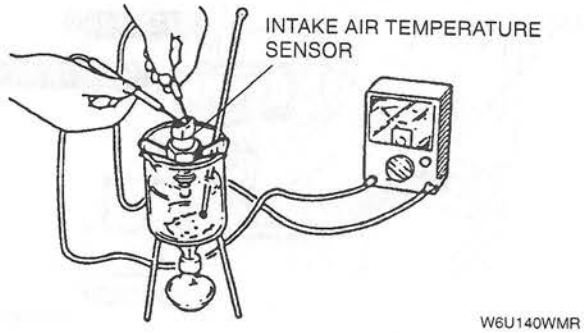

W6U140WMR

Specification

Water temperature (°C {°F})	Resistance (kΩ)
20 {68}	35.5—39.2
60 {140}	7.18—7.92

4. If not as specified, replace the intake air temperature sensor.

Tightening torque
10.8—16.2 N·m
{110—166 kgf·cm, 95.5—144 in·lbf}

HEATED OXYGEN SENSOR INSPECTION [KL]

W6U140W0Q

Heated Oxygen Sensor Inspection

1. If the **SST** (104 Pin Breakout Box) are used, check in the following order.
   (1) Remove the PCM. (Refer to 01–40B POWERTRAIN CONTROL MODULE (PCM) REMOVAL/INSTALLATION [KL].)
   (2) Connect the **SST** (104 Pin Breakout Box) to the PCM as shown.

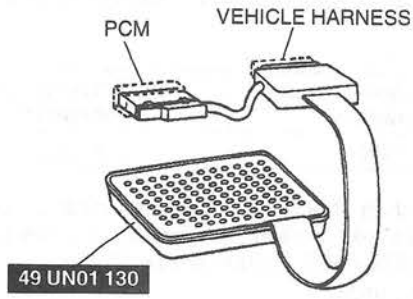

W6U140WMS

   (3) Tighten the connector bolt.

Tightening torque
7.9—10.7 N·m
{80—100 kgf·cm, 69.5—95.4 in·lbf}

   (4) Warm up the engine to normal operating temperature.
   (5) Measure the voltage at PCM terminal 35, 60, 61 and 87.

Specification

Engine condition	PCM terminal voltage (V)			
	60	87	35	61
	Heated oxygen sensor (Front RH)	Heated oxygen sensor (Front LH)	Heated oxygen sensor (Middle)	Heated oxygen sensor (Rear)
IG–ON	Below 1.0			
After warm up	0.1—0.9			
Engine cold	Below 0.5	Below 0.5	Below 0.5	Approx. 0
Deceleration	0—0.5	0—0.5	0—0.5	—
Acceleration	0.5—1.0	0.5—1.0	0.5—1.0	—

   (6) If not as specified, inspect the following.
   - Intake-air system
   - Fuel system
   - On-board diagnostic system
   - Related harnesses

   (7) If these systems are okay, replace the heated oxygen sensor. (Refer to 01–15 EXHAUST SYSTEM REMOVAL/INSTALLATION [KL].)
2. If the **SSTs** (NGS tester) are used, check in the following order.
   (1) Connect the **SSTs** (NGS tester) to the data link connector.

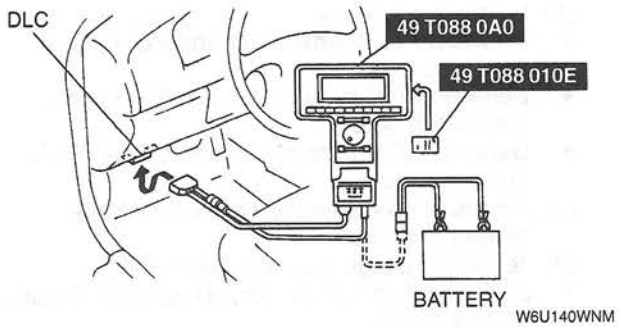

(2) Select the "PID/DATA MONITOR AND RECORD" function on the NGS tester display and press TRIGGER.
(3) Select "O2S11", "O2S21", "O2S12" and "O2S13" on the NGS tester display and press START. The NGS tester measures and shows the voltage.

Specification

Engine condition	Voltage (V)			
	O2S11	O2S21	O2S12	O2S13
IG–ON	Below 1.0			
After warm up	0.1—0.9			
Engine cold	Below 0.5	Below 0.5	Below 0.5	Approx. 0
Deceleration	0—0.5	0—0.5	0—0.5	—
Acceleration	0.5—1.0	0.5—1.0	0.5—1.0	—

(4) If not as specified, inspect the following.
- Intake-air system
- Fuel system
- On-board diagnostic system

(5) If these systems are okay, replace the heated oxygen sensor. (Refer to 01–15 EXHAUST SYSTEM REMOVAL/INSTALLATION.)

Heated Oxygen Sensor Heater Inspection

1. Disconnect the heated oxygen sensor connector.
2. Measure the resistance between heated oxygen sensor terminals C and D by using an ohmmeter.

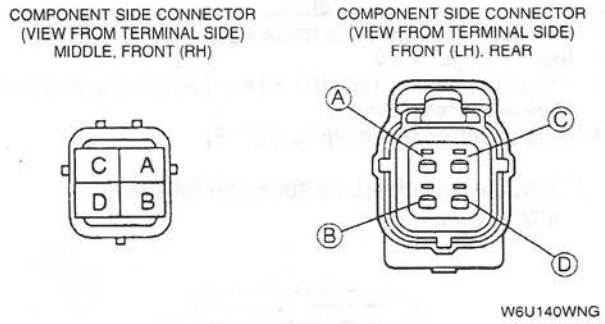

Specification
Approx. 6 Ω

3. If not as specified, replace the heated oxygen sensor. (Refer to 01–15 EXHAUST SYSTEM REMOVAL/INSTALLATION [KL].)

EGR BOOST SENSOR INSPECTION [KL]

W6U140W0R

Note
- The following vacuum values are indicated by relative pressure from atmospheric pressure.

1. Remove the PCM. (Refer to 01–40B POWERTRAIN CONTROL MODULE (PCM) REMOVAL/INSTALLATION [KL].)
2. Connect the **SST** (104 Pin Breakout Box) to the PCM as shown.

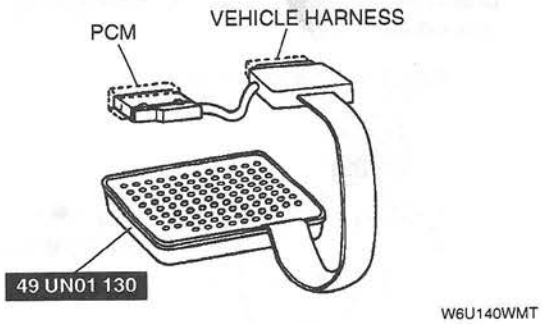

3. Tighten the connector bolt.

Tightening torque
7.9—10.7 N·m
{80—100 kgf·cm, 69.5—95.4 in·lbf}

Caution
- **Do not apply a vacuum outside of the specified limits. Doing so will damage the EGR boost sensor.**

4. Turn the ignition switch to ON.
5. Apply vacuum to the EGR boost sensor according to the following procedure.

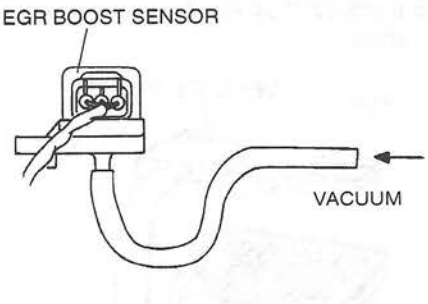

Note
- The output voltage varies with the measuring condition.

6. Increase the applied vacuum from 0 kPa {0 mmHg, 0 inHg} to –81.3 kPa {–610 mmHg, –24.0 inHg} and verify that the PCM terminal 89 voltage decreases accordingly as specified.

Specification

Applied vacuum	Output voltage (V)*
0 kPa {0 mmHg, 0 inHg}	3.600—4.400
–54.7 kPa {–410 mmHg, –16.1 inHg}	1.658—2.026
–81.3 kPa {–610 mmHg, –24.0 inHg}	0.711—0.867

* : Measuring condition is following.
- Input voltage: 5.0 V
- Atmospheric pressure: 101.3 kPa {760 mmHg, 29.9 inHg} (Absolute pressure)
- Outside temperature: 25 °C {77 °F}

7. If not as specified, perform the following inspection.

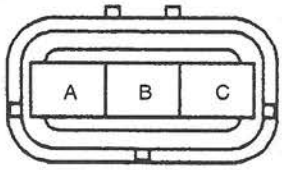

HARNESS SIDE CONNECTOR
(VIEW FROM VEHICLE HARNESS CONNECTOR)

W6U140WNH

(1) Harness continuity
- Between PCM terminal 34 and EGR boost sensor terminal A
- Between PCM terminal 91 and EGR boost sensor terminal B
- Between PCM terminal 90 and EGR boost sensor terminal C

(2) If there is no continuity, repair or replace related harness.
(3) Terminal voltage (Ignition switch ON)
- EGR boost sensor terminal B voltage: Ground (Below 1.0 V)
- EGR boost sensor terminal C voltage: Constant voltage (4.5—5.5 V)

(4) If terminal voltage is incorrect, check the PCM.

8. If terminal voltage is correct and if there is harness continuity, replace the EGR boost sensor.

FUEL TANK PRESSURE SENSOR INSPECTION [KL]

W6U140W0S

Using the SST (104 Pin Breakout Box)

Note
- The following vacuum values are indicated by relative pressure from atmospheric pressure.

1. Remove the PCM. (Refer to 01–40B POWERTRAIN CONTROL MODULE (PCM) REMOVAL/INSTALLATION [KL].)
2. Connect the **SST** (104 Pin Breakout Box) to the PCM as shown.

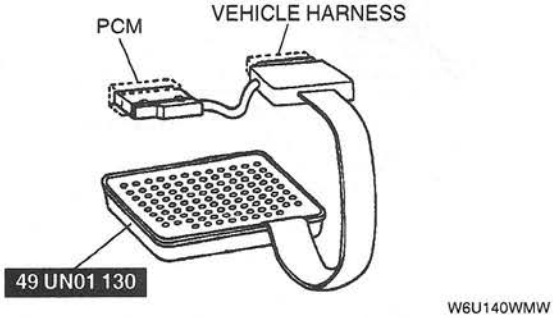

W6U140WMW

3. Tighten the connector bolt.

Tightening torque
7.9—10.7 N·m
{80—100 kgf·cm, 69.5—95.4 in·lbf}

Caution
- **Do not apply a vacuum outside of the specified limits. Doing so will damage the fuel tank pressure sensor.**

4. Turn the ignition switch to ON.
5. Apply pressure then a vacuum to the fuel tank pressure sensor according to the following procedure.

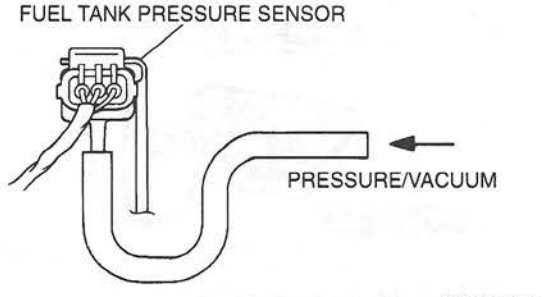

W6U140WMX

Note
- The output voltage varies with the measuring condition.

6. Decrease the applied pressure from +6.66 kPa {+50 mmHg, +1.97 inHg} to –6.66 kPa {–50 mmHg, –1.97 inHg} and verify that the PCM terminal 62 voltage decreases accordingly as specified.

Specification

Applied vacuum	Output voltage (V)*
–6.66 kPa {–50 mmHg, –1.97 inHg}	0.45—0.55
0 kPa {0 mmHg, 0 inHg}	2.25—2.75
+6.66 kPa {+50 mmHg, +1.97 inHg}	4.05—4.95

* : Measuring condition is following.
- Input voltage: 5.0 V
- Atmospheric pressure: 101.3 kPa {760 mmHg, 29.9 inHg} (Absolute pressure)
- Outside temperature: 30—100 °C {0—182 °F}

7. If not as specified, perform the following inspection.

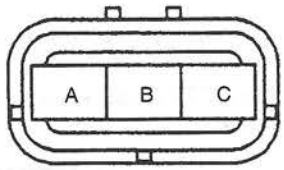

HARNESS SIDE CONNECTOR
(VIEW FROM VEHICLE HARNESS CONNECTOR)

W6U140WNJ

(1) Harness continuity
- Between PCM terminal 91 and fuel tank pressure sensor terminal A
- Between PCM terminal 62 and fuel tank pressure sensor terminal B
- Between PCM terminal 90 and fuel tank pressure sensor terminal C

(2) If there is no continuity, repair or replace related harness.
(3) Terminal voltage (Ignition switch ON)
- Fuel tank pressure sensor terminal A voltage: Ground (Below 1.0 V)
- Fuel tank pressure sensor terminal C voltage: Constant voltage (4.5—5.5 V)

(4) If terminal voltage is incorrect, check the PCM.

8. If terminal voltage is correct and if there is harness continuity, replace the fuel tank pressure sensor.

Using the SSTs (NGS Tester)

Note
- The following vacuum values are indicated by relative pressure from atmospheric pressure.

1. Connect the **SSTs** (NGS tester) to the data link connector.

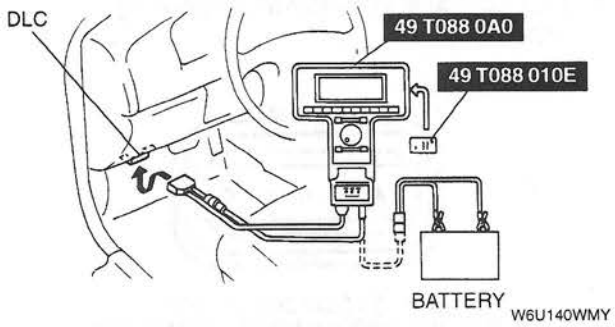

W6U140WMY

2. Select the "PID/DATA MONITOR AND RECORD" function on the NGS tester display and press TRIGGER.
3. Select "FTP V" on the NGS tester display and press START. The NGS tester measure and shows the voltage.
4. Turn the ignition switch to ON.

Caution
- **Do not apply a vacuum outside of the specified limits. Doing so will damage the fuel tank pressure sensor.**

5. Apply pressure then a vacuum to the fuel tank pressure sensor according to the following procedure.

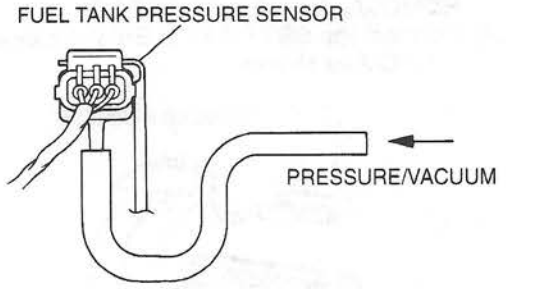

W6U140WMZ

Note
- The output voltage varies with the measuring condition.

6. Decrease the applied pressure from +6.66 kPa {+50 mmHg, +1.97 inHg} to –6.66 kPa {–50 mmHg, –1.97 inHg} and verify that the "FTP V" voltage decreases accordingly as specified.

Specification

Applied vacuum	"FTP V" voltage (V)*
–6.66 kPa {–50 mmHg, –1.97 inHg}	0.45—0.55
0 kPa {0 mmHg, 0 inHg}	2.25—2.75
+6.66 kPa {+50 mmHg, +1.97 inHg}	4.05—4.95

* : Measuring condition is following.
- Input voltage: 5.0 V
- Atmospheric pressure: 101.3 kPa {760 mmHg, 29.9 inHg} (Absolute pressure)
- Outside temperature: 30—100 °C {0—182 °F}

7. If not as specified, perform the following inspection.

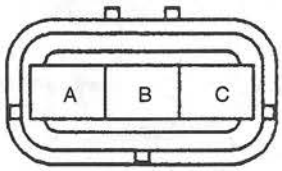

HARNESS SIDE CONNECTOR
(VIEW FROM VEHICLE HARNESS CONNECTOR)

W6U140WNK

(1) Harness continuity
- Between PCM terminal 91 and fuel tank pressure sensor terminal A
- Between PCM terminal 62 and fuel tank pressure sensor terminal B
- Between PCM terminal 90 and fuel tank pressure sensor terminal C

(2) If there is no continuity, repair or replace related harness.
(3) Terminal voltage (Ignition switch ON)
- Fuel tank pressure sensor terminal A voltage: Ground (Below 1.0 V)
- Fuel tank pressure sensor terminal C voltage: Constant voltage (4.5—5.5 V)

(4) If terminal voltage is incorrect, check the PCM.

8. If terminal voltage is correct and if there is harness continuity, replace the fuel tank pressure sensor.

POWER STEERING PRESSURE SWITCH INSPECTION [KL]

W6U140W0T

Inspection of Output Voltage

1. If the **SST** (104 Pin Breakout Box) are used, check in the following order.
   (1) Remove the PCM. (Refer to 01–40B POWERTRAIN CONTROL MODULE (PCM) REMOVAL/INSTALLATION [KL].)
   (2) Connect the **SST** (104 Pin Breakout Box) to the PCM as shown.

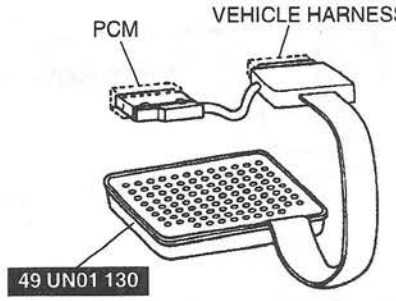

W6U140WN0

   (3) Tighten the connector bolt.

Tightening torque
7.9—10.7 N·m
{80—100 kgf·cm, 69.5—95.4 in·lbf}

   (4) Warm up the engine to normal operating temperature.
   (5) Turn the ignition switch to ON.
   (6) Measure the voltage at PCM terminal 31.

Specification

Steering wheel condition	PCM terminal 31 voltage (V)
Steering wheel fully turned	B+
Steering wheel straight ahead position	Below 1.0

   (7) If not as specified, check the related harness and power steering pressure switch continuity.

2. If the **SSTs** (NGS tester) are used, check in the following order.
   (1) Connect the **SSTs** (NGS tester) to the data link connector.

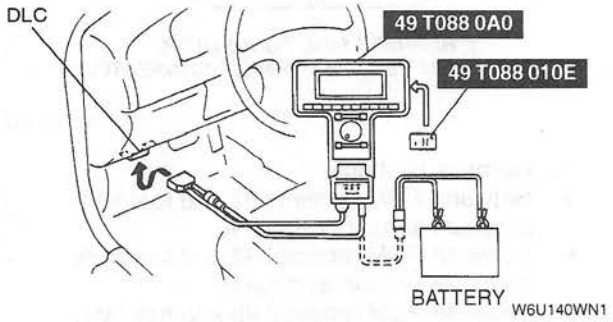

W6U140WN1

   (2) Warm up the engine to normal operating temperature.
   (3) Turn the ignition switch to ON.
   (4) Select the "PID/DATA MONITOR AND RECORD" function on the NGS tester display and press TRIGGER.
   (5) Select "PSP" on the NGS tester display and press START. The NGS tester measures and shows the operation.

Specification

Steering wheel condition	"PSP" operation (V)
Steering wheel fully turned	OFF
Steering wheel straight ahead position	ON

   (6) If not as specified, check the related harness and power steering pressure switch continuity.

Inspection of Continuity

1. Disconnect the power steering pressure switch connector.
2. Connect an ohmmeter to the power steering pressure switch.

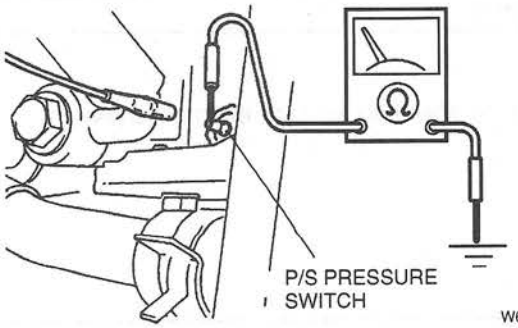

W6U140WN2

3. Start the engine and let it at idle. Check continuity of the power steering pressure switch while turning steering wheel.

Note

- Show wire and connector in diagram. It is easier to test from connector than the power steering pressure switch on the power steering oil pump.

○—○ : Continuity

Steering wheel condition	Terminal	
	A	Ground
Steering wheel fully turned	○	○
Steering wheel straight ahead position		

W6U140WNL

4. If not as specified, replace the power steering pressure switch. (Refer to 06–12 POWER STEERING OIL PUMP DISASSEMBLY/ASSEMBLY.)

NEUTRAL SWITCH INSPECTION [KL]

Inspection of Output Voltage

1. If the **SST** (104 Pin Breakout Box) are used, check in the following order.
   (1) Remove the PCM. (Refer to 01–40B POWERTRAIN CONTROL MODULE (PCM) REMOVAL/INSTALLATION [KL].)
   (2) Connect the **SST** (104 Pin Breakout Box) to the PCM as shown.

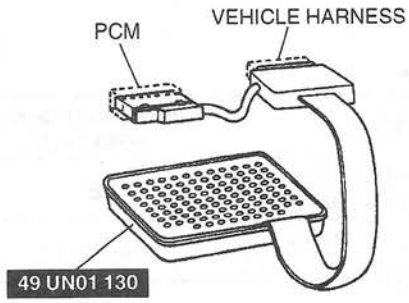

W6U140WN3

   (3) Tighten the connector bolt.

Tightening torque
7.9—10.7 N·m
{80—100 kgf·cm, 69.5—95.4 in·lbf}

   (4) Turn the ignition switch to ON.
   (5) Measure the voltage at PCM terminal 64.

Specification

Condition	PCM terminal 64 voltage (V)
Other than neutral position and clutch pedal released	B+
Neutral position or clutch pedal depressed	Below 1.0

W6U140W0Y

   (6) If not as specified, check the related harness and neutral switch continuity.
   (7) If okay, check the clutch switch.
2. If the **SSTs** (NGS tester) are used, check in the following order.
   (1) Connect the **SSTs** (NGS tester) to the data link connector.

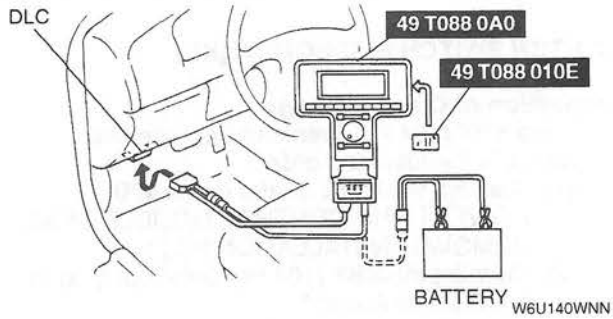

W6U140WNN

   (2) Turn the ignition switch to ON.
   (3) Select the "PID/DATA MONITOR AND RECORD" function on the NGS tester display and press TRIGGER.
   (4) Select "CPP/PNP" on the NGS tester display and press START. The NGS tester measures and shows the operation.

Specification

Condition	"CPP/PNP" operation (V)
Other than neutral position and clutch pedal released	OFF
Neutral position or clutch pedal depressed	ON

   (5) If not as specified, check the related harness and neutral switch continuity.
   (6) If okay, check the clutch switch.

Inspection of Continuity

1. Disconnect the neutral switch connector.
2. Check continuity of the switch by using an ohmmeter.

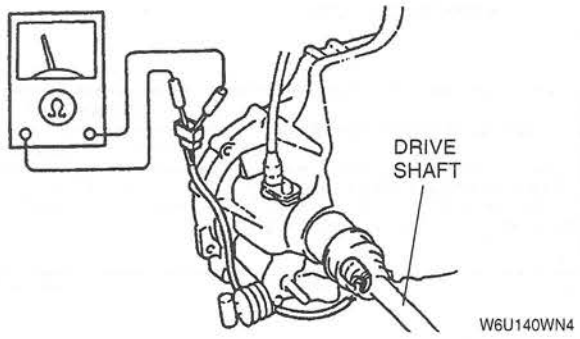

W6U140WN4

○—○ : Continuity

Condition	Terminal	
	A	B
Neutral	○	○
Other		

W6U140WN5

3. If not as specified, replace the neutral switch.

NEUTRAL SWITCH REMOVAL/INSTALLATION [KL]

W6U140W0U

1. Disconnect the battery negative cable.
2. Disconnect the neutral switch connector.
3. Remove the neutral switch.
4. Install the reverse order of removal.

Tightening torque
20—29 N·m {2.0—3.0 kgf·m, 15—21 ft·lbf}

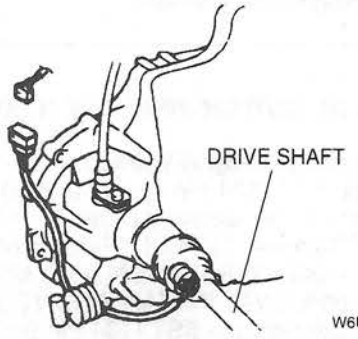

W6U140WN6

CLUTCH SWITCH INSPECTION [KL]

W6U140W0V

Inspection of Output Voltage

1. If the **SST** (104 Pin Breakout Box) are used, check in the following order.
   (1) Remove the PCM. (Refer to 01–40B POWERTRAIN CONTROL MODULE (PCM) REMOVAL/INSTALLATION [KL].)
   (2) Connect the **SST** (104 Pin Breakout Box) to the PCM as shown.

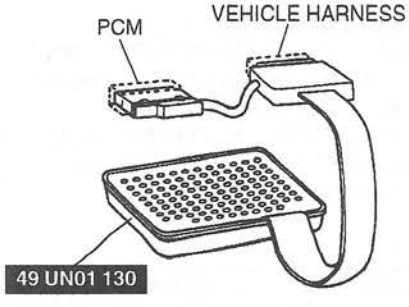

W6U140WN7

   (3) Tighten the connector bolt.

Tightening torque
7.9—10.7 N·m
{80—100 kgf·cm, 69.5—95.4 in·lbf}

   (4) Turn the ignition switch to ON.
   (5) Measure the voltage at PCM terminal 64.

Specification

Condition	PCM terminal 64 voltage (V)
Other than neutral position and clutch pedal released	B+
Neutral position or clutch pedal depressed	Below 1.0

   (6) If not as specified, check the related harness and clutch switch continuity.
   (7) If okay, check the neutral switch.
2. If the **SSTs** (NGS tester) are used, check in the following order.
   (1) Connect the **SSTs** (NGS tester) to the data link connector.

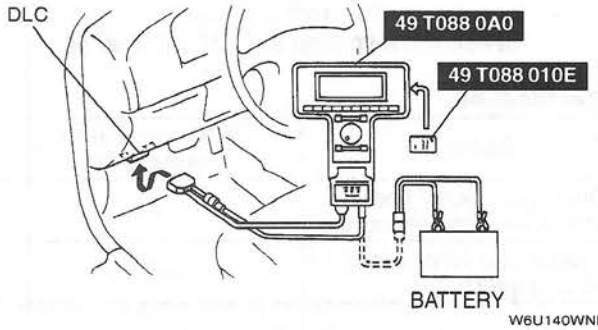

W6U140WNP

   (2) Turn the ignition switch to ON.

(3) Select the "PID/DATA MONITOR AND RECORD" function on the NGS tester display and press TRIGGER.
(4) Select "CPP/PNP" on the NGS tester display and press START. The NGS tester measures and shows the operation.

Specification

Condition	"CPP/PNP" operation (V)
Other than neutral position and clutch pedal released	OFF
Neutral position or clutch pedal depressed	ON

(5) If not as specified, check the related harness and clutch switch continuity.
(6) If okay, check the neutral switch.

Inspection of Continuity

1. Disconnect the clutch switch connector.
2. Check continuity of the clutch switch by using an ohmmeter.

○—○ : Continuity

Condition	Terminal	
	C	E
Clutch pedal depressed	○	○
Clutch pedal released		

W6U140WN9

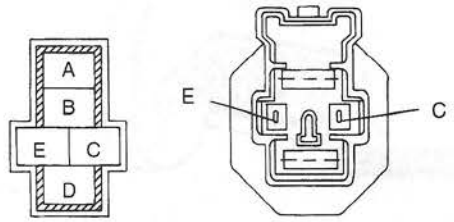

W6U140WN8

3. If not as specified, replace the clutch switch.

CLUTCH SWITCH REMOVAL/INSTALLATION [KL]

W6U140W0W

1. Disconnect the battery negative cable.
2. Disconnect the clutch switch connector.
3. Remove the cluch switch.
4. Install the clutch switch as shown in the figure.

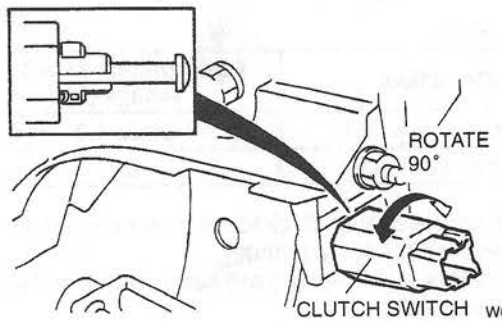

W6U140WNA

MAIN RELAY INSPECTION [KL]

W6U140W0X

Inspection of Output Voltage

1. If the **SST** (104 Pin Breakout Box) are used, check in the following order.
   (1) Remove the PCM. (Refer to 01–40B POWERTRAIN CONTROL MODULE (PCM) REMOVAL/INSTALLATION [KL].)
   (2) Connect the **SST** (104 Pin Breakout Box) to the PCM as shown.

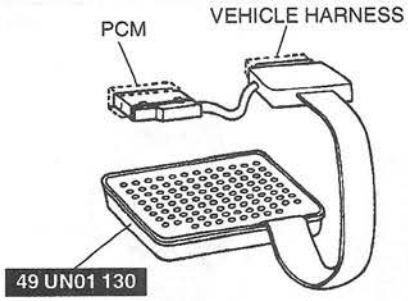

W6U140WNB

   (3) Tighten the connector bolt.

Tightening torque
7.9—10.7 N·m
{80—100 kgf·cm, 69.5—95.4 in·lbf}

   (4) Turn the ignition switch to ON.
   (5) Measure the voltage at PCM terminal 71 and 97.

Specification

Condition	PCM terminal 71 or 97 voltage (V)
Ignition switch OFF	Below 1.0
Ignition switch ON	B+

   (6) If not as specified, check the related harness and main relay continuity.

2. If the **SSTs** (NGS tester) are used, check in the following order.
   (1) Connect the **SSTs** (NGS tester) to the data link connector.

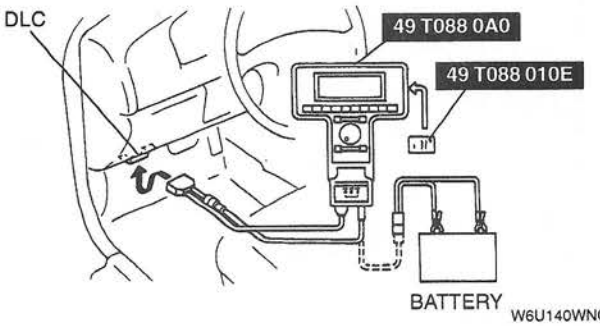

W6U140WNQ

   (2) Turn the ignition switch to ON.
   (3) Select the "PID/DATA MONITOR AND RECORD" function on the NGS tester display and press TRIGGER.
   (4) Select "VPWR" on the NGS tester display and press START. The NGS tester measures and shows the voltage.

Specification

Condition	"VPWR" voltage (V)
Ignition switch OFF	Below 1.0
Ignition switch ON	B+

   (5) If not as specified, check the related harness and main relay continuity.

Inspection of Continuity

1. Remove the main relay.
2. Apply battery positive voltage and check continuity between terminals of the main relay by using an ohmmeter.

○—○ : Continuity

Step	Terminal			
	A (86)	F (85)	B (87)	E (30)
1	○	○		
2	B+	GND	○	○

W6U140WND

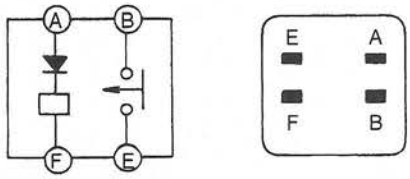

W6U140WNC

3. If not as specified, replace the main relay.

01–50 TECHNICAL DATA

01 ENGINE 01–50–1

01 ENGINE

W6U150W01

Item			Engine			
			FS		KL	
			MTX	ATX	MTX	ATX
MECHANICAL						
Drive belt deflection (mm {in}/98 N {10 kgf, 22 lbf})	Generator	New	6.5—7.0 {0.26—0.27}		6.0—7.0 {0.24—0.27}	
		Used	7.0—9.0 {0.28—0.35}		7.0—8.0 {0.28—0.31}	
		Limit	10.0 {0.39}		10.0 {0.39}	
	P/S	New	7.5—9.0 {0.30—0.35}		6.0—7.0 {0.24—0.27}	
		Used	8.0—9.5 {0.31—0.37}		7.0—8.0 {0.28—0.31}	
		Limit	11.0 {0.43}		9.0 {0.35}	
	P/S+A/C	New	5.5—6.5 {0.22—0.25}		—	
		Used	6.5—7.5 {0.26—0.29}		—	
		Limit	8.0 {0.31}		—	
	Generator + A/C	New	—		5.5—6.5 {0.22—0.25}	
		Used	—		6.5—7.5 {0.26—0.29}	
		Limit	—		9.0 {0.35}	
Drive belt tension (N {kgf, lbf})	Generator	New	736—833 {75—85, 165—187}		687—882 {70—90, 154—198}	
		Used	491—686 {50—70, 110—154}		491—686 {50—70, 110—154}	
		Limit	392 {40, 88}		294 {30, 66}	
	P/S	New	589—784 {60—80, 132—176}		540—686 {55—70, 121—154}	
		Used	491—686 {50—70, 110—154}		393—539 {40—55, 88—121}	
		Limit	392 {40, 88}		343 {35, 77}	
	P/S+A/C	New	687—882 {70—90, 154—198}		—	
		Used	491—686 {50—70, 110—154}		—	
		Limit	441 {45, 99}		—	
	Generator + A/C	New	—		687—882 {70—90, 154—198}	
		Used	—		491—686 {50—70, 110—154}	
		Limit	—		294 {30, 66}	
Valve clearance [Engine cold] (mm {in})	IN		0.225—0.295 {0.0089—0.0116} (0.26 ± 0.035 {0.010 ± 0.0014})		0.245—0.315 {0.0097—0.0124} (0.28 ± 0.035 {0.011 ± 0.0014})	
	EX		0.225—0.295 {0.0089—0.0116} (0.26 ± 0.035 {0.010 ± 0.0014})		0.265—0.335 {0.0105—0.0131} (0.30 ± 0.035 {0.012 ± 0.0014})	
Compression pressure (kPa {kgf/cm^2, psi}) [rpm]	Standard		1177 {12.0, 171} [300]		1393 {14.2, 202} [250]	
	Minimum		824 {8.4, 119} [300]		971 {9.9, 141} [250]	
	Maximum difference between cylinders		196 kPa {2.0 kgf/cm^2, 28 psi}			

Item				Engine			
				FS		KL	
				MTX	ATX	MTX	ATX
Tensioner spring free length			(mm {in})	36.6 {1.44}		—	
Timing belt auto tensioner projection			(mm {in})	—		Type A: 14.3—15.1 {0.563—0.594} Type B: 12.0—13.0 {0.473—0.511}	
Pushing distance of the camshaft oil seal			(mm {in})	0.3—0.7 {0.012—0.027} (from the edge of the cylinder head)		0—0.5 {0—0.019} (from the edge of the cylinder head)	
Pushing distance of the front oil seal			(mm {in})	0—0.5 {0—0.019} (from the edge of the oil pump body)		0—0.7 {0—0.027} (from the edge of the oil pump body)	
Pushing distance of the rear oil seal			(mm {in})	0—0.5 {0—0.019} (from the edge of the rear cover)		0—0.7 {0—0.027} (from the edge of the cylinder block)	
Cylinder head bolt length		Standard	(mm {in})	104.2—104.8 {4.103—4.125}		131.2—131.8 {5.166—5.188}	
		Maximum		105.5 {4.154}		132.5 {5.217}	
Idle speed			(rpm)	550—850	500—800	550—750	
Ignition timing			(BTDC/rpm)	6—18°/ 550—850	6—18°/ 500—800	4—16°/550—750	
Idle-up speed*1		E/L ON*2	(rpm)	625—925	525—825	550—750	
		A/C ON*3		625—925	500—800	725—925	
		P/S ON*4		550—850	500—800	550—750	
Idle mixture		HC concentration		within the regulation			
		CO concentration		within the regulation			
LUBRICATION SYSTEM							
Oil pressure			(kPa {kgf/cm^2, psi}) [3000 rpm]	393—490 {4.0—5.0, 57—71}		334—490 {3.4—5.0, 49—71}	
Oil capacity	Total (dry engine)		(L {US qt, Imp qt})	3.7 {3.9, 3.3}		4.9 {5.2, 4.3}	
	Oil replacement		(L {US qt, Imp qt})	3.3 {3.5, 2.9}		3.7 {3.9, 3.3}	
	Oil and oil filter replacement		(L {US qt, Imp qt})	3.5 {3.7, 3.1}		4.0 {4.2, 3.5}	
Engine oil				API Service SG (Energy Conserving II), SH (Energy Conserving II), SJ or ILSAC (GF-I, GF-II)			
Viscosity	Above –25 °C {–13 °F}			SAE 10W–30			
	Below 0 °C {32 °F}			SAE 5W–30			
COOLING SYSTEM							
Coolant capacity			(L {US qt, Imp qt})	7.5 {7.9, 6.6}			
Radiator cap valve opening pressure			(kPa {kgf/cm^2, psi})	94—122 {0.95—1.25, 13.5—17.7}			
Thermostat	Initial-opening temperature		(°C {°F})	80—84 {176—183}			
	Full-opening temperature		(°C {°F})	95 {203}			
	Full-open lift		(mm {in})	8.5 {0.33} min.			
Cooling fan motor current			(A)	6.0—9.0			
FUEL SYSTEM							
Fuel line hold pressure			(kPa {kgf/cm^2, psi})	More than 343 {3.50, 49.8}		More than 147 {1.50, 21.3}	
Fuel pump maximum pressure			(kPa {kgf/cm^2, psi})	480—630 {4.8—6.5, 69—92}			
Fuel injector	Leakage			Less than 1 drop/2 minutes			
	Volume		(ml {cc, floz}/15 sec.)	47—68 {47—68, 1.4—2.0}		48—56 {48—56, 1.7—1.8}	
	Resistance		(Ω)	12—16 [at 20 °C {68 °F}]			

Item					Engine			
					FS		KL	
					MTX	ATX	MTX	ATX
Pressure regulator kPa {kgf/cm^2, psi}	PRC solenoid valve ON*5				210—260 {2.1—2.7, 30—38}		210—250 {2.1—2.6, 30—36}	
	PRC solenoid valve OFF				260—320 {2.6—3.3, 37—46}		270—310 {2.7—3.2, 39—45}	
CHARGING SYSTEM								
Battery	Electrolyte gravity				1.275—1.295 [20 °C {68 °F}]			
	Dark current*6 (mA)				Max. 20			
	Test load chart (A)	Battery type	GROUP 36R		240			
	Slow charge (A)	Battery type (5-hour rate)	GROUP 36R (48)		4.5—5.5			
	Quick charge (A/30 min)	Battery type (5-hour rate)	GROUP 36R (48)		30			
Generator	Rotor resistance (Between slip rings) (Ω)				2.5—2.9 [20 °C {68 °F}]		2.8—3.2 [20 °C {68 °F}]	
	Brush length	Standard (mm {in})			18.5 {0.73}			
		Minimum (mm {in})			5.0 {0.20}			
	Brush spring force	Standard (N {kgf, lbf})			5.2 {0.53, 1.17}			
		Minimum (N {kgf, lbf})			2.7 {0.28, 0.62}			
	Standard voltage (V)	Ignition switch ON	Terminal	B	B+			
				L	Approx. 1			
				S	B+			
		Idle [20 °C {68 °F}]	Terminal	B	14.1—14.7			
				L	13.2—13.8			
				S	14.1—14.7			
	Generated current (Reference) (A)	Engine speed (rpm)	1000	Terminal B current	Approx. 58 or below (must not be 0)		Approx. 70 or below (must not be 0)	
			2000	Terminal B current	Approx. 77 or below (must not be 0)		Approx. 90 or below (must not be 0)	
IGNITION SYSTEM								
Ignition coil	Resistance [20 °C {68 °F}]	Primary coil (Ω)			0.45—0.55			
		Secondary coil (kΩ)			11.5—15.5			
High-tension lead	Resistance (kΩ/m)				16 [20 °C {68 °F}]			
Spark plug	Type	NGK			BKR5E-11*7, BKR6E-11		—	
		DENSO			K16PR-U11*7, K20PR-U11		PKJ16CR8*7, PKJ20CR8	
	Plug gap (mm {in})				1.0—1.1 {0.040—0.043}		0.7—0.8 {0.028—0.031}	
	Resistance (kΩ)				3.0—7.5 [20 °C {68 °F}]			
	Tightening torque (N·m {kgf·m, ft·lbf})				15—22 {1.5—2.3, 11—16}			
STARTING SYSTEM								
Starter	Commutator diameter	Standard (mm {in})			29.4 {1.16}		29.2 {1.15}	
		Minimum (mm {in})			28.8 {1.14}		28.6 {1.13}	
	Brush length	Standard (mm {in})			16.5 {0.65}			
		Minimum (mm {in})			7.0 {0.28}			
	Brush spring force	Standard (N {kgf, lbf})			20.6 {2.10, 4.62}			
		Minimum (N {kgf, lbf})			6.87 {0.70, 1.54}			
	Pinion gap (mm {in})				0.5—2.0 {0.020—0.078}		0 {0}	
	No load test	Voltage (V)			11			
		Current (A)			Below 90			

*1 : Excludes temporary idle speed drop just after the loads (E/L, A/C, P/S) are turned on.

*2 : Headlight, fan switch (3rd or higher) and cooling fan are turned on.
*3 : A/C switch and fan switch are tuned on.
*4 : Steering wheel fully turned.
*5 : Hot condition at the staring.
*6 : Dark current is the constant flow of current present (for the audio unit, clock, PCM, etc.) when the ignition switch is at OFF and with the ignition key removed.
*7 : Standard plug.

01–60 SPECIAL TOOLS

01 ENGINE SST 01–60–1

01 ENGINE SST

W6U160W01

49 9200 020A V-ribbed belt tension gauge  T9200020A	49 T012 0A0A Tappet holder set 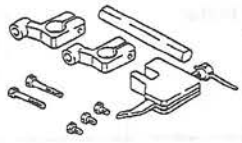 TT0120A0A	49 S120 710 Coupling flange holder  TS120710X
49 E011 1A1 Holder set 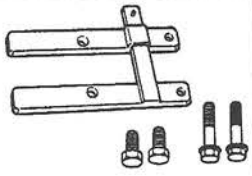 TE0111A1X	49 G011 103 Bolts <FS> 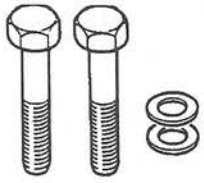 TG011103X	49 B014 001 Oil seal installer <FS>  TB014001X
49 H010 401 Oil seal installer  TH010401X	49 G033 107A Dust cover installer <FS> 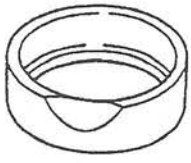 TG033107A	49 P005 204 Oil seal installer <KL>  TP005204X
49 G019 017 Oil seal installer <KL>  TG019017X	49 0187 280 Oil pressure gauge 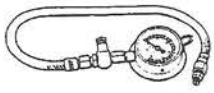 T0187280X	49 G014 001 Oil filter wrench  TG014001X
49 9200 145 Radiator cap tester adapter set  T9200145X	49 L018 901 Injector checker <FS> 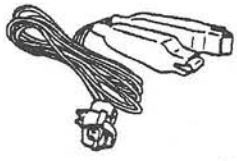 TL018901X	49 UN01 130 104 Pin breakout box 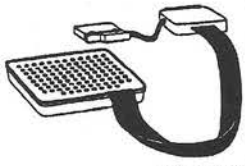 TUN01130X
49 T088 0A0 NGS set  TT0880A0X	49 T088 010E Program card  TT088010E	49 T088 002 Vehicle interface module (Part of 49 T088 0A0) 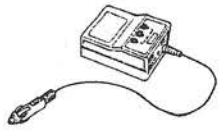 TT088002X
49 T088 001 Control unit (Part of 49 T088 0A0) 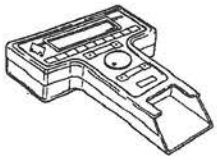 TT088001X	49 T088 004 NGS OBDII adapter (Part of 49 T088 0A0) 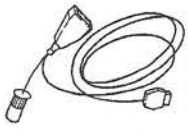 TT088004X	49 T088 006 Battery hookup adapter (Part of 49 T088 0A0)  TT088006X

49 E018 9A0 Injector checker set <KL> 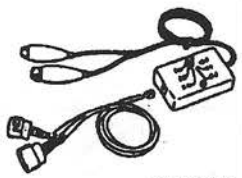 TE0189A0X	49 H018 001 Knock sensor wrench 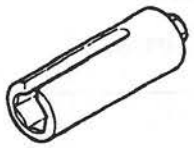 TH018001X	49 H010 103 Compression gauge  TH010103X
49 H010 104 Adaptor  TH010104X	49 U014 001 Air pressure tester 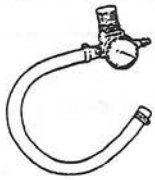 TU014001X	—

SUSPENSION

02
SECTION

GENERAL PROCEDURES 02–10
WHEEL ALIGNMENT 02–11
FRONT SUSPENSION 02–13
REAR SUSPENSION 02–14
TECHNICAL DATA 02–50
SERVICE TOOLS 02–60

02–10 GENERAL PROCEDURES

PRECAUTION (SUSPENSION) 02–10–1

PRECAUTION (SUSPENSION)

W6U210W01

Wheels and tires removal/installation
- The removal and installation procedures for the wheels and tires are not mentioned in this section. When a wheel is removed, retighten it to **90—110 N·m {9—12 kgf·m, 66—86 ft·lbf}**.

Suspension links removal/installation
- Tighten any part of the suspension that uses rubber bushings only after the vehicle has been lowered and unloaded.

Note
- Unloaded ... Fuel tank full; engine coolant and engine oil at specified levels; spare tire, jack and tools in designated position.

Power steering components removal/installation
- If any power steering fluid line has been disconnected anytime during the procedure, add ATF M-III or equivalent (e.g. Dexron®II), bleed the fluid line, and inspect for leakage after the procedure has been completed.

02–11 WHEEL ALIGNMENT

WHEEL ALIGNMENT PREINSPECTION . 02–11–1
FRONT WHEEL ALIGNMENT 02–11–1
Specifications (Unloaded)*1 ..... **02–11–1**
Maximum Steering Angle Adjustment . **02–11–1**
Camber and Caster Adjustment **02–11–2**
Total Toe-in Adjustment **02–11–2**
REAR WHEEL ALIGNMENT 02–11–2
Specifications (Unloaded)*1 ..... **02–11–2**
Total Toe-in Adjustment **02–11–2**

WHEEL ALIGNMENT PREINSPECTION

W6U211W01

1. Inspect the tire inflations, and adjust to the recommended pressure as necessary.
2. Inspect the front wheel bearing play and correct it if necessary. (Refer to 03–11 WHEEL HUB, STEERING KNUCKLE PREINSPECTION, Wheel Bearing Play Inspection.)
3. Inspect the wheel and tire runouts.
4. Inspect the ball joints and steering linkage for excessive looseness.
5. Shake the vehicle to settle the suspension.
6. The vehicle must be on level ground and unloaded.

Note
- Unloaded...Fuel tank full; engine coolant and engine oil at specified levels; spare tire, jack and tools in designated position.

7. Measure the height from the center of the wheel to the fender brim. The difference between the left and right measurement must not exceed **10 mm {0.39 in}**.

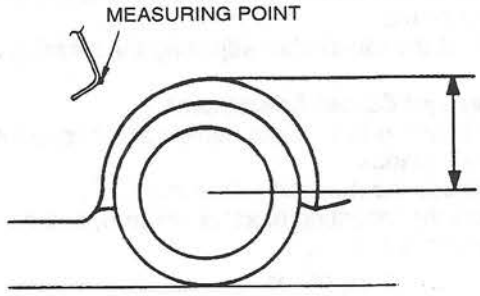

W6U211WA0

FRONT WHEEL ALIGNMENT

W6U211W02

Specifications (Unloaded)*1

Fuel gauge indication		Empty	1/4	1/2	3/4	Full
Maximum steering angle	Inner	37° ± 3°				
	Outer	32° ± 3°				
Total toe-in	(mm {in})	3 ± 4 {0.12 ± 0.16}				
	Degree	0°17' ± 0°23'				
Camber angle*2		−0°42' ± 1°			−0°43' ± 1°	
Caster angle*2	14 inch wheel	2°12' ± 1°		2°11' ± 1°		2°10' ± 1°
	15 inch wheel	2°13' ± 1°		2°12' ± 1°		2°11' ± 1°
SAI*3 (reference value)		15°02'				

*1 : Engine coolant and engine oil at specified level; spare tire, jack, and tools in designated position. Adjust to the median when carrying out wheel alignment.
*2 : Difference between left and right must not exceed 1.5°
*3 : SAI: Steering axis inclination

Maximum Steering Angle Adjustment

1. Loosen the tie-rod end locknuts.
2. Remove the steering gear boot clamp.
3. Turn the tie rods to equalize the length L.

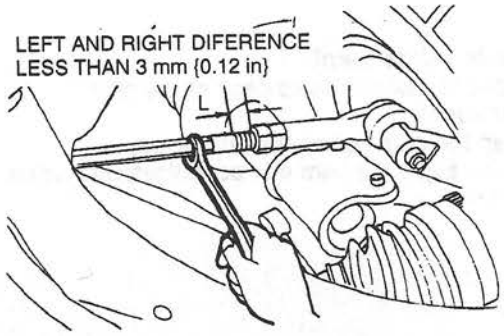

W6U211WA1

Maximum left/right difference
3 mm {0.12 in}

Note
- Turn the tie rods equally.

4. Turn the tie rod to provide the correct maximum steering angle.
5. Tighten the tie-rod end locknuts.

Tightening torque
69—98 N·m
{7.0—10.0 kgf·m, 50.7—72.3 ft·lbf}

6. Verify that the boot is not twisted, and install the boot clamp.
7. Adjust the toe-in after adjusting the steering angle.

Camber and Caster Adjustment
1. Jack up the front of the vehicle and support it on safety stands.
2. Remove the mounting block nuts.
3. Push the mounting block downward, and turn it to the desired position.

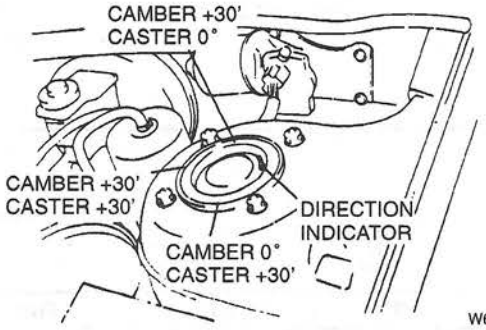

W6U211WA2

4. Install and tighten the mounting nuts to the specified torque.

Tightening torque
47—62 N·m {4.7—6.4 kgf·m, 33—46 ft·lbf}

Total Toe-in Adjustment
1. Adjust the steering angle.
2. Remove the steering gear boot clamp.
3. Loosen the left and right tie rod locknuts and turn the tie rods equally. Both tie rods are right threaded, so turning the right tie rod toward the front of the vehicle and the left toward the rear increases toe-in.

Note
- Turning both tie rods one complete turn changes toe-in by **about 6 mm {0.24 in} (0°36').**

4. Tighten the tie rod locknuts to the specified torque.

Tightening torque
69—98 N·m
{7.0—10.0 kgf·m, 50.7—72.3 ft·lbf}

5. Verify that the boot is not twisted, and install the boot clamp.

REAR WHEEL ALIGNMENT

W6U211W03

Specifications (Unloaded)*1

Fuel gauge indication		Empty	1/4	1/2	3/4	Full
Total toe-in	(mm {in})	3 ± 4 {0.12 ± 0.16}				
	Degree	0°20' ± 0°23'			0°17' ± 0°23'	
Camber angle*2 (reference value)		0°03' ± 1°	0°01' ± 1°	–0°02' ± 1°	–0°04' ± 1°	–0°06' ± 1°
Thrust angle (reference value)		0° ± 0°48'				

*1 : Engine coolant and engine oil at specified level; spare tire, jack, and tools in designated position. Adjust to the median when carrying out wheel alignment.
*2 : Difference between left and right must not exceed 1.5°.

Total Toe-in Adjustment
1. Remove the access hole caps of the rear crossmember.
2. Loosen the cam nut on the lateral link.
3. Turn the adjusting cam bolt as indicated to adjust the toe-in.

	Left wheel	Right wheel
Toe-in direction	Counterclockwise	Clockwise
Toe-out direction	Clockwise	Counterclockwise

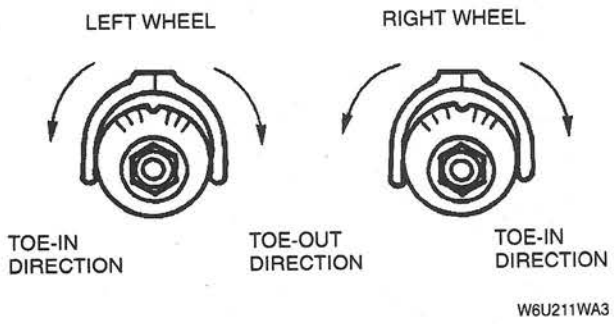

Note

- Turning the adjusting cam bolt one graduation changes the toe-in **about 3.2 mm {0.13 in} (0°18')**.

4. Tighten the cam nut.

Tightening torque
87—116 N·m
{8.8—11.9 kgf·m, 63.7—86.0 ft·lbf}

5. Install the caps.

02–13 FRONT SUSPENSION

FRONT SHOCK ABSORBER AND COIL SPRING REMOVAL/INSTALLATION 02–13–1
Piston Rod Nut Removal Note 02–13–2
Coil Spring Installation Note 02–13–2
Front Shock Absorber and Coil Spring Installation Note 02–13–3
FRONT SHOCK ABSORBER INSPECTION 02–13–3
FRONT SHOCK ABSORBER DISPOSAL 02–13–3
FRONT LOWER ARM REMOVAL/INSTALLATION 02–13–4
Dust Boot Installation Note 02–13–4
Lower Arm Bushing (Front) Removal Note 02–13–4
Lower Arm Bushing (Front) Installation Note 02–13–5
Dust Boot Installation Note 02–13–5
FRONT LOWER ARM INSPECTION ... 02–13–5
FRONT STABILIZER REMOVAL/INSTALLATION 02–13–6
Stabilizer Bushing and Bracket Installation Note 02–13–6
STABILIZER CONTROL LINK INSPECTION 02–13–6
TRANSVERSE MEMBER AND FRONT CROSSMEMBER REMOVAL/INSTALLATION 02–13–7
Crossmember and Steering Gear Component Removal Note 02–13–8

02

FRONT SHOCK ABSORBER AND COIL SPRING REMOVAL/INSTALLATION

W6U213W01

1. Remove in the order indicated in the table.
2. Install in the reverse order of removal.
3. Inspect the front wheel alignment and adjust it as necessary.

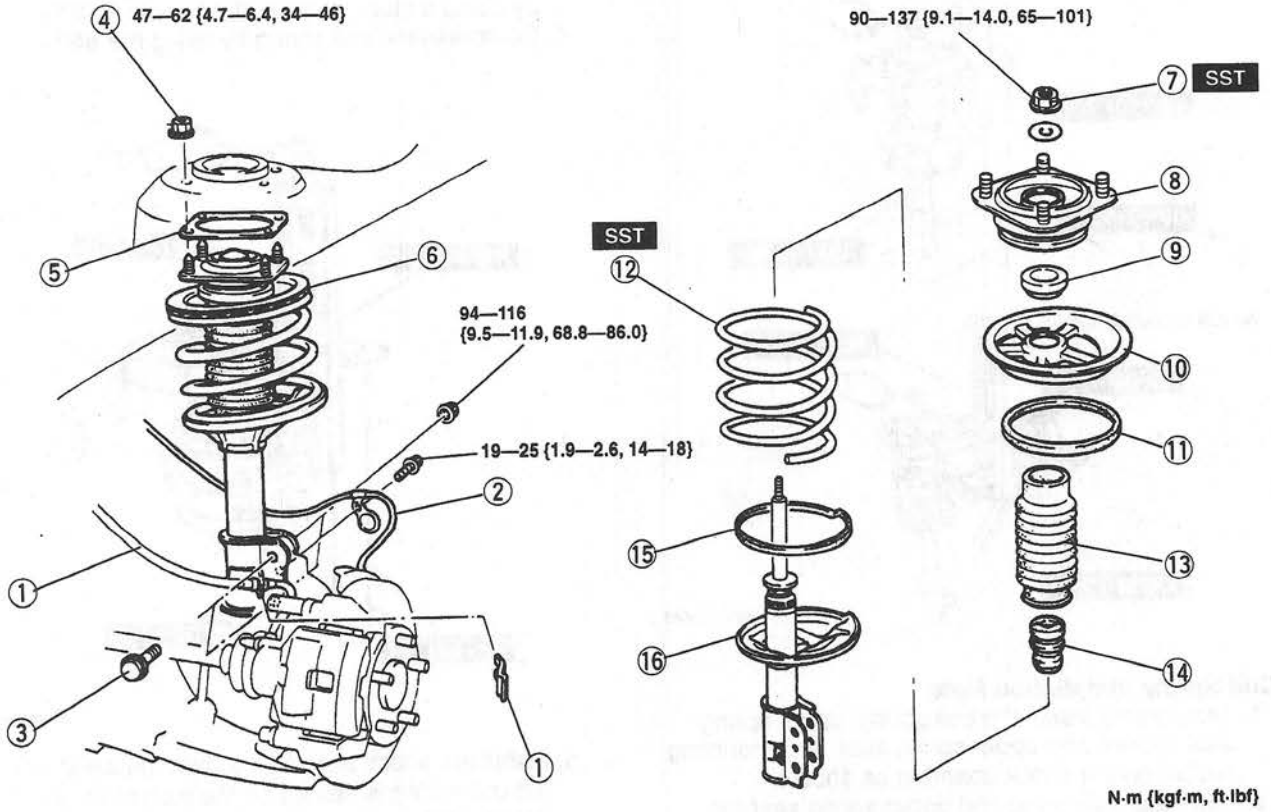

W6U213WA0

1	Clip and brake hose
2	ABS wheel-speed sensor harness (if equipped)
3	Shock absorber bolt
4	Nut
5	Sheet

6	Front shock absorber and coil spring ☞ Installation Note
7	Piston rod nut ☞ Removal Note
8	Mounting rubber
9	Thrust bearing

10	Upper spring seat
11	Upper spring seat rubber
12	Coil spring ☞ Installation Note
13	Dust cover
14	Bound stopper
15	Lower spring seat rubber
16	Shock absorber

Piston Rod Nut Removal Note

Warning

- **Removing the piston rod nut is dangerous. The shock absorber and spring could fly off under tremendous pressure and cause serious injury or death. Secure the shock absorber in the SSTs before removing the coil spring nut.**

1. Protect the coil spring by using a piece of cloth, then set the **SSTs**.
2. Compress the coil spring by using the **SSTs**, and remove the piston rod nut.

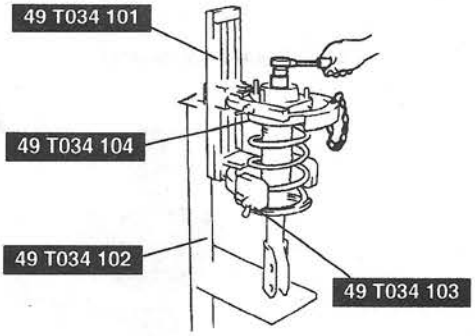

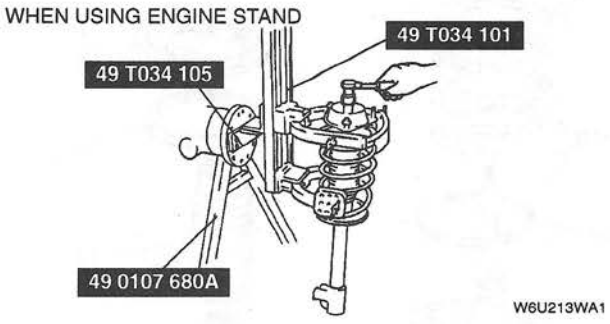

W6U213WA1

Coil Spring Installation Note

1. Temporarily install the coil spring, upper spring seat rubber, and upper spring seat, and mounting rubber on the shock absorber as shown.
2. Mark the coil spring and upper spring seat for proper installation.

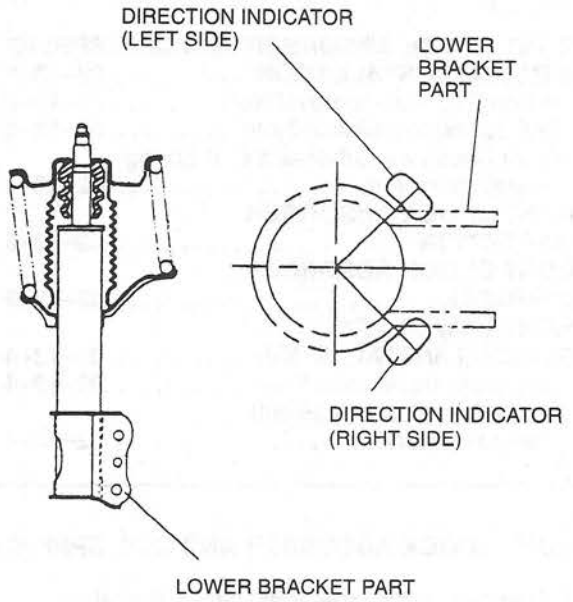

W6U213WA2

3. Align the marks of the coil spring and upper spring seat. Protect the coil spring and upper seat spring by using a piece of cloth, then set the **SSTs**.
4. Compress the coil spring by using the **SSTs**.

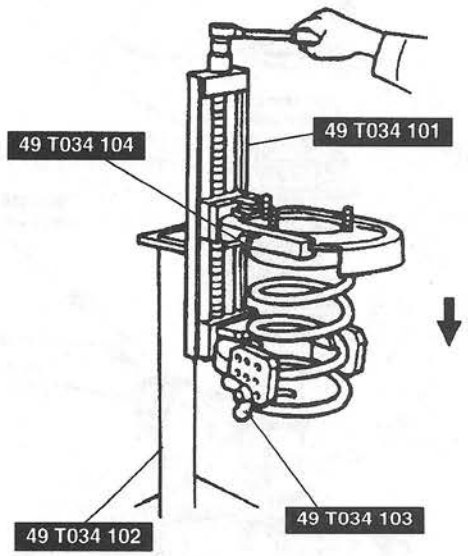

W6U213WA3

5. Install the shock absorber so that the lower end of the coil spring is seated on the step of the lower spring seat.
6. Make sure that the marks on the shock absorber and upper spring seat are aligned.
7. Install the thrust bearing, mounting rubber, and piston rod nut, then remove the **SSTs**.

Piston rod nut tightening torque
90—137 N·m {9.1—14.0 kgf·m, 66—101 ft·lbf}

Front Shock Absorber and Coil Spring
Installation Note

- Face the mounting block direction indicator toward the rear outboard position, and install the shock absorber.

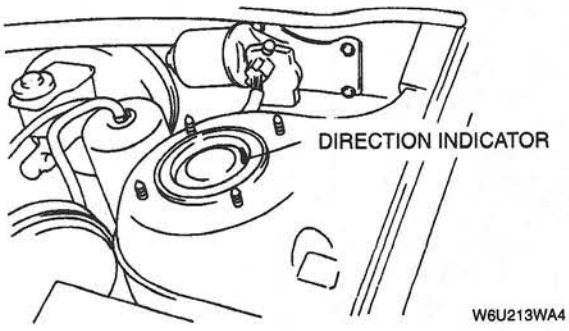

W6U213WA4

FRONT SHOCK ABSORBER INSPECTION

W6U213W02

1. Remove the front shock absorber from the vehicle.
2. Inspect for damage and oil leakage.
3. Inspect the rubber bushing for deterioration and wear.
4. Compress and extend the shock piston at least three times. Verify that the operational force does not change and that there is no unusual noise.
   (1) Compress the shock absorber piston and release it.
   (2) Verify that the piston extends fully at a normal speed.
5. Replace the shock absorber as necessary.

FRONT SHOCK ABSORBER DISPOSAL

W6U213W03

Warning

- **The gas in the shock absorber is pressurized, and could spray metal chips into the eyes and face when drilling. Whenever drilling into a shock absorber, wear protective eye wear.**

1. Clamp a shock absorber flat or with the piston downwards.
2. Drill a **2—3 mm {0.08—0.11 in}** hole at a point of **20—30 mm {0.8—1.1 in}** from the bottom of the tube, so that the gas can escape.

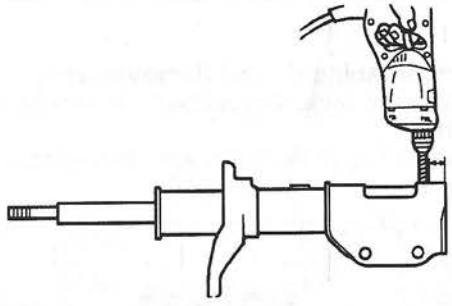

W6U213WA5

3. Turn the hole downwards.
4. The oil can be collected by moving the piston rod several times up and down and cutting the tube at the end.
5. Dispose of waste oil according to the waste disposal law.

Note

- Shock absorber gas is nitrogen gas.
- Shock absorber oil is mineral oil.

FRONT LOWER ARM REMOVAL/INSTALLATION

W6U213W04

1. Remove in the order indicated in the table.
2. Install in the reverse order of removal.

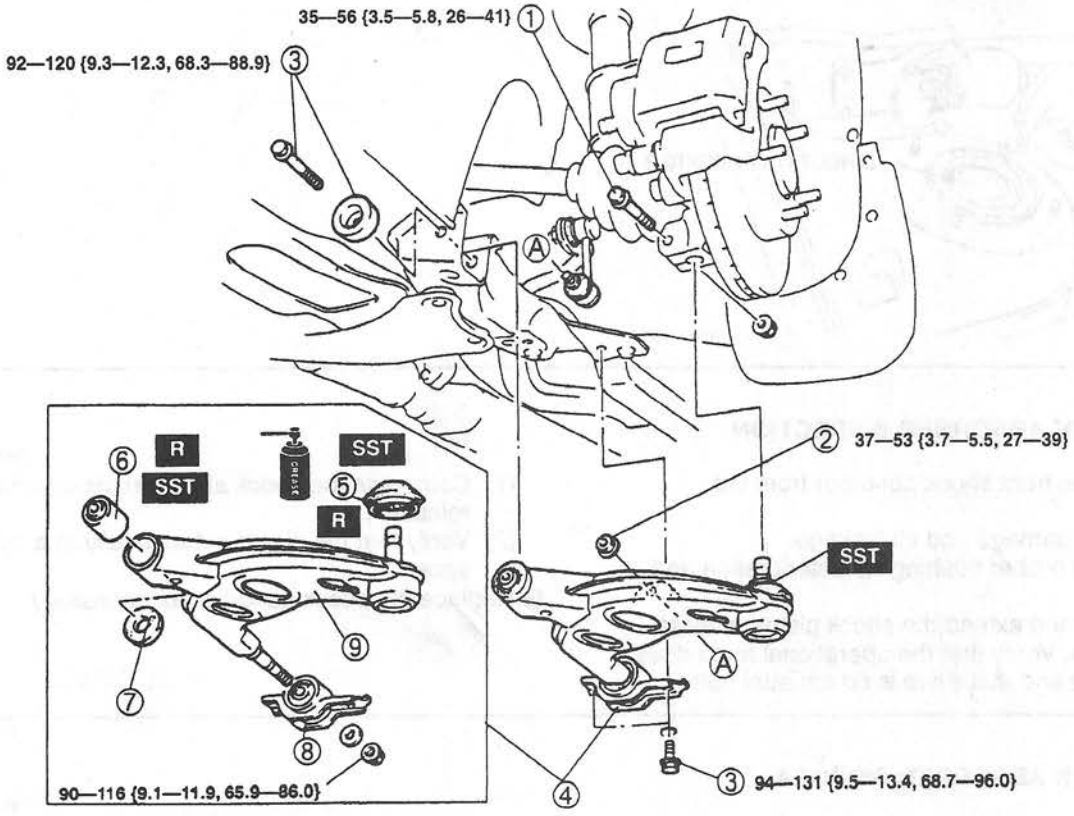

N·m {kgf·m, ft·lbf}

W6U213WA6

1	Bolt (Lower arm ball joint)
2	Nut (Stabilizer control link)
3	Bolt and dynamic damper
4	Lower arm component
5	Dust boot ☞ Removal Note ☞ Installation Note
6	Lower arm bushing (front) ☞ Removal Note ☞ Installation Note
7	Stopper
8	Lower arm bushing (rear)
9	Lower arm

Dust Boot Installation Note

- Remove the dust boot by using a chisel, being careful not to damage the ball joint and the arm.

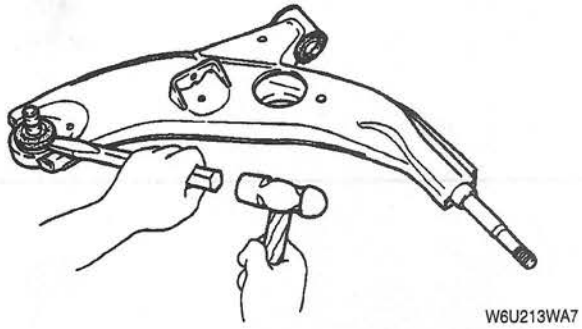

W6U213WA7

Lower Arm Bushing (Front) Removal Note

1. Cut away the projecting rubber of the lower arm bushing.
2. Set the **SST** onto the lower arm, and remove the bushing.

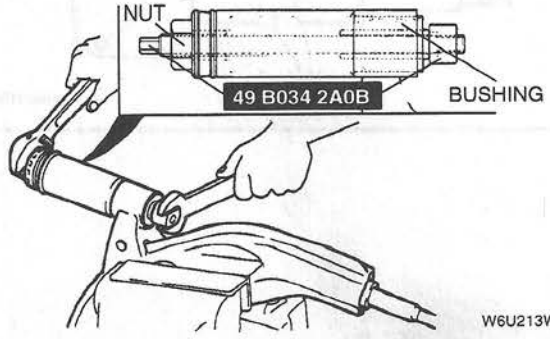

W6U213WA8

Lower Arm Bushing (Front) Installation Note

- Install the new bushing, and pull it into the lower arm by using the **SST**.

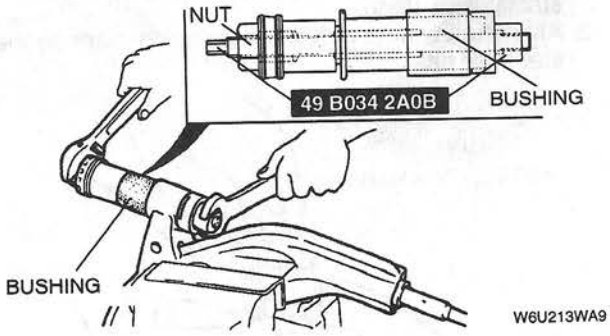

W6U213WA9

2. Fill the inside of the new dust boot with grease.
3. Press the boot onto the ball joint by using the **SST**.
4. Wipe away the excessive grease.

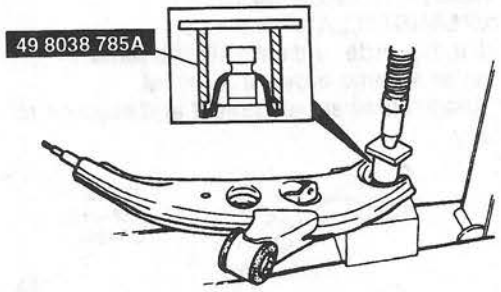

W6U213WAH

Dust Boot Installation Note

1. Wipe the grease off the ball stud.

FRONT LOWER ARM INSPECTION

W6U213W05

1. Remove the lower arm from the vehicle.
2. Inspect for damage, cracks, and bending.
3. Inspect the ball joint rotation torque.
   (1) Rotate the ball joint five times.
   (2) Connect the **SST** to the ball stud, and measure the rotation torque by using a pull scale.
   (3) Replace it if not within the specification.

Ball joint preload
1.0—4.9 N·m {10—50 kgf·cm, 9—43 in·lbf}
Pull scale reading
9.8—49 N {1.0—5.0 kgf, 3—11 lbf}

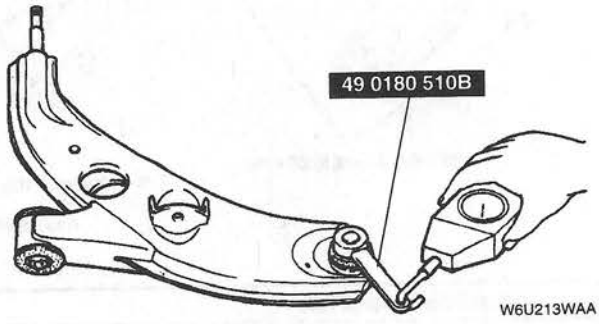

W6U213WAA

FRONT STABILIZER REMOVAL/INSTALLATION

1. Remove the crossmember and steering gear component. (Refer to TRANSVERSE MEMBER AND FRONT CROSSMEMBER REMOVAL/INSTALLATION.)
2. Remove in the order indicated in the table.
3. Install in the reverse order of removal.
4. Inspect the front wheel alignment and adjust it as necessary.

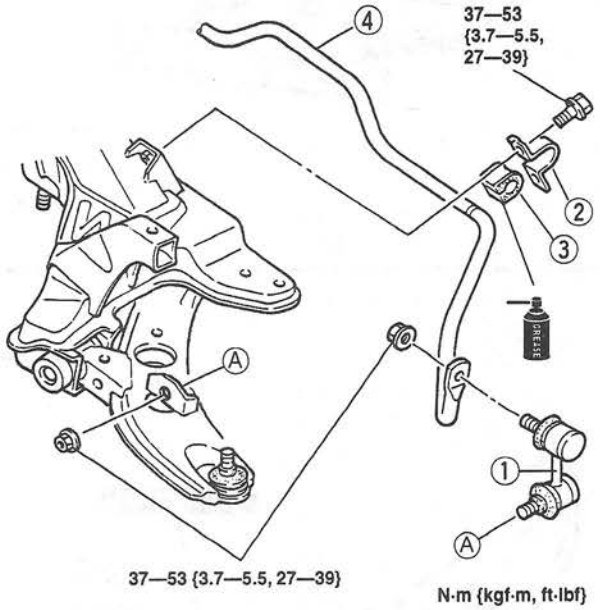

W6U213WAB

1	Stabilizer control link
2	Stabilizer bracket ☞ Installation Note
3	Stabilizer bushing ☞ Installation Note
4	Front stabilizer

W6U213W06

Stabilizer Bushing and Bracket Installation Note

1. Apply rubber grease to the inside surface of the stabilizer bushing.
2. Align the bushing with the installation mark on the stabilizer bar.

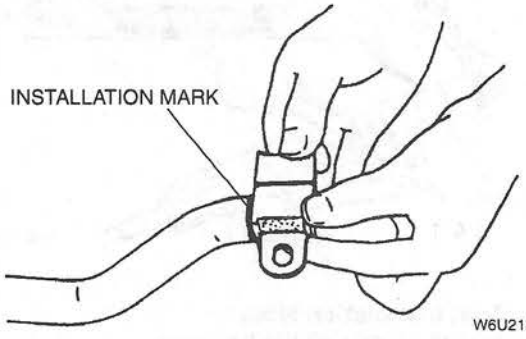

W6U213WAC

3. Install the stabilizer bracket in the direction shown.

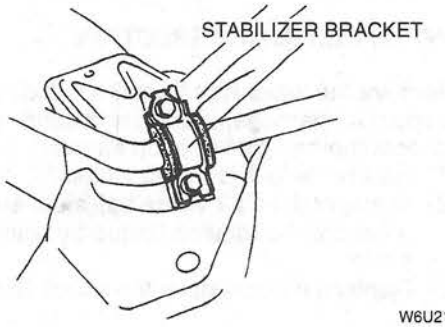

W6U213WAD

STABILIZER CONTROL LINK INSPECTION

1. Remove the stabilizer control link from the vehicle.
2. Inspect for bending and damage.
3. Measure the ball joint starting torque.
   (1) Rock the ball joint stud side to side 10 times.
   (2) Rotate the ball joint stud 10 times.
   (3) Measure the starting torque by using a suitable Allen socket and a torque wrench.
   (4) Replace it if not within the specification.

Starting torque
0.2—1.5 N·m {2.0—15 kgf·cm, 2—13 in·lbf}

W6U213W07

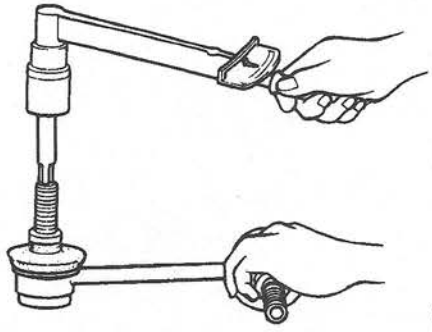

W6U213WAE

TRANSVERSE MEMBER AND FRONT CROSSMEMBER REMOVAL/INSTALLATION

W6U213W08

1. Remove the front exhaust pipe. (Refer to 01–15A EXHAUST SYSTEM REMOVAL/INSTALLATION [FS].) (Refer to 01–15B EXHAUST SYSTEM REMOVAL/INSTALLATION [KL].)
2. Remove in the order indicated in the table.
3. Install in the reverse order of removal.
4. Inspect the front wheel alignment and adjust it as necessary.

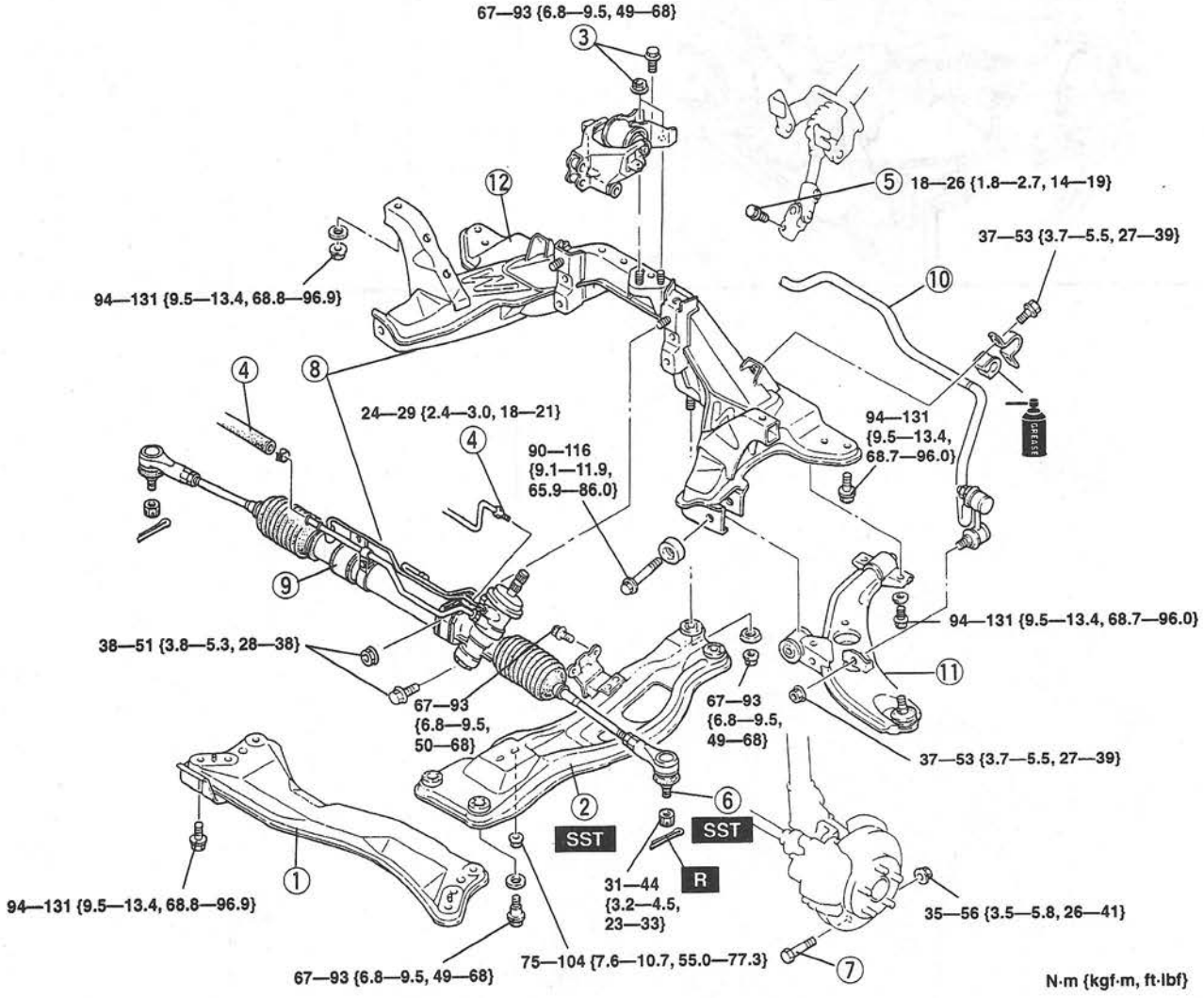

W6U213WAF

1	Transverse member
2	Engine mount member ☞ 05–15 MANUAL TRANSAXLE REMOVAL/INSTALLATION, Engine Mount Member Removal Note ☞ 05–15 MANUAL TRANSAXLE REMOVAL/INSTALLATION Engine Mount Member Installation Note
3	No.1 engine mount nut and bolt
4	Pressure pipe and return hose
5	Intermediate shaft bolt
6	Tie-rod end ball joint ☞ 06–12 STEERING GEAR AND LINKAGE REMOVAL/INSTALLATION, Tie-rod End Ball Joint Removal Note

7	Lower arm ball joint bolt
8	Crossmember and steering gear component ☞ Removal Note
9	Steering gear and linkage
10	Front stabilizer ☞ FRONT STABILIZER REMOVAL/INSTALLATION
11	Front lower arm
12	Front crossmember

Crossmember and Steering Gear Component Removal Note

1. Support the crossmember by using a jack and remove the bolts and nuts.
2. Remove the crossmember and steering gear component.

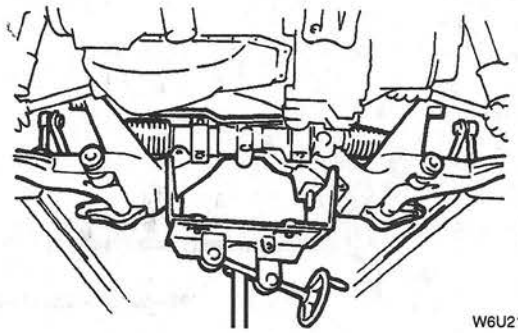

W6U213WAG

02–14 REAR SUSPENSION

REAR SHOCK ABSORBER AND COIL SPRING
REMOVAL/INSTALLATION 02–14–1
Coil Spring Installation Note 02–14–2
REAR SHOCK ABSORBER
INSPECTION 02–14–2
REAR SHOCK ABSORBER DISPOSAL . 02–14–2
REAR STABILIZER
REMOVAL/INSTALLATION 02–14–3
Stabilizer Bushing Installation Note ... 02–14–3
STABILIZER CONTROL LINK
INSPECTION 02–14–3
LATERAL LINK AND TRAILING LINK
REMOVAL/INSTALLATION 02–14–4
Nut, Cam Plate, and Adjusting Cam Bolt
Removal Note 02–14–4
Front Lateral Link Removal Note 02–14–4
Nut, Cam Plate, and Adjusting Cam Bolt
Installation Note 02–14–5
REAR CROSSMEMBER
REMOVAL/INSTALLATION 02–14–5

REAR SHOCK ABSORBER AND COIL SPRING REMOVAL/INSTALLATION

W6U214W01

Note

- During routine inspection, varying degrees of oil wetness may be noticed on the rear shock absorber. If there is a thin oily film or sheen on the top of the shock absorber near the piston, it may be a normal condition, with no ride or handling performance concerns. If this is the case, do not replace the shock absorber. A heavy oil film along with droplets of oil below the lower spring seat is considered an abnormal condition. The shock absorber should be replaced if this condition is detected.

1. Remove the rear package trim. (Refer to 09–17 REAR PACKAGE TRIM REMOVAL/INSTALLATION.)
2. Remove in the order indicated in the table.
3. Install in the reverse order of removal.

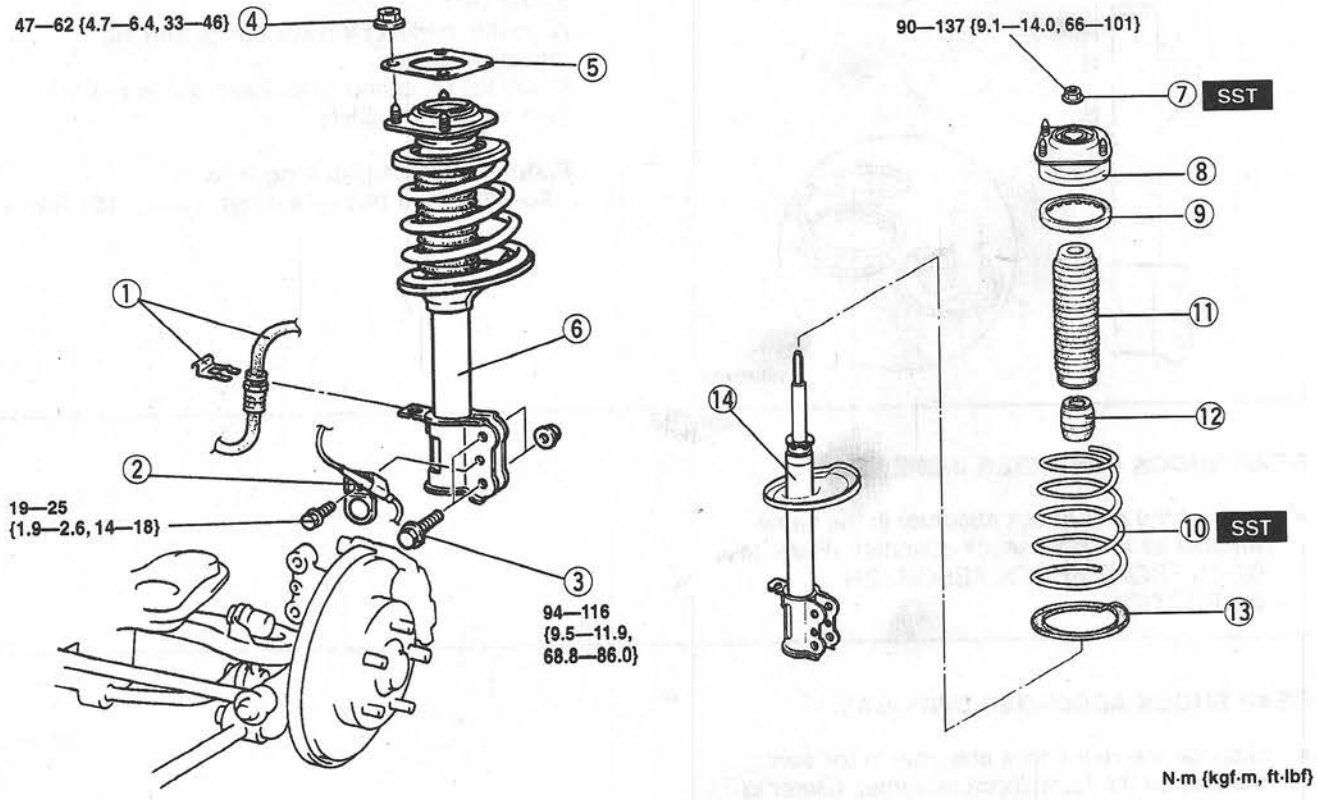

W6U214WA0

1	Clip and brake hose
2	ABS wheel-speed sensor harness (if equipped)
3	Shock absorber bolt

4	Nut
5	Sheet
6	Rear shock absorber and coil spring

7	Piston rod nut ☞ 02–13 FRONT SHOCK ABSORBER REMOVAL/INSTALLATION, Piston Rod Nut Removal Note
8	Mounting rubber
9	Upper spring seat
10	Coil spring ☞ Installation Note
11	Dust cover
12	Bound stopper
13	Lower spring seat
14	Rear shock absorber

Coil Spring Installation Note

1. Temporarily install the coil spring, upper spring seat, and mounting rubber on the shock absorber as shown.
2. Mark the coil spring, upper spring seat, and mounting rubber for proper installation.

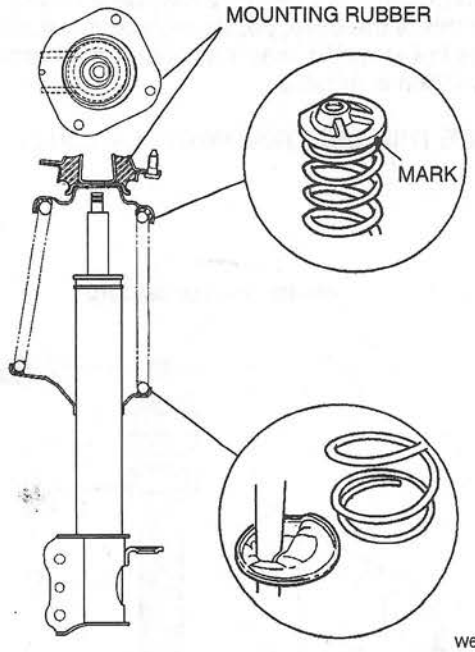

W6U214WA1

3. Align the marks of the coil spring and upper spring seat. Protect the coil spring and upper seat spring by using a piece of cloth, then set the **SSTs**.
4. Compress the coil spring by using the **SSTs**.

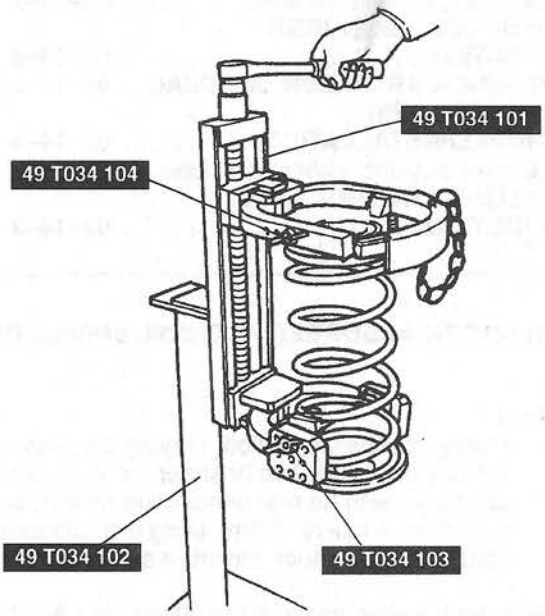

W6U214WA2

5. Install the shock absorber so that the lower end of the coil spring is seated on the step of the lower spring seat.
6. Align the marks of the coil spring and the mounting rubber.
   Install the mounting rubber and piston rod nut, then remove the **SSTs**.

Piston rod nut tightening torque
90—137 N·m {9.1—14.0 kgf·m, 66—101 ft·lbf}

REAR SHOCK ABSORBER INSPECTION

W6U214W02

- Inspect the rear shock absorber in the same manner as the front shock absorber. (Refer to 02–13 FRONT SHOCK ABSORBER INSPECTION.)

REAR SHOCK ABSORBER DISPOSAL

W6U214W03

- Dispose the rear shock absorber in the same manner as the front shock absorber. (Refer to 02–13 FRONT SHOCK ABSORBER DISPOSAL.)

REAR STABILIZER REMOVAL/INSTALLATION

W6U214W04

1. Remove in the order indicated in the table.
2. Install in the reverse order of removal.

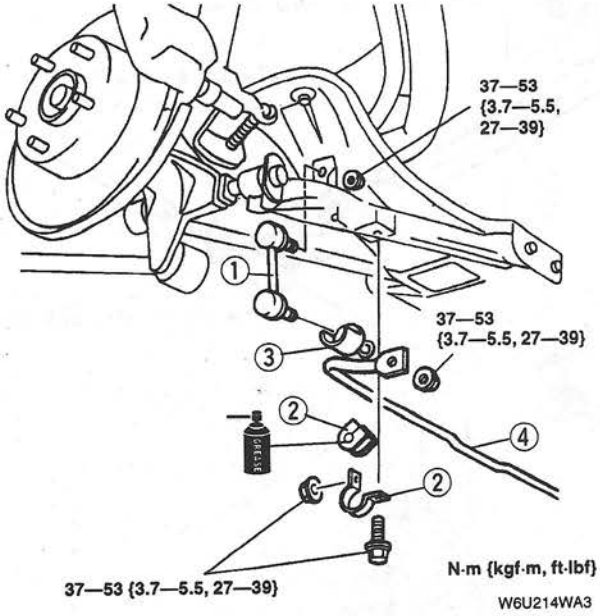

W6U214WA3

1	Stabilizer control link
2	Stabilizer bushing and bracket ☞ Installation Note
3	Protector
4	Rear stabilizer

Stabilizer Bushing Installation Note

- Align the bushing with the installation mark on the stabilizer bar.

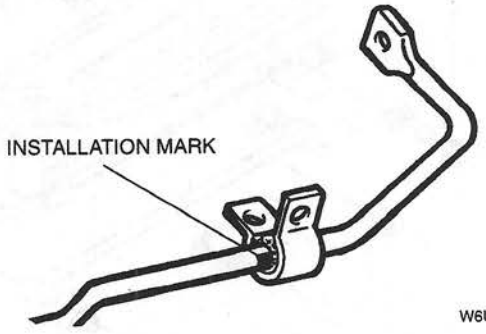

W6U214WA4

STABILIZER CONTROL LINK INSPECTION

W6U214W05

(Refer to 02–13 STABILIZER CONTROL LINK INSPECTION.)

LATERAL LINK AND TRAILING LINK REMOVAL/INSTALLATION

W6U214W06

1. Remove in the order indicated in the table.
2. Install in the reverse order of removal.
3. Inspect the rear wheel alignment and adjust it as necessary.

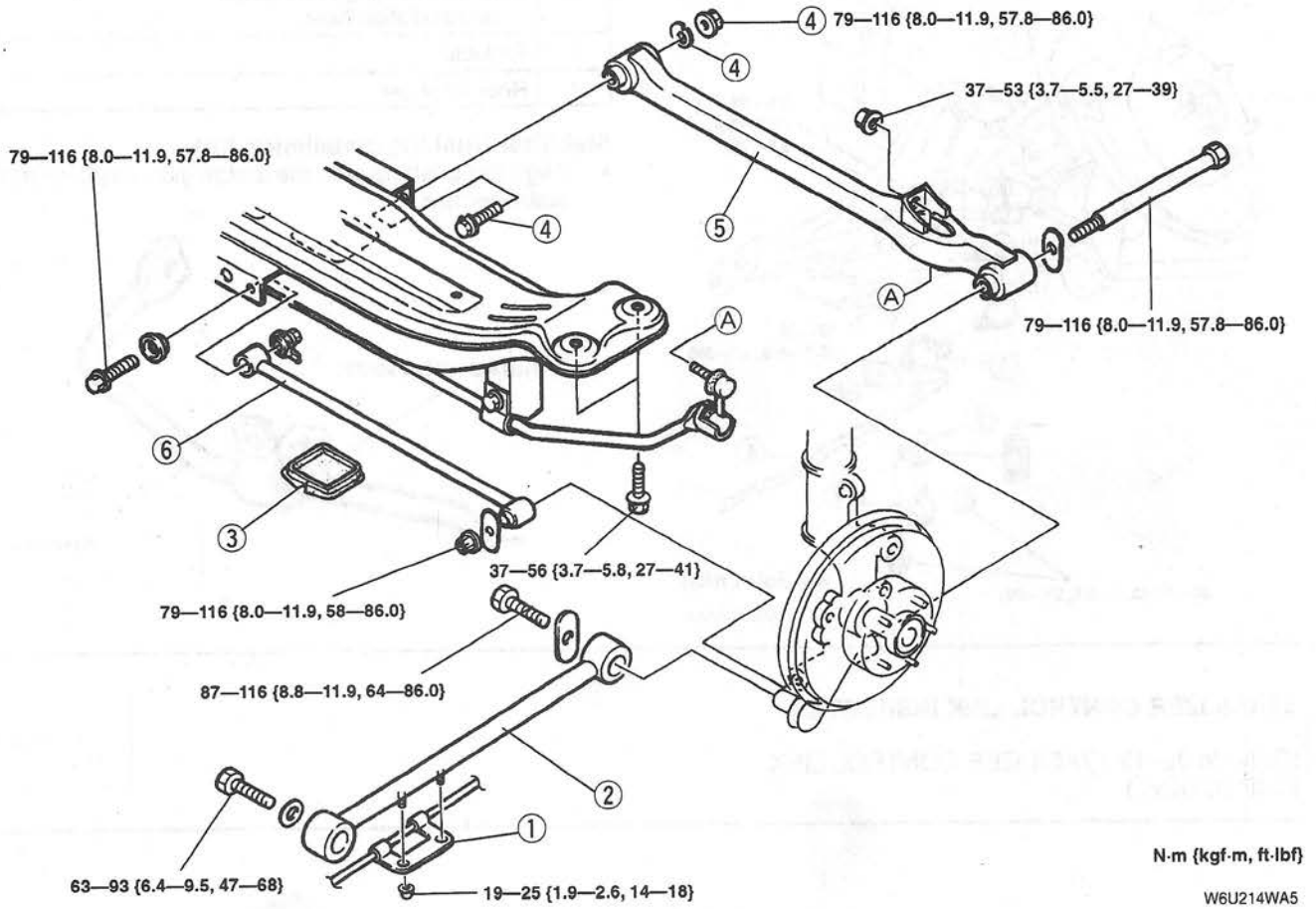

W6U214WA5

1	Parking brake cable bracket
2	Trailing link
3	Cap
4	Nut, cam plate, adjusting cam bolt ☞ Removal Note ☞ Installation Note
5	Rear lateral link
6	Front lateral link ☞ Removal Note

Nut, Cam Plate, and Adjusting Cam Bolt Removal Note

- Before loosening the nut, make a mark on the cam plate and the crossmember for reference during installation.

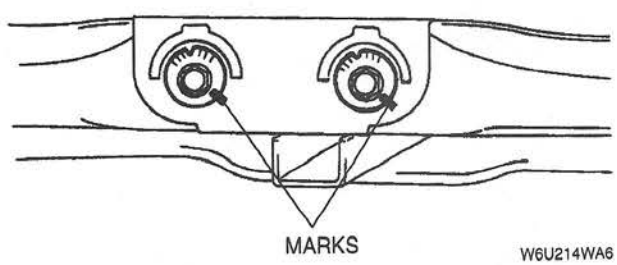

W6U214WA6

Front Lateral Link Removal Note

1. Support the rear crossmember by using a jack, then remove the crossmember bolts.

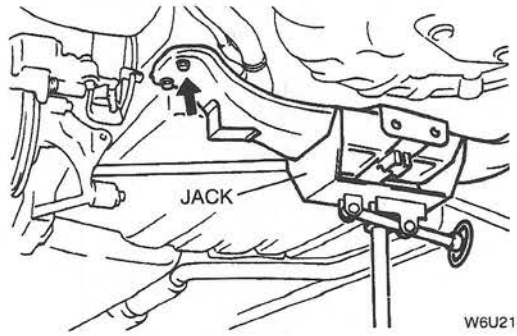

W6U214WA7

2. Lower the crossmember to remove the lateral link bolt.

Nut, Cam Plate, and Adjusting Cam Bolt Installation Note

1. Install the cam plate so that the notch faces the same direction as the adjusting cam bolt.
2. Align the marks made before removing the adjusting cam bolt. Tighten the nut.

Tightening torque
79—116 N·m
{8.0—11.9 kgf·m, 57.8—86.0 ft·lbf}

REAR CROSSMEMBER REMOVAL/INSTALLATION

W6U214W07

1. Remove the rear stabilizer. (Refer to REAR STABILIZER REMOVAL/INSTALLATION.)
2. Remove the front and rear lateral links. (Refer to LATERAL LINK AND TRAILING LINK REMOVAL/INSTALLATION.)
3. Remove the rear crossmember.
4. Install in the reverse order of removal.
5. Inspect the rear wheel alignment and adjust it as necessary.

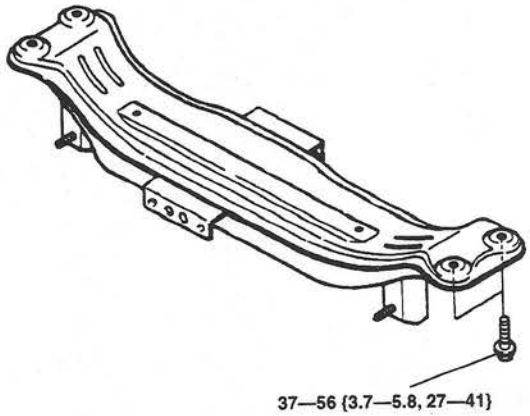

N·m {kgf·m, ft·lbf}

W6U214WA8

02–50 TECHNICAL DATA

02 SUSPENSION 02–50–1

02 SUSPENSION

W6U250W01

Item				Specification	
WHEEL ALIGNMENT					
Front wheel alignment (Unloaded)*1	Maximum steering angle		Inner	37° ± 3°	
			Outer	32° ± 3°	
	Total toe-in		(mm {in})	3 ± 4 {0.12 ± 0.16}	
			(degree)	0°17′ ± 0°23′	
	Camber angle*2			–0°43′ ± 1°	
	Caster angle*2			14 inch wheel: 2°10′ ± 1°, 15 inch wheel: 2°11′ ± 1°	
	Steering axis inclination (Reference value)			15°02′	
Rear wheel alignment (Unloaded)*1	Total toe-in		(mm {in})	3 ± 4 {0.12 ± 0.16}	
			(degree)	0°17′ ± 0°23′	
	Camber angle*2 (Reference value)			–0°06′ ± 1°	
	Thrust angle (Reference value)			0° ± 48′	
WHEELS AND TIRES					
Standard tire wheel	Size			14 × 5 1/2JJ	15 × 6JJ
	Offset		(mm {in})	35 {1.38}	45 {1.77}
	Pitch circle diameter		(mm {in})	114.3 {4.500}	
	Material			Steel	Steel or alluminum alloy
Standard tire	Size			P185/70R14 87S	P205/60R15 90H
	Air pressure		(kPa {kgf/cm^2, psi})	220 {2.2, 32} Front, 180 {1.8, 26} Rear	
	Remaining tread		(mm {in})	1.6 {0.063}	
Standard tire wheel and tire	Wheel and tire runout	Radial direction	(mm {in})	Max. 1.5 {0.06}	
		Lateral direction	(mm {in})	Max. 2.5 {0.10} Steel, Max. 2.0 {0.08} Aluminum	
	Wheel imbalance*3		(g {oz})	Max. 10 {0.35} 14-inch wheel, Max. 9 {0.32} 15-inch wheel	
Temporary spare tire wheel	Size			15 × 4T	
	Offset		(mm {in})	45 {1.77}	
	Pitch circle diameter		(mm {in})	114.3 {4.500}	
	Material			Steel	
Temporary spare tire	Size			T125/70 D15	
	Air pressure		(kPa {kgf/cm^2, psi})	415 {4.2, 60}	
Temporary spare tire wheel and tire	Wheel and tire runout	Radial direction	(mm {in})	Max. 2.5 {0.10}	
		Lateral direction	(mm {in})	Max. 2.0 {0.08}	
FRONT SUSPENSION					
Lower arm ball joint rotation torque (Pull scale reading)			(N {kgf, lbf})	9.8—49 {1.0—5.0, 3—11}	
Stabilizer control link rotation torque			(N·m {kgf·cm, in·lbf})	0.2—1.5 {2—15, 2—13}	
REAR SUSPENSION					
Stabilizer control link rotation torque			(N·m {kgf·cm, in·lbf})	0.2—1.5 {2—15, 2—13}	

*1 : Fuel tank full; engine coolant and engine oil at specified level; spare tire, jack, and tools in designated position. Adjust to the median when carrying out wheel alignment.
*2 : Difference between left and right must not exceed 1.5°.
*3 : One balance weight: max. 60 g {2.0 oz}. If the total weight exceeds 100 g {3.5 oz} on one side, rebalance after moving the tire around on the rim. Do not use more than two balance weights on the inner or outer side of the wheel.

02–60 SERVICE TOOLS

02 SUSPENSION SST 02–60–1

02 SUSPENSION SST

W6U260W01

49 T034 1A0 Coil spring compressor set  TT0341A0X	49 T034 101 Spring compressor (Part of 49 T034 1A0) 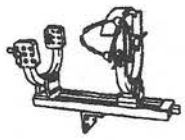 TT034101X	49 T034 102 Stand (Part of 49 T034 1A0)  TT034102X
49 T034 103 Hook (Part of 49 T034 1A0) 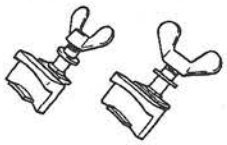 TT034103X	49 T034 104 Support (Part of 49 T034 1A0) 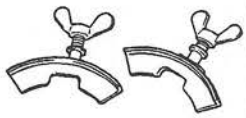 TT034104X	49 T034 105 Attachment 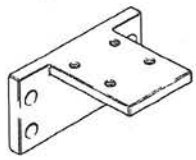 TT034105X
49 0107 680A Engine stand 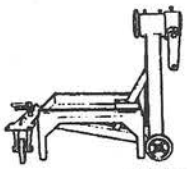 T0107680A	49 0180 510B Preload measuring attachment  T0180510B	49 B034 2A0B Rubber bushing replacer  TB0342A0B
49 8038 785A Dust boot installer  T8038785A	—	—

DRIVELINE/AXLE

03 SECTION

GENERAL PROCEDURES 03–10
FRONT AXLE 03–11
REAR AXLE 03–12
DRIVE SHAFT 03–13
TECHNICAL DATA 03–50
SERVICE TOOLS 03–60

03–10 GENERAL PROCEDURES

PRECAUTION (DRIVELINE/AXLE) 03–10–1
Wheel and Tire Removal/Installation .. **03–10–1**
Brake Line Disconnection/Connection **03–10–1**
Suspension Arm Removal/Installation **03–10–1**

PRECAUTION (DRIVELINE/AXLE)

W6U310W01

Wheel and Tire Removal/Installation

- The removal and installation procedure for the wheels and tires are not mentioned in this section. When a wheel is removed, tighten it to **89—117 N·m {9.0—12.0 kgf·m, 66—86 ft·lbf}**.

Brake Line Disconnection/Connection

Caution

- **Brake fluid will damage painted surfaces. If brake fluid does get on a painted surface, wipe it off immediately.**

- Tighten the brake pipe flare nut by using the **SST** (49 0259 770B). Be sure to modify the brake pipe flare nut tightening torque to allow for use of a torque wrench-**SST** combination. (Refer to 00–00 FUNDAMENTAL PROCEDURES, TORQUE FORMULAS.)
- If any brake line has been disconnected any time during the procedure, add brake fluid, bleed the brakes, and inspect for leakage after the procedure has been completed.

Suspension Arm Removal/Installation

- Tighten any part of the suspension that uses rubber bushings only after vehicle has been lowered and unloaded.

Note

- Unloaded ... Fuel tank full; engine coolant and engine oil at specified level; spare tire, jack, and tools in designated position.

03–11 FRONT AXLE

WHEEL HUB, STEERING KNUCKLE PREINSPECTION **03–11–1**
Wheel Bearing Play Inspection **03–11–1**
WHEEL HUB BOLT REPLACEMENT .. **03–11–1**
WHEEL HUB, STEERING KNUCKLE REMOVAL/INSTALLATION **03–11–2**
Locknut Removal Note **03–11–3**
Wheel Hub Component Removal Note **03–11–3**
Wheel Bearing Removal Note **03–11–3**
Dust Cover Removal Note **03–11–3**
Hub Bolt Removal Note **03–11–4**
Hub Bolt Installation Note **03–11–4**
Dust Cover Installation Note **03–11–4**
Wheel Bearing Installation Note **03–11–4**
Wheel Hub Component Installation Note **03–11–4**
Oil Seal Installation Note **03–11–4**
Locknut Installation Note **03–11–5**

WHEEL HUB, STEERING KNUCKLE PREINSPECTION

W6U311W01

Wheel Bearing Play Inspection

1. Position a dial indicator against the wheel hub. Push and pull the wheel hub by hand in the axial direction and measure the wheel bearing play.

   Wheel bearing play
   0.1 mm {0.004 in}

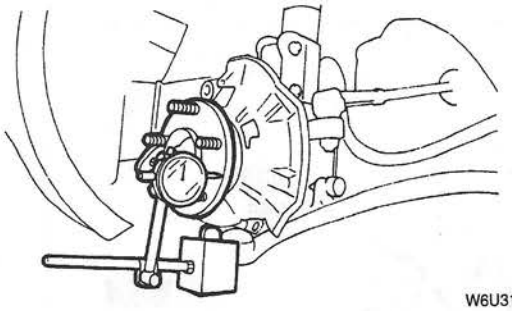

W6U311WA0

2. If the bearing play exceeds the specification, first replace and tighten the locknut to the specified torque, then replace the wheel bearing as necessary.

WHEEL HUB BOLT REPLACEMENT

W6U311W02

1. Remove the hub bolt by using the **SSTs**.

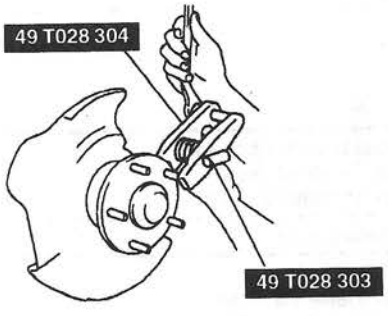

W6U311WA1

2. As shown in the figure, install the hub bolt into the wheel hub and set a washer and hub nut on the hub bolt.

3. Tighten the hub nut while holding the wheel hub by using the brass bar.

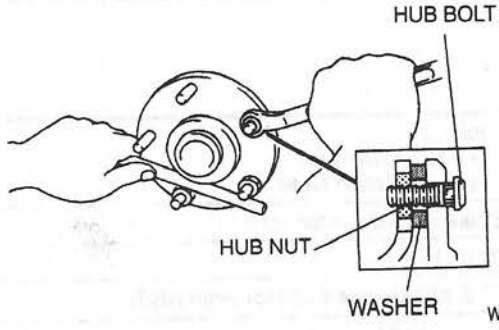

W6U311WA2

WHEEL HUB, STEERING KNUCKLE REMOVAL/INSTALLATION

W6U311W03

1. Remove in the order indicated in the table.
2. Install in the reverse order of removal.

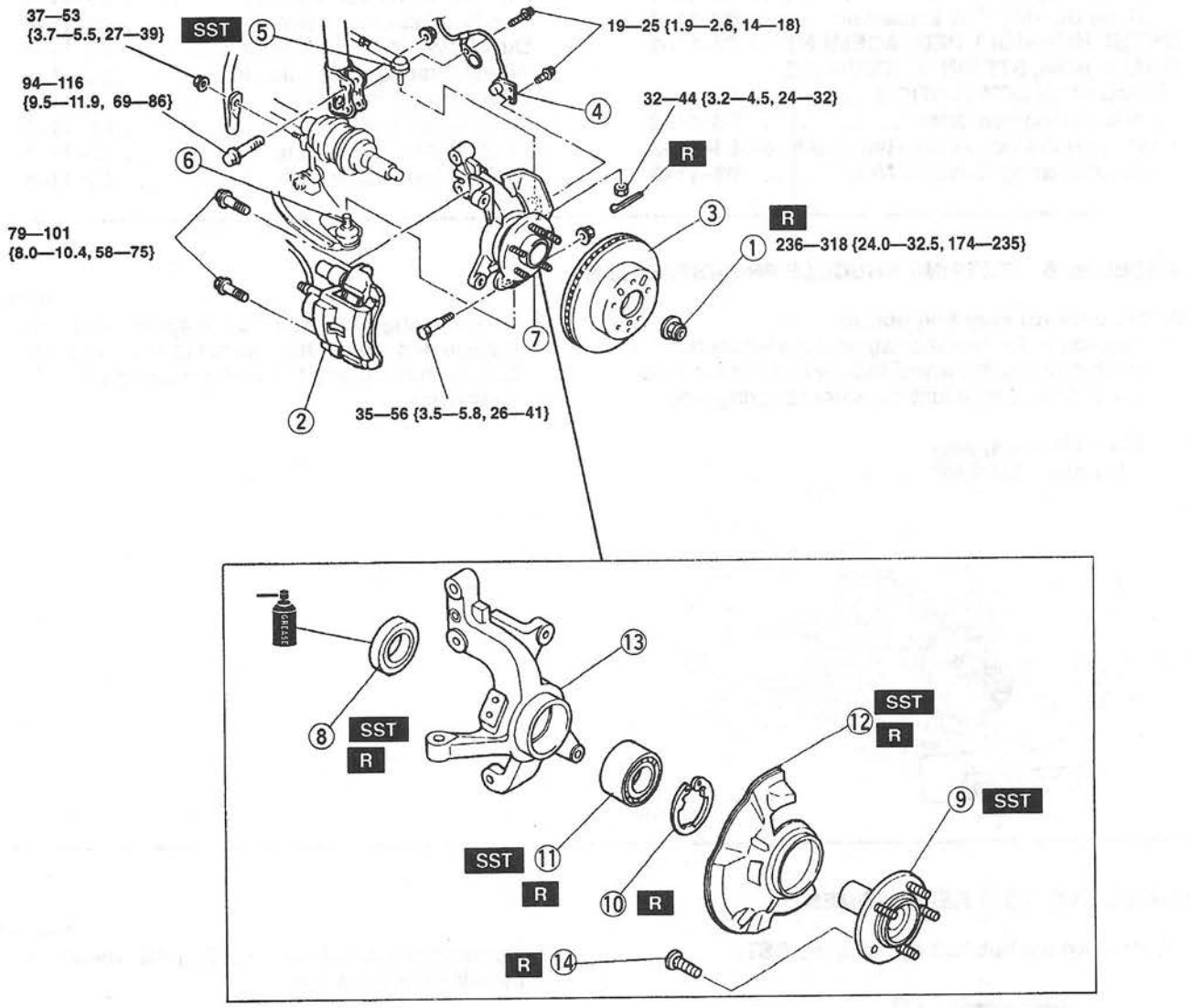

N·m {kgf·m, ft·lbf}

W6U311WA3

1	Locknut ☞ Removal Note ☞ Installation Note
2	Brake caliper component
3	Disc plate
4	ABS wheel-speed sensor (with ABS)
5	Tie-rod end ball joint ☞ 06–12 STEERING GEAR AND LINKAGE REMOVAL/INSTALLATION, Tie-rod End Ball Joint Removal Note
6	Lower arm ball joint
7	Wheel hub, steering knuckle, dust cover
8	Oil seal ☞ Installation Note

9	Wheel hub component ☞ Removal Note ☞ Installation Note
10	Retaining ring
11	Wheel bearing ☞ Removal Note ☞ Installation Note
12	Dust cover ☞ Removal Note ☞ Installation Note
13	Steering knuckle
14	Hub bolt ☞ Removal Note ☞ Installation Note

Locknut Removal Note

1. Knock the crimped portion of the locknut outward by using a small chisel and a hammer.
2. Lock the hub by applying the brakes.
3. Remove the locknut.

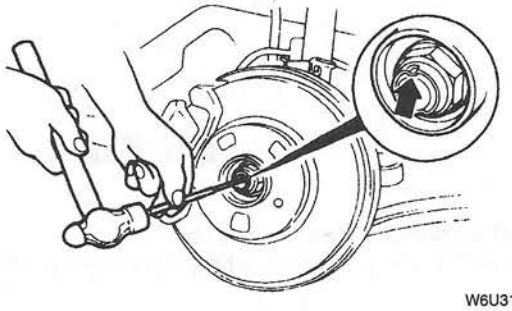

W6U311WA4

Wheel Hub Component Removal Note

1. Remove the wheel hub component by using the **SSTs**.

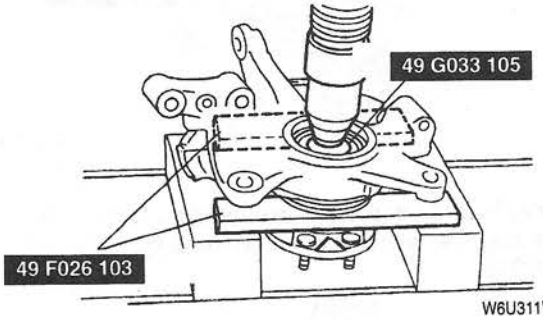

W6U311WA5

2. If the bearing inner race remains on the front wheel hub component, grind a section of the bearing inner race until **approx. 0.5 mm {0.02 in}** remains. Then remove it by using a chisel.

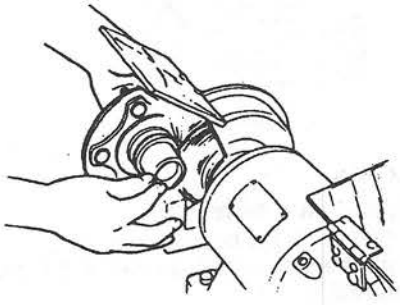

W6U311WA6

Wheel Bearing Removal Note

- Remove the wheel bearing by using the **SSTs**.

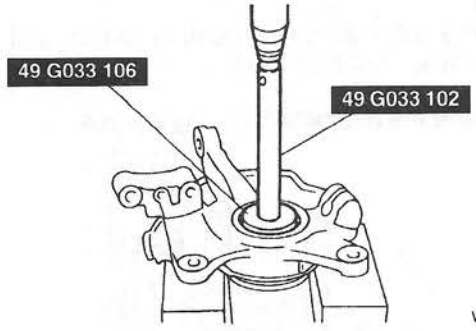

W6U311WA7

Dust Cover Removal Note

Note

- The dust cover does not need to be removed unless replacing it.

1. Mark the dust cover and steering knuckle for proper installation.

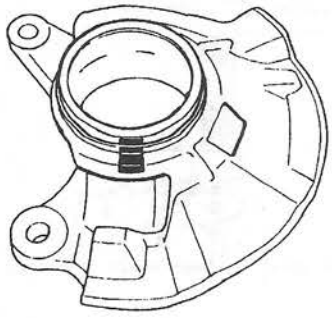

W6U311WA8

2. Remove the dust cover by using a chisel.

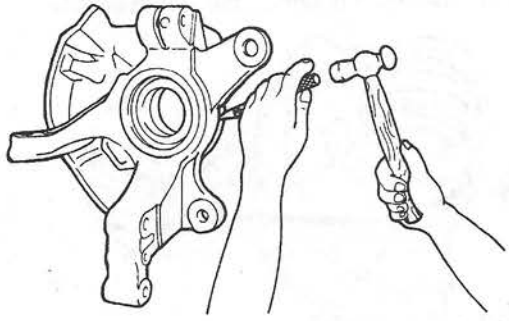

W6U311WA9

Hub Bolt Removal Note

Note
- The hub bolts do not need to be removed unless replacing them.

- Remove the hub bolts by using a press.

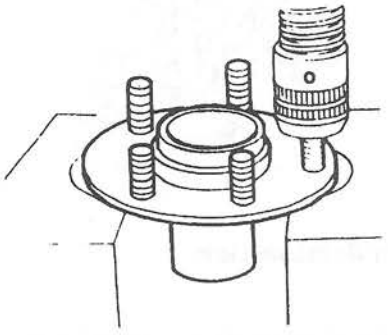

W6U311WAA

Hub Bolt Installation Note
- Install the new hub bolts by using a press.

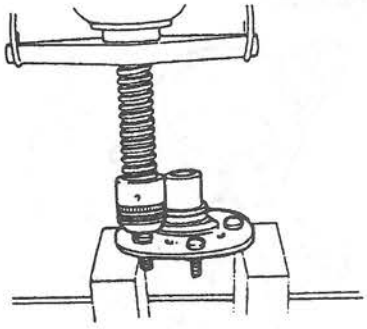

W6U311WAB

Dust Cover Installation Note
1. Mark the new dust cover as the removed one.

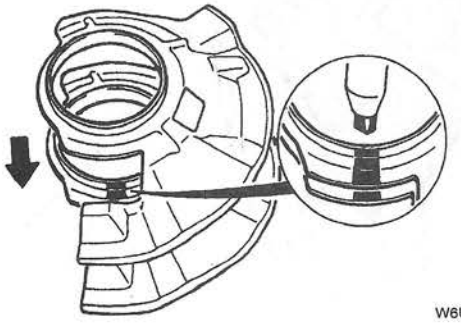

W6U311WAC

2. Align the marks of the new dust cover and the knuckle.
3. Install the new dust cover by using the **SSTs**.

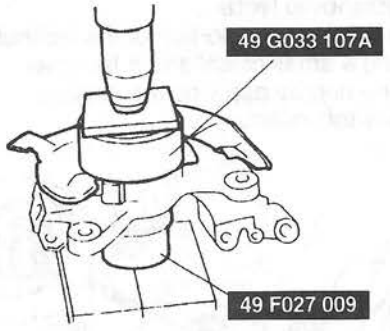

W6U311WAD

Wheel Bearing Installation Note
- Install the new wheel bearing by using the **SSTs**.

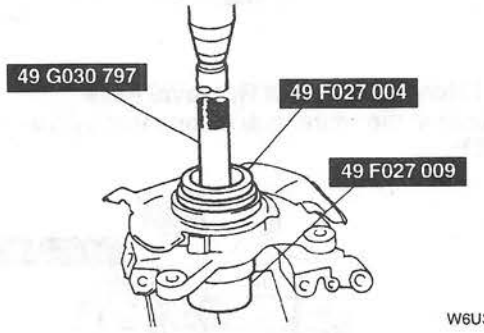

W6U311WAE

Wheel Hub Component Installation Note
- Install the wheel hub component by using the **SSTs**.

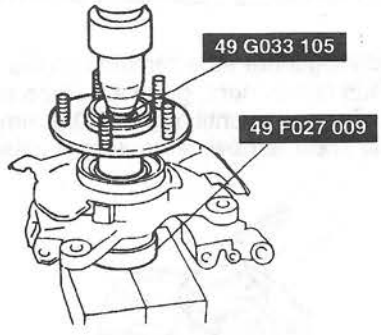

W6U311WAF

Oil Seal Installation Note
1. Apply grease to the new oil seal lip.
2. Install the new oil seal flush with the knuckle by using the **SST**.

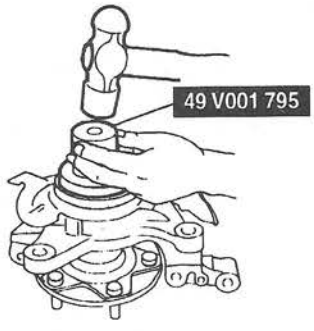

W6U311WAG

Locknut Installation Note

- Install a new locknut and stake it as shown.

Tightening torque
236—318 N·m
{24.0—32.5 kgf·m, 174—235 ft·lbf}

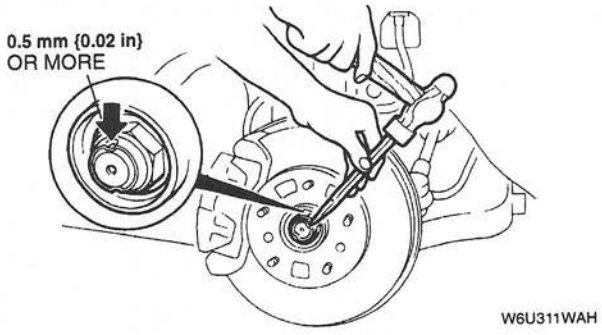

W6U311WAH

03–12 REAR AXLE

WHEEL HUB, HUB SPINDLE PREINSPECTION (DRUM BRAKE MODEL) 03–12–1
Wheel Bearing Play Inspection 03–12–1
WHEEL HUB, HUB SPINDLE REMOVAL/INSTALLATION (DRUM BRAKE MODEL) 03–12–2
Locknut Removal Note 03–12–2
ABS Sensor Rotor (With ABS) Removal Note 03–12–3
ABS Sensor Rotor (With ABS) Installation Note 03–12–3
Locknut Installation Note 03–12–3
WHEEL HUB, HUB SPINDLE PREINSPECTION (DISC BRAKE MODEL) 03–12–3
Wheel Bearing Play Inspection 03–12–3
WHEEL HUB BOLT REPLACEMENT .. 03–12–3
WHEEL HUB, HUB SPINDLE REMOVAL/INSTALLATION (DISC BRAKE MODEL) 03–12–4

WHEEL HUB, HUB SPINDLE PREINSPECTION (DRUM BRAKE MODEL)

W6U312W01

Wheel Bearing Play Inspection

1. Position a dial indicator against the brake drum. Push and pull the rear brake component by hand in the axial direction and measure the wheel bearing play.

   Wheel bearing play
   0.1 mm {0.004 in}

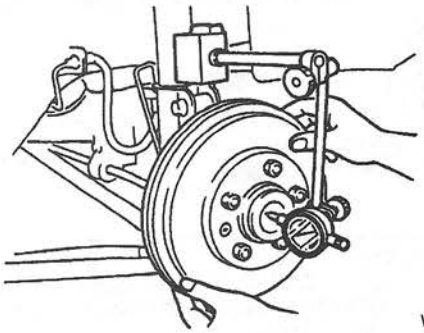

W6U312WA0

2. If the bearing play exceeds the specification, first, replace and tighten the locknut to the specified torque, then replace the wheel hub component as necessary.

WHEEL HUB, HUB SPINDLE REMOVAL/INSTALLATION (DRUM BRAKE MODEL)

W6U312W02

1. Remove in the order indicated in the table.
2. Install in the reverse order of removal.

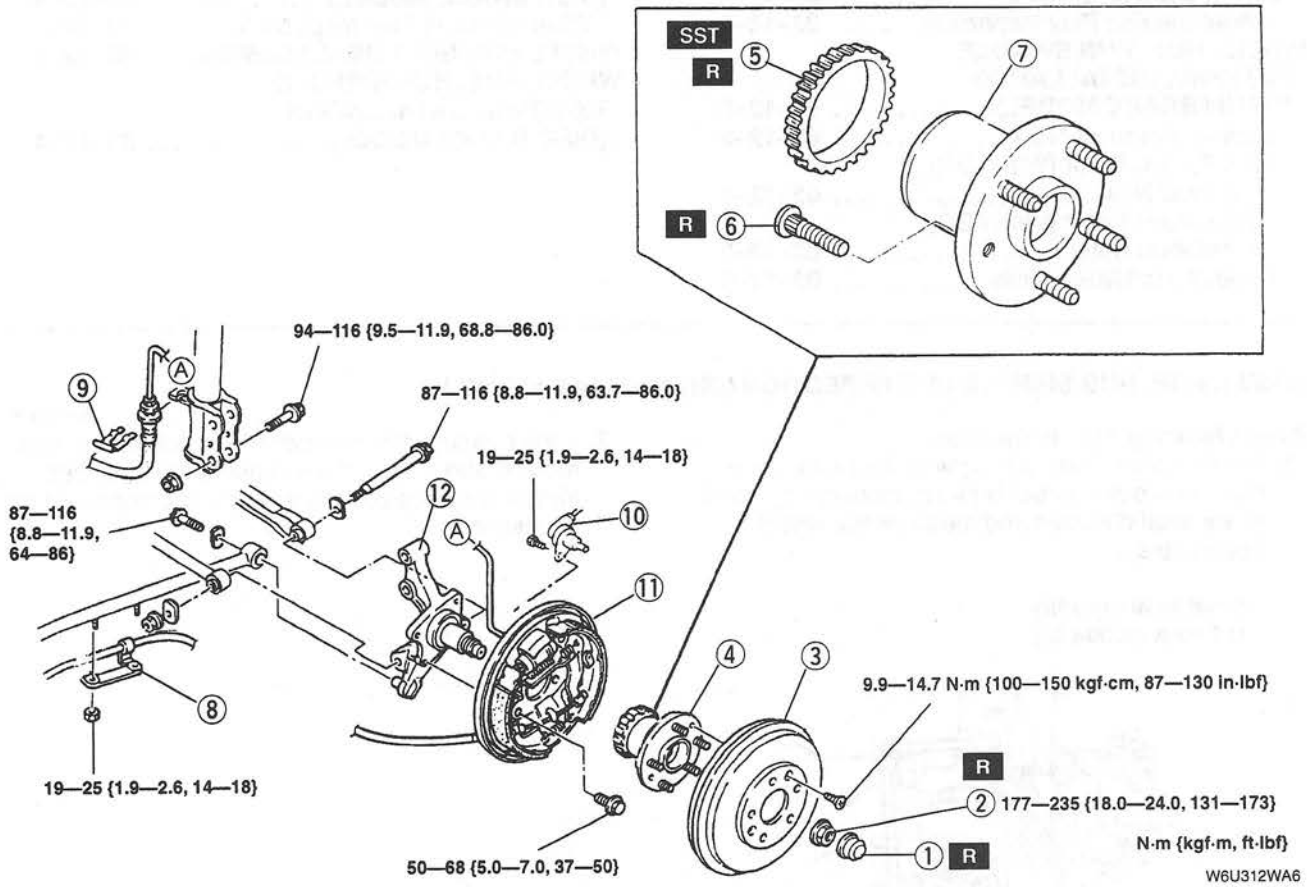

W6U312WA6

1	Hub Cap
2	Locknut ☞ Removal Note ☞ Installation Note
3	Brake drum
4	Wheel hub component and ABS sensor rotor (with ABS)
5	ABS sensor rotor (with ABS) ☞ Removal Note ☞ Installation Note

6	Hub bolt ☞ 03–11 WHEEL HUB, STEERING KNUCKLE REMOVAL/INSTALLATION, Hub Bolt Removal Note ☞ 03–11 WHEEL HUB, STEERING KNUCKLE REMOVAL/INSTALLATION, Hub Bolt Installation Note
7	Wheel hub component
8	Parking brake cable bracket
9	Clip
10	ABS wheel-speed sensor
11	Rear brake component
12	Hub spindle

Locknut Removal Note

1. Raise the staked portion of the locknut by using a small cape chisel and a hammer.
2. Lock the hub by applying the brakes.
3. Remove the locknut.

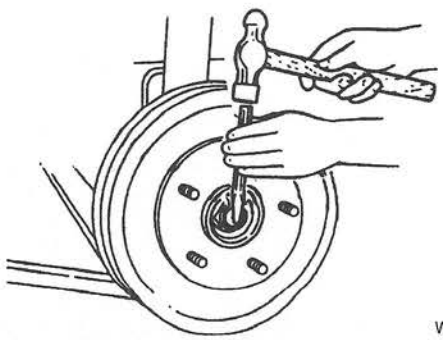

W6U312WA1

ABS Sensor Rotor (With ABS) Removal Note

Note
- The sensor rotor does not need to be removed unless replacing it.

- Remove the sensor rotor by using a chisel.

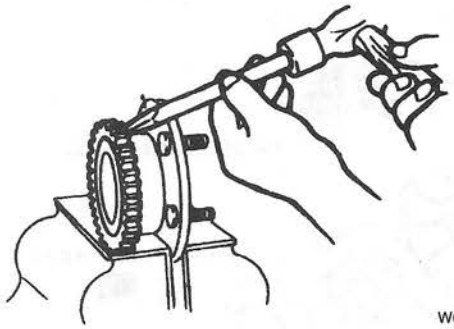

W6U312WA2

ABS Sensor Rotor (With ABS) Installation Note

Note
- The ABS sensor rotor can be installed in either direction.

1. Install a new rear ABS sensor rotor onto the wheel hub.
2. Using a steel plate and the **SST**, press the rotor until it is flush with the wheel hub.

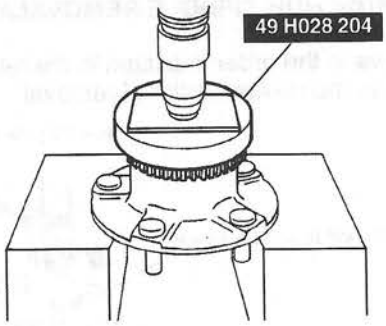

W6U312WA3

Locknut Installation Note
- Install a new locknut and stake it as shown.

Tightening torque
177—235 N·m
{18.0—24.0 kgf·m, 131—173 ft·lbf}

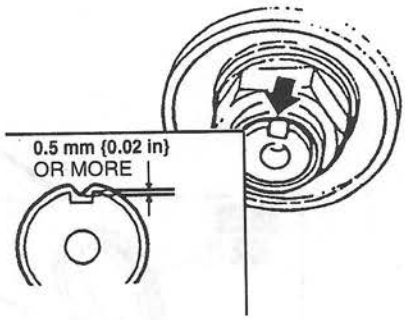

W6U312WA4

WHEEL HUB, HUB SPINDLE PREINSPECTION (DISC BRAKE MODEL)

W6U312W03

Wheel Bearing Play Inspection
(Refer to 03–11 WHEEL HUB, STEERING KNUCKLE INSPECTION, Wheel Bearing Play Inspection.)

WHEEL HUB BOLT REPLACEMENT

W6U312W04

(Refer to 03–11 WHEEL HUB BOLT REPLACEMENT.)

WHEEL HUB, HUB SPINDLE REMOVAL/INSTALLATION (DISC BRAKE MODEL)

W6U312W05

1. Remove in the order indicated in the table.
2. Install in the reverse order of removal.

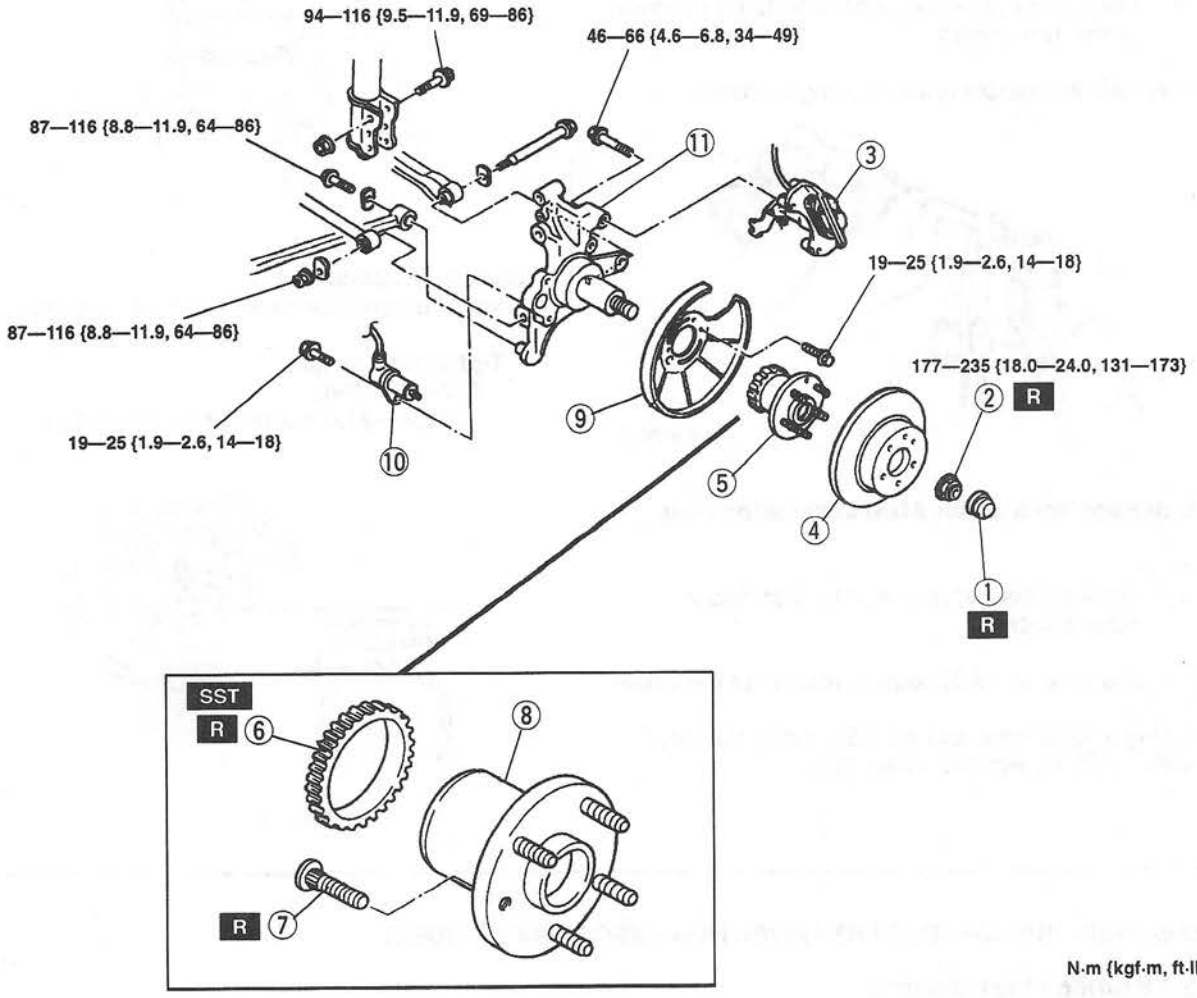

W6U312WA5

1	Hub Cap
2	Locknut ☞ WHEEL HUB, HUB SPINDLE REMOVAL/INSTALLATION (DRUM BRAKE MODEL), Locknut Removal Note ☞ WHEEL HUB, HUB SPINDLE REMOVAL/INSTALLATION (DRUM BRAKE MODEL), Locknut Installation Note
3	Brake caliper component
4	Disc plate
5	Wheel hub component and ABS sensor rotor (with ABS)
6	ABS sensor rotor (with ABS) ☞ WHEEL HUB, HUB SPINDLE REMOVAL/INSTALLATION (DRUM BRAKE MODEL), ABS Sensor Rotor (With ABS) Removal Note ☞ WHEEL HUB, HUB SPINDLE REMOVAL/INSTALLATION (DRUM BRAKE MODEL), ABS Sensor Rotor (With ABS) Installation Note

7	Hub bolt ☞ 03–11 WHEEL HUB, STEERING KNUCKLE REMOVAL/INSTALLATION, Hub Bolt Removal Note ☞ 03–11 WHEEL HUB, STEERING KNUCKLE REMOVAL/INSTALLATION, Hub Bolt Installation Note
8	Wheel hub component
9	Dust cover
10	ABS wheel-speed sensor (with ABS)
11	Hub spindle

03–13 DRIVE SHAFT

JOINT SHAFT PREINSPECTION 03–13–1
JOINT SHAFT
REMOVAL/INSTALLATION 03–13–2
Right Drive Shaft and Axle Removal Note 03–13–2
Joint Shaft Removal Note 03–13–3
Clip Installation Note 03–13–3
Joint Shaft Installation Note 03–13–3
Right Drive Shaft and Axle Installation Note 03–13–3
JOINT SHAFT
DISASSEMBLY/ASSEMBLY 03–13–3
Dust Cover Disassembly Note 03–13–4
Joint Shaft Disassembly Note 03–13–4
Dust Seal (Left), Bearing Disassembly Note 03–13–4
Dust Seal (Right) Assembly Note 03–13–4
Bearing Assembly Note 03–13–4
Dust Seal (Left) Assembly Note 03–13–4
Joint Shaft Assembly Note 03–13–5
Dust Cover Assembly Note 03–13–5
DRIVE SHAFT PREINSPECTION 03–13–5
DRIVE SHAFT
REMOVAL/INSTALLATION 03–13–6
Engine Mounting Member Removal Note 03–13–7
Drive Shaft Removal Note 03–13–7
Drive Shaft Installation Note 03–13–7
DRIVE SHAFT (MTX, DOUBLE OFFSET TYPE)
DISASSEMBLY/ASSEMBLY 03–13–8
Boot Band Disassembly Note 03–13–9
Clip Disassembly Note 03–13–9
Snap Ring Disassembly Note 03–13–9
Balls, Inner Ring, Cage Disassembly Note 03–13–9
Boot Disassembly Note 03–13–9
ABS Sensor Rotor Disassembly Note . 03–13–9
ABS Sensor Rotor Assembly Note ... 03–13–10
Boot Assembly Note 03–13–10
Cage, Inner Ring, Balls, Snap Ring, Assembly Note 03–13–10
Outer Ring, Clip Assembly Note 03–13–10
Boot Band Assembly Note 03–13–11
DRIVE SHAFT (ATX, TORIPOD TYPE)
DISASSEMBLY/ASSEMBLY 03–13–11
Boot Band Disassembly Note 03–13–12
Outer Ring Disassembly Note 03–13–12
Snap Ring, Tripod Joint Disassembly Note 03–13–12
Boot Disassembly Note 03–13–12
ABS Sensor Rotor (With ABS) Disassembly Note 03–13–12
ABS Sensor Rotor (With ABS) Assembly Note 03–13–12
Boot Assembly Note 03–13–13
Tripod Joint, Snap Ring Assembly Note 03–13–13
Outer Ring Assembly Note 03–13–13
Boot Band Assembly Note 03–13–13

JOINT SHAFT PREINSPECTION

W6U313W01

1. Verify that the joint shaft is not twisted or cracked. Replace it as necessary.
2. Turn the joint shaft by hand and verify that the bearing rotates smoothly and freely. Replace it as necessary.

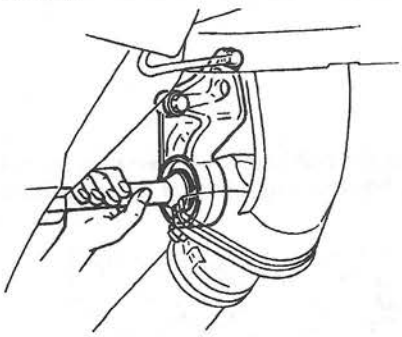

W6U313WA0

JOINT SHAFT REMOVAL/INSTALLATION

W6U313W02

1. Drain the transaxle oil. (Refer to 05–15 TRANSAXLE OIL REPLACEMENT.) (Refer to 05–17A AUTOMATIC TRANSAXLE FLUID REPLACEMENT.) (Refer to 05–17B AUTOMATIC TRANSAXLE FLUID REPLACEMENT.)
2. Remove in the order indicated in the table.
3. Install in the reverse order of removal.

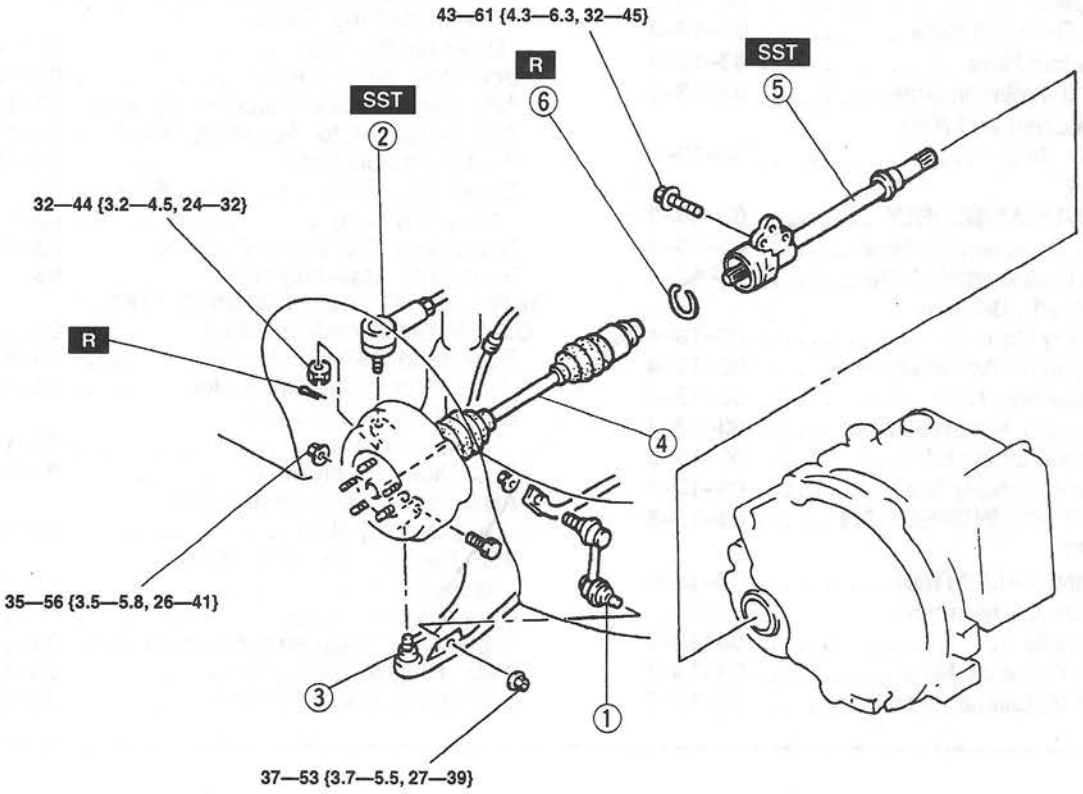

N·m {kgf·m, ft·lbf}

W6U313WA1

1	Stabilizer control link
2	Tie-rod end ball joint ☞ 06–12 STEERING GEAR AND LINKAGE REMOVAL/INSTALLATION, Tie-rod End Ball Joint Removal Note
3	Lower arm ball joint
4	Right drive shaft and axle ☞ Removal Note ☞ Installation Note
5	Joint shaft ☞ Removal Note ☞ Installation Note
6	Clip ☞ Installation Note

Right Drive Shaft and Axle Removal Note

1. Remove the clinch bolt and nut.
2. Wrap a rag around the ball joint dust boot.
3. Pry the lower arm out of the knuckle.

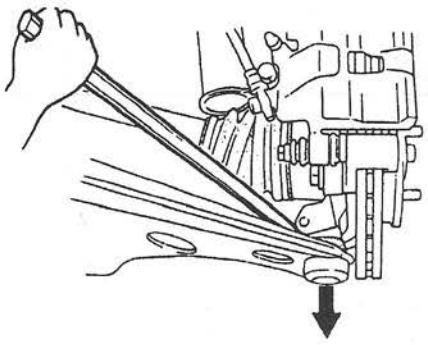

W6U313WA2

4. Separate the right side drive shaft from the joint shaft by hammering on a bar inserted between them.

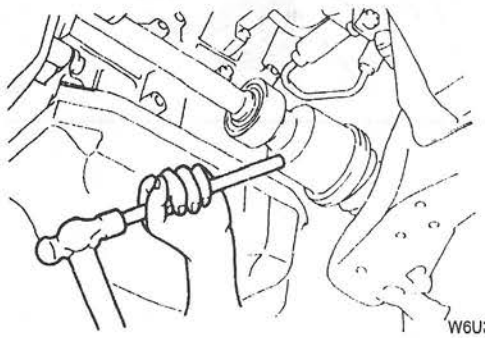

W6U313WA3

Joint Shaft Removal Note

- Install the **SST** into the transaxle to hold the side gears after the joint shaft is removed.

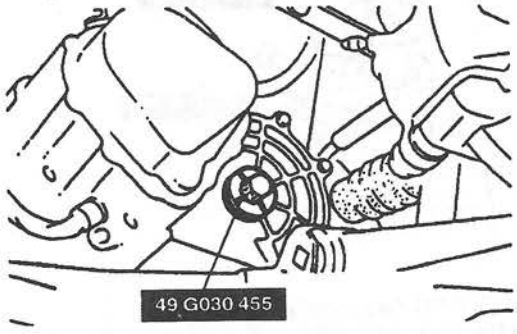

W6U313WA4

Clip Installation Note

- Install the new clip with the opening facing upward.

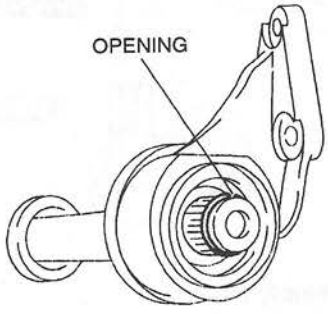

W6U313WA5

Joint Shaft Installation Note

1. Install the joint shaft with the end-gap of a new clip facing upward.
2. Hand tighten the A bolts.
3. Tighten the A, B bolts to the specified torque.

Tightening torque
43—61 N·m {4.3—6.3 kgf·m, 32—45 ft·lbf}

KL ENGINE

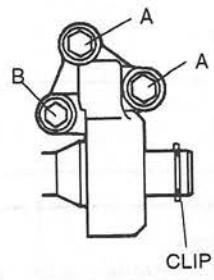

FS ENGINE

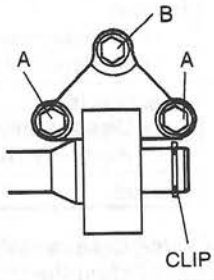

W6U313WA6

Right Drive Shaft and Axle Installation Note

1. Push the drive shaft into the joint shaft.
2. After installation, pull the front hub outward to verify that the drive shaft is securely held by the clip.

JOINT SHAFT DISASSEMBLY/ASSEMBLY

W6U313W03

1. Disassemble in the order indicated in the table.
2. Assemble in the reverse order of disassembly.

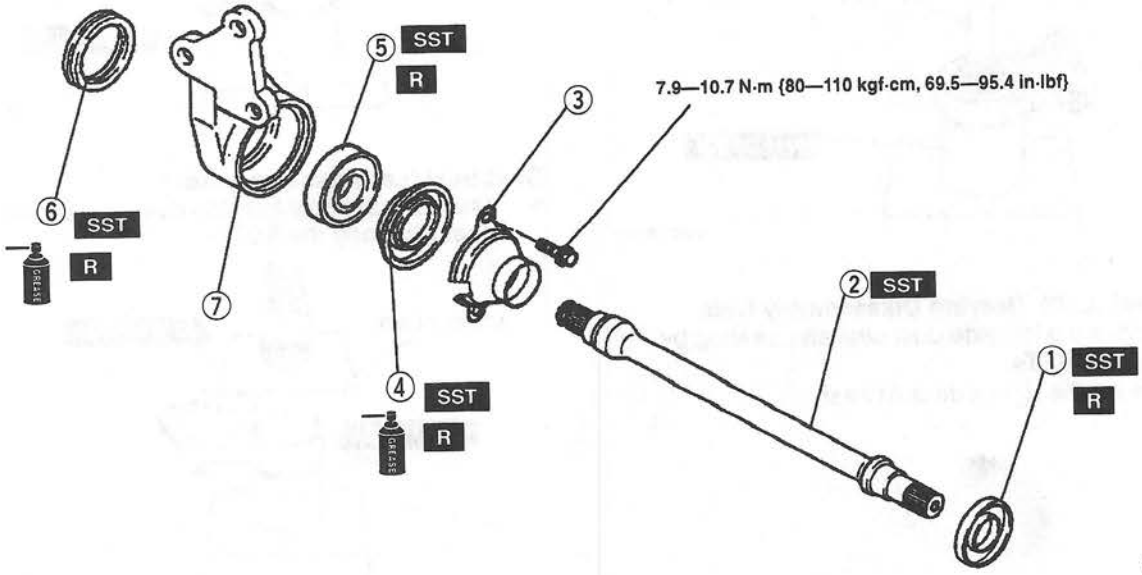

W6U313WA7

1	Dust cover ☞ Disassembly Note ☞ Assembly Note
2	Joint shaft ☞ Disassembly Note ☞ Assembly Note
3	Dust cover (KL engine)
4	Dust seal (left) ☞ Assembly Note
5	Bearing ☞ Disassembly Note ☞ Assembly Note
6	Dust seal (right) ☞ Disassembly Note ☞ Assembly Note
7	Bracket

Dust Cover Disassembly Note
- While holding the joint shaft, press out the dust cover by using the **SST**.

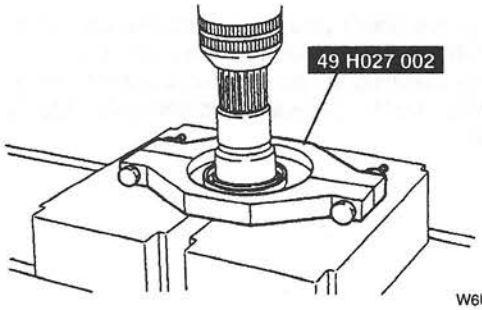

W6U313WA8

Joint Shaft Disassembly Note
- Disassemble the joint shaft by using the **SST**.

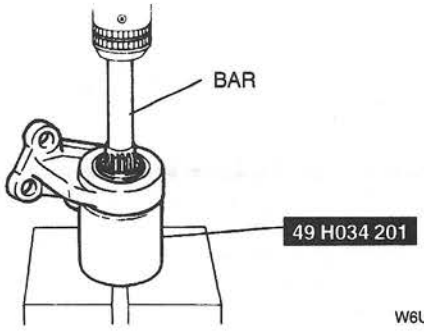

W6U313WA9

Dust Seal (Left), Bearing Disassembly Note
1. Remove the left side dust seal and bearing by using the **SSTs**.
2. Remove the right side dust seal.

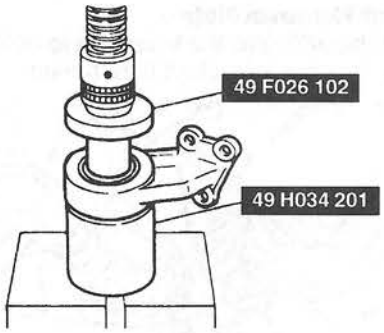

W6U313WAA

Dust Seal (Right) Assembly Note
- Install the new right side dust seal by using the **SSTs**.

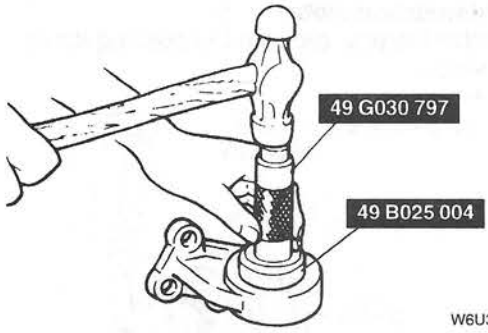

W6U313WAB

Bearing Assembly Note
- Install the new bearing by using the **SSTs**.

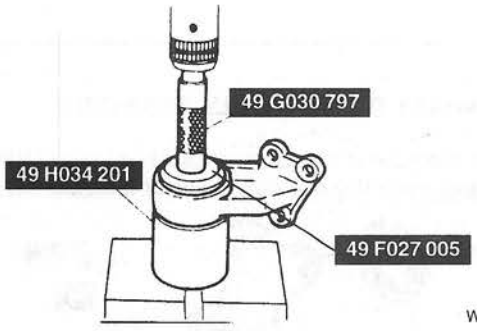

W6U313WAC

Dust Seal (Left) Assembly Note
- Assemble the new left side dust seal by using a steel plate and the **SSTs**.

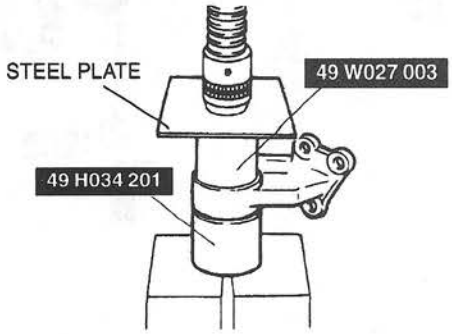

W6U313WAD

Joint Shaft Assembly Note

- Assemble the joint shaft by using a press and the **SST**.

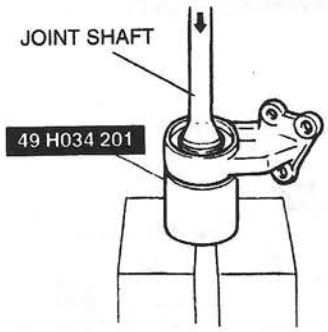

W6U313WAE

2. Press in the dust cover to the marked position by using a steel plate and the **SST**.
3. Verify that length L is within the specification.

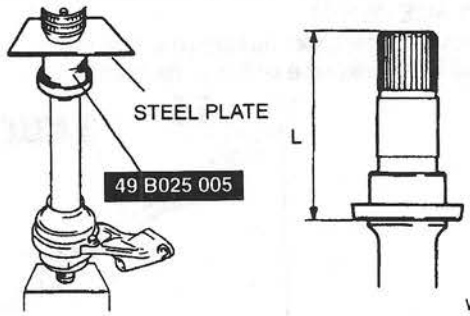

W6U313WAG

Dust Cover Assembly Note

1. Mark the shaft as shown in the figure.

Length L
88.5—89.5 mm {3.49—3.52 in}

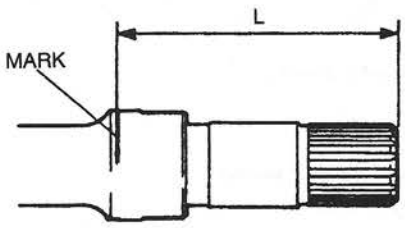

W6U313WAF

DRIVE SHAFT PREINSPECTION

W6U313W04

1. Inspect the dust boot on the drive shaft for cracks, damage, leaking grease, and a loose boot band.
2. Inspect the drive shaft for bending, cracks, and wear of joints or splines.
3. Repair or replace the drive shaft as necessary.

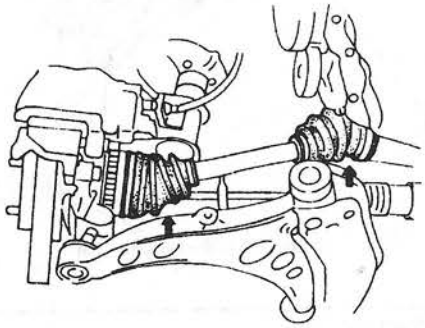

W6U313WAH

DRIVE SHAFT REMOVAL/INSTALLATION

W6U313W05

1. Drain the transaxle oil. (Refer to 05–15 TRANSAXLE OIL REPLACEMENT.) (Refer to 05–17A AUTOMATIC TRANSAXLE FLUID REPLACEMENT.) (Refer to 05–17B AUTOMATIC TRANSAXLE FLUID REPLACEMENT.)
2. Remove in the order indicated in the table.
3. Install in the reverse order of removal.

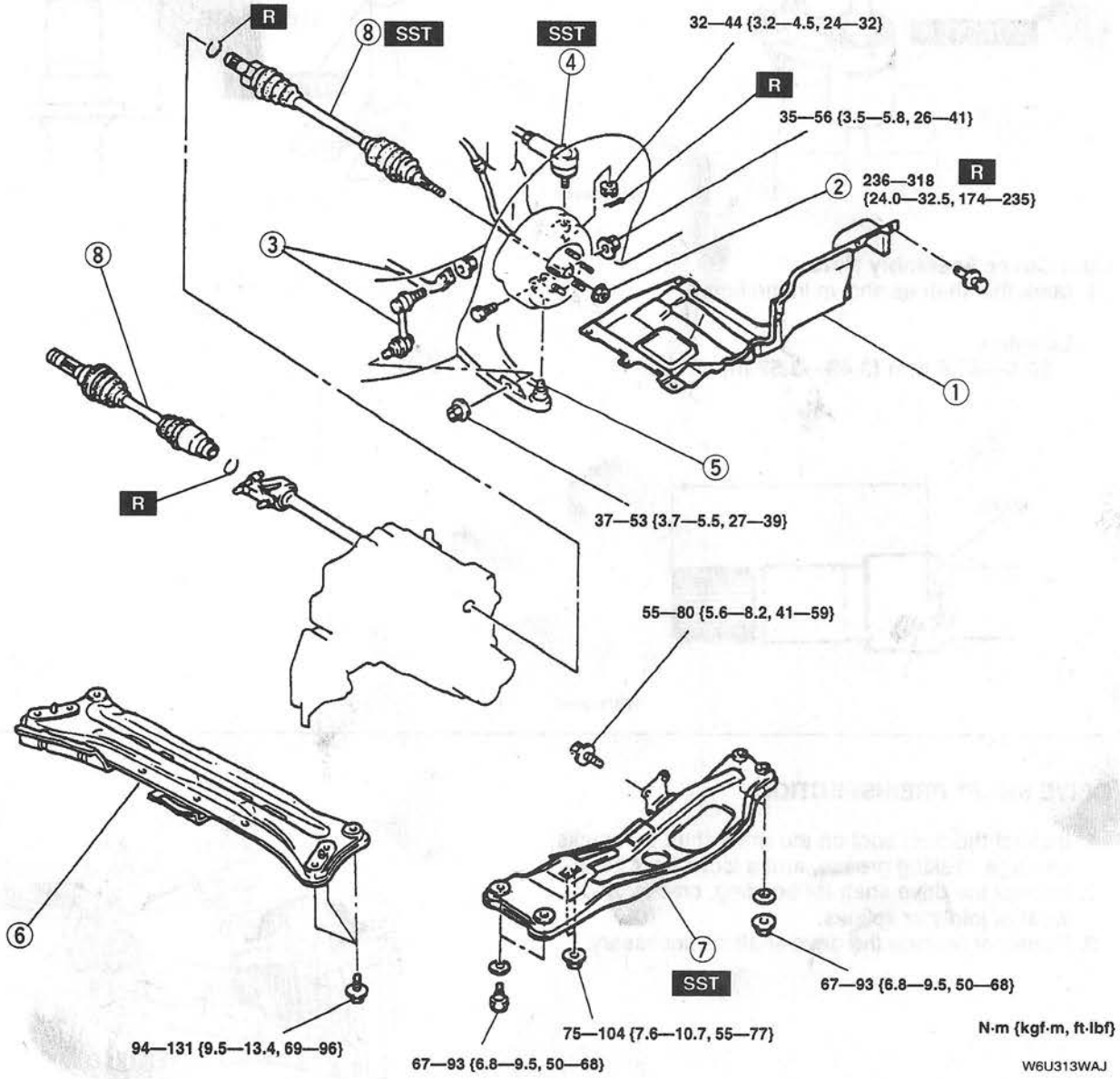

1	Splash shield
2	Locknut ☞ 03–11 WHEEL HUB, STEERING KNUCKLE REMOVAL/INSTALLATION, Locknut Removal Note ☞ 03–11 WHEEL HUB, STEERING KNUCKLE REMOVAL/INSTALLATION, Locknut Installation Note
3	Stabilizer and control link
4	Tie-rod end ball joint ☞ 06–12 STEERING GEAR AND LINKAGE REMOVAL/INSTALLATION, Tie-rod End Ball Joint Removal Note

5	Lower arm ball joint
6	Transverse member
7	Engine mounting member ☞ Removal Note
8	Drive shaft ☞ Removal Note ☞ Installation Note

Engine Mounting Member Removal Note

Caution
- **To prevent damage to the body, insert a rag into the gap between the fender and body, when installing the SST.**

- Suspend the engine by using the **SST** and remove the engine mounting member.

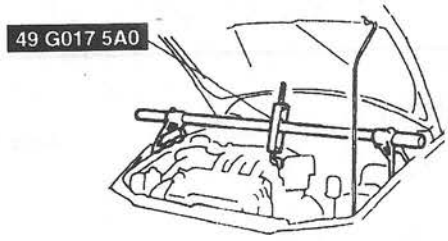

W6U313WAK

Drive Shaft Removal Note

Caution
- **The sharp edges of the drive shaft can slice or puncture the oil seal. Be careful when removing the drive shaft from the transaxle.**

1. Separate the left side drive shaft from the transaxle by prying with a bar inserted between the outer ring and the transaxle, as shown in the figure.

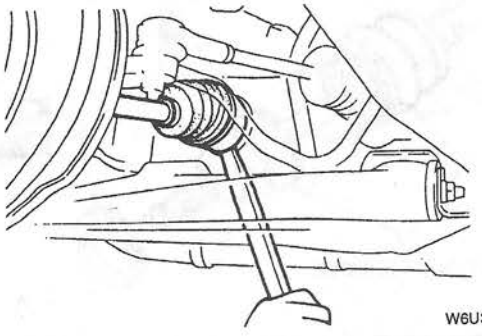

W6U313WAL

2. Install the **SST** into the transaxle to hold the side gears.

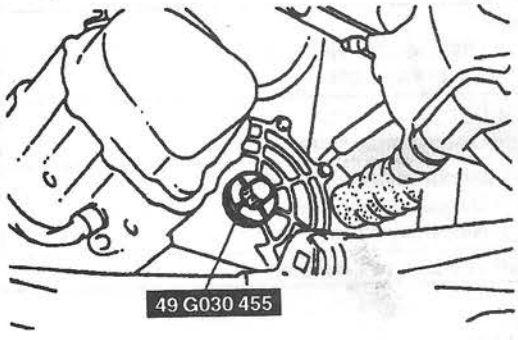

W6U313WAM

3. Separate the right side drive shaft from the joint shaft by hammering on a bar inserted between them.

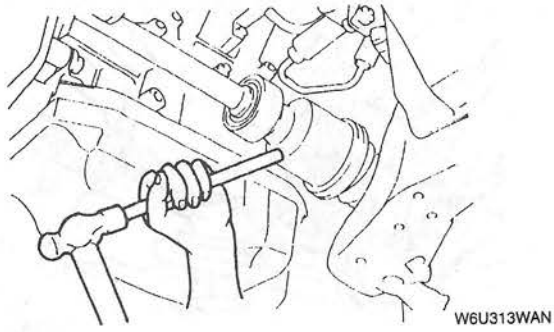

W6U313WAN

Note
- If the drive shaft will not come out of the front wheel hub easily, install an already discarded nut onto the drive shaft so that the nut is flush with the end of the drive shaft. Tap the nut with a copper hammer to loosen the drive shaft from the front wheel hub.

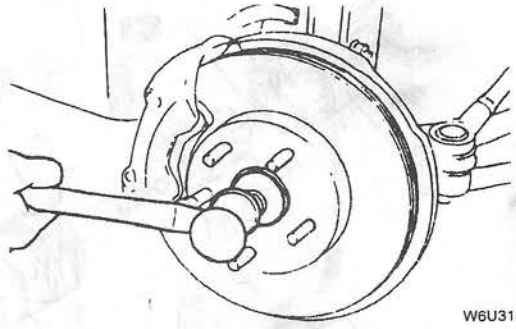

W6U313WAP

Drive Shaft Installation Note

Caution
- **The sharp edges of the drive shaft can slice or puncture the oil seal. Be careful when installing the drive shaft to the transaxle.**

1. Turn the clip with the opening facing upward.

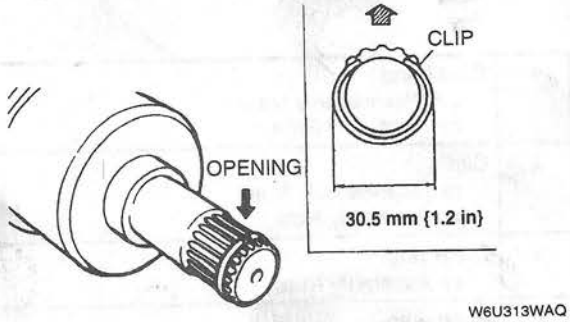

W6U313WAQ

2. Apply grease to the ends of the drive shafts.

Caution
- **The oil seals are damaged easily if this procedure is not done correctly.**

3. Push the drive shaft into the transaxle (left side) or joint shaft (right side).

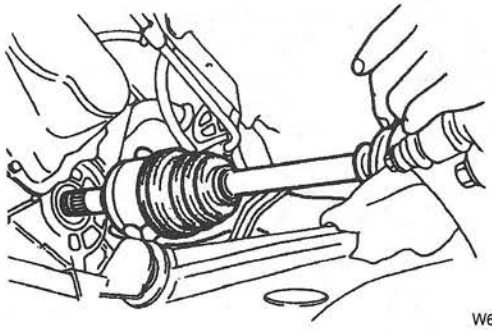

W6U313WAR

4. After installation, pull the front hub outward to confirm that the drive shaft is securely held by the clip.

DRIVE SHAFT (MTX, DOUBLE OFFSET TYPE) DISASSEMBLY/ASSEMBLY

W6U313W06

1. Disassemble in the order indicated in the table.
2. Assemble in the reverse order of disassembly.

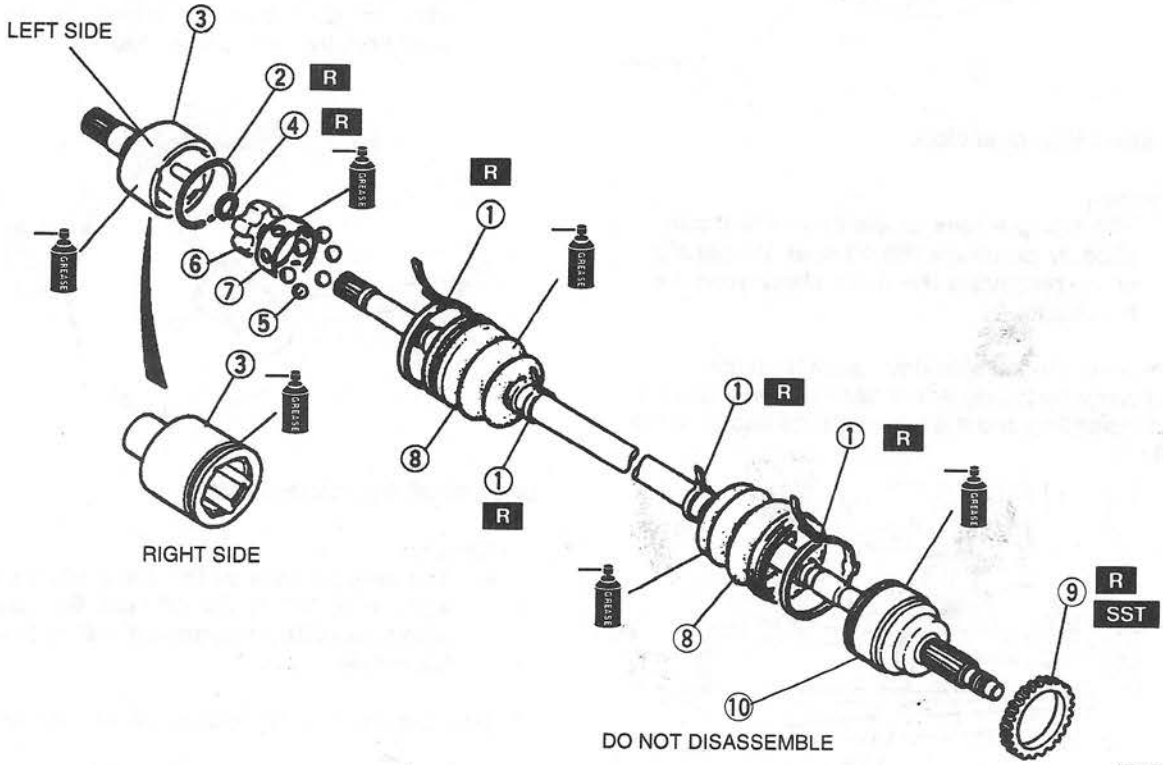

W6U313WAS

1	Boot band ☞ Disassembly Note ☞ Assembly Note
2	Clip ☞ Disassembly Note ☞ Assembly Note
3	Outer ring ☞ Assembly Note
4	Snap ring ☞ Disassembly Note ☞ Assembly Note
5	Balls ☞ Disassembly Note ☞ Assembly Note

6	Inner ring ☞ Disassembly Note ☞ Assembly Note
7	Cage ☞ Disassembly Note ☞ Assembly Note
8	Boot ☞ Disassembly Note
9	ABS sensor rotor (with ABS) ☞ Disassembly Note ☞ Assembly Note
10	Shaft and bell joint component

Boot Band Disassembly Note

1. Pry up the locking clips by using a screwdriver.
2. Pull back the end of the band.

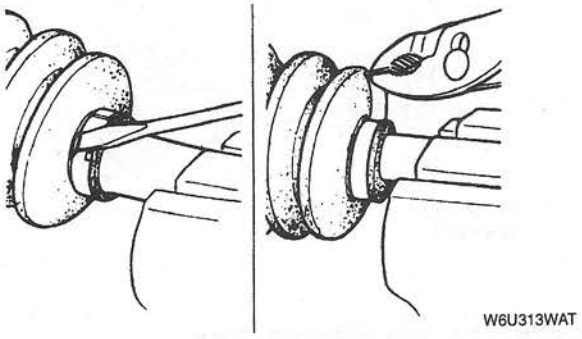

W6U313WAT

Clip Disassembly Note

Caution

- **Mark with paint; do not use a punch. The component will be damaged.**

1. Mark the drive shaft and outer ring for proper assembly.
2. Remove the clip.

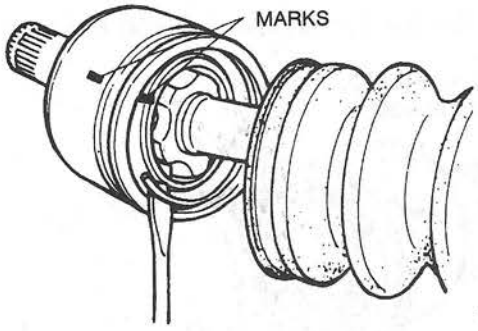

W6U313WAU

Snap Ring Disassembly Note

Caution

- **Mark with paint; do not use a punch. The component will be damaged.**

1. Mark the drive shaft and inner ring for proper assembly.
2. Remove the snap ring by using snap-ring pliers.

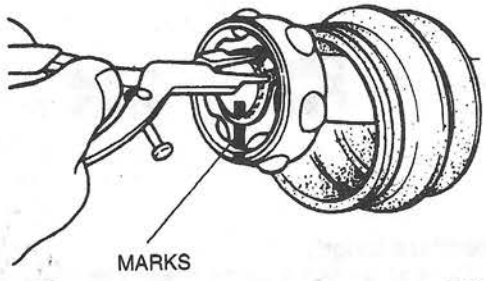

W6U313WAV

Balls, Inner Ring, Cage Disassembly Note

Caution

- **Mark with paint; do not use a punch. The component will be damaged.**

1. Mark the inner ring and cage.
2. Turn the cage **approximately 30 degrees** and pull the cage and balls away from the inner ring.

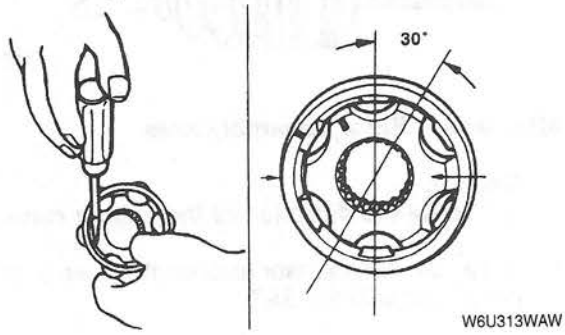

W6U313WAW

Boot Disassembly Note

Note

- The wheel side boot does not need to be removed unless replacing it or the bell joint and shaft assembly.
- Do not strip the tape until the boot is assembled.

1. Wrap the shaft splines with tape.
2. Remove the boot.

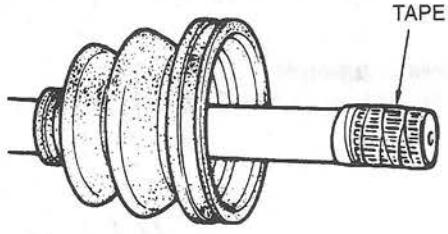

W6U313WAX

ABS Sensor Rotor Disassembly Note

Note

- The sensor rotor does not need to be removed unless replacing it.

- Tap the ABS sensor rotor off the bell joint outer race by using a chisel.

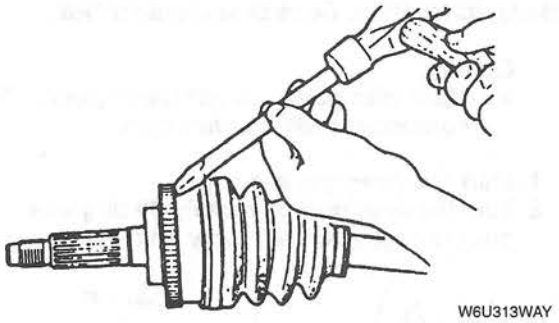
W6U313WAY

ABS Sensor Rotor Assembly Note

Caution
- **Verify the direction of the sensor rotor.**

- Set a new ABS sensor rotor on the drive shaft and press it on with the **SST**.

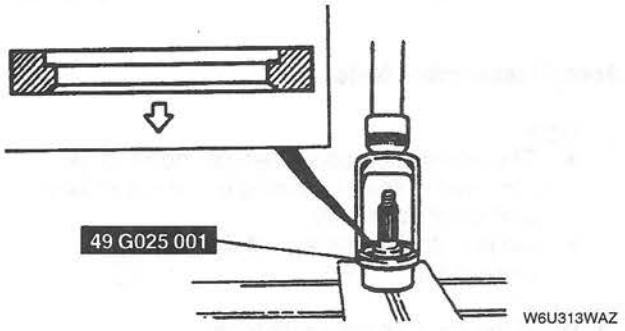

W6U313WAZ

Boot Assembly Note

1. Fill the boot with the grease supplied in the boot kit.

Grease amount
90—110 g {3.18—3.88 oz}

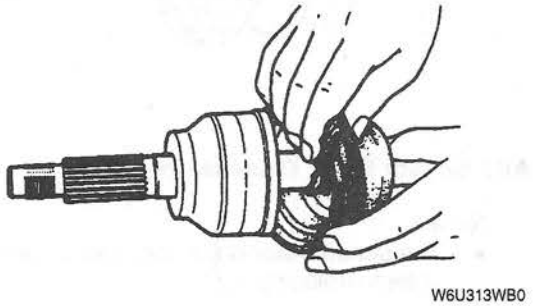
W6U313WB0

2. Slide the boot onto the shaft.

Cage, Inner Ring, Balls, Snap Ring, Assembly Note

1. Align the marks, and install the balls and cage to the inner ring in the direction shown in the figure.

Caution
- **Install the cage with the offset facing the snap ring groove. If incorrectly installed, the drive shaft may become disengaged.**

2. Install a new snap ring.

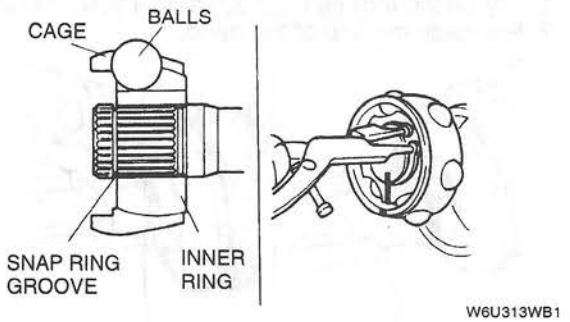

W6U313WB1

Outer Ring, Clip Assembly Note

Note
- Use the specified grease supplied in the boot kit and joint kit.

1. Fill the boot (transaxle side) and outer ring with the specified grease.

Grease amount
120—140 g {4.3—4.9 oz}

2. Align the marks, and install the outer ring onto the shaft.
3. Install a new clip.
4. Install the boot.

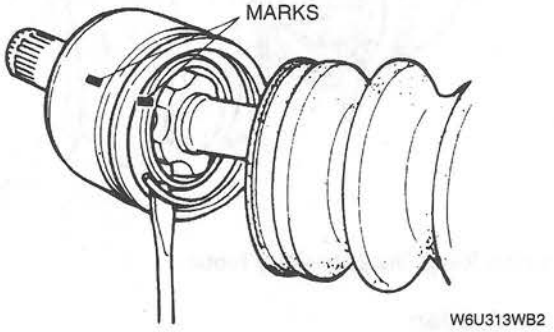

W6U313WB2

5. Set the drive shaft by keeping the standard length.

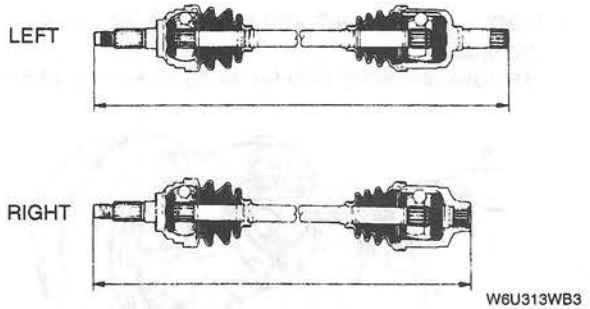

W6U313WB3

Standard length
Right side: 595.2—605.2 mm {23.44—23.82 in}
Left side: 643.7—653.7 mm {25.35—25.73 in}

6. Release trapped air from inside the boot (transaxle side) by using a screwdriver covered with a rag.

7. Verify the drive shaft length is within the standard.

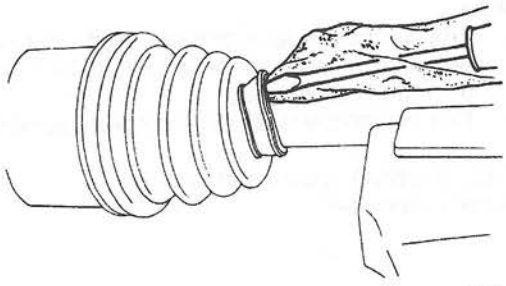

W6U313WB4

1. Fold the band back and use pliers to pull it tight.
2. Lock the end of the band by bending the locking clips.

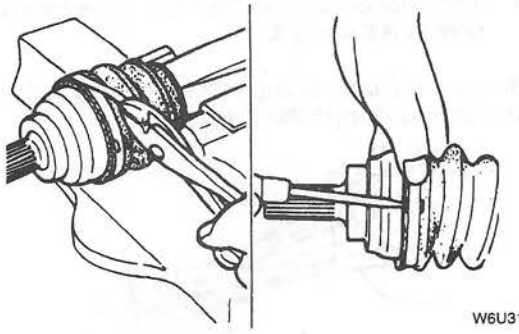

W6U313WB5

Boot Band Assembly Note

Note
- Always use new bands.
- The band should be folded in the direction opposite to the forward revolving direction of the drive shaft.

DRIVE SHAFT (ATX, TORIPOD TYPE) DISASSEMBLY/ASSEMBLY

W6U313W07

1. Disassemble in the order indicated in the table.
2. Assemble in the reverse order of disassembly.

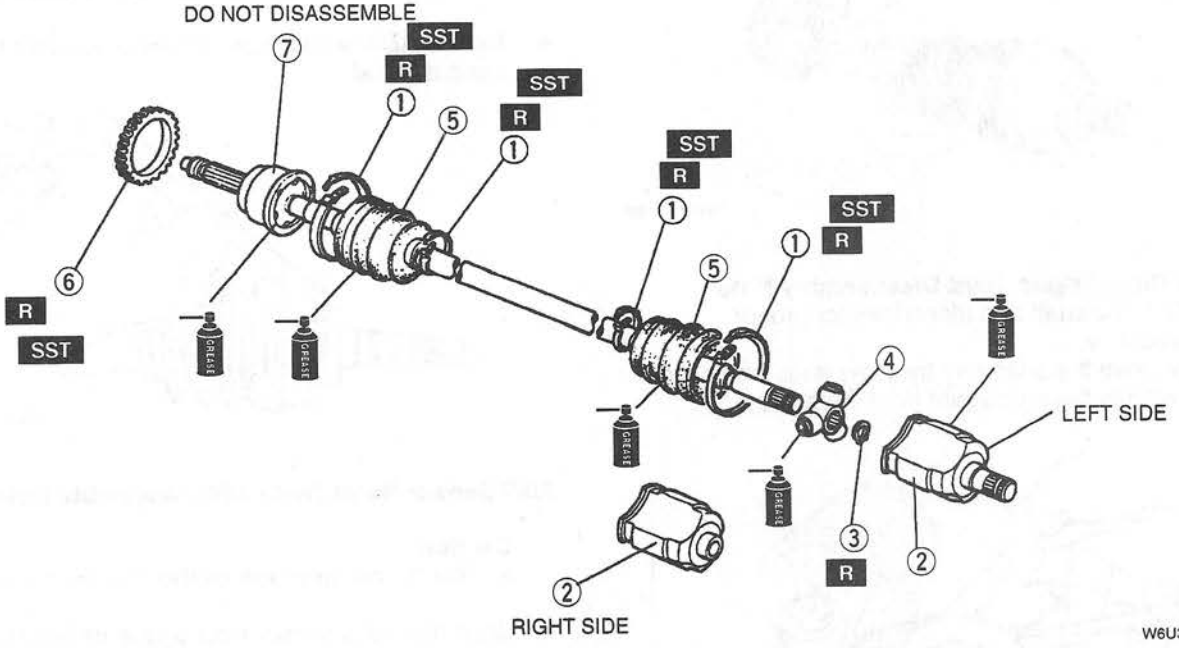

W6U313WB6

1	Boot band ☞ Disassembly Note ☞ Assembly Note
2	Outer ring ☞ Disassembly Note ☞ Assembly Note
3	Snap ring ☞ Disassembly Note ☞ Assembly Note

4	Tripod joint ☞ Disassembly Note ☞ Assembly Note
5	Boot ☞ Disassembly Note ☞ Assembly Note
6	ABS sensor rotor (with ABS) ☞ Disassembly Note ☞ Assembly Note
7	Shaft and ball joint component

Boot Band Disassembly Note

Note
- The boot band does not need to be removed unless replacing it.

- Remove the boot clamp with end clamp pliers as shown and discard the clamp.

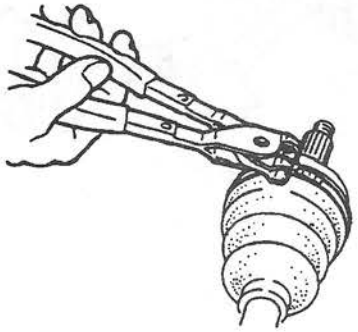

W6U313WB7

Outer Ring Disassembly Note

1. Mark the outer ring and the shaft for proper assembly.
2. Remove the outer ring.

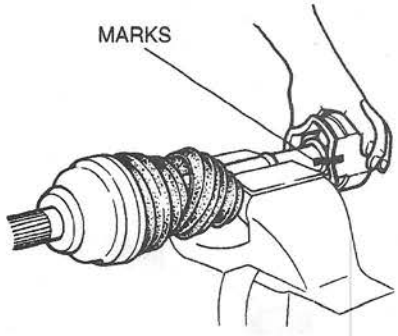

W6U313WB8

Snap Ring, Tripod Joint Disassembly Note

1. Mark the shaft and tripod joint for proper assembly.
2. Remove the snap ring by using snap-ring pliers.
3. Remove the tripod joint from the shaft.

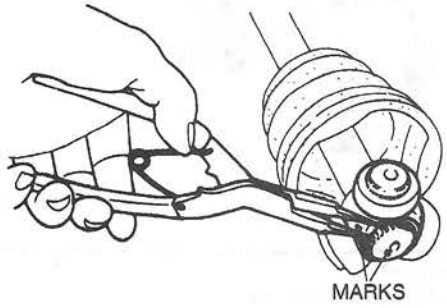

W6U313WB9

Boot Disassembly Note

Note
- The bell joint side boot does not need to be removed unless replacing it or the bell joint and shaft component.
- Do not strip the tape until the boot is assembled.

1. Wrap the shaft splines with tape.
2. Remove the boot.

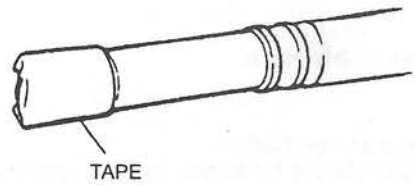

W6U313WBA

ABS Sensor Rotor (With ABS) Disassembly Note

Caution
- **Do not remove the sensor rotor unless it is necessary.**
- **Do not reuse the sensor rotor if removed.**

- Tap the ABS sensor rotor off the drive shaft by using a chisel.

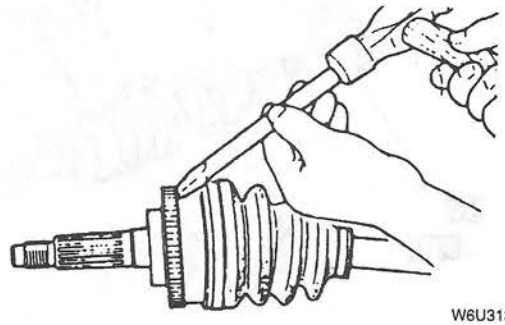

W6U313WBB

ABS Sensor Rotor (With ABS) Assembly Note

Caution
- **Verify the direction of the sensor rotor.**

- Set a new ABS sensor rotor on the drive shaft and press it on by using the **SST**.

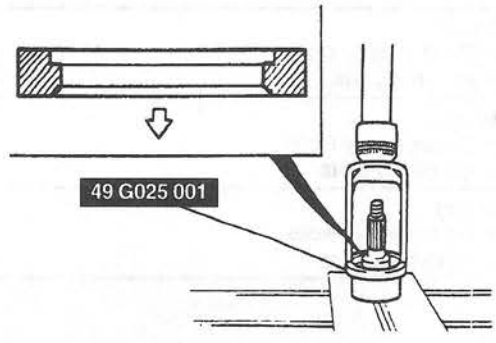

W6U313WBC

Boot Assembly Note

Note
- The wheel side and transaxle side boots are different.
- Use the specified grease supplied in the boot kit.

1. Fill the boot (wheel side) with the specified grease.

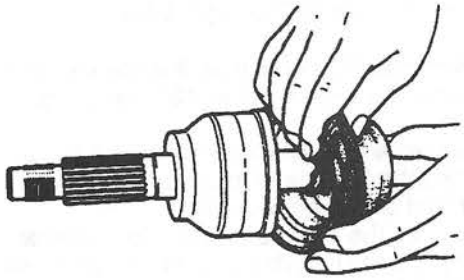

W6U313WBD

Grease amount
80—100 g {2.9—3.5 oz}

2. With the splines of the shaft still wrapped in tape from disassembly, install the boot.
3. Remove the tape.

Tripod Joint, Snap Ring Assembly Note

1. Align the marks and install the tripod joint by using a bar and a hammer.

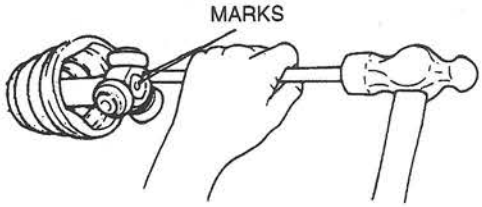

W6U313WBE

2. Install the new snap ring by using a snap-ring pliers.

Outer Ring Assembly Note

Note
- Use the specified grease supplied in the boot kit.

1. Fill the outer ring and boot (transaxle side) with the specified grease.

Grease amount
130—150 g {4.6—5.2 oz}

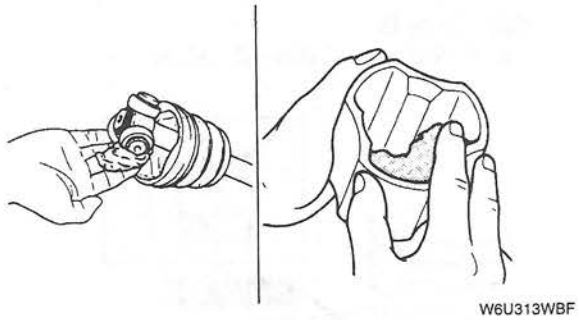

W6U313WBF

2. Install the outer ring.
3. Set the drive shaft to the standard length.

Standard length

mm {in}

Engine	Left side	Right side
FS	685.5—695.5 {26.99—27.38}	593.1—603.1 {23.36—23.74}
KL	643.6—653.6 {25.34—25.73}	593.1—603.1 {23.36—23.74}

4. Release any trapped air from the boots by carefully lifting up the small end of each boot with a clothwrapped screwdriver.

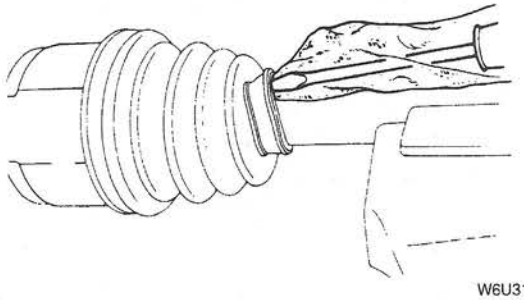

W6U313WBG

5. Verify that the drive shaft length is within the standard.

Boot Band Assembly Note

1. Adjust clearance A by turning the adjusting bolt of the **SST**.

Clearance A
2.9 mm {0.11 in}

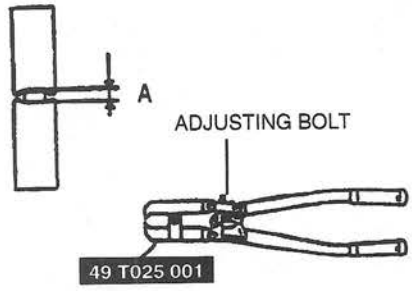

W6U313WBH

2. Crimp the wheel side small boot band by using the **SST**. Verify that clearance B is within the specification.

Clearance B
2.4—2.8 mm {0.095—0.110 in}

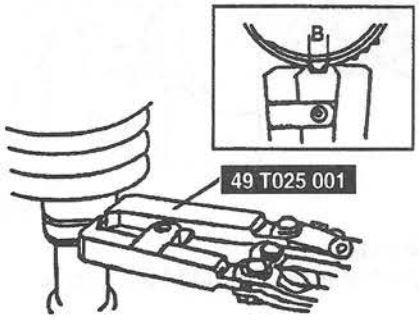

W6U313WBJ

If clearance B is more than the specification, reduce clearance A of the **SST** and crimp the boot again.
If clearance B is less than the specification, replace the boot band, increase clearance A of the **SST**, and crimp the new boot.

3. Verify that the boot band does not protrude from the boot band installation area. If it does, replace the boot band and repeat step 2.
4. Fill the boot with the repair kit grease.
5. Adjust clearance A by turning the adjusting bolt of the **SST**.

   Clearance A
   3.2 mm {0.13 in}

6. Crimp the wheel side big boot band by using the **SST**. Verify that clearance B is within the specification.

   Clearance B
   2.4—2.8 mm {0.095—0.110 in}

   If clearance B is more than the specification, reduce clearance A of the **SST** and crimp the boot again.
   If clearance B is less than the specification, replace the boot band, increase clearance A of the **SST** and crimp the new boot.
7. Verify that the boot band does not protrude from the boot band installation area. If it does, replace the boot band and repeat step 6.

03–50 TECHNICAL DATA

03 DRIVELINE/AXLE 03–50–1

03 DRIVELINE/AXLE

W6U350W01

Item			FS		KL	
			MTX	ATX	MTX	ATX
FRONT AXLE						
Maximum wheel bearing play	(mm {in})		0.1 {0.004}			
REAR AXLE						
Maximum wheel bearing play	(mm {in})		0.1 {0.004}			
DRIVE SHAFT						
Shaft length (Air in boot at atmospheric pressure)	(mm {in})	Right side	595.2—605.2 {23.44—23.82}	593.1—603.1 {23.36—23.74}	595.2—605.2 {23.44—23.82}	593.1—603.1 {23.36—23.74}
		Left side	643.7—653.7 {25.35—25.73}	685.5—695.5 {26.99—27.38}	643.7—653.7 {25.35—25.73}	643.6—653.6 {25.34—25.73}

03–60 SERVICE TOOLS

03 DRIVELINE/AXLE SST 03–60–1

03 DRIVELINE/AXLE SST

W6U360W01

49 T028 3A0 Ball joint puller set 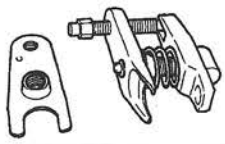 TT0283A0X	49 T028 303 Body (Part of 49 T028 3A0)  TT028303X	49 T028 304 Attachment (Part of 49 T028 3A0)  TT028304X
49 F026 103 Wheel hub puller 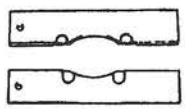 TF026103X	49 G033 107A Dust cover installer  TG033107A	49 V001 795 Oil seal installer 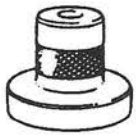 TV001795X
49 G033 1A1 Wheel hub puller 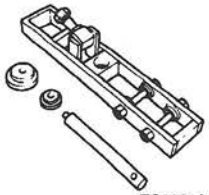 TG0331A1X	49 G033 102 Handle (Part of 49 G033 1A1) 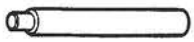 TG033102X	49 G033 105 Attachment (Part of 49 G033 1A1)  TG033105X
49 G033 106 Attachment (Part of 49 G033 1A1)  TG033106X	49 F027 0A1 Bearing installer set  TF0270A1X	49 F027 004 Attachment ϕ80 (Part of 49 F027 0A1)  TF027004X
49 F027 009 Attachment ϕ68 & ϕ77 (Part of 49 F027 0A1)  TF027009X	49 G030 795 Oil seal installer  TG030795X	49 G030 797 Handle (Part of 49 G030 795)  TG030797X
49 H028 204 Attachment 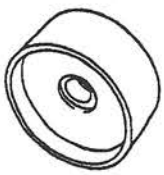 TH028204X	49 H034 201 Support block (Part of 49 H034 2A0)  TH034201X	49 F026 102 Bearing installer  TF026102X
49 H034 2A0 Lower arm bushing puller & installer 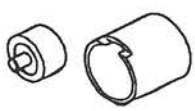 TH0342A0X	49 G030 796 Body (Part of 49 G030 795)  TG030796X	49 B025 005 Dust cover installer 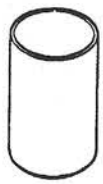 TB025005X

49 W027 003 Oil seal installer  TW027003X	49 H027 002 Bearing installer 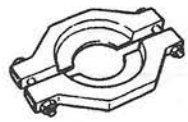 TH027002X	49 G017 5A0 Engine support  TG0175A0X
49 G030 455 Differential side gear holder 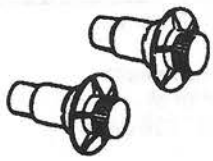 TG030455X	49 G025 001 Sensor rotor installer 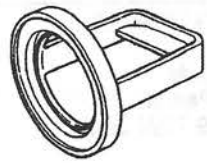 TG025001X	—

BRAKES

04
SECTION

TROUBLESHOOTING 04–01
GENERAL PROCEDURES 04–10
CONVENTIONAL BRAKE SYSTEM 04–11
PARKING BRAKE SYSTEM ... 04–12
ANTILOCK BRAKE SYSTEM . 04–13
TRACTION CONTROL SYSTEM (TCS) 04–14
TECHNICAL DATA 04–50
SERVICE TOOLS 04–60

04–01 TROUBLESHOOTING

FOREWORD 04–01–1
TROUBLESHOOTING NOTES 04–01–1
PRECAUTION 04–01–2
ANTILOCK BRAKE SYSTEM AND TRACTION CONTROL SYSTEM ON-BOARD DIAGNOSIS 04–01–2
On-Board Diagnostic (OBD) Test Description 04–01–2
On-Board Diagnostic Test 04–01–3
Reading DTCs Procedure 04–01–3
Clearing DTCs Procedure 04–01–4
PID/Data Monitor Procedure 04–01–4
Active Command Modes Procedure .. 04–01–4
Diagnostic Trouble Code Table 04–01–5
PID/DATA Monitor Table 04–01–6
Active Command Modes Table 04–01–6
Diagnostic Trouble Code Troubleshooting 04–01–7
ANTILOCK BRAKE SYSTEM AND TRACTION CONTROL SYSTEM SYMPTOM TROUBLESHOOTING 04–01–12
Diagnostic Index 04–01–12
Symptom Troubleshooting 04–01–14

FOREWORD

W6U401W01

- Refer to 00–00 HOW TO USE THIS MANUAL, Troubleshooting Procedure and thoroughly read it to understand the basic flow of troubleshooting in order to properly perform the procedures.

TROUBLESHOOTING NOTES

W6U401W02

- Before performing the Symptom Troubleshooting steps, perform the On-board Diagnostic Inspection and the ABS/TCS Hydraulic Unit System Inspection. To inspect the diagnostic trouble code, follow the Diagnostic Trouble Code Troubleshooting steps.
- For the steps that have an asterisk (*), inspect the connection of the connector with the terminal for any damage first. If the connection is poor, securely connect them, or repair or replace the appropriate parts as necessary. Wiggle and pull the wire harness to inspect each wire for corrosion, bent or loose terminals, or poor wire terminal crimps.

PRECAUTION

W6U401W03

When inspecting or servicing the ABS/TCS, note the following points:

1. The ABS warning light, the TCS indicator light and the TCS OFF light stay on until the ignition switch is turned to OFF under the following condition. When the rear wheel is locked by the jack up, stack or chassis roller, and only the front wheel is spinning for more than **60 seconds**.
2. The ABS warning light may flash when driving under the following conditions. In this case, the ABS is operating normally. Investigate and determine if the warning light illuminates before operation.
   (1) Parking brake is not fully released while driving.
   (2) Continuous application of the brake.
   (3) Sudden acceleration or deceleration.
   (4) Left/right or front/rear tires are in different conditions. Tire sizes other than those listed on the tire label, or tires with different radii, pressures or wear are used.
3. The TCS indicator light and the TSC OFF light illuminate under the following conditions. In this case, the TCS is operating normally. Investigate and determine if the lights illuminate before operation.
   (1) Using TCS OFF switch to cancel the TCS operation. Press the TCS OFF switch and the system is in standby mode.
   (2) The water temperature is below **0 °C {32 °F}**. In this case, the TCS OFF light stays lit until the engine is warm. (maximum 15 min.)
   (3) Battery is low. In this case, the TCS OFF light and ABS warning light stay lit until battery voltage is increased.
4. When performing a repair, if the ABS/TCS related connectors are disconnected and the ignition switch is turned to ON, the control module will detect a fault and record it as a malfunction.
5. After repairing the ABS wheel-speed sensor or pump motor, the ABS warning light may not go off when the ignition switch is turned to ON. In this case, drive the vehicle at a speed of more than **10 km/h {6.2 mph}**. After the ABS warning light goes off, reset the memory.
6. The ABS and TCS are composed of electrical and mechanical parts. It is necessary to treat them separately as electrical system and hydraulic system when performing troubleshooting.
   (1) Malfunctions in electrical system
      ① The ABS/TCS control module (ABS/TCS CM) has an on-board diagnostic function. With this function, the ABS warning light illuminates when there is a problem in the electrical system. Also, past and present malfunctions are recorded in the ABS/TCS CM. This function can find malfunctions that do not occur during periodic inspection. To find malfunctions with the ABS/TCS, perform the on-board diagnostic inspection. Erase the diagnostic trouble code in the ABS/TCS CM memory after repair. Also, if ABS/TCS related parts have been replaced, verify that the diagnostic trouble code has been erased afterwards.
      ② The ABS/TCS CM is composed of delicate electronic parts. If foreign materials get inside the CM, the CM will malfunction and ABS/TCS cannot operate. When replacing the CM, make sure there are no foreign materials in the CM's system connector.
   (2) Malfunctions in hydraulic system
      ① Hydraulic system malfunction is similar to a malfunction in normal brake system. It must be determined if a malfunction is in the ABS components or in normal brake system. This guide omits information for normal brake components and only contains information for ABS components (the ABS hydraulic unit).
      ② The ABS hydraulic unit contains delicate mechanical parts. If foreign materials get in, malfunction could occur, and the ABS will fail to operate. Also, if the normal brake operates but the ABS does not, the cause of the problem is very difficult to determine. Therefore, when servicing the ABS, such as changing brake fluid or detaching pipes, be careful that no foreign materials get inside.

ANTILOCK BRAKE SYSTEM AND TRACTION CONTROL SYSTEM ON-BOARD DIAGNOSIS

W6U401W04

On-Board Diagnostic (OBD) Test Description

- The OBD test checks the integrity and function of the ABS/TCS and outputs the test results when requested by the NGS tester. If also provides a quick end check of the ABS/TCS, is usually performed at the start of each diagnostic procedure with all accessories off and is performed at end of most troubleshooting tests for verification of repair and make sure no other faults were incurred while servicing a previous fault.
- The OBD test is divided into three test: Read/clear diagnostic results, PID monitor and record and active command modes.

Read/clear diagnostic results

- This function allows to read or clear DTCs in the ABS/TCS control module memory.

PID monitor and record

- This function allows to access certain data values, input signals, calculated values, and system status information.

Active command modes

- This function allows to control devices through the NGS.

On-Board Diagnostic Test
New generation star (NGS) tester hook-up procedure

Note
- Make sure that ignition switch is at OFF.

1. Insert the vehicle interface module and program card into the **SST** (NGS tester) control unit.
2. Plug the NGS OBDII adapter into the interface module and the connector into the vehicle data link connector (DLC) located under the dash to left of the steering shaft.
3. Plug the **SST** (NGS tester) power cable into the cigarette lighter or use a battery hook-up adapter.

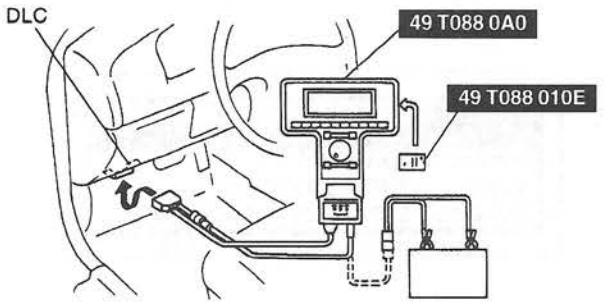

W6U401WA1

4. Listen for a double beep. The **SST** (NGS tester) is now initialized. Begin the functional test of ABS/TCS.

Reading DTCs Procedure
1. Perform the necessary vehicle preparation and visual inspection. Hook-up the **SST** (NGS tester) to the vehicle.

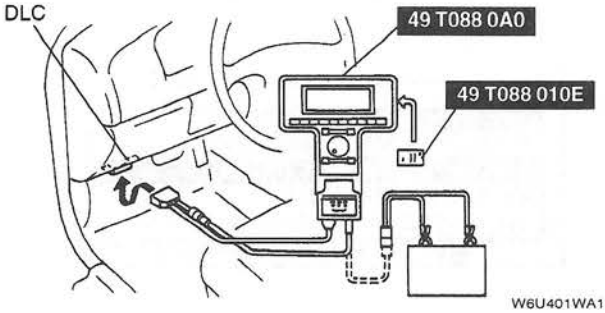

W6U401WA1

2. Move the cursor to **VEHICLE AND ENGINE SELECTION.**

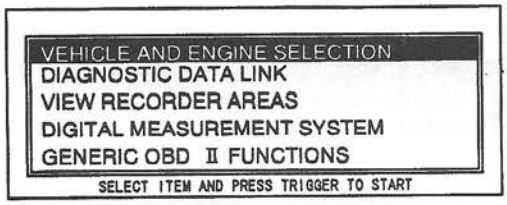

W6U401WA3

3. Move the cursor to **SELECT NEW VEHICLE YEAR & MODEL.** Press the trigger key to enter this selection.

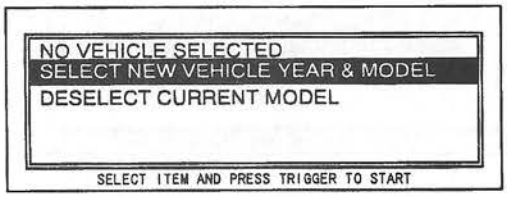

W6U401WA4

4. Move the cursor to **1998 — VIN #10:W.** Press the trigger key to enter this selection.

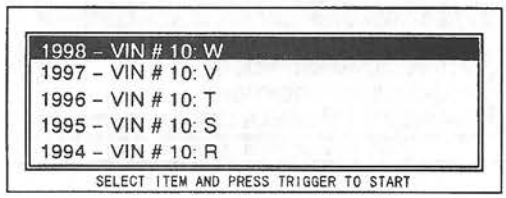

W6U401WB6

5. Move the cursor to appropriate model. Press the trigger key to enter this selection.
6. The vehicle selection screen showing the selected vehicle will be displayed. Move the cursor to the vehicle selected. Press the trigger key.

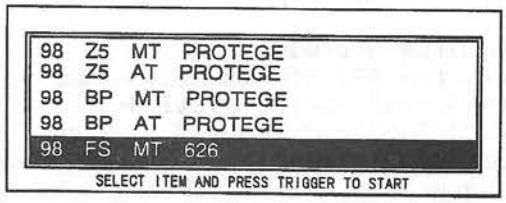

W6U401WA5

7. Move the cursor to **DIAGNOSTIC DATA LINK** in the main menu screen. Press the trigger key to enter into menu system diagnostics.

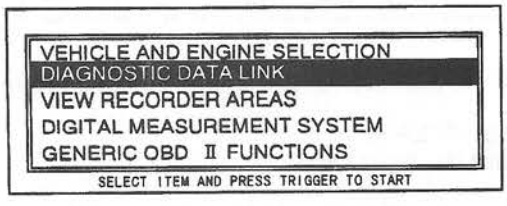

W6U401WA6

8. Move the cursor to **ABS-ANTI LOCK BRAKE MODULE**. Press the trigger.

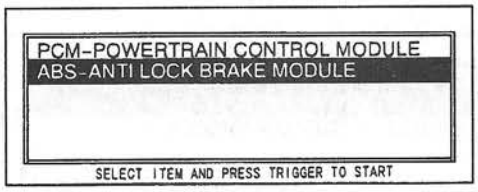

W6U401WA7

9. Move the cursor to **DIAGNOSTIC TEST MODE.** Press the trigger key to enter this selection.

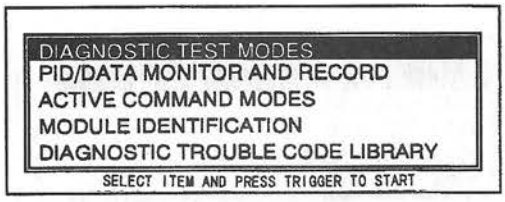

W6U401WA8

10. Move the cursor to **READ/CLEAR DIAGNOSTIC TEST RESULTS**. Press the trigger key to enter this selection.
11. Press START.
12. If the system is normal, **SYSTEM PASSED. (NO DTCS AVAILABLE)** will be indicated. If any DTC is indicated, follow the appropriate DTC troubleshooting chart.
13. After completion of repairs, clear DTCs.

Clearing DTCs Procedure

1. Connect the **SST** (NGS tester) to the data link connector and select **READ/CLEAR DIAGNOSTIC TEST RESULTS** in the same procedure as the reading DTCs procedure. Press the trigger key to enter this selection.

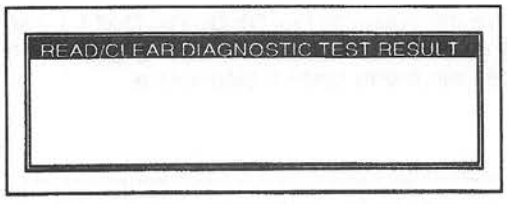

W6U401WA9

2. Press CLEAR.
3. Press the trigger key.

Note

- After repairing the ABS wheel-speed sensor or pump motor, the ABS warning light may not go off when ignition is switched to ON. In this case, drive the vehicle at a speed of more than **10 km/h {6.2 mph}**. After the ABS warning light goes off, reset the memory.

PID/Data Monitor Procedure

1. Select **ABS-ANTILOCK BRAKE SYSTEM** in the same procedure as the reading DTCs procedure.
2. Move the cursor to **PID/DATA MONITOR AND RECORD**. Press the trigger key to enter this selection.

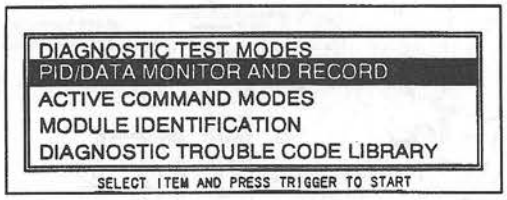

W6U401WB0

3. Move the cursor to PID values to view. Press the trigger key.
4. Press START.

Active Command Modes Procedure
Controlling motor relay and solenoid valves

1. Select **ABS-ANTILOCK BRAKE SYSTEM** in the same procedure as the reading DTCs procedure.
2. Move the cursor to **ACTIVE COMMAND MODES**. Press trigger key to enter this selection.

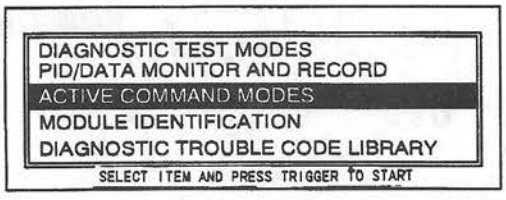

W6U401WB1

3. Press the trigger key to enter **ABS OUTPUT CONTROL**.

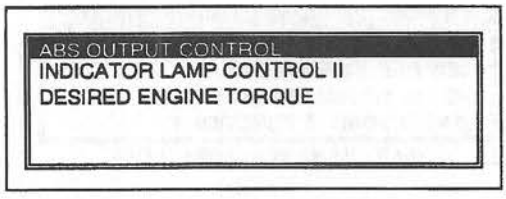

W6U401WB2

4. Move the cursor to **EVAC FL: OFF**. Press the trigger key to make EVAC ON.

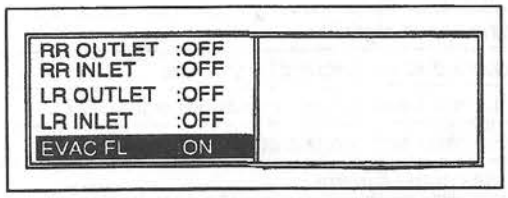

W6U401WB5

5. Move the cursor to appropriate item and press the trigger key to make it ON.

Controlling indicator lights

1. Select **ACTIVE COMMAND MODES** in the same procedure as the "Controlling motor relay and solenoid valves". Press the trigger key.
2. Move the cursor to **INDICATOR LAMP CONTROL II** and press the trigger key.

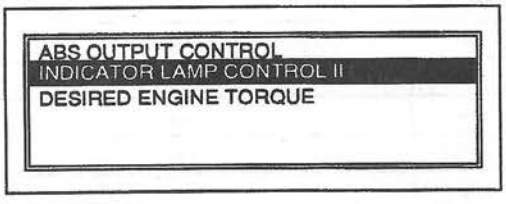

W6U401WB3

3. Move the cursor to appropriate item and press the trigger key to make it ON.

Controlling engine torque

1. Select **ACTIVE COMMAND MODES** in the same procedure as the "Controlling motor relay and solenoid valves". Press the trigger key.
2. Move cursor to **DESIRED ENGINE TORQUE** and press the trigger key.

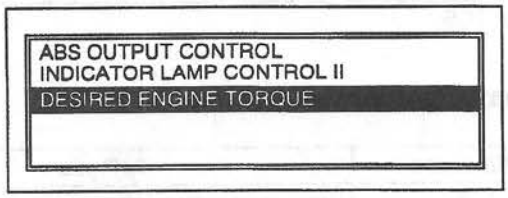

W6U401WB4

3. **ENG TQR** will be indicated. Press the trigger key.
4. Control the engine torque to the desired value by turning the dial.

04

Diagnostic Trouble Code Table

DTC	Display on the NGS	Diagnosis component
B1318	BATTERY VOLTAGE–LOW	Battery voltage
B1342	ECU–DEFECTIVE	ABS control module
B1484	BRAKE PEDAL INPUT–OPEN CIRCUIT	Brake switch harness
C1145	RF SPEED SENSOR–INPUT CKT FAILURE	Right front ABS wheel-speed sensor
C1155	LF SPEED SENSOR–INPUT CKT FAILURE	Left front ABS wheel-speed sensor
C1165	RR SPEED SENSOR–INPUT CKT FAILURE	Right rear ABS wheel-speed sensor
C1175	LR SPEED SENSOR–INPUT CKT FAILURE	Left rear ABS wheel-speed sensor
C1222	WHEEL SPEED–MISMATCH	ABS wheel-speed sensor
C1210	RF DUMP VALVE COIL–CKT FAILURE	Solenoid valve (RF AV)
C1214	RF ISOL VALVE COIL–CKT FAILURE	Solenoid valve (RF EV)
C1194	LF DUMP VALVE COIL–CKT FAILURE	Solenoid valve (LF AV)
C1198	LF ISOL VALVE COIL–CKT FAILURE	Solenoid valve (LF EV)
C1246	RR DUMP VALVE COIL–CKT FAILURE	Solenoid valve (RR AV)
C1254	RR ISOL VALVE COIL–CKT FAILURE	Solenoid valve (RR EV)
C1242	LR DUMP VALVE COIL–CKT FAILURE	Solenoid valve (LR AV)
C1250	LR ISOL VALVE COIL–CKT FAILURE	Solenoid valve (LR EV)
C1148	RF SPEED SENSOR–COHERENCY FAULT	Right front ABS wheel-speed sensor/sensor rotor
C1158	LF SPEED SENSOR–COHERENCY FAULT	Left front ABS wheel-speed sensor/sensor rotor
C1168	RR SPEED SENSOR–COHERENCY FAULT	Right rear ABS wheel-speed sensor/sensor rotor

DTC	Display on the NGS	Diagnosis component
C1178	LR SPEED SENSOR–COHERENCY FAULT	Left rear ABS wheel-speed sensor/sensor rotor
C1266	ABS POWER RELAY VALVE–CKT FAILURE	Solenoid valve power supply
C1095	HYDRAULIC PUMP MOTOR–CKT FAILURE	Pump motor relay
C1117*	RPM INPUT CIRCUIT FAILURE	Engine speed signal line
C1118*	TRAC CONTROL IND TORQ REDUC CKT FAIL	Torque reduction (request) signal line
C1119*	TRAC CONTROL ACT TORQ REDUC CKT FAIL	Torque reduction (engine condition) signal line
U2012*	COMMUNICATION BUS ERROR	Torque reduction (engine condition) signal line
U2021*	INVALID/FAULTED DATA RECEIVED	Engine control system

* : For TCS

PID/DATA Monitor Table

PID name	Definition	Unit	Digit
BOO_ABS	Brake light switch status	—	ON/OFF
PMP_RLY	Pump motor relay status	—	ON/OFF
VLV_RLY	Valve relay status	—	ON/OFF
LF_WSPD	Front left wheel speed sensor input	MPH	—
RF_WSPD	Front right wheel speed sensor input	MPH	—
LR_WSPD	Rear left wheel speed sensor input	MPH	—
RR_WSPD	Rear right wheel speed sensor input	MPH	—
PART NO.1	Module part number (Identification code)	—	—
PART NO.2	Module part number (Part serial number)	—	—
PART NO.3	Module part number (Suffix)	—	—
ENG RPM*	Engine speed	RPM	—
MMI SIG*	Torque reduction (engine condition) signal	%	—
ENG TQ*	Engine torque actual value	Nm	—
ENG TQR*	Engine torque reduction	Nm	—
B+	Ignition voltage	V	—
TCS OFF*	Voltage at TCS OFF switch	mV	—

* : For TCS

Active Command Modes Table

Command name	Definition	Operation
PMP RLY	Pump motor relay	ON/OFF
RF AV	Right front AV	ON/OFF
RF EV	Right front EV	ON/OFF
LF AV	Left front AV	ON/OFF
LF EV	Left front EV	ON/OFF
RR AV	Right rear AV	ON/OFF
RR EV	Right rear EV	ON/OFF
LR AV	Left rear AV	ON/OFF
LR EV	Left rear EV	ON/OFF
TCS OFF*	TCS OFF light	ON/OFF
ABS LMP	ABS warning light	ON/OFF
TCS LMP*	TCS indicator light	ON/OFF
ENG TQR*	Engine torque	Fix engine torque amount

* : For TCS

Diagnostic Trouble Code Troubleshooting

Caution
- **When attaching the tester lead to the PCM, the SST must be used. Refer to 01–40B PCM INSPECTION [KL].**

DTC B1318	ABS control module power supply
DESCRIPTION	Voltage sensor detects low voltage
POSSIBLE CAUSE	• Malfunction of generator • Malfunction of related wiring harness • Depleted battery

STEP	INSPECTION		ACTION
1	With engine idling, is battery terminal voltage okay?	Yes	Make sure that battery terminal connection is okay. Go to next step.
		No	Charge or replace battery.
2	Are generator and drive belt tension okay? ☞ 01–17 GENERATOR INSPECTION	Yes	Go to next step.
		No	Adjust drive belt tension as necessary. Replace generator and/or drive belt as necessary.
3	Is DTC for engine control system obtained? ☞ 01–01B ENGINE ON-BOARD DIAGNOSIS	Yes	Follow inspection procedures for engine control system.
		No	Go to next step.
4	Inspect connection of Z (power supply) and D (ground) connector pins for ABS CM. Is it okay?	Yes	Go to next step.
		No	Repair ABS CM connector.
5	Is voltage of ABS CM harness between Z and D **above 10 V** when engine is idling?	Yes	Go to next step.
		No	Go to step 7.
6	With IG SW OFF, is resistance between D of ABS CM harness and secure ground **less than 5 Ω**?	Yes	Go to next step.
		No	Repair harness between D and ground point for open circuit.
7	Remove ABS, A/B fuse (10 A). Is resistance between Z of ABS CM harness and secure ground **less than 10 kΩ**?	Yes	Repair harness between Z and J/B fuse box for short to ground.
		No	Go to next step.
8	Is resistance between Z of ABS CM harness and ABS, A/B fuse (10 A) **less than 5 Ω**?	Yes	Go to next step.
		No	Repair harness between Z and fuse for open circuit.
9	Erase DTC and recheck for DTC with engine is idling. Is DTC B1318 obtained?	Yes	Replace ABS CM.
		No	There was a temporarily low battery voltage.

DTC B1342	ABS control module
DESCRIPTION	The on-board diagnostic program detects computer malfunction
POSSIBLE CAUSE	• Malfunction of control module

STEP	INSPECTION		ACTION
—	—	—	Replace ABS CM.

DTC B1484	Brake switch harness
DESCRIPTION	When open circuit detected in following harnesses • Between brake switch and ABS CM • Between ABS CM and brake light
POSSIBLE CAUSE	• Malfunction of related wiring harness

STEP	INSPECTION		ACTION
1	Inspect harness between brake light and ABS CM. • Open circuit Is harness normal?	Yes	Go to next step.
		No	Repair harness.

STEP	INSPECTION		ACTION
2	Erase DTC, and recheck for DTC. Is DTC B1484 obtained?	Yes	Replace ABS CM.
		No	There was temporarily poor contact in wiring harness or connector.

DTC C1095	ABS motor, motor relay
DESCRIPTION	Motor monitor signal does not track in response to motor relay at ON/OFF command
POSSIBLE CAUSE	• Malfunction of ABS motor or motor relay • Malfunction of related wiring harness

STEP	INSPECTION		ACTION
1	Is voltage at B of ABS CM connector 10 V or more?	Yes	Go to next step.
		No	Go to step 6.
2	Is ABS (60 A) fuse okay?	Yes	Go to next step.
		No	Replace fuse.
3	Is resistance between B of ABS CM harness connector and secure ground **less than 10 kΩ**?	Yes	Repair harness between B and fuse for short to ground.
		No	Go to next step.
4	Is resistance between B of ABS CM harness connector and ABS (60 A) fuse **5 Ω or less**?	Yes	Go to next step.
		No	Repair harness between B and fuse for open circuit.
5	Is resistance between A of ABS CM harness connector and secure ground **less than 5 Ω**?	Yes	Go to next step.
		No	Repair harness between A and joint box (ground) for open circuit.
6	• Connect the **SST** (NGS) • Select ACTIVE COMMAND MODES • Select PID PMP RLY • Activate PID ON Does pump motor function when commanded to ON?	Yes	System is normal. Erase DTC and observe symptom.
		No	Replace HU/CM component.

DTC	C1145 C1155 C1165 C1175	Right front ABS wheel-speed sensor Left front ABS wheel-speed sensor Right rear ABS wheel-speed sensor Left rear ABS wheel-speed sensor
DESCRIPTION	When open circuit is detected	
POSSIBLE CAUSE	• Open circuit of ABS wheel-speed sensor	

STEP	INSPECTION		ACTION
1	With ABS CM is disconnected, inspect resistance between following sensor terminals of harness connector. RF: P–O, LF: Q–R, RR: M (N)*–L, LR: T–S **Resistance** **1.28—1.92 kΩ** Is it as specified?	Yes	Go to step 2 of DTC C1222 chart.
		No	Go to next step.
2	Remove sensor connector and inspect resistance between sensor terminals. **Resistance** **1.28—1.92 kΩ** Is it as specified?	Yes	Repair harness between ABS CM connector and ABS wheel-speed sensor connector.
		No	Replace ABS wheel-speed sensor.

* : Models with TCS

DTC	C1148 C1158 C1168 C1178	Right front ABS wheel-speed sensor/sensor rotor Left front ABS wheel-speed sensor/sensor rotor Right rear ABS wheel-speed sensor/sensor rotor Left rear ABS wheel-speed sensor/sensor rotor
DESCRIPTION		Wheel speed signal is out of specification during a vehicle is stopped or starting
POSSIBLE CAUSE		• Open or short circuit of ABS wheel-speed sensor • Damaged ABS sensor rotor

STEP	INSPECTION		ACTION
1	Inspect clearance between sensor and rotor, and output voltage. ☞ 04–13 FRONT ABS WHEEL-SPEED SENSOR INSPECTION Is sensor okay?	Yes	Go to next step.
		No	Replace ABS wheel-speed sensor.
2	With ABS CM is disconnected, inspect resistance between following sensor terminals of harness connector. RF: P–O, LF: Q–R, RR: M (N)*–L, LR: T–C **Resistance** **1.28—1.92 kΩ** Is it as specified?	Yes	Go to next step.
		No	Repair harness between sensor and ABS CM.
3	With ABS CM is disconnected, inspect resistance between sensor terminals and ground. RF: P–D, LF: Q–D, RR: M (N)*–D, LR: T–D **Resistance** **Less than 5 Ω** Are they as specified?	Yes	Go to step 2 of DTC 1222 chart.
		No	There is a short to ground. Inspect short point and repair it as necessary.

* : Models with TCS

DTC	C1222	ABS wheel-speed sensor
DESCRIPTION		Wheel speed signal is out of specification
POSSIBLE CAUSE		• Malfunction of ABS wheel-speed sensor • Damaged ABS sensor rotor

STEP	INSPECTION		ACTION
1	Inspect clearance between sensor and rotor, and output voltage. ☞ 04–13 FRONT ABS WHEEL-SPEED SENSOR INSPECTION Is sensor okay?	Yes	Go to next step.
		No	Replace ABS wheel-speed sensor.
2	Inspect wheel bearing play. ☞ 03–11 FRONT WHEEL BEARING PLAY INSPECTION Is wheel bearing play within specification? **Wheel bearing play** **0.05 mm {0.002 in}**	Yes	Go to next step.
		No	Repair or replace damaged part.
3	Visually inspect sensor rotor for missing, deformation and obstruction of teeth. Is there looseness or damage?	Yes	Replace ABS sensor rotor.
		No	Go to next step.
4	• Connect the **SST** (NGS) • Select PID WSPD of appropriate wheel • Drive vehicle and note PID • Is PID active?	Yes	System is normal.
		No	Inspect poor connection in ABS CM connector and poor contact in ABS CM wheel-speed sensor terminals. Repair or replace terminal as necessary.

DTC	C1210	Right front pressure reduction valve
	C1214	Right front pressure retension valve
	C1194	Left front pressure reduction valve
	C1198	Left front pressure retension valve
	C1246	Right rear pressure reduction valve
	C1254	Right rear pressure retension valve
	C1242	Left rear pressure reduction valve
	C1250	Left rear pressure retension valve
DESCRIPTION	Solenoid monitor signal does not track in response to solenoid to ON/OFF command	
POSSIBLE CAUSE	• Malfunction of solenoid valve	

STEP	INSPECTION		ACTION
—	—	—	Replace HU/CM component.

DTC C1266	Valve relay power supply
DESCRIPTION	Three or more valve systems are detected to be faulty among eight systems
POSSIBLE CAUSE	• Malfunction of valve relay • Malfunction of related wiring harness

STEP	INSPECTION		ACTION
1	Is ABS fuse (20 A) okay?	Yes	Go to next step.
		No	Replace ABS fuse (20 A).
2	Is resistance between D and secure ground **less than 5 Ω**?	Yes	Go to next step.
		No	Repair harness between D and ground point for open circuit.
3	Is resistance between C of ABS CM harness connector and secure ground **less than 10 kΩ**?	Yes	Repair harness between C and ABS fuse (20 A) for short to ground.
		No	Go to next step.
4	Is resistance between C of ABS CM harness connector and ABS fuse (20 A) **less than 5 Ω**?	Yes	Replace ABS CM.
		No	Repair harness between C and ABS fuse (20 A) for open circuit.

DTC C1117	Engine speed signal line
DESCRIPTION	Torque reduction (engine condition) signal is normal and engine speed is less than specification
POSSIBLE CAUSE	• Malfunction of engine control system • Malfunction of related wiring harness

STEP	INSPECTION		ACTION
1	• Connect **SST** (NGS). • Select PID/DATA MONITOR. • Select ENG RPM. With engine idling, is engine speed **400—1500 rpm**?	Yes	Go to step 4.
		No	Go to next step.
2	With ABS/TCS CM connector disconnected and engine idling, is duty ratio between AD (+) and D (–) within specification? **Duty ratio: 20—80%** **Dwell meter reading: 18—72° (4-cycle, 4-cylinder)**	Yes	Go to step 4.
		No	Go to next step.
3	With engine idling, is duty ratio between 48 (+) and 91 (–) of PCM within specification? **Duty ratio: 20—80%** **Dwell meter reading: 18—72° (4-cycle, 4-cylinder)**	Yes	There was temporarily poor contact in wiring harness or connector. Repair or replace as necessary.
		No	Replace PCM.
4	Is DTC present failure?	Yes	Replace ABS/TCS CM.
		No	There was temporarily poor contact in wiring harness or connector. Repair or replace as necessary.

DTC C1118	Torque reduction (request) signal line
DESCRIPTION	Received the torque reduction (engine condition) signal that indicates PCM detects malfunction of torque reduction (request) signal line
POSSIBLE CAUSE	• Malfunction of ABS/TCS CM • Malfunction of related wiring harness

STEP	INSPECTION		ACTION
1	• Connect **SST** (NGS). • Select PID/DATA MONITOR. • Select MMI SIG. With engine idling, is duty ratio **93—97%**?	Yes	Go to next step.
		No	Go to step 4.
2	With ABS/TCS CM connector disconnected and IG SW at ON, is voltage between X (+) and D (–) of connector **5 V or more**?	Yes	Go to next step.
		No	Inspect wiring harness between X of ABS/TCS CM and 11 of PCM for open or short. Repair or replace as necessary.
3	With engine idling, is duty ratio between 11 (+) and 91 (–) of PCM within specification? **Duty ratio: 70—99%** **Dwell meter reading: 0.9—27° (4-cycle, 4-cylinder)**	Yes	Replace PCM.
		No	Replace ABS/TCS CM.
4	Is DTC present failure?	Yes	Replace ABS/TCS CM.
		No	There was temporarily poor contact in wiring harness or connector. Repair or replace as necessary.

DTC C1119 U2012	Torque reduction (engine condition) signal line Torque reduction (engine condition) signal line
DESCRIPTION	• Torque reduction (engine condition) signal is out of specification • Cannot distinguish whether the vehicle is ATX or MTX
POSSIBLE CAUSE	• Malfunction of PCM • Malfunction of related wiring harness

STEP	INSPECTION		ACTION
1	• Connect **SST** (NGS). • Select PID/DATA MONITOR. • Select MMI SIG. With engine idling, is duty ratio **15—70%**?	Yes	Go to step 4.
		No	Go to next step.
2	With PCM connector disconnected and IG SW at ON, is voltage between 82 (+) and 91 (–) of PCM **5 V or more**?	Yes	Go to next step.
		No	Inspect wiring harness between 82 of PCM and AA of ABS/TCS CM. Repair or replace as necessary.
3	With PCM connector connected and engine idling, is duty ratio between 82 (+) and 91 (–) of PCM within specification? **Duty ratio: 15—70%** **Dwell meter reading: 27—76.5° (4-cycle, 4-cylinder)**	Yes	Go to step 4.
		No	Replace PCM.
4	Is DTC present failure?	Yes	Replace ABS/TCS CM.
		No	There was temporarily poor contact in wiring harness or connector. Repair or replace as necessary.

DTC U2021	Engine control system		
DESCRIPTION	Torque reduction (engine condition) signal is normal, and received that signal indicates that PCM cannot excute torque reduction		
POSSIBLE CAUSE	• Malfunction of engine control system		
STEP	INSPECTION		ACTION
—	—	—	Perform engine on-board diagnostic inspection. ☞ 01–01B ENGINE ON-BOARD DIAGNOSIS

ANTILOCK BRAKE SYSTEM AND TRACTION CONTROL SYSTEM SYMPTOM TROUBLESHOOTING

W6U401W05

Diagnostic Index

- Use the following table to determine the problem and go to the appropriate "Symptom Troubleshooting."

(For ABS)

No.	TROUBLESHOOTING ITEM	DESCRIPTION
1	When IG switch is turned to ON, ABS warning light does not illuminate within 2—4 seconds.	• Burnt out bulb, or short/open in harness • Malfunction in instrument cluster (print board) • Malfunction in ABS CM **Note** • After IG is turned to ON, it is normal for the ABS warning light to illuminate within 2—4 seconds.
2	When IG switch is turned to ON, ABS warning light illuminates after more than 2—4 seconds.	• Malfunction in ABS system • Low battery voltage • Ignition switch malfunction • Generator malfunction • Improper drive belt tension • Poor connection in ABS CM harness • Malfunction of ABS warning light harness • Malfunction of instrument cluster (print board) • ABS CM inoperative
3	When IG switch is turned to ON, ABS warning light goes on and off intermittently.	• Low battery voltage • Poor ABS CM ground • Malfunction of ABS warning light harness • Malfunction of instrument cluster (print board) • Improper bulb installation • Poor connection in ABS harness connector • Malfunction in ABS CM
4	ABS warning light illuminates normally, but system has problem. • Spongy brake feeling • Poor braking • Brakes pull to one side	• Brake pedal and brake master cylinder attachment incorrect • Air in brake system • Malfunction of master cylinder • Malfunction of proportioning valve • Leakage of brake fluid

(For ABS/TCS)

No.	TROUBLESHOOTING ITEM	DESCRIPTION
5	When IG switch is turned to ON, all following lights illuminate improperly: • ABS warning light • TCS indicator light • TCS OFF light	• Malfunction in ABS wiring system • Malfunction of ABS/TCS CM
6	When IG switch is turned to ON, both following lights illuminate improperly: • TCS indicator light • TCS OFF light	• Malfunction of ABS/TCS CM or PCM • Malfunction of harness on TCS indicator light or TCS OFF light • Communication error between TCS CM and PCM • Malfunction of engine control system

No.	TROUBLESHOOTING ITEM	DESCRIPTION
7	When IG switch is turned to ON, both following lights illuminate improperly: • ABS warning light • TCS OFF light	• Low battery voltage • Poor connection or disconnection of ABS/TCS CM connector • Poor GND of ABS/TCS CM • Malfunction of ABS/TCS CM
8	When IG switch is turned to ON, only TCS OFF light illuminates.	• Malfunction of TCS OFF switch • Short to GND in TCS OFF light harness • Malfunction of ABS/TCS CM • Malfunction of instrument cluster **Note** • When the engine coolant temperature is below **0 °C {32 °F}**, the TCS OFF light stays lit until the engine warms up to normal operating temperature. (**maximum 15 min.**) If the light goes off after warming up, the system is normal. • The TCS OFF light illuminates at key on engine off. (Inspect again after engine is started.)
9	TCS indicator light flashes when TCS is not activated during driving.	• Improper tire size or pressure • Malfunction of ABS wheel-speed sensor, and/or sensor rotor • Short to GND in TCS indicator light harness intermittently **Note** • When TCS is activated, it is normal for the TCS indicator light to flash and thus the system is normal. However if this occurs frequently, inspect items above. • TCS activates easily when driving with different size tires or when tire air pressure is low. When TCS is activated, TCS will not be canceled until TCS operation is completed even if the TCS OFF switch is depressed.
10	When IG switch is turned to ON, only TCS OFF light illuminates.	• Malfunction of instrument cluster • Malfunction of ABS/TCS CM • Short to GND in TCS indicator light harness
11	TCS indicator light and/or TCS OFF light had illuminated in the past and they do not any more.	• Malfunction of TCS indicator light, TCS OFF light, or TCS OFF switch harness • Communication error between TCS CM and PCM, or past malfunction of engine control system **Note** • When the engine coolant temperature is below **0 °C {32 °F}**, the TCS OFF light stays lit until the engine warms up at normal operating temperature. (**maximum 15 min.**) If the light goes off after warming up, the system is normal. • The TCS OFF light is illuminated at key on engine off. (Inspect again after engine is started.)
12	Insufficient TCS operation.	• Improper tire size and tire air pressure • Malfunction of PCM • Malfunction of ABS/TCS system **Note** • TCS operation will be deactivated before the engine speed is too low.
13	When IG switch is turned to ON, all following lights do not illuminate. • ABS warning light • TCS indicator light • TCS OFF light	• Burnt out bulb or short in related harness • Poor ABS CM ground • Malfunction of power supply circuit of ABS CM • Malfunction of ABS CM

Symptom Troubleshooting

Caution
- **For the steps which have an asterisk (*), inspect the connection of the connector with the terminal and for any damage first. If the connection is poor, securely connect them, or repair or replace the appropriate parts as necessary. Wiggle and pull the wire harness to inspect each wire for corrosion, bent or loose terminals and poor wire terminal crimps.**

1	**When IG switch is turned to ON, ABS warning light does not illuminate within 2—4 seconds**		
[TROUBLESHOOTING HINTS] • Burnt out bulb, or short/open in harness • Malfunction in instrument cluster (print board) • Malfunction in ABS CM			
STEP	**INSPECTION**		**ACTION**
1	Will other indicator lights illuminate when IG switch is turned to ON?	Yes	Verify that diagnostic trouble code is in memory. If any diagnostic trouble code is retrieved, go to ABS/TCS On-Board Diagnosis. If no DTC is retrieved, go to next step.
		No	Inspect meter fuse. If fuse is melted, inspect for short to ground between ignition switch and fuse panel, or fuse panel and warning light.
2*	Inspect harnesses of ABS warning light: meter fuse and warning light, warning light and ABS CM. Is there continuity?	Yes	Go to next step.
		No	Repair or replace harness.
3	Inspect ABS warning light bulb. Is it okay?	Yes	Go to next step.
		No	Replace bulb.
4	Inspect the instrument cluster (print board). Is it okay?	Yes	Go to next step.
		No	Replace instrument cluster (print board).
5*	Inspect continuity between ABS CM on D terminal and ground. Is there continuity?	Yes	Go to next step.
		No	Repair harness.
6*	Turn the ignition switch to ON. Inspect voltage of ABS CM on Z terminal. Is voltage greater than **10 V**?	Yes	Replace ABS CM.
		No	Repair or replace harness.

Caution
- **Recheck the diagnostic trouble code after repair completion.**

Note
- The ABS warning light normally illuminates for 2—4 seconds after ignition switch is turned to ON.
- If any symptoms have occurred in the past but are now okay, malfunction of related harness could be the possible cause and thus ABS CM is normal.

2	When IG switch is turned to ON, ABS warning light illuminates after more than 2—4 seconds

[TROUBLESHOOTING HINTS]
- Malfunction in ABS system
- Low battery voltage
- Ignition switch malfunction
- Generator malfunction
- Improper drive belt tension
- Poor connection in ABS CM harness
- Malfunction of ABS warning light harness
- Malfunction of instrument cluster (print board)
- ABS CM inoperative

STEP	INSPECTION		ACTION
1	Drive the vehicle at more than **10 km/h {6.2 mph}** for **5 seconds**. Did the light go off?	Yes	System is okay. Delete memory.
		No	If any other electrical component is inoperative while ABS warning light stays on, inspect ignition switch. Go to next step.
2	Perform on-board diagnostic inspection using NGS tester. Is the diagnostic trouble code displayed?	Yes	Go to ABS/TCS On-Board Diagnosis.
		No	Go to next step.
3	Is ABS CM harness connector securely connected to ABS CM?	Yes	Go to next step.
		No	Connect it securely.
4*	Is there any short circuit between ABS CM and ABS warning light?	Yes	Repair or replace the harness, between warning light and ABS CM.
		No	Go to next step.
5	Inspect print board in instrument cluster. Is it okay?	Yes	Replace ABS CM.
		No	Replace instrument cluster (print board).

Caution
- **Recheck the diagnostic trouble code after repair completion.**

Note
- The ABS warning light normally illuminates for 2—4 seconds after ignition switch is turned to ON.
- If any symptoms have occurred in the past but are now okay, malfunction of related harness could be the possible cause and thus ABS CM is normal.

3	When IG switch is turned to ON, ABS warning light goes on and off intermittently

[TROUBLESHOOTING HINTS]
- Low battery voltage
- Poor ABS CM ground
- Malfunction of ABS warning light harness
- Malfunction of instrument cluster (print board)
- Improper bulb installation
- Poor connection in ABS harness connector
- Malfunction in ABS CM

STEP	INSPECTION		ACTION
1	Is ABS CM harness connector securely connected to ABS CM?	Yes	Go to next step.
		No	Connect it securely.
2*	Is harness between ABS CM and ABS warning light okay? (Inspect for short to ground)	Yes	Go to next step.
		No	Repair or replace the defective harness (short to GND) between warning light and ABS CM.
3*	Disconnect the ABS CM connector. Is there continuity between ABS CM (A) terminal or (D) terminal and body ground?	Yes	Go to next step.
		No	Repair or replace harness.
4	Is the bulb securely installed?	Yes	Go to next step.
		No	Install it securely.

STEP	INSPECTION		ACTION
5	Inspect instrument cluster (print board) Is it okay?	Yes	Replace ABS CM.
		No	Replace instrument cluster (print board).

Caution
- **Recheck the diagnostic trouble code after repair completion.**

Note
- The ABS warning light normally illuminates for 2—4 seconds after ignition switch is turned to ON.
- If any symptoms have occurred in the past but are now okay, malfunction of related harness could be the possible cause and thus ABS CM is normal.

4	**ABS warning light illuminates normally, but system has problem**		
[TROUBLESHOOTING HINTS] • Brake pedal and brake master cylinder attachment incorrect • Air in brake system • Malfunction of master cylinder • Malfunction of proportioning valve • Leakage of brake fluid			
STEP	**INSPECTION**		**ACTION**
1	Are pedal and master cylinder attachment properly installed?	Yes	Go to next step.
		No	Install properly.
2	Is there air in the brake system?	Yes	Bleed the air.
		No	Go to next step.
3	Is brake piping of ABS hydraulic unit okay?	Yes	Inspect the following conventional brake parts: • Master cylinder • Power brake unit • Proportioning valve, etc.
		No	Install the piping properly.

Caution
- **Recheck the diagnostic trouble code after repair completion.**

Note
- The ABS warning light normally illuminates for 2—4 seconds after ignition switch is turned to ON.
- If any symptoms have occurred in the past but are now okay, malfunction of related harness could be the possible cause and thus ABS CM is normal.

5	**When IG switch is turned to ON, all lights illuminate**		
[TROUBLESHOOTING HINTS] • Malfunction in ABS wiring system • Malfunction of ABS/TCS CM			
STEP	**INSPECTION**		**ACTION**
1	Perform ABS hydraulic unit on-vehicle inspection. Is ABS hydraulic unit okay?	Yes	Go to next step.
		No	Service as necessary.
2*	Are the harness between ABS/TCS CM and each light okay (No short to GND)?	Yes	Inspect instrument meter.
		No	Repair or replace harness.

Caution
- **Recheck the diagnostic trouble code after repair completion.**

Note
- The ABS warning light normally illuminates for 2—4 seconds after ignition switch is turned to ON.
- If any symptoms have occurred in the past but are now okay, malfunction of related harness could be the possible cause and thus ABS CM is normal.

6	When IG switch is turned to ON, both TCS indicator light and TCS OFF light illuminate		
[TROUBLESHOOTING HINTS] • Malfunction of ABS/TCS CM or PCM • Malfunction of harness on TCS indicator light or TCS OFF light • Communication error, between TCS CM and PCM • Malfunction of engine control system			
STEP	INSPECTION		ACTION
1	Perform PCM on-board diagnostic inspection. Is DTC displayed?	Yes	Go to Engine On-board Diagnosis.
		No	Go to next step.
2	Perform ABS/TCS on-board diagnostic inspection. Is DTC displayed?	Yes	Repair problem found during DTC inspection.
		No	Go to next step.
3*	Inspect harness between ABS/TCS CM and instrument cluster (ABS/TCS warning light) for open/short circuit and connector pins for looseness. Is the harness okay?	Yes	Replace ABS/TCS CM.
		No	Repair or replace harness.

Caution
- **Recheck the diagnostic trouble code after repair completion.**

Note
- The ABS warning light normally illuminates for 2—4 seconds after ignition switch is turned to ON.
- If any symptoms have occurred in the past but are now okay, malfunction of related harness could be the possible cause and thus ABS CM is normal.

7	When IG switch is turned to ON, both ABS warning light and TCS OFF light illuminate		
[TROUBLESHOOTING HINTS] • Low battery voltage • Poor connection or disconnection of ABS/TCS CM connection • Poor GND of ABS/TCS CM • Malfunction of ABS/TCS CM			
STEP	INSPECTION		ACTION
1	Inspect ABS fuse (10 A). Is the fuse blown?	Yes	Replace fuse.
		No	Go to next step.
2	Drive the vehicle at **10 km/h {6.2 mph}** for **5 seconds**, then inspect the ABS/TCS warning lights. Do both lights go off after driving?	Yes	System is okay. (Erase memory)
		No	Go to next step.
3	Perform ABS/TCS on-board diagnostic inspection. Is DTC displayed?	Yes	Repair problem detected by DTC inspection.
		No	Go to next step.
4	Inspect connection on Z terminal of ABS/TCS CM. Is it securely connected?	Yes	Go to next step.
		No	Repair or replace harness.
5*	Disconnect ABS/TCS CM connector and inspect resistance from D terminal to body ground. Is resistance less than 5 Ω?	Yes	Replace ABS/TCS CM.
		No	Repair or replace harness.

Caution
- **Recheck the diagnostic trouble code after repair completion.**

Note
- The ABS warning light normally illuminates for 2—4 seconds after ignition switch is turned to ON.
- If any symptoms have occurred in the past but are now okay, malfunction of related harness could be the possible cause and thus ABS CM is normal.

8	**When IG switch is turned to ON, only the TCS–OFF light illuminates**		
[TROUBLESHOOTING HINTS] • Malfunction of TCS OFF switch • Short to GND in TCS OFF light harness • Malfunction of ABS/TCS CM • Malfunction of instrument cluster			
STEP	**INSPECTION**		**ACTION**
1	Does the light only illuminate when the water temperature is below **0 °C {32 °F}**? Warm up the engine to the normal operating temperature (max. 15 min.). Does the light go off after warming up?	Yes	System is okay.
		No	Go to next step.
2	Connect NGS tester and switch TCS LMP of active command mode to OFF. Will TCS indicator light go off?	Yes	Go to next step.
		No	Go to step 7.
3	Using NGS tester, start the engine and check MMI SIG. Is the value between **4—6%**?	Yes	Go to step 5.
		No	Go to next step.
4	Connect NGS tester and select TCS OFF PID. Does status of TCS OFF PID change when TCS OFF switch is operated?	Yes	Go to next step.
		No	Repair or replace harness or TCS OFF switch.
5	Perform PCM on-board diagnostic inspection. Is DTC displayed?	Yes	Repair problem detected by PCM on-board diagnostic inspection.
		No	Go to next step.
6	Disconnect ABS/TCS CM harness connector and turn IG switch to ON. Does the TCS OFF light illuminate?	Yes	Go to next step.
		No	Go to step 8.
7*	Is harness between ABS/TCS CM and TCS OFF light okay? (Check for short to GND.)	Yes	Go to next step.
		No	Repair or replace harness.
8	Connect ABS/TCS CM harness connector and turn IG switch to ON. Does TCS OFF light illuminate?	Yes	Replace ABS/TCS CM.
		No	Poor connection of harness and connector.

Caution
- **Recheck the diagnostic trouble code after repair completion.**

Note
- When the engine coolant temperature is below **0 °C {32 °F}**, the TCS OFF light stays on until the engine warms up to the normal operating temperature (**max. approx. 15 min.**). If the light goes off after warming up, the system is normal.
- The TCS OFF light illuminates at key on engine off. Start engine and inspect again.
- If any symptoms have occurred in the past but are now okay, malfunction of related harness could be the possible cause and thus ABS CM is normal.

9	TCS indicator light flashes when TCS is not activated during driving		
[TROUBLESHOOTING HINTS] • Improper tire size or pressure • Malfunction of ABS wheel-speed sensor, and/or sensor rotor • Short to GND in TCS indicator light harness intermittently			
STEP	INSPECTION		ACTION
1	Are tire size and pressure as specified?	Yes	Go to next step.
		No	Replace the tire with specified one, or adjust the pressure.
2*	Is the harness between the ABS/TCS CM and the TCS indicator light okay? • There should be no open or short circuit	Yes	Go to next step.
		No	Repair or replace wiring harness.
3	Inspect the ABS wheel-speed sensor/sensor rotor. ☞ 04–13 FRONT ABS WHEEL-SPEED SENSOR INSPECTION. Is the result okay?	Yes	Replace ABS/TCS CM.
		No	Replace ABS wheel-speed sensor/sensor rotor.

Caution
- **Recheck the diagnostic trouble code after repair completion.**

Note
- When tires of different sizes are used or tire air pressure is insufficient, the TCS may activate. While the TCS is operating, TCS OFF switch cannot be selected until the operation has been completed.
- When wheel spinning occurs, the TCS indicator light flashes. It indicates that the TCS system is operating normally. If flashing is observed too often, however, inspect the above items.
- If any symptoms have occurred in the past but are now okay, malfunction of related harness could be the possible cause and thus ABS CM is normal.

10	When IG switch is turned to ON, only TCS indicator light illuminates		
[TROUBLESHOOTING HINTS] • Malfunction of instrument cluster • Malfunction of ABS/TCS CM • Short to GND in TCS indicator light harness			
STEP	INSPECTION		ACTION
1*	Is the harness between the ABS/TCS CM and the TCS indicator light okay? • No shorted GND	Yes	Go to next step.
		No	Repair or replace wiring harness.
2	Are the valves in the combination meter okay?	Yes	Replace ABS/TCS CM.
		No	Replace the valves in the combination meter.

Caution
- **Recheck the diagnostic trouble code after repair completion.**

Note
- The ABS warning light normally illuminates for 2—4 seconds after ignition switch is turned to ON.
- If any symptoms have occurred in the past but are now okay, malfunction of related harness could be the possible cause and thus ABS CM is normal.

11	TCS indicator light and/or TCS OFF light has illuminated in the past (Now they don't)		
[TROUBLESHOOTING HINTS] • Poor harness of TCS indicator light, TCS OFF light, or TCS OFF switch • Communication error between TCS CM and PCM, or past malfunction of engine control system			
STEP	INSPECTION		ACTION
1	Perform PCM on-board diagnostic inspection. Is DTC displayed?	Yes	Repair as specified by the applicable DTC.
		No	Go to next step.
2	Perform ABS/TCS on-board diagnostic inspection. Are any diagnostic trouble codes displayed?	Yes	Repair as specified by the applicable DTC.
		No	Go to next step.
3	Inspect TCS OFF switch and the related harnesses in the following area: From ABS/TCS CM to TCS OFF light and from ABS/TCS CM to TCS indicator light (No shorted GND.)	Yes	System is normal. Recheck customer's complaint.
		No	Repair or replace harness.

Caution
- **Recheck the diagnostic trouble code after repair completion.**

Note
- When the engine coolant temperature is below **0 °C {32 °F}**, the TCS OFF light stays on until the engine warms up to the normal operating temperature (**max. approx. 15 min.**). If the light goes off after warming up, the system is normal.
- The TCS OFF light illuminates at key on engine off. Start engine and inspect again.
- If any symptoms have occurred in the past but are now okay, malfunction of related harness could be the possible cause and thus ABS CM is normal.

12	TCS is not working sufficiently		
[TROUBLESHOOTING HINTS] • Improper tire size and tire air pressure • Malfunction of PCM • Malfunction of ABS/TCS system			
STEP	INSPECTION		ACTION
1	Are tire size and pressure as specified?	Yes	Go to next step.
		No	Replace the tire with specified one, or adjust the pressure.
2	Perform on-board diagnostic inspection for the PCM. Are DTCs indicated?	Yes	Repair as specified by the applicable DTC for the PCM.
		No	Go to next step.
3	Connect the NGS tester to the connector, select ACTIVE COMMAND MODES and input **0 N·m** ENG TQR. Increase the engine speed between **2,000 and 3,000 rpm**. Does engine speed decrease?	Yes	System is normal. Recheck customer's complaint.
		No	Replace ABS/TCS CM.

Caution
- **Recheck the diagnostic trouble code after repair completion.**

Note
- When there is a possibility of engine stalling, TCS may allow spinning and restrain the torque reduction amount in order to prevent the engine from stalling.
- If any symptoms have occurred in the past but are now okay, poor harness could be the possible cause and thus ABS CM is normal.

13	When IG switch is turned to ON, all ABS warning light, TCS indicator light and TCS OFF light do not illuminate		
[TROUBLESHOOTING HINTS] • Burnt out bulb or short in related harness • Poor ABS CM ground • Malfunction of power supply circuit of ABS CM • Malfunction of ABS CM			
STEP	INSPECTION		ACTION
1	Inspect the instrument cluster. • Do other lights illuminate when the ignition switch is turned to ON?	Yes	Verify that diagnostic trouble code is in memory. Repair as necessary. If no DTC is displayed, go to next step.
		No	Inspect meter fuse. If fuse is melted, check to see if there is short to ground circuit between the ignition switch and fuse panel, and the ground between the fuse panel and the warning light.
2*	Inspect the terminals for any looseness or deformations between: • ABS/TCS CM and combination meter • Combination meter and fuse • Fuse and ignition switch for the following lights: • ABS warning light • TCS indicator light • TCS OFF light Is everything okay?	Yes	Go to next step.
		No	Repair or replace harness.
3	Inspect the bulbs for the following lights: • ABS warning light • TCS indicator light • TCS OFF light Is everything okay?	Yes	Go to next step.
		No	Replace the valves.
4	Inspect terminal Z and D of the ABS/TCS CM connector for connecting and fitting condition. Verify that there are no deformations or looseness. Are they okay?	Yes	Go to next step.
		No	Repair the deformed or loosened terminals.
5*	When the engine is idle, inspect the voltage at terminal Z of ABS/TCS CM. Is the voltage **10 V or more**?	Yes	Go to next step.
		No	Repair or replace harnesses.
6*	Inspect the continuity between the body ground and the ground terminal on the ABS/TCS CM. Is there continuity?	Yes	Replace the ABS/TCS CM.
		No	Repair or replace harnesses.

Caution
- **Recheck the diagnostic trouble code after repair completion.**

Note
- If any symptoms have occurred in the past but are now okay, poor harness could be the possible cause and thus ABS CM is normal.

04–10 GENERAL PROCEDURES

PRECAUTION (BRAKES) **04–10–1**
Wheels and Tires Removal/Installation **04–10–1**
Brake Lines Disconnection/Connection **04–10–1**
Connectors Disconnection **04–10–1**
ABS/TCS Components Operations ... **04–10–1**

PRECAUTION (BRAKES)

W6U410W01

Wheels and Tires Removal/Installation

- The removal and installation procedures for the wheels and tires are not mentioned in this section. When a wheel is removed, retighten it to **90—110 N·m {9—12 kgf·m, 66—86 ft·lbf}**.

Brake Lines Disconnection/Connection

Caution
- **Brake fluid will damage painted surfaces. If brake fluid does get on a painted surface, wipe it off immediately.**

- Tighten the brake pipe flare nut by using the **SST** (49 0259 770B). Be sure to modify the brake pipe flare nut tightening torque to allow for use of a torque wrench-**SST** combination. (Refer to 00–00 FUNDAMENTAL PROCEDURES, Torque Formulas.)
- If any brake line has been disconnected anytime during the procedure, add brake fluid, bleed the brakes, and inspect for leakage after the procedure has been completed.

Connectors Disconnection

- Disconnect the negative battery cable before doing any work that requires handling of connectors. Connect the negative battery cable only after the work is completed.

ABS/TCS Components Operations

- Make sure that there are no diagnostic trouble codes in the ABS/TCS memory after working on ABS/TCS components. If there are any codes in the memory, erase them.

04–11 CONVENTIONAL BRAKE SYSTEM

AIR BLEEDING 04–11–1
BRAKE FLUID 04–11–2
Brake Fluid Inspection 04–11–2
Brake Fluid Replacement 04–11–2
BRAKE PIPE INSPECTION 04–11–2
Brake Pipe Inspection 04–11–2
Flexible Hose Inspection 04–11–3
BRAKE PIPE REMOVAL/INSTALLATION 04–11–3
VACUUM LINE INSPECTION 04–11–3
BRAKE PEDAL INSPECTION 04–11–4
Brake Pedal Height Inspection 04–11–4
Brake Pedal Height Adjustment 04–11–4
Brake Pedal Play Inspection 04–11–4
Brake Pedal Play Adjustment 04–11–4
Pedal-to-floor Clearance Inspection .. 04–11–5
BRAKE PEDAL REMOVAL/INSTALLATION 04–11–5
BRAKE SWITCH INSPECTION 04–11–6
MASTER CYLINDER REMOVAL/INSTALLATION 04–11–6
Master Cylinder Installation Note 04–11–6
FLUID LEVEL SENSOR INSPECTION . 04–11–8
MASTER CYLINDER DISASSEMBLY/ASSEMBLY 04–11–8
Stop Screw and O-ring (without ABS) Assembly Note 04–11–9
Stop Pin and O-ring (with ABS) Assembly Note 04–11–9
POWER BRAKE UNIT INSPECTION ... 04–11–9
Power Brake Unit Function Check (Simple Method) 04–11–9
Power Brake Unit Function Check (Inspection Using the Testers) 04–11–9
POWER BRAKE UNIT REMOVAL/INSTALLATION 04–11–10
DUAL PROPORTIONING VALVE INSPECTION 04–11–11
DUAL PROPORTIONING VALVE REPLACEMENT 04–11–11
Dual Proportioning Valve Installation Note 04–11–11
FRONT BRAKE (DISC) INSPECTION .. 04–11–12
Disc Pad Thickness Inspection 04–11–12
Disc Plate Thickness Inspection 04–11–12
Disc Plate Runout Inspection 04–11–12
FRONT BRAKE (DISC) REMOVAL/INSTALLATION 04–11–13
Disc Plate Removal Note 04–11–13
Disc Plate Installation Note 04–11–13
Disc Pad Installation Note 04–11–13
FRONT DISC PAD REPLACEMENT ... 04–11–14
FRONT CALIPER DISASSEMBLY/ASSEMBLY 04–11–14
Piston Disassembly Note 04–11–14
Piston Seal Disassembly Note 04–11–15
REAR BRAKE (DISC) ON-VEHICLE INSPECTION 04–11–15
Disc Pad Thickness Inspection 04–11–15
Disc Plate Thickness Inspection 04–11–15
Disc Plate Runout Inspection 04–11–15
REAR BRAKE (DISC) REMOVAL/INSTALLATION 04–11–16
Disc Pad Installation Note 04–11–16
REAR DISC PAD REPLACEMENT 04–11–17
REAR CALIPER DISASSEMBLY/ASSEMBLY 04–11–18
Piston Disassembly Note 04–11–18
Piston Assembly Note 04–11–19
REAR BRAKE (DRUM) INSPECTION .. 04–11–19
Brake Lining Thickness Inspection ... 04–11–19
Brake Drum Inspection 04–11–19
REAR BRAKE (DRUM) REMOVAL/INSTALLATION 04–11–20
Brake Drum Removal Note 04–11–21
Brake Drum Installation Note 04–11–21
WHEEL CYLINDER DISASSEMBLY/ASSEMBLY 04–11–21

AIR BLEEDING

W6U411W01

Note

- The brakes should be bled whenever a brake line is disconnected. If a hydraulic line is disconnected at the master cylinder, start at the brake caliper or wheel cylinder farthest from the brake master cylinder, and move to the next farthest brake caliper or wheel cylinder until all four have been bled. If the disconnection point is anywhere except the master cylinder, start at the point closest to the disconnection, and move to the next closest brake caliper or wheel cylinder until all four have been bled.

1. On level ground, jack up the vehicle and support it evenly on safety stands.
2. Remove the bleeder cap and attach a vinyl tube to the bleeder screw.
3. Place the other end of the vinyl tube in a clear, brake fluidfilled container.
4. First person depresses the brake pedal several times, and then holds it in the depressed position.
5. The second person loosens the bleeder screw, drains out the fluid and closes the screw by using the **SST**.

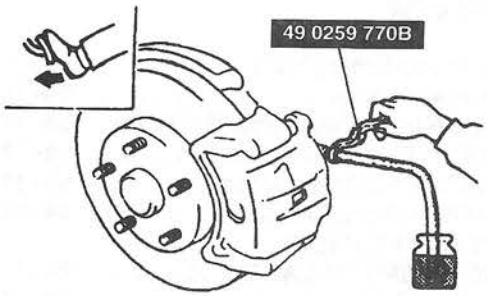

W6U411WA0

6. Repeat step 4 and 5 until no air bubbles are seen. The reservoir should be kept about 3/4 full during bleeding to prevent air from reentering the lines.

Tightening torque
5.9—8.8 N·m {60—90 kgf·cm, 53—78 in·lbf}

7. Inspect for correct brake operation.
8. Verify that there is no fluid leakage. Wipe off any spilled fluid immediately.
9. After bleeding the brakes, add brake fluid to the maximum level.

BRAKE FLUID

Brake Fluid Inspection

1. Depress the brake pedal several times, and inspect for leakage of the brake line system.
2. Verify that the fluid level in the reservoir is between the MAX and MIN lines on the reservoir.
3. If the fluid level is extremely low, inspect the brake system for leakage.

Fluid specification
SAE J1703 or FMVSS116 DOT-3



W6U411WBL

Brake Fluid Replacement

Caution

- **Brake fluid will damage painted surfaces. If brake fluid does get on a painted surface, wipe it off immediately.**

W6U411W24

1. Remove the brake fluid from the reservoir by using a suction pump.
2. Fill the reservoir with clean brake fluid.
3. Attach a vinyl tube to the farthest bleeder screw and place the other end of the tube in a clear container.
4. Remove all old brake fluid from the brake lines by loosening the bleeder screw and pumping the brake pedal until only clean fluid is seen. The reservoir should be kept about 3/4 full during bleeding to prevent air from reentering the lines.

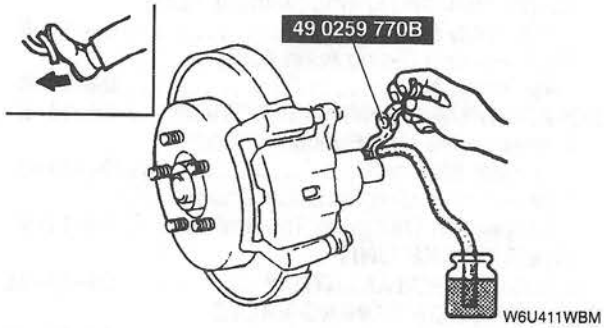

W6U411WBM

5. Perform the above for all bleeder screws.
6. Fill the reservoir to the specified levels.

BRAKE PIPE INSPECTION

Brake Pipe Inspection

- Inspect for cracks, damage, and corrosion of the brake pipe. Replace the pipe or flare nut(s) as necessary.

W6U411W25

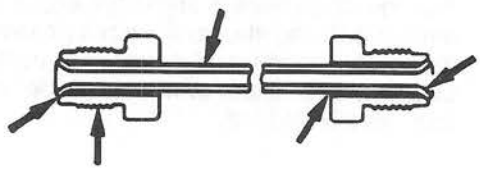

W6U411WBN

Flexible Hose Inspection

- Inspect for scars, cracks, and swelling of the flexible hose. Replace the hose as necessary.

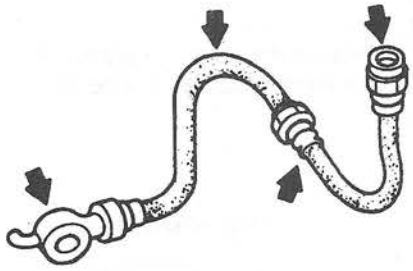

W6U411WBP

BRAKE PIPE REMOVAL/INSTALLATION

W6U411W26

1. Remove the brake pipe by using the **SST**.
2. Disconnect the clip and remove the flexible hose from the bracket.

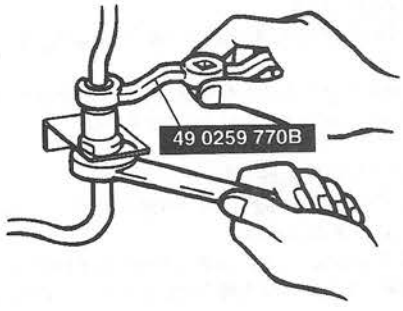

W6U411WBQ

3. Secure the flexible hose in the bracket and connect the clip to it.

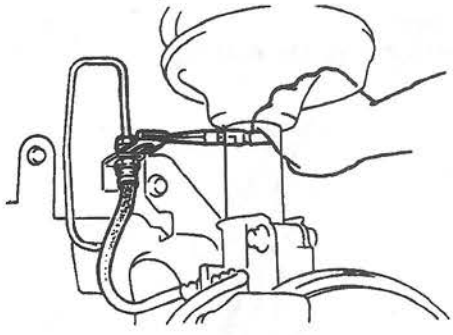

W6U411WBR

4. Connect the flexible hose to the brake pipe. Verify that the hose is not twisted.
5. Tighten the flare nut by using the **SST**. Verify that the hose can not come in contact with any other parts of vehicle.

Tightening torque
12.9—21.5 N·m
{130—220 kgf·cm, 113—190 in·lbf}

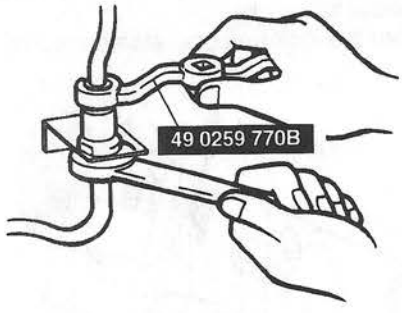

W6U411WBS

VACUUM LINE INSPECTION

W6U411W02

1. Remove the clamps and vacuum hose.
2. Apply both suction and pressure to the engine-side hose, and verify that air blows only toward that side. If air flows in both directions or not at all, replace the vacuum hose.

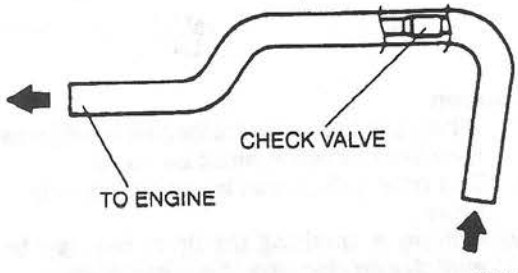

W6U411WA1

BRAKE PEDAL INSPECTION

W6U411W03

Brake Pedal Height Inspection

- Verify the distance from the center of the upper surface of the pedal pad to the carpet is as specified.

Pedal height (reference value)
193 mm {7.60 in}

Brake Pedal Height Adjustment

1. Loosen locknut B and turn adjusting bolt A until it does not contact the pedal.
2. Loosen locknut D and turn rod C to adjust the height.
3. Tighten locknut D.

Tightening torque
24—34 N·m {2.4—3.5 kgf·m, 18—25 ft·lbf}

4. Turn adjusting bolt A so that clearance E between adjusting bolt A and the pedal is **0.1—1.0 mm {0.004—0.039 in}**.
5. Tighten locknut B.

Tightening torque
14—17 N·m {140—180 kgf·cm, 122—156 in·lbf}

6. Verify that clearance F is obtained at any position of the pedal full stroke.
7. Verify that the lock unit operates correctly.

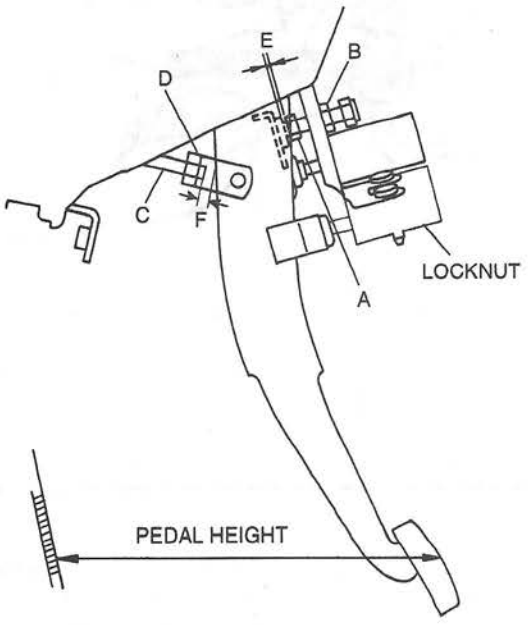

W6U411WA2

Caution

- **When the brake pedal height is adjusted, a new brake switch must be used.**
- **The new switch can be adjusted only once.**
- **Pulling or pushing the tip of the new brake switch can damage the inner parts.**

8. Install a new brake switch.

Note

- The new brake switch projection height is adjusted automatically in step 7.

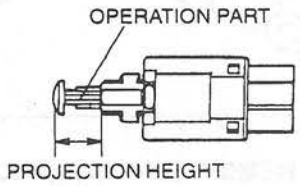

W6U411WC0

9. Pull the brake pedal until you hear the tip of the brake switch click.
10. Inspect the pedal play and the brake light operation.
11. If the brake light does not operate, replace the brake switch and repeat steps 6—8.

Brake Pedal Play Inspection

1. Depress the pedal several times to eliminate the vacuum in the system.
2. Remove the snap pin, verify that the holes in the fork and in the pedal are aligned, and reinstall the pin.
3. Gently depress the pedal by hand until resistance is felt, and inspect for the play.

Pedal play
7.8—12 mm {0.31—0.47 in}



W6U411WA3

Brake Pedal Play Adjustment

1. Remove the snap pin and clevis pin.
2. Loosen locknut D and turn rod C to align the holes in the fork and in the pedal.
3. Install the clevis pin and the snap pin.
4. Tighten locknut D.

Tightening torque
24—34 N·m {2.4—3.5 kgf·m, 18—25 ft·lbf}

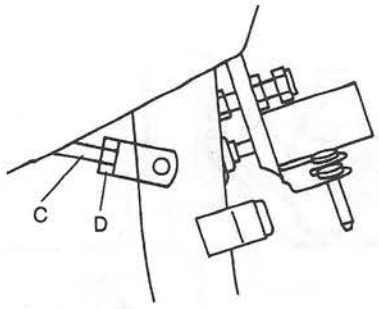

W6U411WA4

5. Perform step 6 through step 11 from the "Brake Pedal Height Adjustment".

Pedal-to-floor Clearance Inspection

1. Start the engine and verify that the distance from the floor panel to the pedal pad center is as specified when the pedal is depressed with a force of **589 N {60 kgf, 132 lbf}**.

Specification
60 mm {2.4 in} min.

2. If the distance is less than specified, inspect for the air in brake system.

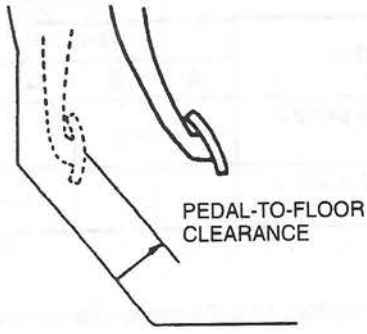

W6U411WA5

BRAKE PEDAL REMOVAL/INSTALLATION

W6U411W04

1. Remove the lock unit (ATX).
2. Remove in the order indicated in the table.
3. Install in the reverse order of removal.

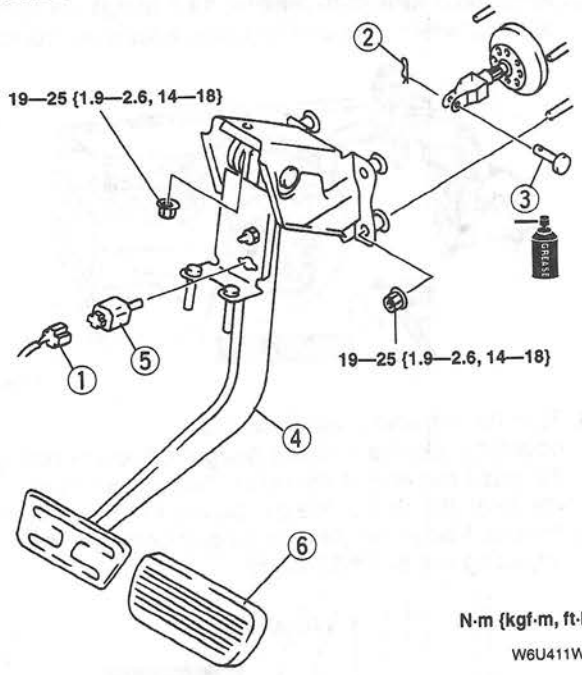

N·m {kgf·m, ft·lbf}

W6U411WA6

1	Brake switch connector
2	Spring pin
3	Clevis pin
4	Brake pedal
5	Brake switch
6	Pedal pad

BRAKE SWITCH INSPECTION

1. Disconnect the brake switch connector.
2. Inspect for continuity between the terminals of the brake switch connector by using the circuit tester.

○—○ : Continuity

Condition	Terminal			
	A	B	C	D
When the brake pedal is depressed	○	○		
When the brake pedal is not depressed			○	○

W6U411WA7

3. If not as specified, replace the brake switch.

W6U411W05

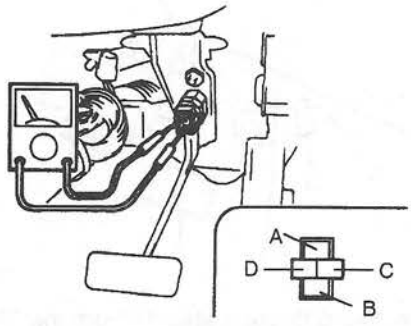

W6U411WBT

Note
- Terminals C and D are used for the cruise control system.

MASTER CYLINDER REMOVAL/INSTALLATION

1. Remove in the order indicated in the table.
2. Install in the reverse order of removal.

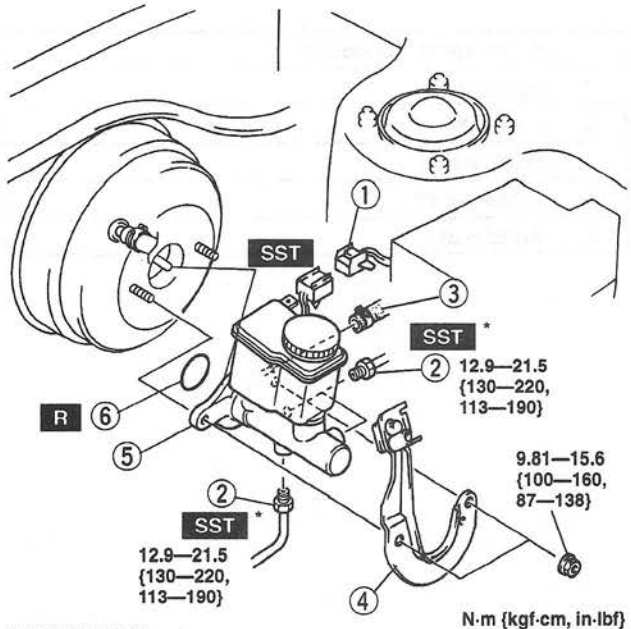

* 49 0259 770B

W6U411WA8

1	Brake fluid level sensor connector
2	Brake pipe
3	Hose (MTX)
4	Bracket
5	Master cylinder ☞ Installation Note
6	O-ring

Master Cylinder Installation Note
1. Loosen the adjusting nut of the **SST**.
2. Place the **SST** on the power brake unit and tighten the nut and washer.

W6U411W06

Tightening torque
9.9—15.6 N·m
{100—160 kgf·cm, 87—138 in·lbf}

3. Apply **66.7 kPa {500 mmHg, 19.7 inHg}** vacuum to the power brake unit by using a vacuum pump.

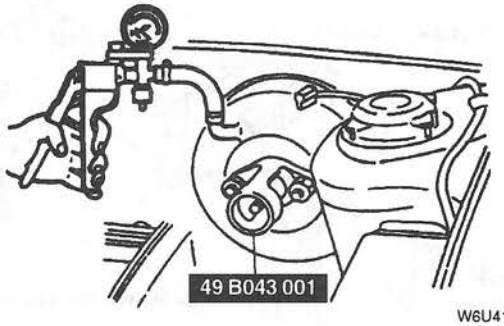

W6U411WAC

4. Turn the adjusting nut of the **SST** counterclockwise until the gauge rod just contacts the push rod end of the power brake unit. Push lightly on the end of the gauge rod to be sure it is seated. Verify that there is no gap between the adjusting nut and **SST** body.

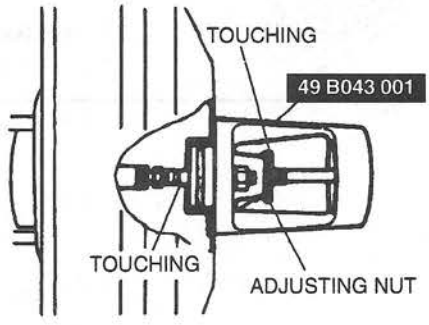

W6U411WAD

5. Remove the **SST** from the power brake unit without disturbing the adjusting nut. Set the **SST** onto the master cylinder as shown in the figure.

6. Push lightly on the end of the **SST** gauge rod to be sure that it is contacting the bottom of the master cylinder piston, but do not push so hard that the piston moves. Note any clearance between the **SST** body and the adjusting nut: clearance B, or between the body and the master cylinder: clearance C. Adjust the push rod as necessary as outlined in "Adjustment" below.

Measurement	Push rod
Clearance at B	Too long
Clearance at C	Too short
No clearance at B or C	Okay

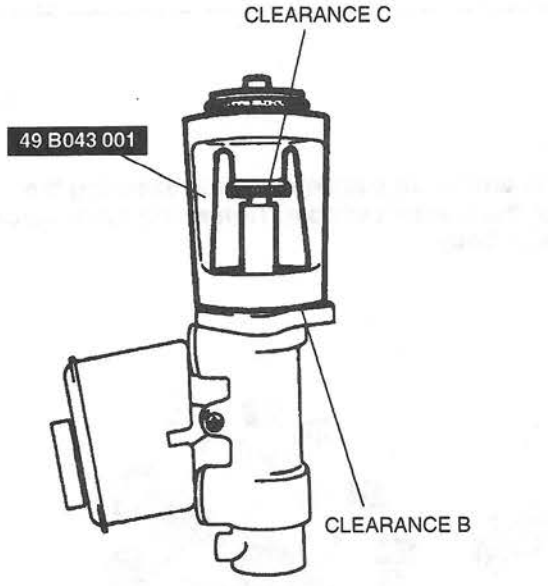

W6U411WAE

Adjustment
Clearance at B

1. Measure and record the height D1 of the gauge rod.

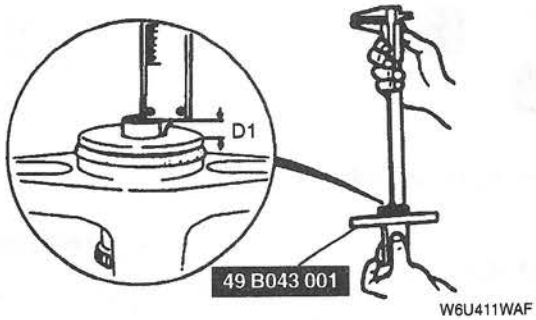

W6U411WAF

2. Turn the adjusting nut until the **SST** body sets closely on the master cylinder. Turn only enough for the body to touch.
3. Measure and record height D2 of the gauge rod.

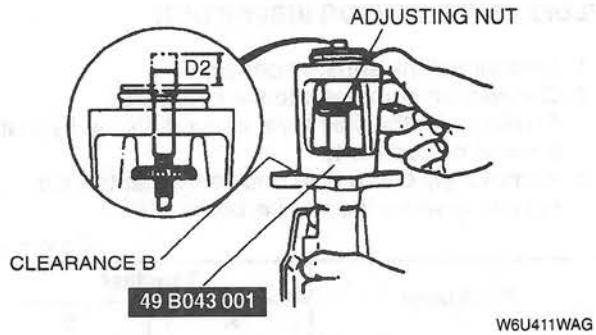

W6U411WAG

4. Subtract D1 from D2. By using the **SST**, turn the nut to shorten the power brake unit push rod an amount equal to the difference.

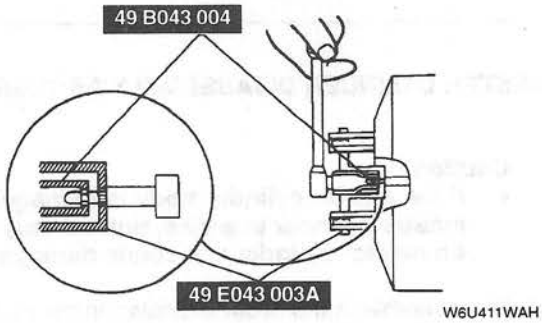

W6U411WAH

Clearance at C

1. Push lightly on the end of the **SST** gauge rod, and measure the clearance between the adjusting nut and the **SST** body.

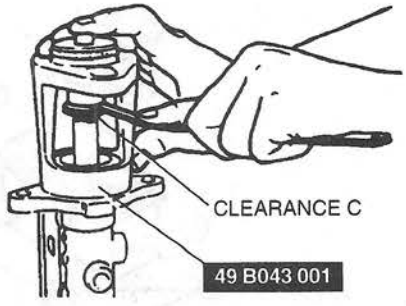

W6U411WAJ

2. Using the **SSTs**, turn the nut to lengthen the power brake unit push rod an amount equal to the clearance measured at B.

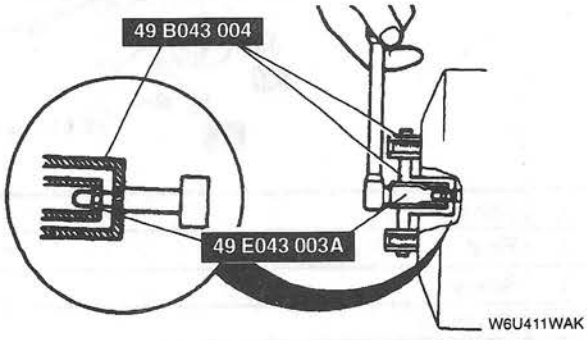

W6U411WAK

FLUID LEVEL SENSOR INSPECTION

W6U411W07

1. Disconnect the sensor connector.
2. Connect an ohmmeter to the connector.
3. Starting with the fluid level above MIN, verify that there is no continuity.
4. Remove the brake fluid and verify that there is continuity when the level is below MIN.

O—O : Continuity

Fluid level	Terminal	
	A	B
Below MIN	O	O
Above MIN		

W6U411WAL

5. If not as specified, replace the sensor.

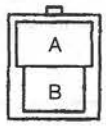

W6U411WAM

MASTER CYLINDER DISASSEMBLY/ASSEMBLY

W6U411W08

Caution

- **If the master cylinder body is damaged, replace the unit as an assembly. When securing the master cylinder in a vise, tighten only the flange of the master cylinder. Tightening other places on master cylinder will cause damage to the cylinder body.**

1. Disassemble in the order indicated in the table.
2. Assemble in the reverse order of disassembly.

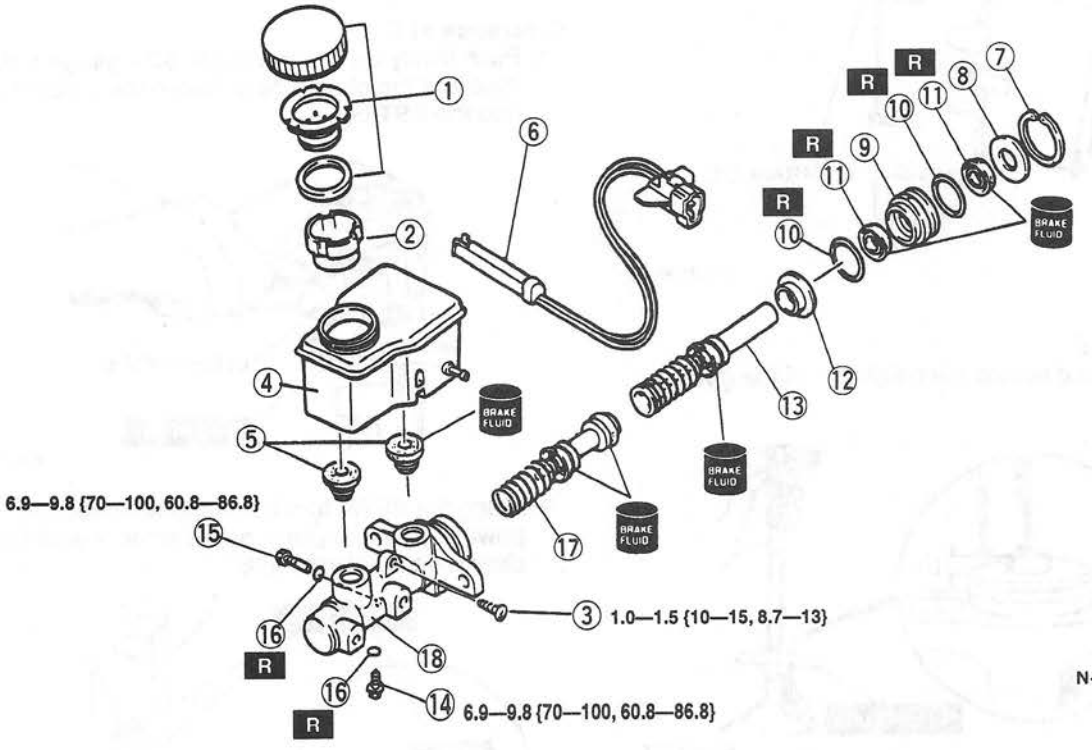

N·m {kgf·cm, in·lbf}

W6U411WAN

1	Cap set
2	Float
3	Screw
4	Reservoir
5	Joint bushing
6	Fluid level sensor
7	Snap ring

8	Spacer
9	Piston guide
10	O-ring
11	Cup
12	Primary piston stopper
13	Primary piston
14	Stop screw (without ABS) ☞ Assembly Note

15	Stop pin (with ABS) ☞ Assembly Note
16	O-ring ☞ Assembly Note
17	Secondary piston
18	Master cylinder body

Stop Screw and O-ring (without ABS) Assembly Note

1. Install the new O-ring onto the stop screw.
2. Push the primary piston assembly in full.
3. Install and tighten the stop screw.

Tightening torque
6.9—9.8 N·m
{70—100 kgf·cm, 60.8—86.8 in·lbf}

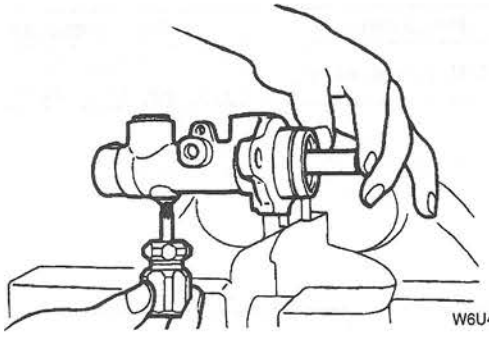

W6U411WAP

Stop Pin and O-ring (with ABS) Assembly Note

1. Install the secondary piston with the piston hole facing the stop pin.
2. Install the new O-ring onto the stop pin.
3. Install the stop pin.

Tightening torque
6.9—9.8 N·m
{70—100 kgf·cm, 60.8—86.8 in·lbf}

4. Push and release the secondary piston assembly to verify that it is held by the stop pin.

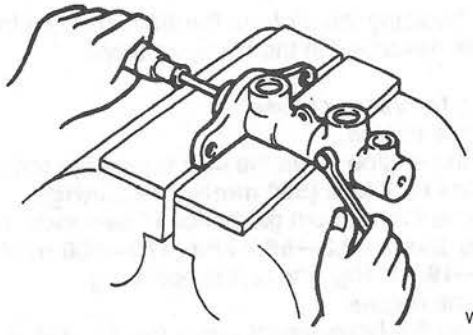

W6U411WAQ

POWER BRAKE UNIT INSPECTION

W6U411W23

Power Brake Unit Function Check (Simple Method)

Note
- Replace power brake unit assembly as necessary.

Step 1
1. With the engine stopped, depress the pedal several times.
2. With the pedal depressed, start the engine.
3. If the pedal moves down slightly, immediately after the engine starts, the unit is operating.

Step 2
1. Start the engine.
2. Stop the engine after idling for **1 or 2 minutes**.
3. Depress the pedal with the usual force.
4. If the first pedal stroke is long and becomes shorter with subsequent strokes, the unit is operating.

Note
- If a problem is found, inspect for damages on the check valve or vacuum hose, and examine the installation. Repair as necessary, and inspect it again.

Step 3
1. Start the engine.
2. Depress the pedal with the usual force.
3. Stop the engine with the pedal held depressed.
4. Hold the pedal down for **about 30 seconds**.
5. If the pedal height does not change, the unit is operating.

Power Brake Unit Function Check (Inspection Using the Testers)

1. Connect the **SSTs**, vacuum gauge, and pedal depression force gauge as shown in the figure.

Note
- Use commercially available gauges and pedal depression force gauge.
- Bleed the air from the **SST** at gauge A.

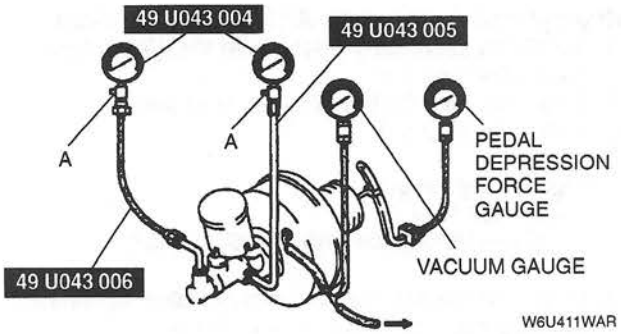

2. After bleeding the air from the **SST**, conduct the test as described in the following steps.

Checking for vacuum loss

1. Start the engine.
2. Stop the engine when the vacuum gauge reading reaches **66.7 kPa {500 mmHg, 19.7 inHg}**.
3. Observe the vacuum gauge for **15 seconds**. If the gauge shows **63.3—66.7 kPa {475—500 mmHg, 18.7—19.7 inHg}**, the unit is operating.
4. Start the engine.
5. Depress the brake pedal with a force of **196 N {20 kgf, 44 lbf}**.
6. With the brake pedal depressed, stop the engine when the vacuum gauge reading reaches **66.7 kPa {500 mmHg, 19.7 inHg}**.
7. Observe the vacuum gauge for **15 seconds**. If the gauge shows **66.3—66.7 kPa {475—500 mmHg, 18.7—19.7 inHg}**, the unit is operating.

Checking for hydraulic pressure

1. When the engine is stopped (vacuum **0 kPa {0 mmHg, 0 inHg}**) and the fluid pressure is within the specification, the unit is operating.

Pedal force	Fluid pressure
196 N {20 kgf, 44 lbf}	880 kPa {9 kgf/cm^2, 130 psi} min

2. Start the engine. Depress the brake pedal when the vacuum reaches **66.7 kPa {500 mmHg, 19.7 inHg}**. If the fluid pressure is within the specification, the unit is operating.

Pedal force	Fluid pressure
196 N {20 kgf, 44 lbf}	8,830 kPa {90 kgf/cm^2, 1,280 psi} min

POWER BRAKE UNIT REMOVAL/INSTALLATION

1. Remove the master cylinder. (Refer to MASTER CYLINDER REMOVAL/INSTALLATION.)
2. Remove in the order indicated in the table.
3. Install in the reverse order of removal.

W6U411W09

1	Vacuum hose
2	Snap pin
3	Clevis pin
4	Nut
5	Power brake unit
6	Gasket
7	Fork
8	Nut

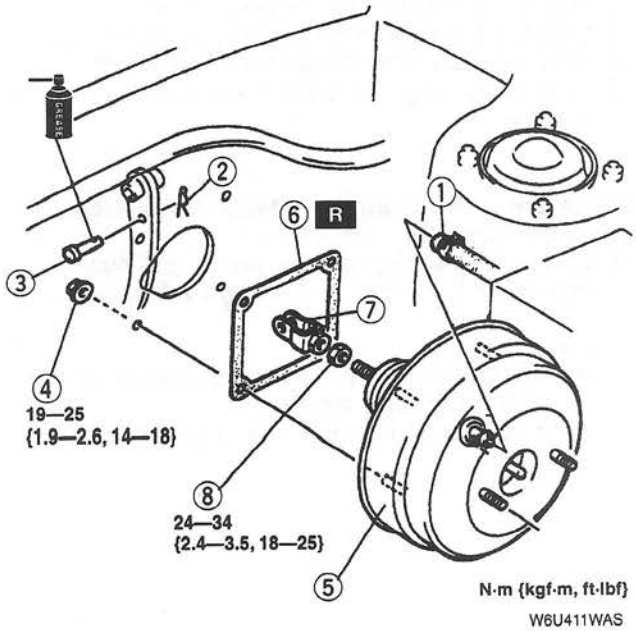

DUAL PROPORTIONING VALVE INSPECTION

W6U411W10

1. Connect the **SSTs** to the brake pipes as shown in the figure.
2. Bleed the air from the brake system.
3. Measure the fluid pressure of the master cylinder and the rear brake.

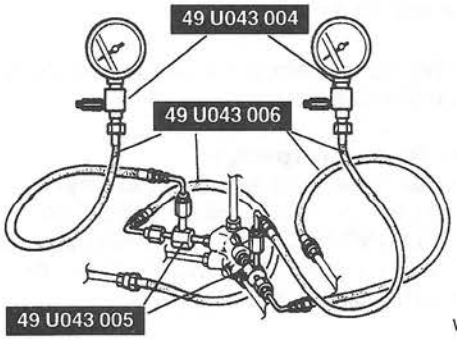

W6U411WAT

	A	A'	B	B'
Without ABS	2940 {30, 430}	2940 {30, 430} ± 200 {2, 30}	5880 {60, 850}	3830 {39, 550} ± 295 {3, 43}
With ABS	3400 {35, 500}	3400 {35, 500} ± 295 {3, 43}	5880 {60, 850}	4170 {42.5, 604} ± 390 {4, 60}

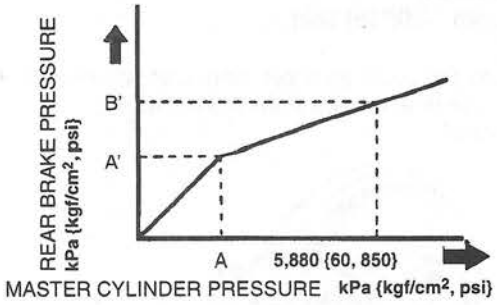

W6U411WAU

Fluid pressure

kPa {kgf/cm², psi}

4. If not within the specification, replace the dual proportioning valve.

DUAL PROPORTIONING VALVE REPLACEMENT

W6U411W11

1. Remove in the order indicated in the table.
2. Install in the reverse order of removal.

1	Brake pipe
2	Bolt
3	Dual proportioning valve ☞ Installation Note

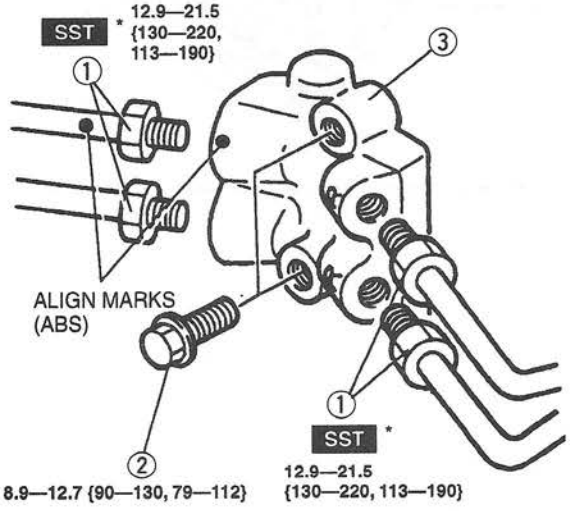

* 49 0259 770B

N·m {kgf·cm, in·lbf}

W6U411WAV

Dual Proportioning Valve Installation Note

- Install the dual proportioning valve so that the R mark faces right side of the vehicle.

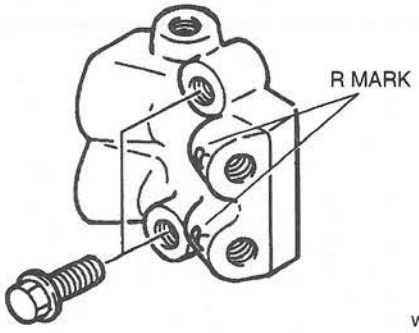

W6U411WAW

FRONT BRAKE (DISC) INSPECTION

W6U411W12

Disc Pad Thickness Inspection

1. Jack up the front of the vehicle and support it with safety stands.
2. Remove the wheels.
3. Verify the remaining thickness of the pads.

Thickness
2.0 mm {0.08 in} min.

4. Replace the pads as a set: right and left wheels, if either one is at or less than the minimum thickness.

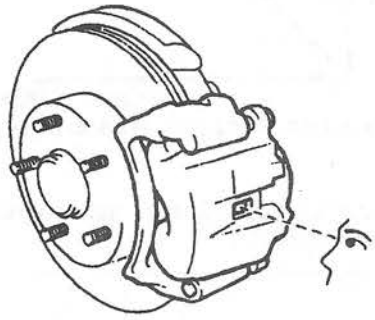

W6U411WAX

Disc Plate Thickness Inspection

1. Measure the thickness of the disc plate.

Caution
- **When it is necessary to machine the disc plate, and the disc plate is removed from the vehicle then machined, excessive runout may result. Machine the disc plate which is installed on the vehicle.**

Minimum
22 mm {0.87 in}
Minimum thickness after machining by using a brake lathe on-vehicle
22.8 mm {0.90 in}

2. If the thickness is not within the specification, replace the disc plate.

Disc Plate Runout Inspection

1. Verify that there is no looseness in wheel bearing. (Refer to 03–11 WHEEL HUB, STEERING KNUCKLE INSPECTION, Wheel Bearing Play.)
2. Measure the runout at the outer edge of the contact surface of the disc pad.

Runout
0.05 mm {0.002 in} max.

3. If the runout is not within the specification, repair or replace the disc plate.

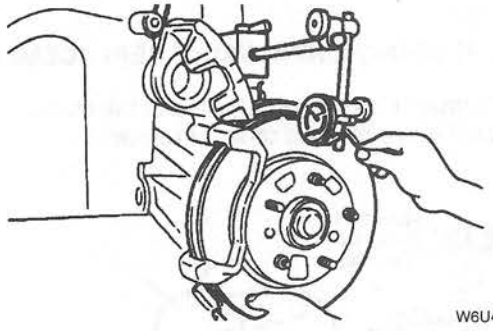

W6U411WAY

FRONT BRAKE (DISC) REMOVAL/INSTALLATION

W6U411W13

1. Remove in the order indicated in the table.
2. Install in the reverse order of removal.
3. After installation, depress the pedal several times, rotate the wheel by hand, and verify that the brake does not drag.

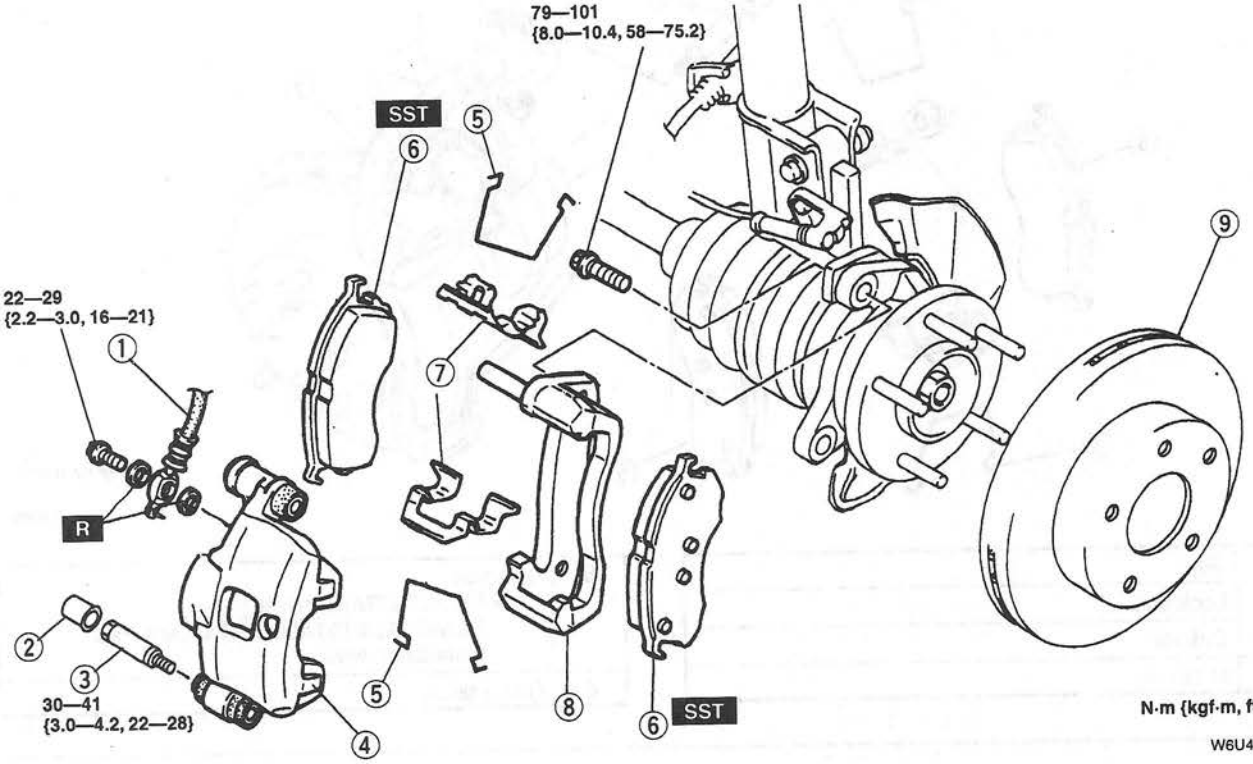

1	Flexible hose
2	Cap
3	Lock bolt
4	Caliper
5	M-spring
6	Disc pad ☞ Installation Note

7	Guide plate
8	Mounting support
9	Disc plate ☞ Removal Note ☞ Installation Note

Disc Plate Removal Note

- Mark the wheel hub bolt and disc plate for guide at installation before removal.

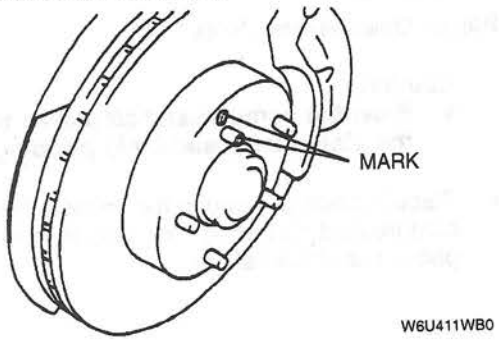

Disc Plate Installation Note

1. Remove any rust or grime on the contact face of the disc plate and wheel hub.
2. Install the disc plate and align the marks put before removal.

Disc Pad Installation Note

1. Push the piston fully inward by using the **SST**.
2. Install the disc pad.

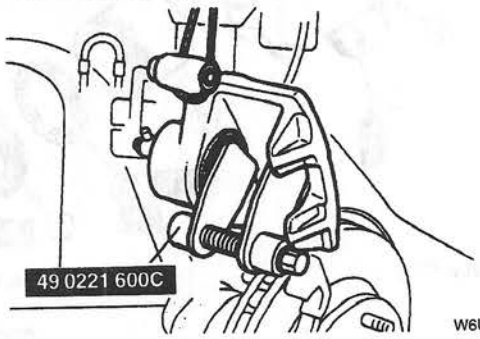

FRONT DISC PAD REPLACEMENT

W6U411W14

1. Remove in the order indicated in the table.
2. Install in the reverse order of removal.

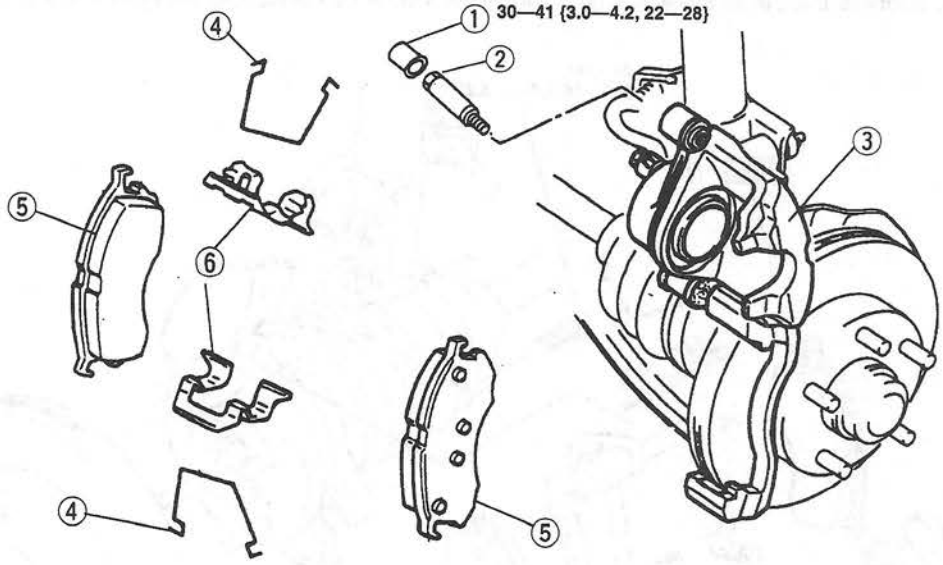

N·m {kgf·m, ft·lbf}

W6U411WB2

1	Cap
2	Lock bolt
3	Caliper
4	M-spring
5	Disc pad ☞ FRONT BRAKE (DISC) REMOVAL/INSTALLATION, Disc Pad Installation Note
6	Guide plate

FRONT CALIPER DISASSEMBLY/ASSEMBLY

W6U411W15

1. Disassemble in the order indicated in the table.
2. Assemble in the reverse order of removal.

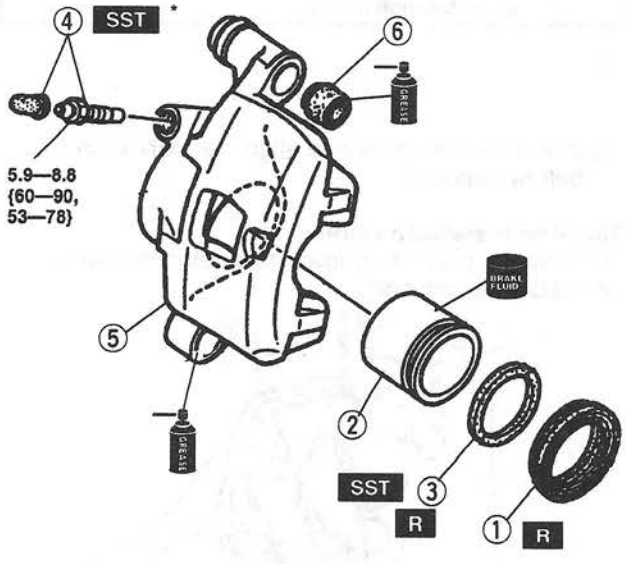

* 49 0259 770B

N·m {kgf·cm, in·lbf}

W6U411WB3

1	Dust seal
2	Piston ☞ Disassembly Note
3	Piston seal ☞ Disassembly Note
4	Bleeder cap, bleeder screw
5	Caliper body
6	Boot

Piston Disassembly Note

Caution

- **Blow the compressed air slowly to prevent the piston from suddenly popping out.**

- Place a piece of wood in the caliper, then blow compressed air through the hole to force the piston out of the caliper.

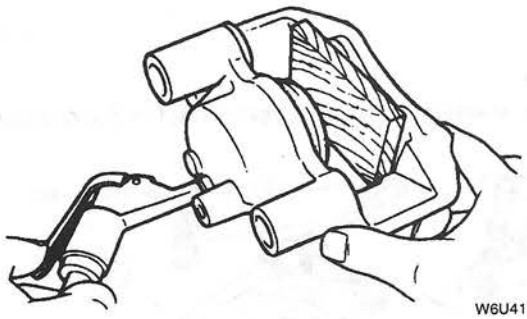

W6U411WB4

Piston Seal Disassembly Note

- Remove the piston seal from the brake caliper by using the **SST**.

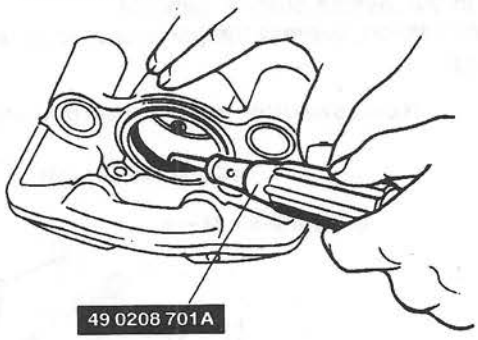

W6U411WB5

REAR BRAKE (DISC) ON-VEHICLE INSPECTION

W6U411W16

Disc Pad Thickness Inspection

1. Jack up the rear of the vehicle and support it on safety stands.
2. Remove the wheel and tires.
3. Look through the caliper inspection hole and inspect the remaining thickness of the pads.

Thickness
1.0 mm {0.04 in}

4. Replace the pads as a set: right and left wheels, if either is less than the minimum thickness.

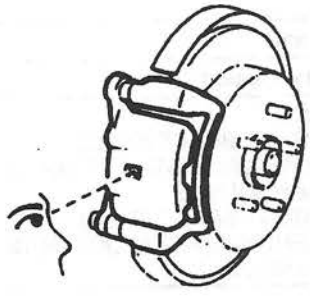

W6U411WB7

Disc Plate Thickness Inspection

1. Measure the thickness of the disc plate.

Caution

- **When it is necessary to machine the disc plate, and the disc plate is removed from the vehicle then machined, excessive runout may result. Machine the disc plate which is installed on the vehicle.**

Minimum
8 mm {0.31 in}
Minimum thickness after machining by using a brake lathe on-vehicle
8.8 mm {0.35 in}

2. If the thickness is not within the specifications, replace the disc plate.

Disc Plate Runout Inspection

(Refer to FRONT BRAKE (DISC) INSPECTION, Disc Plate Runout Inspection)

REAR BRAKE (DISC) REMOVAL/INSTALLATION

W6U411W17

1. Remove in the order indicated in the table.
2. Install in the reverse order of removal.
3. After installation, depress the pedal several times, rotate the wheel by hand, and verify that the brake does not drag.

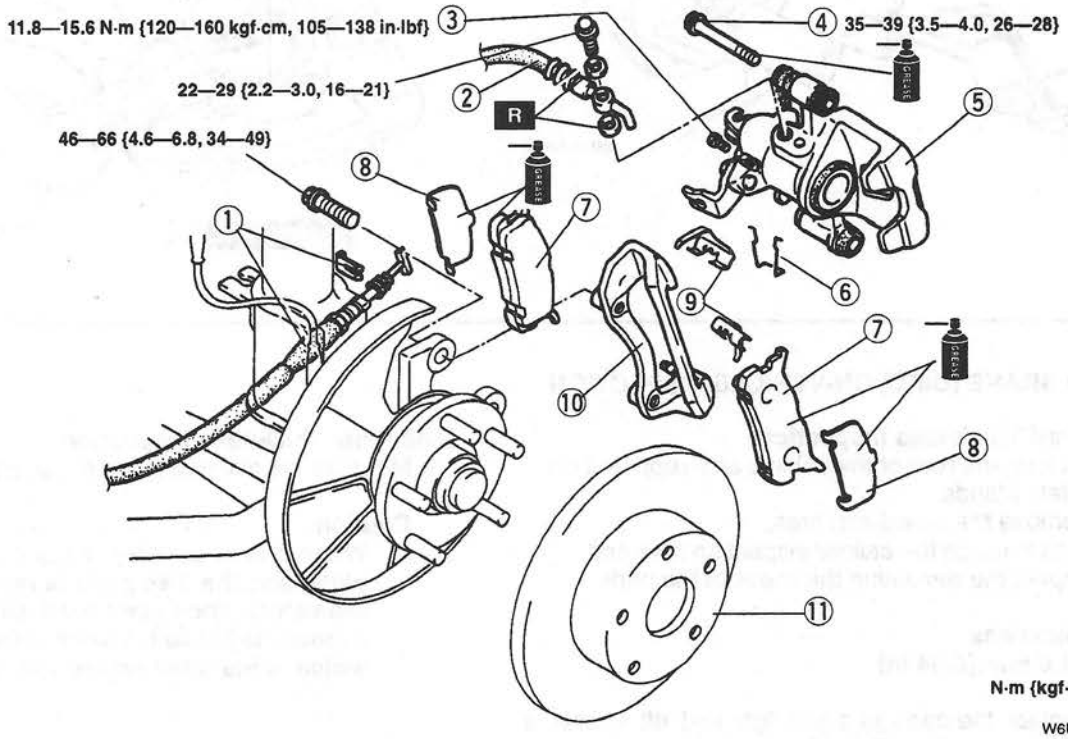

N·m {kgf·m, ft·lbf}

W6U411WB8

1	Parking brake cable, clip
2	Flexible hose
3	Screw plug
4	Lock bolt
5	Caliper
6	Spring
7	Disc pad ☞ Installation Note

8	Shim
9	Guide plate
10	Mounting support
11	Disc plate ☞ FRONT BRAKE (DISC) REMOVAL/INSTALLATION, Disc Plate Removal Note ☞ FRONT BRAKE (DISC) REMOVAL/INSTALLATION, Disc Plate Installation Note

Disc Pad Installation Note

1. Turn the manual adjustment gear counterclockwise with an Allen wrench to pull the brake caliper piston inward. (Turn until it stops.)
2. Install the disc pads.
3. Turn the manual adjustment gear clockwise until the brake pads just touch the disc plate. Turn the manual adjustment gear back 1/3-turn.

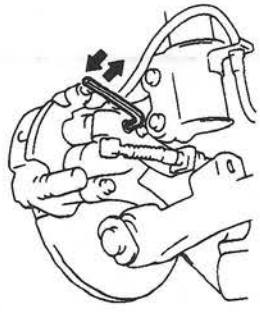

W6U411WB9

REAR DISC PAD REPLACEMENT

W6U411W18

1. Remove in the order indicated in the table.
2. Install in the reverse order of removal.

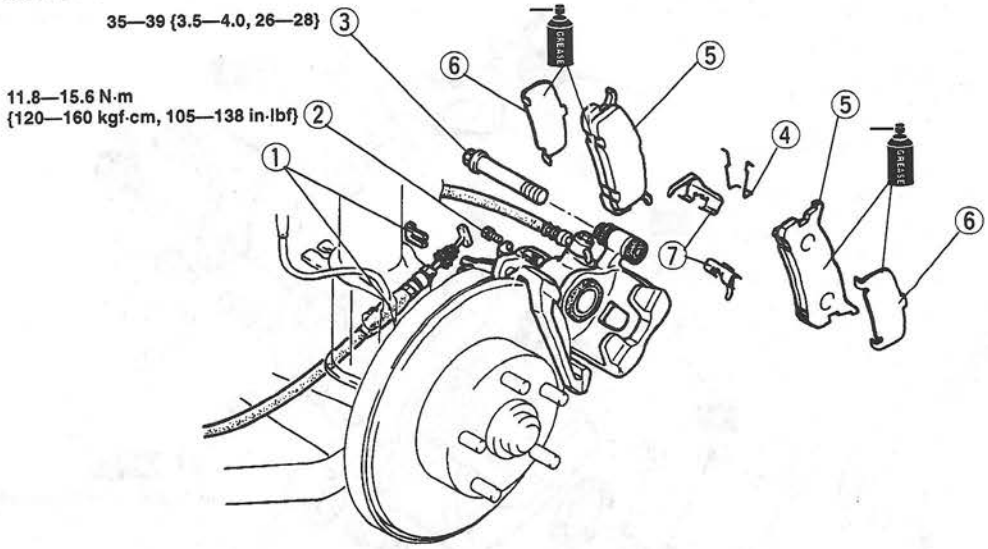

N·m {kgf·m, ft·lbf}

W6U411WBA

1	Parking brake cable, clip
2	Screw plug
3	Lock bolt
4	Spring

5	Disc pad ☞ REAR BRAKE (DISC) REMOVAL/INSTALLATION, Disc Pad Installation Note
6	Shim
7	Guide plate

REAR CALIPER DISASSEMBLY/ASSEMBLY

W6U411W19

1. Disassemble in the order indicated in the table.
2. Assemble in the reverse order of disassembly.

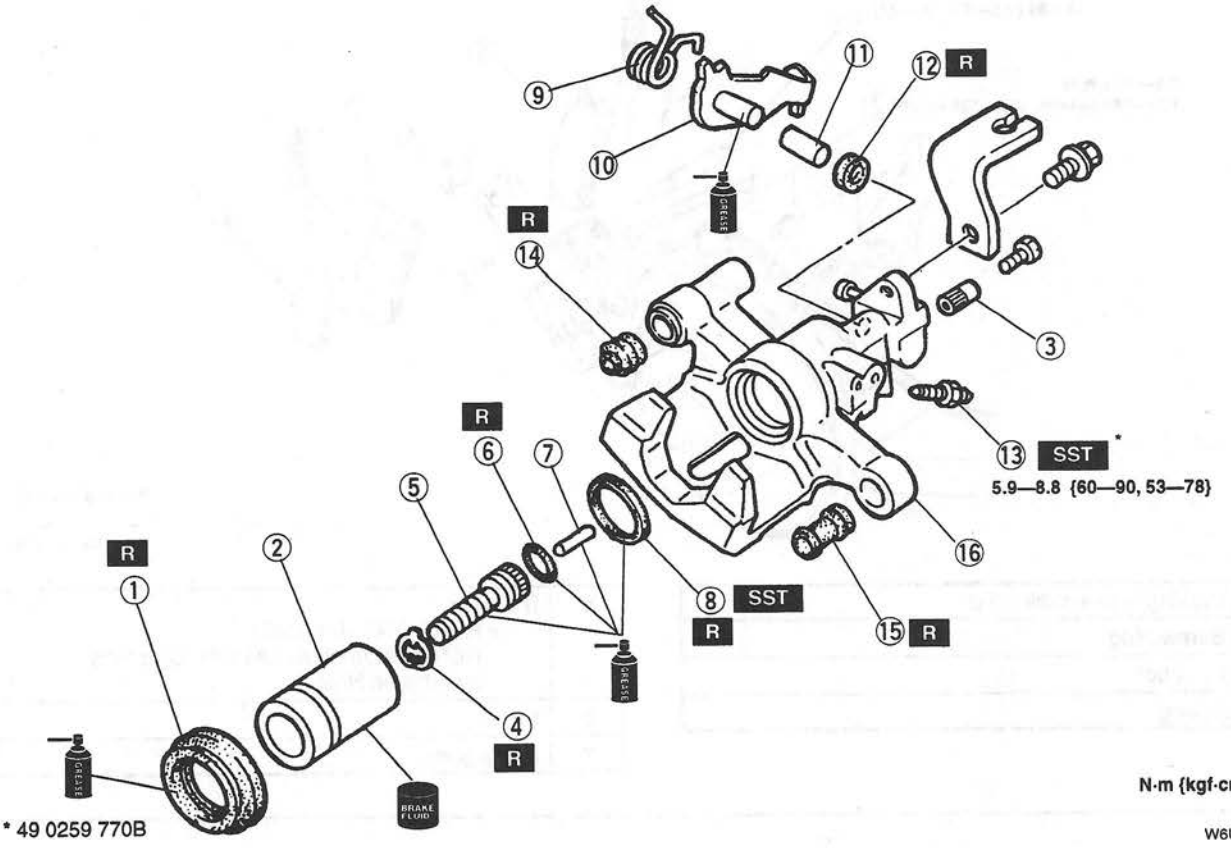

W6U411WBB

1	Dust seal
2	Piston ☞ Disassembly Note ☞ Assembly Note
3	Manual adjustment gear
4	Snap ring
5	Adjusting bolt
6	O-ring
7	Connecting link
8	Piston seal ☞ CALIPER (FRONT) DISASSEMBLY/ASSEMBLY, Piston Seal Disassembly Note

9	Spring
10	Operating lever
11	Sleeve
12	Boot
13	Bleeder cap and bleeder screw
14	Boot
15	Boot
16	Caliper body

Piston Disassembly Note

- Turn the adjustment gear clockwise with an Allen wrench to remove the piston from the adjustment gear. (Turn the adjustment gear until it becomes easy to turn.)

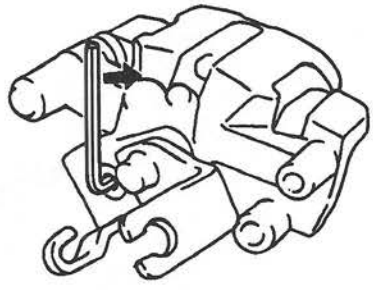

W6U411WBC

Piston Assembly Note

- Insert the piston into the caliper and turn the adjustment gear counterclockwise with an Allen wrench to pull the piston inward. (Turn until it stops.)

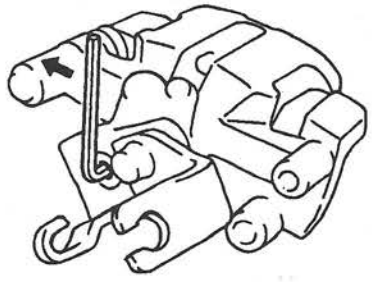

W6U411WBD

REAR BRAKE (DRUM) INSPECTION

Brake Lining Thickness Inspection

1. Remove the brake drum.
2. Inspect the remaining thickness of the lining.

   Thickness
   1.0 mm {0.04 in} min.

3. Replace both left and right brake shoes if either is at or less than the minimum thickness.

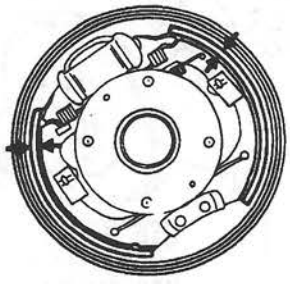

W6U411WBE

Brake Drum Inspection

1. Measure the inner diameter of the drum.

   Maximum diameter
   230.1 mm {9.059 in}

W6U411W20

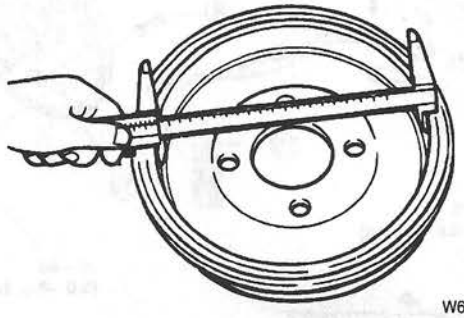

W6U411WBF

2. Inspect for scratches, uneven or abnormal wear inside the drum.
3. Repair or replace the drum as necessary.
4. When repairing or replacing the drum, inspect for the contact with the shoes.

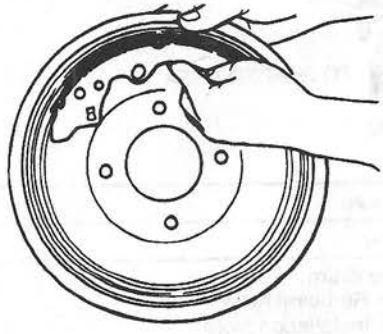

W6U411WBG

REAR BRAKE (DRUM) REMOVAL/INSTALLATION

W6U411W21

1. Remove in the order indicated in the table.
2. Install in the reverse order of removal.
3. After installation,
   (1) Depress the brake pedal several times. Then verify that the brakes do not drag.
   (2) Inspect for the pedal-to-floor clearance.
   (3) Inspect for the parking brake lever stroke.

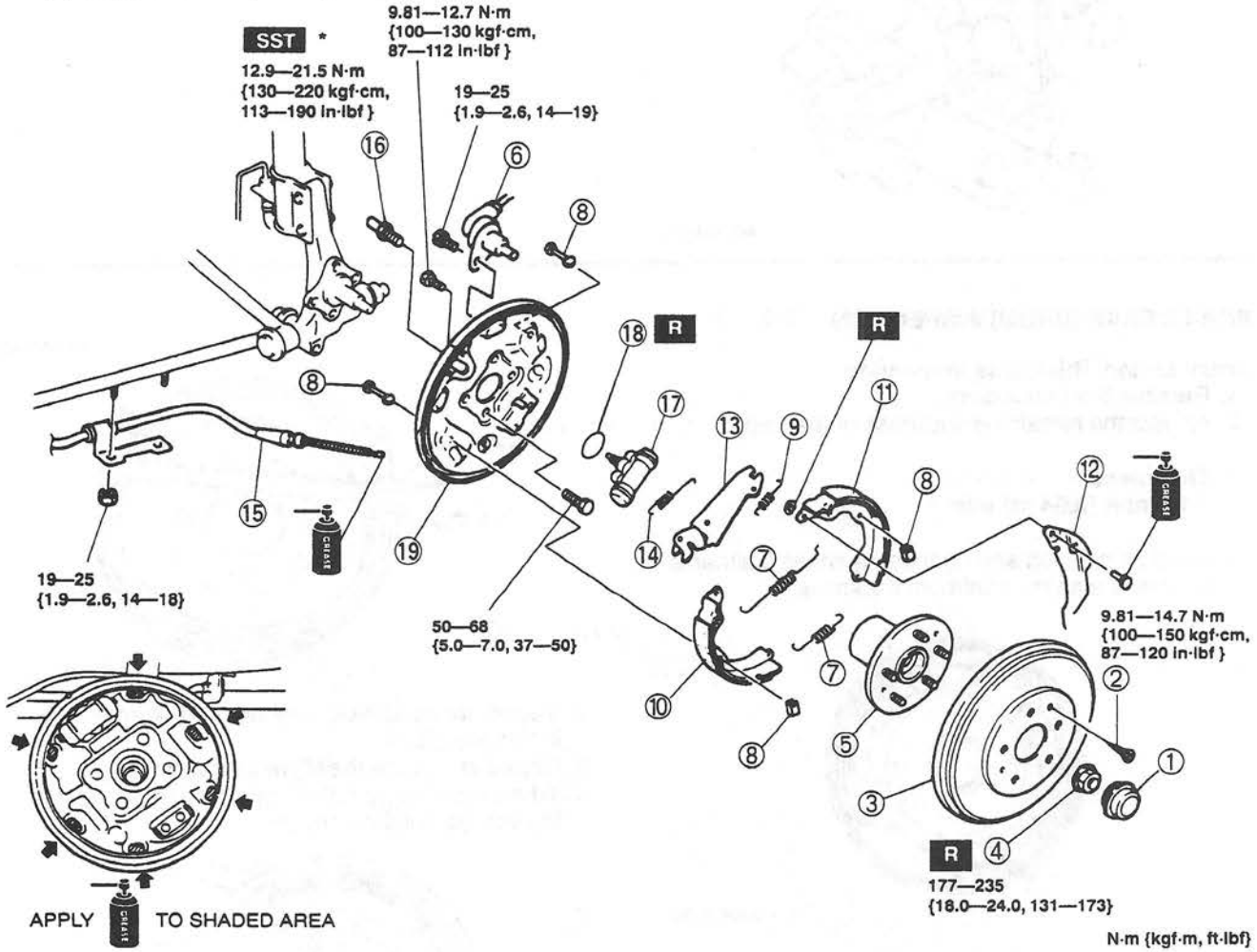

* 49 0259 770B

W6U411WBH

1	Hub cap
2	Screw
3	Brake drum ☞ Removal Note ☞ Installation Note
4	Locknut ☞ 03–11 WHEEL HUB, STEERING KNUCKLE REMOVAL/INSTALLATION, Locknut Removal Note ☞ 03–11 WHEEL HUB, STEERING KNUCKLE REMOVAL/INSTALLATION, Locknut Installation Note
5	Wheel hub
6	ABS wheel-speed sensor (if equipped)
7	Return spring

8	Hold pin and hold spring
9	Anti-rattle spring
10	Leading shoe
11	Trailing shoe
12	Operating lever
13	Quadrant
14	Quadrant spring
15	Parking brake cable
16	Brake pipe
17	Wheel cylinder
18	O-ring
19	Backing plate

Brake Drum Removal Note

- Mark the wheel hub bolt and brake drum before removal for reference during installation.

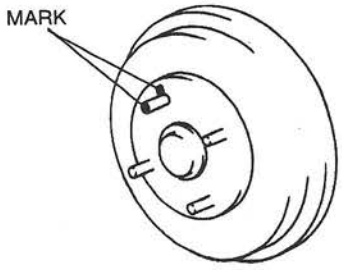

W6U411WBJ

Brake Drum Installation Note

1. Before brake drum installation, inspect the auto adjuster by depressing the brake pedal.
2. Remove any rust or grime on the contact face of the drum brake.
3. Install the brake drum and align the marks made before removal.

WHEEL CYLINDER DISASSEMBLY/ASSEMBLY

W6U411W22

Caution

- **Replace the wheel cylinder assembly if a problem is found.**

1. Disassemble in the order indicated in the table.
2. Assemble in the reverse order of disassembly.

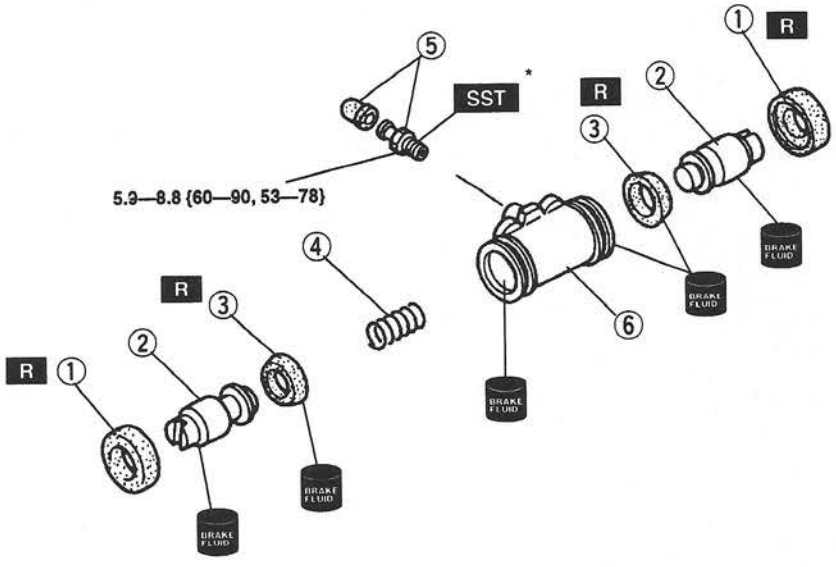

N·m {kgf·cm, in·lbf}

* 49 0259 770B

W6U411WBK

1	Boot
2	Wheel cylinder piston
3	Piston cup

4	Wheel cylinder spring and cap
5	Rubber cap and bleeder screw
6	Wheel cylinder body

04–12 PARKING BRAKE SYSTEM

PARKING BRAKE INSPECTION 04–12–1
PARKING BRAKE ADJUSTMENT 04–12–1
PARKING BRAKE REMOVAL/INSTALLATION 04–12–2

PARKING BRAKE INSPECTION

W6U412W01

1. Pull the parking brake lever a few times.
2. Depress the brake pedal a few times.
3. Inspect the parking brake stroke by pulling the parking brake lever with a force of **98 N {10 kgf, 44 lbf}**.

Stroke
6—8 notches

PARKING BRAKE ADJUSTMENT

W6U412W02

1. Start the engine and depress the brake pedal several times.
2. Stop the engine.
3. Turn the adjusting nut at the front of the parking cable.

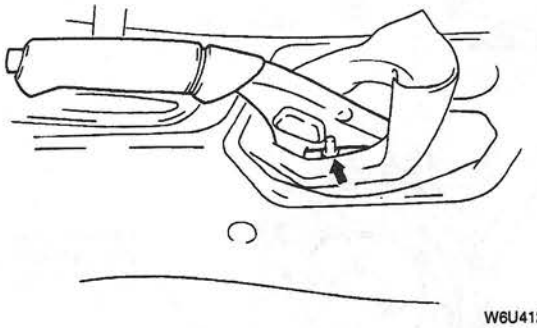

W6U412WA0

4. After adjustment, check the following points:
   (1) Turn the ignition switch to ON, pull the parking brake lever one notch, and check that the parking brake warning light illuminates.
   (2) Verify that the rear brakes do not drag.

PARKING BRAKE REMOVAL/INSTALLATION

W6U412W03

1. Remove the rear console.
2. Remove the exhaust pipe insulator bolts.
3. Remove in the order indicated in the table.
4. Install in the reverse order of removal.
5. Adjust the parking brake stroke.

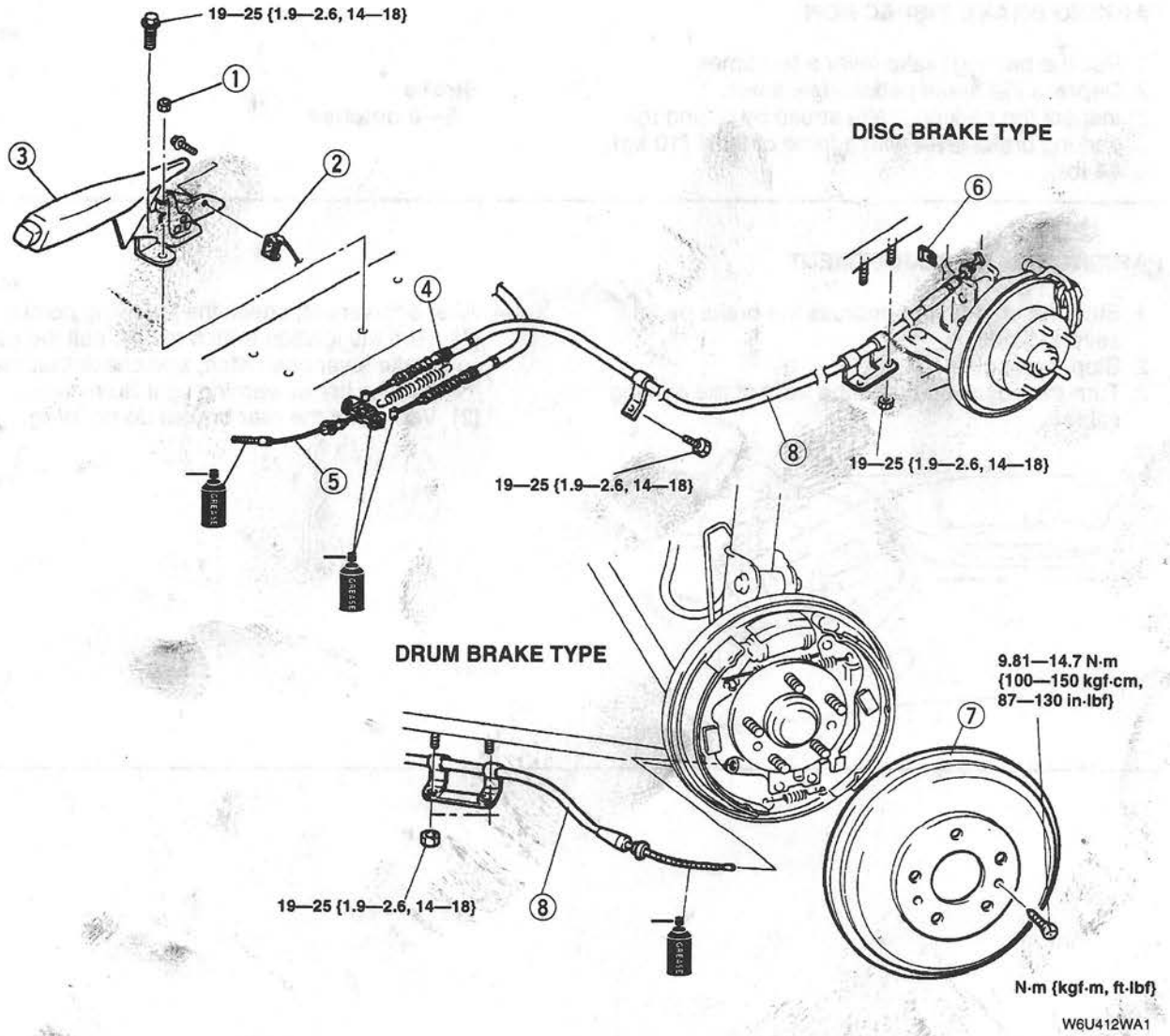

1	Adjusting nut
2	Parking brake switch
3	Parking brake lever
4	Return spring

5	Front cable and equalizer
6	Clip
7	Brake drum
8	Parking brake cable

04–13 ANTILOCK BRAKE SYSTEM

ABS HYDRAULIC UNIT INSPECTION . 04–13–1
System Operation Check 04–13–1
ABS HYDRAULIC UNIT AND CONTROL MODULE REMOVAL/INSTALLATION . 04–13–2
ABS Hydraulic Unit and ABS Control Module Removal/Installation Note ... 04–13–2
ABS Control Module Removal Note .. 04–13–2
ABS Control Module Installation Note . 04–13–3
ABS HARNESS AND INPUT SIGNAL INSPECTION 04–13–4
FRONT ABS WHEEL-SPEED SENSOR REMOVAL/INSTALLATION 04–13–6
FRONT ABS WHEEL-SPEED SENSOR INSPECTION 04–13–6
Clearance Inspection 04–13–6
Resistance Inspection 04–13–6
Voltage Inspection 04–13–6
Voltage Pattern Inspection 04–13–7
REAR ABS WHEEL-SPEED SENSOR REMOVAL/INSTALLATION 04–13–7
REAR ABS WHEEL-SPEED SENSOR INSPECTION 04–13–7

ABS HYDRAULIC UNIT INSPECTION

W6U413W01

System Operation Check

1. Verify that the battery is fully charged. With the ignition switch at ON, verify that the ABS warning light goes off after **2—4 seconds**.
2. If the light stays at ON after **2—4 seconds** the control module detects a failure and will not activate the hydraulic unit. Follow the troubleshooting procedures.
3. Turn the ignition switch to OFF.
4. On level ground, jack up the vehicle and support it evenly on safety stands. Shift the transaxle to neutral (MTX) or N range (ATX).
5. Release the parking brake.
6. Rotate the wheels by hand, and inspect for brake drag.
7. Connect the **SST** (NGS set) to the data link connector. (Refer to 04–01 ANTILOCK BRAKE SYSTEM AND TRACTION CONTROL SYSTEM ON-BOARD DIAGNOSIS.)
8. Select ACTIVE COMMAND MODES.

Caution
- **To prevent damage to the solenoid valve, do not keep the valve ON for more than 5 seconds.**

9. Input LF AV ON command.
10. Depress the brake pedal, and have an assistant to verify that the left front wheel can be turned by hands.
11. If the wheel can not be turned, replace the ABS hydraulic unit component.
12. Depress the brake pedal.

Caution
- **To prevent damage to the solenoid valve, do not keep the valve ON for more than 5 seconds.**

13. Select ACTIVE COMMAND MODES and input the following commands.
    (1) LF AV ON
    (2) LF EV ON
    (3) PMP RLY ON
14. With the brake pedal is still depressed, have an assistant to verify that the brake is released and that the left front wheel can be turned by hands.
15. If the wheel can not be turned, replace the ABS hydraulic unit component.
16. Inspect operation of the remaining wheels in the same manner as steps 8—15 by using appropriate commands.

ABS HYDRAULIC UNIT AND CONTROL MODULE REMOVAL/INSTALLATION

W6U413W02

1. Remove the charcoal canister.
2. Remove in the order indicated in the table.
3. Install in the reverse order of removal.

Note

- The ABS hydraulic unit is not purchased as one part. Replace the ABS hydraulic unit and control module component as one assembly part if the ABS hydraulic unit is malfunctioning.

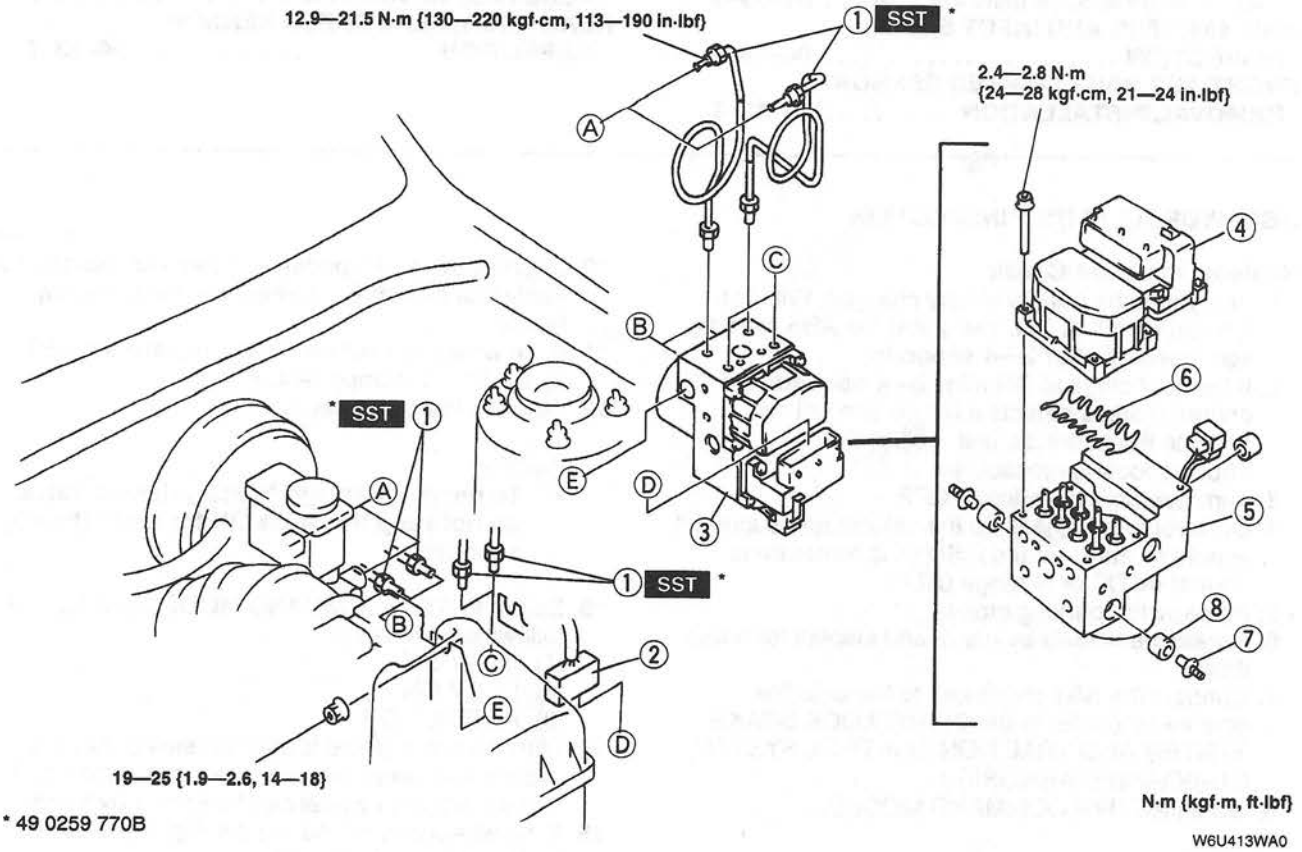

1	Brake pipe
2	Connector
3	ABS hydraulic unit and ABS control module ☞ Removal/Installation Note
4	ABS control module ☞ Removal Note ☞ Installation Note

5	ABS hydraulic unit
6	Spring plate
7	Stud
8	Soft mount

ABS Hydraulic Unit and ABS Control Module Removal/Installation Note

- When removing/installing the ABS hydraulic unit and ABS control module from/to the vehicle, attach protective tape on the HU connector to prevent brake fluid from entering.

ABS Control Module Removal Note

1. Install the screw plugs (supplied in the service part kit) onto the brake pipe holes of the HU.
2. Disconnect the motor connector as follows.

Caution

- **Do not apply force on the looking tab when disconnecting the connector.**

(1) Lift up the tab to unlock the connector by hand.
(2) Pull the connector from the ABS CM by grasping the side of the motor connector.

3. Carefully pull the wiring of the pump motor out of the cable guides.

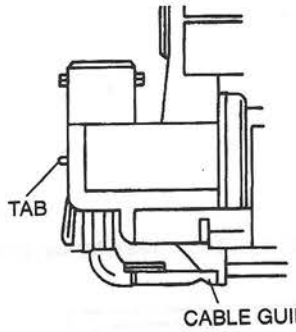

W6U413WA2

4. Secure the HU as shown.
5. Remove the bolts.

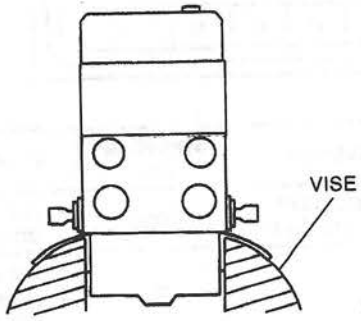

W6U413WA3

6. Protect the HU from damage to the valve body and keep the sealing surface free from foreign materials.

ABS Control Module Installation Note

1. Verify that the sealing surface of the HU is clean. If there are scratches, grooves or dirt, do not mechanically rework. Carefully remove any dirt or seal residue with plastic tools only. The use of chemical solvents is not permitted.
2. Install the spring plate properly. When re-installing, insert the spring plate over the valve bodies in the correct position to preload the spring and to center the solenoid coils.

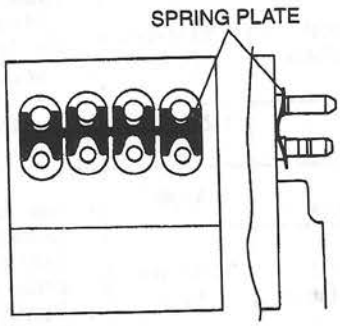

W6U413WA4

3. Carefully fit the coils of the ABS CM over the valve bodies.
4. Locate the ABS CM by placing the new bolts evenly against the housing and tightening them slightly by hands. To aid alignment, the housing may be pressed onto the contact surface by hand while tightening the bolts.
5. Tighten the bolts to the specified torque in the order shown.

Tightening torque
2.4—2.8 N·m {24—28 kgf·cm, 21—24 in·lbf}

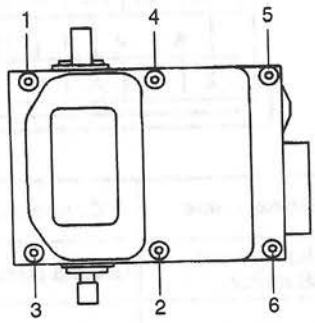

W6U413WA5

6. Visually inspect for all bolts mode contact. The ABS CM must be flush against the housing with no gap in the area of the bolts.
7. Connect the 2-pin connector of the pump motor to the ABS CM. Verify that the spring clip is engaged securely.
8. Clip the wiring back in the cable guide.
9. Reinsert the soft mount if it is fallen out.
10. Inspect flats of two side retaining bolts and position flats vertically by turning bolts as necessary.

ABS HARNESS AND INPUT SIGNAL INSPECTION

W6U413W03

1. Disconnect the ABS CM connector with the ignition switch at OFF.

Caution
- **Be careful not to damage the terminals during inspection.**

2. Insert a thin isolation plate to the short bar of the connector.
3. Attach a wire to the tester lead to avoid damaging the terminals then inspect voltage, resistance or continuity, referring to the table below.

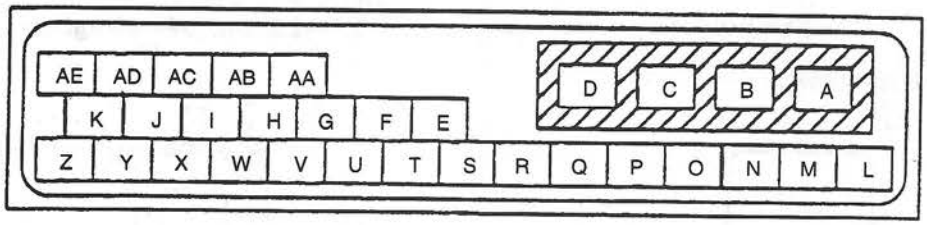

W6U413WA9

Terminal	Signal name	Connected to	Item	Condition	Specification	Possible cause
A	System ground (ABS motor)	Ground point	Continuity	A—ground point (IG SW is at OFF)	Yes	• Harness to ground point
B	Power supply (ABS motor)	Fuse (60 A)	Voltage	B—A	B+	• Fuse (60 A) • Harness (B—fuse (60 A))
C	Power supply (solenoid valve)	Fuse (20 A)	Voltage	C—D	B+	• Fuse (20 A) • Harness (C—fuse (20 A))
D	System ground (signal)	Ground point	Continuity	D—ground point (IG SW is at OFF)	Yes	• Harness to ground point
E*3	TCS OFF light	TCS OFF light	Voltage	E—D (IG SW is at ON)	B+*1	• Harness (E—meter—IG SW)
F	ABS warning light	ABS warning light	Voltage	F—D (IG SW is at ON)	B+*1	• Harness (F—meter—IG SW)
L M (N)*2	RR wheel speed	RR wheel-speed sensor	Voltage	M (N)*2—L vehicle is stopped	0 V (AC)	• Harness (Sensor—ABS CM harness connector) • Sensor, Installation condition
				M (N)*2—L when RR wheel turned 1 revolution per second	0.23 V min. (AC)	
			Resistance	M (N)*2—L	1.28—1.92 kΩ	
O P	RF wheel speed	RF wheel-speed sensor	Voltage	P—O vehicle is stopped	0 V (AC)	• Harness (Sensor—ABS CM harness connector) • Sensor, Installation condition
				P—O when RF wheel turned 1 revolution per second	0.23 V min. (AC)	
			Resistance	P—O	1.28—1.92 kΩ	
Q R	LF wheel speed	LF wheel-speed sensor	Voltage	R—Q vehicle is stopped	0 V (AC)	• Harness (Sensor—ABS CM harness connector) • Sensor, Installation condition
				R—Q when LF wheel turned 1 revolution per second	0.23 V min. (AC)	
			Resistance	R—Q	1.28—1.92 kΩ	

Terminal	Signal name	Connected to	Item	Condition	Specification	Possible cause
S T	LR wheel speed	LR wheel-speed sensor	Voltage	T—S vehicle is stopped	0 V (AC)	• Harness (Sensor—ABS CM harness connector) • Sensor, Installation condition
				T—S when LR wheel turned 1 revolution per second	0.23 V min. (AC)	
			Resistance	T—S	1.28—1.92 kΩ	
V	On-board diagnosis	Data link connector	Continuity	V—Z	No	• Harness (V—D at DLC)
				V—D	No	
				V—D at DLC	Yes	
X*3	TCS (request)	PCM	Voltage	X—D	B+	• Harness (X—PCM)
Y	Brake switch	Brake switch	Voltage	Y—D When brake pedal depressed (IG SW is at ON)	B+	• Harness (AY—brake sw) (when brake light normal) • Brake switch
				Y—D When brake pedal released (IG SW is at ON)	0 V	
Z	Power supply (system)	Ignition switch	Voltage	Z—D (IG SW is at ON)	B+	• Harness, fuse (Z—IG SW)
				Z—D (IG SW is at OFF)	0 V	
AA*3	TCS (engine condition)	PCM	Continuity	AA—PCM	Yes	• Harness (AA—PCM)
AB*3	TCS indicator light	TCS indicator light	Voltage	AB—D (IG SW is at ON)	B+	• Harness (AB—meter)
AD*3	TCS (engine speed)	PCM	Voltage	AD—D (engine is stopped)	0 V or B+	• Harness (AD—PCM)
				AD—D (engine is idling)	0 V—B+	
AE*3	TCS OFF switch	TCS OFF switch	Continuity	AE—D (SW is depressed)	Yes	• Harness (AE—TCS OFF SW) • TCS OFF SW
				AE—D (SW is released)	No	

*1 : When an isolation plate is not inserted to the short bar, voltage is 0 V.

*2 : Models with TCS

*3 : For TCS

FRONT ABS WHEEL-SPEED SENSOR REMOVAL/INSTALLATION

W6U413W04

1. Remove in the order indicated in the table.
2. Install in the reverse order of removal.

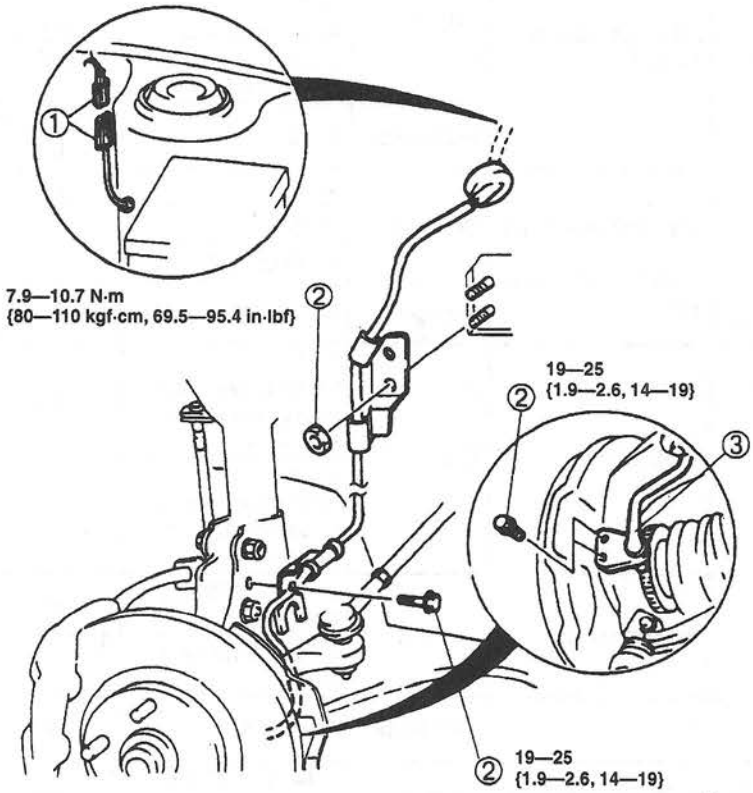

1	Connector
2	Bolt and nut
3	Front ABS wheel-speed sensor

FRONT ABS WHEEL-SPEED SENSOR INSPECTION

W6U413W05

- Remove the wheel and tire, and inspect the sensor for looseness and damage. Replace the sensor as necessary.

Clearance Inspection

- Inspect for clearance between the wheel-speed sensor and the sensor rotor.

Clearance
1.3—2.0 mm {0.0512—0.0787 in}

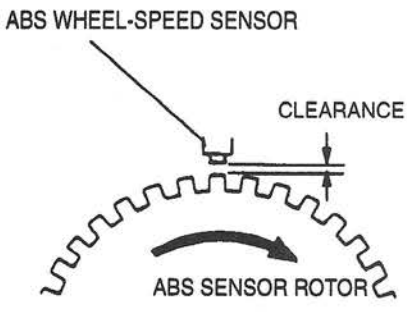

Resistance Inspection

1. Disconnect the ABS wheel-speed sensor connector.
2. Inspect for resistance at the ABS wheel-speed sensor.

Resistance
1.28—1.92 kΩ

Voltage Inspection

1. On level ground, jack up the vehicle and support it evenly on safety stands.
2. Disconnect the ABS wheel-speed sensor connector.
3. Inspect each wheel by rotating it at one revolution per second.

Voltage
0.23 V min. (AC)

4. If not as specified, replace the ABS wheel-speed sensor.

Voltage Pattern Inspection

1. On level ground, jack up the vehicle and support it evenly on safety stands.
2. Disconnect the ABS wheel-speed sensor connector and connect an oscilloscope to the sensor connector.
3. Inspect for voltage pattern by rotating it at one revolution per second.

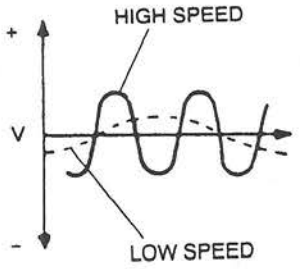

W6U413WAD

REAR ABS WHEEL-SPEED SENSOR REMOVAL/INSTALLATION

W6U413W06

1. Remove the trunk compartment covering. (Refer to 09–17 TRUNK COMPARTMENT COVERING REMOVAL/INSTALLATION.)
2. Remove in the order indicated in the table.
3. Install in the reverse order of removal.

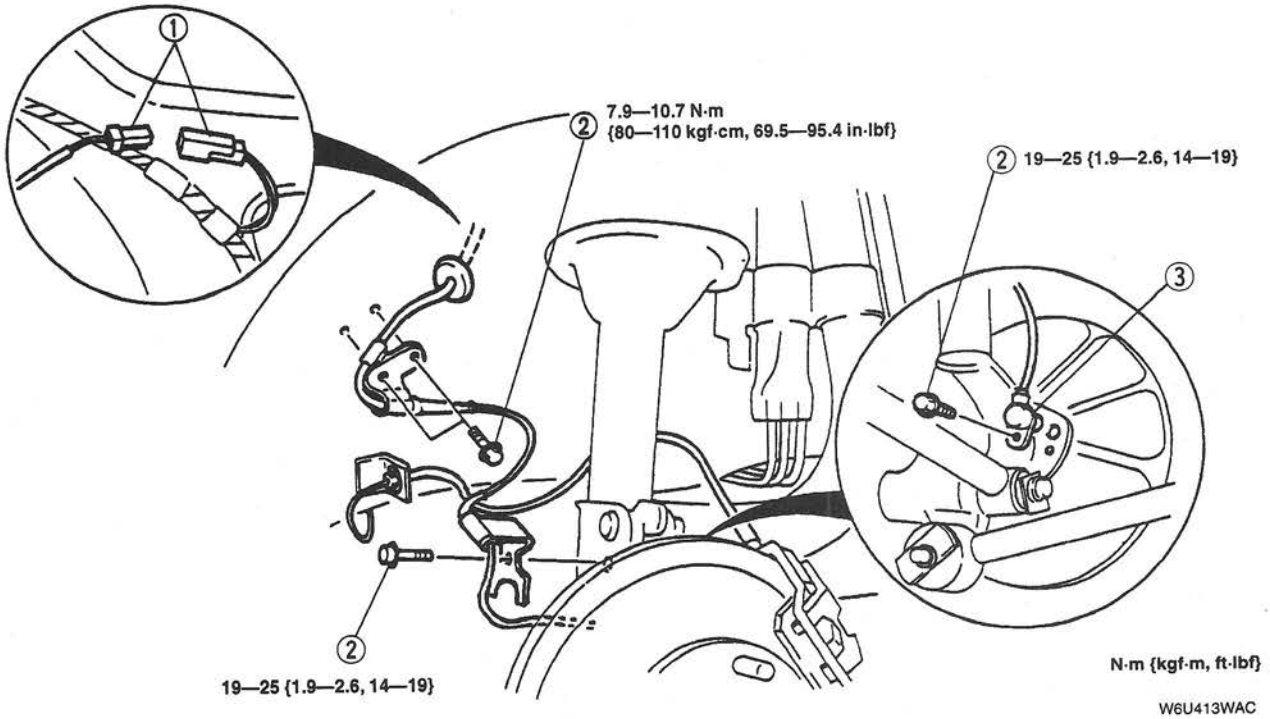

W6U413WAC

1	Connector
2	Bolt
3	Rear ABS wheel-speed sensor

REAR ABS WHEEL-SPEED SENSOR INSPECTION

W6U413W07

- Inspect the rear ABS wheel-speed sensor in the same procedure as the front sensor. (Refer to FRONT ABS WHEEL-SPEED SENSOR INSPECTION.)

04–14 TRACTION CONTROL SYSTEM (TCS)

TCS OPERATION INSPECTION 04–14–1
ABS/TCS CONTROL MODULE REMOVAL/INSTALLATION 04–14–1
ABS/TCS HARNESS AND INPUT SIGNAL INSPECTION 04–14–1
TCS OFF SWITCH REMOVAL/INSTALLATION 04–14–1
TCS OFF SWITCH INSPECTION 04–14–2

TCS OPERATION INSPECTION

W6U414W01

1. Place the front wheels on a chassis roller or jack up the front of the vehicle on level ground and support it on safety stands.
2. Start the engine, and verify that the TCS OFF light is out.

Note
- In order to protect the engine, if engine coolant temperature is extremely low, TCS control is temporarily interrupted until the engine coolant temperature rises. In such cases, the TCS OFF light illuminates.

3. If the light stays on after the engine is started and reaches normal operating temperature, the ABS/TCS control module detects a failure. In that case, turn off the engine and follow the troubleshooting procedures.
4. Shift the transaxle to second (MTX) or D range (ATX).
5. Depress the accelerater pedal for 5 seconds, and verify that the engine speed is held low and the TCS indicator light is flashing.

Note
- If the front wheels rotate for 60 seconds or more, the ABS warning light, TCS indicator light and TCS OFF lights illuminate, and the engine speed increases. In that case, turn the ignition switch to OFF and ON again, then drive the vehicle faster than **10 km/h {6.2 mph}**. Verify that those lights go out. ABS/TCS CM does not memorize DTC.

6. If not as described, follow the troubleshooting procedures.

ABS/TCS CONTROL MODULE REMOVAL/INSTALLATION

W6U414W02

(Refer to 04–13 ABS HYDRAULIC UNIT AND CONTROL MODULE REMOVAL/INSTALLATION.)

ABS/TCS HARNESS AND INPUT SIGNAL INSPECTION

W6U414W03

(Refer to 04–13 ABS HARNESS AND INPUT SIGNAL INSPECTION.)

TCS OFF SWITCH REMOVAL/INSTALLATION

W6U414W04

1. Remove the meter hood. (Refer to 09–17 METER HOOD REMOVAL/INSTALLATION.)
2. Press the hooks of the TCS OFF switch and pull the switch out.
3. Install in the reverse order of removal.

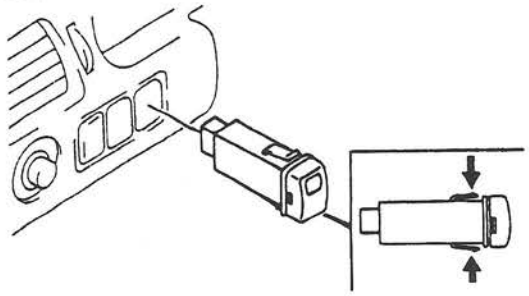

W6U414WA0

TCS OFF SWITCH INSPECTION

W6U414W05

1. Remove the TCS OFF switch.
2. Measure the resistance between B and C of the connector.

Resistance
When switch is pressed: 100 Ω or less
When switch is released: ∞

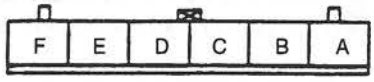

3. If not within the specification, replace the TCS OFF switch.

W6U414WA1

04–50 TECHNICAL DATA

04 BRAKES 04–50–1

04 BRAKES

W6U450W01

Item			Without ABS	With ABS
CONVENTIONAL BRAKE SYSTEM				
Brake pedal	Brake pedal height (mm {in})		193 {7.60}	
	Brake pedal play (mm {in})		7.8—12 {0.31—0.47}	
	Pedal-to-floor clearance (mm {in})		60 {2.4} min	
Power brake unit	Fluid pressure (kPa {kgf/cm^2, psi})	At 0 kPa {0 mmHg, 0 inHg}	880 {9, 30} min.	
		At 66.7 kPa {500 mmHg, 19.7 inHg}	8,830 {90, 1,280} min.	
Dual proportioning valve	Bend portion (kPa {kgf/cm^2, psi})		2940 {30, 430} ±200 {2, 30}	3400 {35, 500} ±295 {3, 43}
	Rear wheel pressure when master cylinder pressure is 5880 kPa {60 kgf/cm^2, 850 psi} (kPa {kgf/cm^2, psi})		3830 {39, 550} ±295 {3, 43}	4170 {42.5, 600} ±390 {4, 60}
Front disc brake	Minimum disc pad thickness (mm {in})		2.0 {0.08}	
	Minimum disc plate thickness (mm {in})		22 {0.87}	
	Disc plate runout limit (mm {in})		0.05 {0.002}	
Rear disc brake	Minimum disc pad thickness (mm {in})		1.0 {0.04}	
	Minimum disc plate thickness (mm {in})		8 {0.31}	
	Disc plate runout limit (mm {in})		0.05 {0.002}	
Rear drum brake	Maximum brake drum diameter (mm {in})		230.1 {9.059}	
	Minimum lining thickness (mm {in})		1.0 {0.04}	
	Clearance between shoe and drum		Automatic adjuster	
Brake fluid	Type		SAE J1703 or FMVSS 116 DOT3	
PARKING BRAKE SYSTEM				
Parking brake lever	Lever stroke when pulled at 98 N {10 kgf, 22 lbf} (notches)		6—8	

04–60 SERVICE TOOLS

04 BRAKES SST 04–60–1

04 BRAKES SST

W6U460W01

49 0259 770B Flare nut wrench  T0259770B	49 B043 001 Adjust gauge 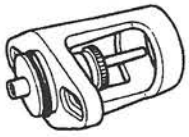 TB043001X	49 U043 0A0 Oil pressure gauge set 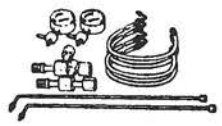 TU0430A0X
49 0208 701A Boot air-out tool  T0208701A	49 0221 600C Disc brake expand tool  T0221600C	49 U043 005 Joint (Part of 49 U043 0A0) 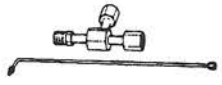 TU043005X
49 E043 003A Turning lock tool 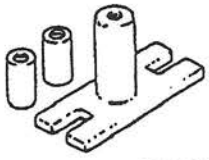 TE043003A	49 B043 004 Socket wrench 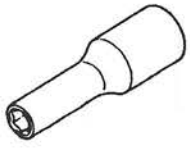 TB043004X	49 U043 004 Oil pressure gauge (Part of 49 U043 0A0)  TU043004X
49 U043 006 Hose (Part of 49 U043 0A0) 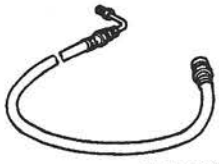 TU043006X	49 T088 0A0 NGS set  TT0880A0X	49 T088 010E Program card (V.4.0)  TT088010E

TRANSMISSION/TRANSAXLE

05 SECTION

TROUBLESHOOTING [LA4A-EL] 05–01A
TROUBLESHOOTING [GF4A-EL] 05–01B
CLUTCH 05–10
MANUAL TRANSAXLE 05–15
MANUAL TRANSAXLE SHIFT MECHANISM 05–16
AUTOMATIC TRANSAXLE [LA4A-EL] 05–17A
AUTOMATIC TRANSAXLE [GF4A-EL] 05–17B
AUTOMATIC TRANSAXLE SHIFT MECHANISM 05–18
TECHNICAL DATA 05–50
SERVICE TOOLS 05–60

05–01A TROUBLESHOOTING [LA4A-EL]

FOREWORD [LA4A-EL] 05–01A–1
AUTOMATIC TRANSAXLE ON BOARD DIAGNOSIS [LA4A-EL] 05–01A–2
- On-Board Diagnosis Test 05–01A–2
- Diagnostic Trouble Code 05–01A–2
- Pinpoint Test 05–01A–7
- Solenoid Body Connector Component 05–01A–31
- Transaxle Range (TR) Switch Connector Component 05–01A–31
- Turbine Shaft Speed (TSS) Sensor Connector Component 05–01A–32

AUTOMATIC TRANSAXLE BASIC INSPECTION [LA4A-EL] 05–01A–32
AUTOMATIC TRANSAXLE SYMPTOM TROUBLESHOOTING [LA4A-EL] 05–01A–33
- Diagnosis Index 05–01A–33
- Quick Diagnosis Chart (I) 05–01A–34
- Quick Diagnosis Chart (I) (Cont'd) 05–01A–34
- Quick Diagnosis Chart (II) 05–01A–35
- Quick Diagnosis Chart (II) (Cont'd) ... 05–01A–36
- Symptom Troubleshooting 05–01A–37

FOREWORD [LA4A-EL]

W6U501W01

Before proceeding with the following troubleshooting,
- Refer to section GENERAL INFORMATION to understand the basic troubleshooting.
- Perform the diagnostic trouble code inspection.
- If a diagnostic trouble code is displayed, proceed with inspection steps for the codes.
- When the engine can be started, perform "ENGINE TUNE-UP". (Refer to 01–10A ENGINE TUNE-UP [FS].)

AUTOMATIC TRANSAXLE ON BOARD DIAGNOSIS [LA4A-EL]

W6U501W02

On-Board Diagnosis Test

Refer to 01–01A ENGINE ON-BOARD DIAGNOSIS [FS], On-Board Diagnosis Test.

Diagnostic Trouble Code

Note

- If the DTC that you want to find is not in the following chart, please refer to the "Diagnostic Trouble Code Number" chart in engine on-board diagnostic. (Refer to 01–01A ENGINE ON-BOARD DIAGNOSIS [FS].)
- DTC's that are not directly related to Mazda vehicles (ones not written in the W/M) may appear on the NGS screen. Please ensure that only those DTC's that are written in the workshop manual are used.

DTC No.	Diagnosed Circuit	Condition	MIL	DC*1	OBD Monitor*2	O/D OFF indicator light
P0102	Mass air flow sensor	Circuit low input	☞ 01–01A ENGINE ON-BOARD DIAGNOSIS [FS]			N/A
P0103	Mass air flow sensor	Circuit high input	☞ 01–01A ENGINE ON-BOARD DIAGNOSIS [FS]			N/A
P0106	EGR boost sensor	Input signal out of self-test range	☞ 01–01A ENGINE ON-BOARD DIAGNOSIS [FS]			N/A
P0107	EGR boost sensor	Input signal out of self-test minimum	☞ 01–01A ENGINE ON-BOARD DIAGNOSIS [FS]			N/A
P0108	EGR boost sensor	Input signal out of self-test maximum	☞ 01–01A ENGINE ON-BOARD DIAGNOSIS [FS]			N/A
P0112	Intake air temperature sensor	Circuit low input	☞ 01–01A ENGINE ON-BOARD DIAGNOSIS [FS]			N/A
P0113	Intake air temperature sensor	Circuit high input	☞ 01–01A ENGINE ON-BOARD DIAGNOSIS [FS]			N/A
P0117	Engine coolant temperature sensor	Circuit low input	☞ 01–01A ENGINE ON-BOARD DIAGNOSIS [FS]			N/A
P0118	Engine coolant temperature sensor	Circuit high input	☞ 01–01A ENGINE ON-BOARD DIAGNOSIS [FS]			N/A
P0122	Throttle position sensor	Circuit low input	☞ 01–01A ENGINE ON-BOARD DIAGNOSIS [FS]			N/A
P0123	Throttle position sensor	Circuit high input	☞ 01–01A ENGINE ON-BOARD DIAGNOSIS [FS]			N/A
P0125	Engine coolant temperature sensor	Insufficient coolant temperature to enter a closed loop fuel control	☞ 01–01A ENGINE ON-BOARD DIAGNOSIS [FS]			N/A
P0131	Heated oxygen sensor (Front)	Circuit low voltage	☞ 01–01A ENGINE ON-BOARD DIAGNOSIS [FS]			N/A
P0133	Heated oxygen sensor (Front)	Circuit low response	☞ 01–01A ENGINE ON-BOARD DIAGNOSIS [FS]			N/A
P0135	Heated oxygen sensor (Front)	Circuit malfunction	☞ 01–01A ENGINE ON-BOARD DIAGNOSIS [FS]			N/A
P0136	Heated oxygen sensor (Rear)	Circuit malfunction	☞ 01–01A ENGINE ON-BOARD DIAGNOSIS [FS]			N/A
P0141	Heated oxygen sensor heater (Rear)	Circuit malfunction	☞ 01–01A ENGINE ON-BOARD DIAGNOSIS [FS]			N/A
P0171	Adaptive fuel control system	System too lean	☞ 01–01A ENGINE ON-BOARD DIAGNOSIS [FS]			N/A
P0172	Adaptive fuel control system	System too rich	☞ 01–01A ENGINE ON-BOARD DIAGNOSIS [FS]			N/A
P0230	Fuel pump	Circuit malfunction	☞ 01–01A ENGINE ON-BOARD DIAGNOSIS [FS]			N/A
P0300	Ignition	Random misfire detected	☞ 01–01A ENGINE ON-BOARD DIAGNOSIS [FS]			N/A
P0301	Ignition	Cylinder No.1 misfire detected	☞ 01–01A ENGINE ON-BOARD DIAGNOSIS [FS]			N/A

DTC No.	Diagnosed Circuit	Condition	MIL	DC*1	OBD Monitor*2	O/D OFF indicator light
P0302	Ignition	Cylinder No.2 misfire detected	☞ 01–01A ENGINE ON-BOARD DIAGNOSIS [FS]			N/A
P0303	Ignition	Cylinder No.3 misfire detected	☞ 01–01A ENGINE ON-BOARD DIAGNOSIS [FS]			N/A
P0304	Ignition	Cylinder No.4 misfire detected	☞ 01–01A ENGINE ON-BOARD DIAGNOSIS [FS]			N/A
P0320	Ignition engine speed	Input circuit malfunction	☞ 01–01A ENGINE ON-BOARD DIAGNOSIS [FS]			N/A
P0325	Knock sensor	Circuit malfunction	☞ 01–01A ENGINE ON-BOARD DIAGNOSIS [FS]			N/A
P0340	Camshaft position sensor	Circuit malfunction (CID)	☞ 01–01A ENGINE ON-BOARD DIAGNOSIS [FS]			N/A
P0400	Exhaust gas recalculation (EGR)	Flow malfunction	☞ 01–01A ENGINE ON-BOARD DIAGNOSIS [FS]			N/A
P0420	Catalyst system	Efficiency below threshold	☞ 01–01A ENGINE ON-BOARD DIAGNOSIS [FS]			N/A
P0421	Catalyst system	Efficiency below threshold (Light off catalyst)	☞ 01–01A ENGINE ON-BOARD DIAGNOSIS [FS]			N/A
P0442	Evaporative emission control system	Leak detected (Small leak)	☞ 01–01A ENGINE ON-BOARD DIAGNOSIS [FS]			N/A
P0443	Evaporative emission control system	Purge control valve circuit malfunction	☞ 01–01A ENGINE ON-BOARD DIAGNOSIS [FS]			N/A
P0446	Evaporative emission control system	Vent control malfunction	☞ 01–01A ENGINE ON-BOARD DIAGNOSIS [FS]			N/A
P0452	Evaporative emission control system	Pressure sensor low input	☞ 01–01A ENGINE ON-BOARD DIAGNOSIS [FS]			N/A
P0453	Evaporative emission control system	Pressure sensor high input	☞ 01–01A ENGINE ON-BOARD DIAGNOSIS [FS]			N/A
P0455	Evaporative emission control system	Control leak detected (Gross leak)	☞ 01–01A ENGINE ON-BOARD DIAGNOSIS [FS]			N/A
P0460	Fuel gauge sender unit	Circuit malfunction (Open/short, functional)	☞ 01–01A ENGINE ON-BOARD DIAGNOSIS [FS]			N/A
P0500	Vehicle speed sensor	Sensor malfunction	☞ 01–01A ENGINE ON-BOARD DIAGNOSIS [FS]			N/A
P0505	Idle air control system	System malfunction	☞ 01–01A ENGINE ON-BOARD DIAGNOSIS [FS]			N/A
P0603	PCM	Keep alive memory (KAM) test error	☞ 01–01A ENGINE ON-BOARD DIAGNOSIS [FS]			N/A
P0605	PCM	Read only memory (ROM) test error	☞ 01–01A ENGINE ON-BOARD DIAGNOSIS [FS]			N/A
P0704	Clutch switch	Input circuit malfunction	☞ 01–01A ENGINE ON-BOARD DIAGNOSIS [FS]			N/A
P0707	TR switch	TR out of range Shorted circuit or sensor	ON	2	CCM	OFF
P0708		TR circuit high or open	ON	2	CCM	OFF

DTC No.	Diagnosed Circuit	Condition	MIL	DC*1	OBD Monitor*2	O/D OFF indicator light
P0712	TFT sensor	150 °C {302 °F} indicates TFT circuit grounded (KOER, KOEO)	OFF	2	CCM	FLASH
		150 °C {302 °F} indicates TFT circuit grounded (continuous)				
P0713		–40 °C {–40 °F} indicates TFT sensor circuit open (KOER, KOEO)	OFF	2	CCM	FLASH
		–40 °C {–40 °F} indicates TFT sensor circuit open (continuous)				
P0715	TSS sensor	Insufficient input from TSS sensor	ON	2	CCM	OFF
P0731	SS1, SS2, or internal parts	Incorrect 1GR ratio	OFF	2	CCM	FLASH
P0732		Incorrect 2GR ratio	OFF	2	CCM	FLASH
P0733		Incorrect 3GR ratio	OFF	2	CCM	FLASH
P0734		Incorrect 4GR ratio	OFF	2	CCM	FLASH
P0741	TCC solenoid	TCC control engagement error	OFF	2	CCM	FLASH
P0743		TCC solenoid circuit failure during self-test	ON	2	CCM	OFF
P0750	SS1	SS1 circuit failure	ON	2	CCM	OFF
P0751		SS1 hydraulic/mechanical malfunction	ON	2	CCM	OFF
P0755	SS2	SS2 circuit malfunction	ON	2	CCM	OFF
P0756		SS2 hydraulic/mechanical malfunction	ON	2	CCM	OFF
P1001	KOER aborted	KOER not able to complete	☞ 01–01A ENGINE ON-BOARD DIAGNOSIS [FS]			N/A
P1100	Mass air flow sensor	Sensor intermittent	☞ 01–01A ENGINE ON-BOARD DIAGNOSIS [FS]			N/A
P1101	Mass air flow sensor	Input signal out of self-test range	☞ 01–01A ENGINE ON-BOARD DIAGNOSIS [FS]			N/A
P1112	Intake air temperature sensor	Sensor intermittent	☞ 01–01A ENGINE ON-BOARD DIAGNOSIS [FS]			N/A
P1116	Engine coolant temperature sensor	Input signal out of self-test range	☞ 01–01A ENGINE ON-BOARD DIAGNOSIS [FS]			N/A
P1117	Engine coolant temperature sensor	Sensor intermittent	☞ 01–01A ENGINE ON-BOARD DIAGNOSIS [FS]			N/A
P1120	Throttle position sensor	Out of range low	☞ 01–01A ENGINE ON-BOARD DIAGNOSIS [FS]			N/A
P1121	Throttle position sensor	Input signal inconsistent with MAF sensor	☞ 01–01A ENGINE ON-BOARD DIAGNOSIS [FS]			N/A
P1124	Throttle position sensor	Input signal out of self-test range	☞ 01–01A ENGINE ON-BOARD DIAGNOSIS [FS]			N/A
P1125	Throttle position sensor	Circuit intermittent	☞ 01–01A ENGINE ON-BOARD DIAGNOSIS [FS]			N/A
P1127	Heated oxygen sensor heater	Exhaust system too cool	☞ 01–01A ENGINE ON-BOARD DIAGNOSIS [FS]			N/A

DTC No.	Diagnosed Circuit	Condition	MIL	DC*1	OBD Monitor*2	O/D OFF indicator light
P1130	Heated oxygen sensor (Front)	Lack of HO2S 11 switch adaptive fuel at limit	☞ 01–01A ENGINE ON-BOARD DIAGNOSIS [FS]			N/A
P1131	Heated oxygen sensor (Front)	Lack of HO2S 11 switch sensor indicates lean	☞ 01–01A ENGINE ON-BOARD DIAGNOSIS [FS]			N/A
P1132	Heated oxygen sensor (Front)	Lack of HO2S 11 switch sensor indicates rich	☞ 01–01A ENGINE ON-BOARD DIAGNOSIS [FS]			N/A
P1137	Heated oxygen sensor (Rear)	Lack of HO2S 12 switch sensor indicates lean	☞ 01–01A ENGINE ON-BOARD DIAGNOSIS [FS]			N/A
P1138	Heated oxygen sensor (Rear)	Lack of HO2S 12 switch sensor indicates rich	☞ 01–01A ENGINE ON-BOARD DIAGNOSIS [FS]			N/A
P1250	Fuel pressure regulator control solenoid valve	Circuit malfunction	☞ 01–01A ENGINE ON-BOARD DIAGNOSIS [FS]			N/A
P1409	EGR valve (Stepper motor)	Malfunction	☞ 01–01A ENGINE ON-BOARD DIAGNOSIS [FS]			N/A
P1450	Evaporative emission control system	Unable to bleed up fuel tank vacuum	☞ 01–01A ENGINE ON-BOARD DIAGNOSIS [FS]			N/A
P1451	Evaporative emission control system	Vent control valve malfunction (Open/short)	☞ 01–01A ENGINE ON-BOARD DIAGNOSIS [FS]			N/A
P1452	Evaporative emission control system	Unable to bleed up vacuum in tank	☞ 01–01A ENGINE ON-BOARD DIAGNOSIS [FS]			N/A
P1460	Wide open throttle air conditioning cutoff	Circuit malfunction	☞ 01–01A ENGINE ON-BOARD DIAGNOSIS [FS]			N/A
P1464	Air conditioner (A/C)	Demand out of self-test range	☞ 01–01A ENGINE ON-BOARD DIAGNOSIS [FS]			N/A
P1474	Fan control system	Cooling fan control primary circuit malfunction	☞ 01–01A ENGINE ON-BOARD DIAGNOSIS [FS]			N/A
P1479	Fan control system	Condenser fan control primary circuit malfunction	☞ 01–01A ENGINE ON-BOARD DIAGNOSIS [FS]			N/A
P1487	EGR boost solenoid valve	Circuit malfunction	☞ 01–01A ENGINE ON-BOARD DIAGNOSIS [FS]			N/A
P1501	Vehicle speed sensor	Input signal out of self-test range	☞ 01–01A ENGINE ON-BOARD DIAGNOSIS [FS]			N/A
P1504	Idle air control (IAC) system	Circuit intermittent	☞ 01–01A ENGINE ON-BOARD DIAGNOSIS [FS]			N/A
P1506	Idle air control (IAC) system	Overspeed error	☞ 01–01A ENGINE ON-BOARD DIAGNOSIS [FS]			N/A
P1507	Idle air control (IAC) system	Underspeed error	☞ 01–01A ENGINE ON-BOARD DIAGNOSIS [FS]			N/A
P1602	Immobilizer system	Communication error (Immobilizer unit – ECM/PCM)	☞ 01–01A ENGINE ON-BOARD DIAGNOSIS [FS]			N/A
P1603	Immobilizer system	No ID in ECM/PCM	☞ 01–01A ENGINE ON-BOARD DIAGNOSIS [FS]			N/A
P1604	Immobilizer system	No codeword in ECM/PCM	☞ 01–01A ENGINE ON-BOARD DIAGNOSIS [FS]			N/A
P1621	Immobilizer system	Codeword unmuch	☞ 01–01A ENGINE ON-BOARD DIAGNOSIS [FS]			N/A
P1622	Immobilizer system	ID unmuch	☞ 01–01A ENGINE ON-BOARD DIAGNOSIS [FS]			N/A
P1623	Immobilizer system	Cord word/ID write/read error	☞ 01–01A ENGINE ON-BOARD DIAGNOSIS [FS]			N/A

DTC No.	Diagnosed Circuit	Condition	MIL	DC*1	OBD Monitor*2	O/D OFF indicator light
P1624	Immobilizer system	Communication counter	☞ 01–01A ENGINE ON-BOARD DIAGNOSIS [FS]			N/A
P1650	Power steering pressure sensor	Out of self-test range	☞ 01–01A ENGINE ON-BOARD DIAGNOSIS [FS]			N/A
P1701	TSS circuit	TSS intermittent	OFF	2	CCM	FLASH
P1702	TR circuit	TR intermittent	OFF	2	CCM	OFF
P1703	Brake switch	Out of self-test range	☞ 01–01A ENGINE ON-BOARD DIAGNOSIS [FS]			N/A
P1705	TR circuit	TR indicates wrong position during KOEO	OFF	2	CCM	OFF
P1711	TFT sensor	ATF is not at operating temperature during self-test	OFF	2	CCM	OFF
P1742	TCC solenoid	TCC solenoid failed on (MIL turned on)	ON	2	CCM	OFF
P1743		TCC solenoid failed on (TCIL turned on)	ON	1	CCM	FLASH
P1744		TCC system malfunction (stuck off)	ON	2	CCM	OFF
P1746	EPC solenoid	Open PCM output driver	OFF	2	CCM	FLASH
P1747		EPC solenoid circuit failure, shorted to ground or open	ON	2	CCM	OFF
P1751	SS1	SS1 circuit failure	OFF	2	CCM	OFF
P1756	SS2	SS2 electrical malfunction	OFF	2	CCM	OFF
P1767	TCC solenoid	TCC solenoid circuit failure during self-test	OFF	2	CCM	FLASH
P1780	O/D OFF switch	O/D OFF switch is not cycled during self-test	OFF	2	CCM	OFF
P1783	TFT sensor	ATF temperature exceeded 132 °C {270 °F}	OFF	1	CCM	FLASH
P1788	3–2T/CCS	Circuit open or PCM drive circuit failure during self-test	OFF	2	CCM	FLASH
P1789		Circuit shorted during self-test	OFF	2	CCM	FLASH

*1 : DC signifies the number of consecutive drive cycles required to illuminate the MIL.
*2 : Appropriate OBD II Monitor.
N/A : Not Available

Caution

- **Do not disconnect the battery to clear diagnostic trouble codes. This will erase the keep alive memory information which may cause a drivability concern.**
- **After repairing a failure, perform the After-repair Procedures to verify the fault has been corrected.**

Pinpoint Test
Pinpoint test A

DTC	**P0750**	**Shift solenoid No.1 (SS1) circuit failure**
	P0755	**Shift solenoid No.2 (SS2) circuit malfunction**
	P0731	**SS1, SS2, or internal parts incorrect 1GR ratio**
	P0732	**SS1, SS2, or internal parts incorrect 2GR ratio**
	P0733	**SS1, SS2, or internal parts incorrect 3GR ratio**
	P0734	**SS1, SS2, or internal parts incorrect 4GR ratio**
	P0751	**SS1 hydraulic/mechanical malfunction**
	P0756	**SS2 hydraulic/mechanical malfunction**
	P1751	**SS1 circuit failure**
	P1756	**SS2 electrical malfunction**
DESCRIPTION		This pinpoint test is intended to diagnose the following components: • Transaxle wiring harness, SS1, SS2, power circuit • PCM
POSSIBLE CAUSE		• Engine: Performance, cooling, brakes • Electrical: Battery, input sensors, wiring harnesses • Transaxle: Internal transaxle components, linkages, cooling

STEP	INSPECTION		ACTION
A1	**ELECTRONIC DIAGNOSTICS** • Check that the solenoid body connector is fully seated, terminals are fully engaged in the connector and in good condition before proceeding. • Connect NGS tester. • Perform KOEO test until continuous memory DTC have been displayed. • Enter output test mode. ☞ 01–01A ENGINE ON-BOARD DIAGNOSIS [FS] • Select SS1 and SS2 PIDs. • Cycle SS1 OFF/ON by selecting stop/start mode in output test mode "ALL ON". • Set "ALL OFF" mode. • Cycle SS2 ON/OFF by selecting STOP/START mode in output test mode. • Does SS1 and SS2 PIDs cycle?	Yes	Go to next step.
		No	If vehicle did not enter output state (Diagnostic test mode (DTM)). ☞ 01–01A ENGINE ON-BOARD DIAGNOSIS [FS]
A2	**CHECK ELECTRICAL SIGNAL OPERATION** **Caution** • **Removing the solenoid body connector by prying with a screwdriver will damage the connector. Remove the solenoid body connector by pushing on the wire tab and pulling on the wiring harness.** • Disconnect solenoid body connector. • Using a mirror, inspect both ends of the connector for damaged or pushed out pins, corrosion, loose wires, and missing or damaged seals. • Refer to connector schematic and table of solenoid body. ☞ Solenoid Body Connector Component • Connect volt-ohm meter (VOM)/digital volt-ohm meter (DVOM) positive test lead to power circuit and negative test lead to the suspected solenoid circuit of the transaxle vehicle harness connector. • VOM/DVOM ON 20 Volt scale. • While observing DVOM, (Follow procedures described in step A1) cycle solenoid output ON and OFF. • Does the suspected solenoid output voltage change at least 0.5 volt?	Yes	Go to A5.
		No	Go to next step.

STEP	INSPECTION		ACTION
A3	**CHECK CONTINUITY OF SOLENOID SIGNAL AND POWER HARNESS CIRCUITS** • Key off. • Solenoid body connector disconnected (Transaxle connector). • Disconnect PCM. Inspect for damaged or pushed out pins, corrosion, loose wires, etc. Service as required. • Install breakout box, leave PCM disconnected. • Refer to connector schematic and table of solenoid body. ☞ Solenoid Body Connector Component • Measure resistance between PCM signal test pin (27 or 1) at the breakout box and signal pin at solenoid body connector. • Measure resistance between PCM test pin (71/97) at the breakout box and power circuit pin at solenoid body connector. • Is each resistance less than 5.0 ohms?	Yes	Go to next step.
		No	Service open circuit(s). Remove breakout box. Reconnect all components. Rerun OBD tests.
A4	**CHECK TEST PIN 27.1 FOR SHORTS TO POWER AND GROUND** • Breakout box is installed, PCM is disconnected. • Solenoid body connector is disconnected. • Refer to connector schematic and table of solenoid body. ☞ Solenoid Body Connector Component Measure following voltages • Between test pin 27 and 71 • Between test pin 27 and 97 • Between test pin 27 and 77 • Between test pin 27 and 103 • Between test pin 27 and 91 • Between test pin 1 and 71 • Between test pin 1 and 97 • Between test pin 1 and 77 • Between test pin 1 and 103 • Between test pin 1 and 91 • Is each resistance greater than 10,000 ohms?	Yes	Go to next step.
		No	Service short circuit. Remove breakout box. Reconnect all components. Rerun OBD tests.
A5	**SOLENOID FUNCTIONAL TEST** • Ensure that the harness is disconnected at the transaxle. • Install transaxle tester at the solenoid body connecter. • Using tests outlined under tester instructions, Perform the solenoid voltage test. **Note** • LED will illuminate "GREEN" when solenoid is activated and illuminate "OFF" when deactivated. • LED will illuminate "RED" if activated solenoid is shorted to BAT+. • LED will remain "OFF" if an activated solenoid is shorted to ground or no continuity. • Do the solenoids activate? (LED GREEN)	Yes	Go to next step.
		No	Go to A7.
A6	**TRANSAXLE DRIVE TEST** • Perform the drive test. • Does the vehicle upshift when commanded by the tester? ☞ 05–17A ELECTRICAL SYSTEM COMPONENTS [LA4A-EL]	Yes	Replace the PCM. Reconnect all components. Rerun OBD tests. If symptom still present. ☞ 05–01A AUTOMATIC TRANSAXLE SYMPTOM TROUBLESHOOTING [LA4A-EL], Shift concern
		No	Go to next step.

STEP	INSPECTION		ACTION
A7	**CHECK RESISTANCE OF SOLENOID** **Note** • Refer to the transaxle tester for terminal location. • Bench/drive switch in BENCH mode. • Rotate gear selector switch to OHMS **CHECK** position. • Connect ohmmeter negative lead to the SS1 jack and the positive lead to VPWR jack on tester. This is to test SS1. • Record resistance. • Connect ohmmeter negative lead to the SS2 jack and the positive lead to VPWR jack on tester. This is to test SS2. • Are all the shift solenoid resistances between 12 and 22 ohms?	Yes	Go to next step.
		No	Replace Solenoid Body Component. Record and erase codes. Rerun OBD tests.
A8	**CHECK SOLENOID FOR SHORT TO GROUND** • Check for continuity between BAT- (engine ground) and appropriate jack by using an ohmmeter or other low current tester (less than 200 milliamps). Solenoid / Tester Jack SS1 / SS1/VPWR SS2 / SS2/VPWR W6U501WA0 • Connection should show infinite resistance (no continuity). • Is there continuity?	Yes	Replace Solenoid Body Component. Record and erase codes. Rerun OBD tests.
		No	☞ 05–01A AUTOMATIC TRANSAXLE SYMPTOM TROUBLESHOOTING [LA4A-EL]

SS1 always ON	Gear selector position				SS2 always ON	Gear selector position			
	OD	D	2	1*		OD	D	2	1*
PCM gear commanded	Actual gear obtained				PCM gear commanded	Actual gear obtained			
1	1	1	—	1	1	1	1	—	4
2	1	1	1	1	2	2	2	2	3
3	4	4	4	4	3	2	2	2	3
4	4	—	—	—	4	1	1	—	—
Also no reverse									
SS1 always OFF	Gear selector position				SS2 always OFF	Gear selector position			
	OD	D	2	1*		OD	D	2	1*
PCM gear commanded	Actual gear obtained				PCM gear commanded	Actual gear obtained			
1	2	2	—	2	1	4	4	—	1
2	2	2	2	2	2	3	3	3	1
3	3	3	3	3	3	3	3	3	2
4	3	—	—	—	4	4	—	—	—

* : When a manual pull-in occurs above a calibrated speed, the transaxle will not downshift from the higher gear until the vehicle speed drops below this calibrated speed.

Pinpoint test BA

KOEO, KOER DTC P0712	**Transaxle fluid temperature (TFT) 150 °C {302 °F} indicates TFT circuit grounded**
DESCRIPTION	Self-test diagnostic trouble code (DTC) P0712 indicates a TFT sensor circuit input below the minimum acceptable voltage.
POSSIBLE CAUSE	• Fluid level not as specified • Damaged TFT sensor • Short to TFT sensor ground circuit in TFT signal harness circuit • Damaged PCM

STEP	INSPECTION		ACTION
BA1	**KEY ON ENGINE ON (KOEO) AND KEY ON ENGINE RUNNING (KOER) DTC P0712: ATTEMPT TO INDUCE OPPOSITE CONDITION** • Key off. • Connect NGS tester to DLC. • Disconnect transaxle connector. Inspect for damaged or pushed out pins, corrosion, loose wires, etc. service as necessary. • Activate KOEO and KOER self-tests (transaxle connector remains disconnected). • Is DTC P0713 present? **Note** • Disregard any other DTCs generated at this time.	Yes	The fault that produced DTC P0712 is not within the TFT harness circuits or the PCM. Go to BA4.
		No	The opposite condition could not be induced. Go to next step.
BA2	**CHECK CONSTANT VOLTAGE AT THE THROTTLE POSITION SENSOR** • Key off. • Transaxle connector disconnected. • Disconnect throttle position (TP) sensor. • KOER. • Measure voltage between the TP sensor VREF and TP sensor ground circuits at the TP sensor vehicle harness connector. • Is voltage between 4.0 and 6.0 volts?	Yes	VREF voltage is in range. Reconnect TP sensor. Go to next step.
		No	VREF voltage is out of range. Reconnect transaxle connector. Go to reference voltage test. ☞ 01–40A POWERTRAIN CONTROL MODULE (PCM) INSPECTION [FS]
BA3	**CHECK TFT SIGNAL CIRCUIT FOR SHORTS TO GROUND AND TFT SENSOR GROUND CIRCUIT** • Key off. • Transaxle connector disconnected. • Disconnect PCM. Inspect for damaged or pushed out pins, corrosion, loose wires, etc. Service as necessary. • Install breakout box, leave PCM disconnected. • Measure resistance between test pin 37 and Test Pins 24, 61, 76, 103 and 91 at the breakout box. • Is each resistance greater than 10,000 ohms?	Yes	Repalace damaged PCM. Remove breakout box. Reconnect all components. Rerun OBD test.
		No	Service short circuit between TFT SIGNAL and POWER GROUND or TFT SENSOR GROUND CIRCUIT. Reconnect all components. Remove breakout box. Rerun OBD test.
BA4	**KOEO & KOER DTC P0712 — ATTEMPT TO INDUCE OPPOSITE CONDITION** • Key off. • Disconnect solenoid body connector. • Using a mirror, inspect both ends of the connector for damaged or pushed out pins, corrosion, loose wires, and missing or damaged seals. • With solenoid body connector still disconnected, perform KOEO and KOER tests. **Note** • Disregard any other DTCs generated at this time. • Is DTC P0713 present?	Yes	The fault that produced DTC P0712 is not within the TFT harness circuits or the PCM. Go to Pinpoint test BC.
		No	The opposite condition could not be induced. Go to next step.

STEP	INSPECTION		ACTION
BA5	**CHECK VREF AT THROTTLE POSITION SENSOR** • Key off. • Solenoid body connector disconnected. • TP sensor disconnected. • Key on, engine off. • Measure voltage between the TP sensor VREF and TP sensor ground circuits at TP sensor connector. • Is voltage between 4.0 and 6.0 volts?	Yes	Reconnect all components. Unable to duplicate or identify fault at this time. Intermittent poor connection or component malfunction (Repair or repalace as necessary).
		No	VREF voltage is out of range. Reconnect TP and solenoid body connectors. Go to reference voltage. ☞ 01–40A POWERTRAIN CONTROL MODULE (PCM) INSPECTION [FS]

Pinpoint test BB

CONTINUOUS DTC P0712	**Transaxle fluid temperature (TFT) 150 °C {302 °F} indicates TFT circuit grounded**
DESCRIPTION	Diagnostic trouble code (DTC) P0712 indicates a TFT sensor circuit input below the minimum acceptable voltage
POSSIBLE CAUSE	• Fluid level is not as specified • Damaged TFT sensor • Short to GND or TFT sensor ground circuit in TFT signal harness circuit • Damaged powertrain control module (PCM)

STEP	INSPECTION		ACTION
BB1	**CONTINUOUS MEMORY DTC P0712: VERIFY TFT SIGNAL VOLTAGE** • Connect NGS tester to DLC. • Key on, engine off (KOEO). • Access TFT PID with a NGS tester. • Is TFT PID voltage less than 0.5 volts?	Yes	The TFT signal voltage is less than the acceptable minimum, but is not intermittent. Go to step BA1.
		No	The fault that produced continuous memory DTC P0712 is intermittent. Go to next step.
BB2	**WIGGLE TEST TFT SENSOR HARNESS CIRCUITS** • Key on, engine off. • Access TFT PID with a NGS tester. • Observe TFT PID for an indication of a fault while performing the following: • Shake, wiggle and bend TFT signal and TFT sensor ground circuits between transaxle and PCM. A fault is indicated by a sudden change in TFT PID voltage. • Is a fault indicated?	Yes	Isolate fault and service as necessary. Reconnect all components. Complete PCM. Reset to clear DTCs. Rerun OBD test.
		No	Reconnect all components. Unable to duplicate or identify fault at this time. Intermittent poor connection or component malfunction (Repair or repalace as necessary).

Pinpoint test BC

KOEO, KOER DTC P0713	**Transaxle fluid temperature (TFT) –40 °C {–40 °F} indicates TFT sensor circuit open**
DESCRIPTION	Self-test diagnostic trouble code (DTC) P0713 indicates a TFT sensor circuit input above the maximum acceptable voltage.
POSSIBLE CAUSE	• Fluid level is not as specified • Damaged TFT sensor • Short to power circuit in TFT signal harness circuit • Open in TFT signal or TFT sensor ground harness circuit • Damaged PCM

STEP	INSPECTION		ACTION
BC1	**KEY ON ENGINE OFF (KOEO) AND KEY ON ENGINE RUNNING (KOER) DTC P0713: ATTEMPT TO INDUCE OPPOSITE CONDITION** • Key off. • Disconnect transaxle bulkhead connector. • Inspect for damaged or pushed out pins, corrosion, loose wires, etc. Service as necessary. • Insert a jumper from TFT signal circuit to TFT sensor ground circuit at the transaxle vehicle harness connector. • Connect NGS tester to DLC. • Activate KOEO and KOER self-tests. • Is DTC P0712 present? **Note** • Disregard any other DTCs generated at this time. If not DTCs are generated (module not responding), then immediately go to step BC3.	Yes	The fault that produced DTC P0713 is not within the TFT harness circuits or the PCM. Remove jumper wire. Go to BC4.
		No	The opposite condition could not be induced. Remove jumper wire. Go to next step.
BC2	**CHECK CONTINUITY OF TFT SIGNAL AND TFT SENSOR GROUND CIRCUITS** • Key off. • Transaxle connector disconnected. • Disconnect PCM. Inspect for damaged or pushed out pins, corrosion, loose wires, etc. Service as necessary. • Install breakout box, leave PCM disconnected. • Measure resistance between TFT signal circuit at the transaxle vehicle harness connector and test pin 37 at the breakout box. • Measure resistance between TFT sensor ground circuit at the transaxle vehicle harness connector and test pin 91 at the breakout box. • Is each resistance less than 5.0 ohms?	Yes	Go to next step.
		No	Service open in TFT signal or TFT sensor ground harness circuit. Remove breakout box. Reconnect all components. Rerun OBD test.
BC3	**CHECK FOR TFT SIGNAL CIRCUIT SHORT TO POWER** • Key off. • Transaxle connector disconnected. • Breakout box installed, PCM disconnected. • Key on, engine off. • Measure voltage between test pin 37 and test pin 77 or 103 at the breakout box. • Key off. • Was the voltage greater than 2.0 volts?	Yes	Service short to power in TFT signal harness circuit. Remove breakout box. Reconnect all components. Rerun OBD test.
		No	Replace damaged PCM. Remove breakout box. Reconnect all components. Rerun OBD test.

STEP	INSPECTION		ACTION
BC4	**KOEO & KOER DTC P0713 — ATTEMPT TO INDUCE OPPOSITE CONDITION** • Key off. • Disconnect solenoid body connector. • Using a mirror, inspect both ends of the connector for damaged or pushed out pins, corrosion, loose wires, and missing or damaged seals. • Insert a jumper from TFT signal circuit to TFT sensor ground circuit at solenoid body connector. • Perform KOEO and KOER tests. **Note** • Disregard any other DTCs generated at this time. If no DTCs are generated (module not responding), then immediately go to BC3. • Is DTC P0712 present?	Yes	The fault that produced DTC P0713 is not within the TFT harness circuits or the PCM. Remove the jumper wire. Go to pinpoint test BA.
		No	The opposite condition could not be induced. Remove jumper wire. Go to next step.
BC5	**CHECK CONTINUITY OF TFT SIGNAL AND TFT SENSOR GROUND CIRCUITS** • Key off. • Solenoid body connector disconnected. • Disconnect PCM. Inspect for damaged or pushed out pins, corrosion, loose wires, etc. • Install breakout box, leave PCM disconnected. • Measure resistance between test pin 37 at the breakout box and TFT sensor ground circuit at the solenoid body connector. • Measure resistance between test pin 91 at the breakout box and TFT sensor ground circuit at the solenoid body connector. • Is each resistance less than 5 ohms?	Yes	Service open in TFT signal or TFT sensor ground harness circuit. Remove breakout box. Reconnect all components. Clear DTCs and rerun self tests.
		No	Reconnect all components. Unable to duplicate or identify fault at this time. Intermittent poor connection or component malfunction (Repair or repalace as necessary).

Pinpoint test BD

CONTINUOUS DTC P0713	**Transaxle fluid temperature (TFT) –40 °C {–40 °F} indicates TFT sensor circuit open**
DESCRIPTION	Diagnostic trouble code (DTC) P0713 indicates a TFT sensor circuit input above the maximum acceptable voltage.
POSSIBLE CAUSE	• Fluid level is not as specification • Damaged TFT sensor • Short to power circuit in TFT signal harness circuit • Damaged PCM

STEP	INSPECTION		ACTION
BD1	**CONTINUOUS MEMORY DTC P0713: VERIFY TFT SIGNAL VOLTAGE** • Key on, engine off. • Access TFT PID with a NGS tester. • Is TFT PID voltage greater than 4.8 volts?	Yes	The TFT signal voltage is greater than the acceptable maximum, but is not intermittent. Go to step BC1
		No	The fault that produced continuous memory DTC P0713 is intermittent. Go to next step.
BD2	**WIGGLE TEST TFT SENSOR HARNESS CIRCUITS** • Key on, engine off. • Access TFT PID with a NGS tester. • Observe TFT PID for an indication of a fault while performing the following: • Shake, wiggle and bend TFT signal and TFT sensor ground circuits between transaxle and PCM. A fault is indicated by a sudden change in TFT PID voltage. • Is a fault indicated?	Yes	Isolate fault and service as necessary. Reconnect all components. Complete PCM. Reset to clear DTCs. Rerun OBD test.
		No	Reconnect all components. Unable to duplicate or identify fault at this time. Intermittent poor connection or component malfunction (Repair or replace as necessary).

Pinpoint test BE

DTC P1711	Automatic transaxle fluid (ATF) is not at operating temperature during self-test
DESCRIPTION	KEY ON ENGINE OFF (KOEO), KEY ON ENGINE RUNNING (KOER) DTC P1711 indicates a transaxle fluid temperature (TFT) sensor circuit input that was out of range.
POSSIBLE CAUSE	• Fluid level is not as specification • Fluid is not at operating temperature • Damaged TFT sensor • Damaged powertrain control module (PCM)

STEP	INSPECTION		ACTION
BE1	**KOEO AND KOER DTC P1711: INCREASE/DECREASE TRANSAXLE FLUID TEMPERATURE** • Connect NGS tester to DLC. • Drive vehicle through normal city traffic to bring the transaxle fluid temperature to at least 10 degrees C (50 degrees F). • Activate KOEO and KOER Self-Tests. • Is DTC P1711 still present?	Yes	Go to next step.
		No	Transaxle fluid was not at operating temperature. Rerun OBD test. Service other DTCs as necessary.
BE2	**CHECK CONSTANT VOLTAGE (VREF) AT THROTTLE POSITION SENSOR** • Key off. • Disconnect throttle position (TP) sensor. • Key on engine off. • Measure voltage between the TP sensor VREF and TP sensor ground circuits at the TP sensor vehicle harness connector. • Is the voltage between 4.0 and 6.0 volts?	Yes	VREF voltage is in range. Reconnect the TP sensor. Go to next step.
		No	VREF voltage is out of range. Go to reference voltage test. ☞ 01–40A POWERTRAIN CONTROL MODULE (PCM) INSPECTION [FS]
BE3	**CHECK TFT SENSOR RESISTANCE AS TRANSAXLE FLUID TEMPERATURE IS VARIED** • Key off. • Disconnect PCM. Inspect for damaged or pushed out pins, corrosion, loose wires, etc. Service as necessary. • Install breakout box, leave PCM disconnected. • Verify that transaxle oil pan is warm to the touch. IF IT IS HOT: • Measure and record TFT sensor resistance between Test Pin 37 and Test Pin 91 at the breakout box. • Let transaxle cool down and repeat the measurement. (The last measurement should be greater than the first.) IF IT IS COLD: • Measure and record TFT sensor resistance between Test Pin 37 and Test Pin 91 at the breakout box. • Reconnect the PCM and drive vehicle for short time to elevate temperature. • Disconnect the PCM and repeat the measurement at the breakout box. (The last measurement should be less than the first.) **Note** • Refer to tables and charts at the beginning of this pinpoint test. • Did resistance measurements differ as expected and was last measurement within specifications?	Yes	Replace damaged PCM. Remove breakout box. Rerun OBD test.
		No	Remove breakout box. Reconnect PCM. Go to next step.

STEP	INSPECTION		ACTION
BE4	**CHECK RESISTANCE OF TFT SENSOR/HARNESS** **Note** • Refer to the transaxle tester for terminal location. • Ensure that the emission harness is disconnected. • Install transaxle tester to solenoid body connector. • Set bench/drive switch to BENCH mode. • Rotate gear slector switch to OHMS check position. • Connect ohmmeter negative lead to –TFT jack and positive lead to +TFT jack of tester. • Perform tests 1 and 2. **Note** • While performing tests 1 and 2 observe resistances. Code P0713 is set if resistance value exceeds 869K ohms (OPEN circuit). Code P0712 is set if resistance value falls below 597 ohms (Short circuit). **TEST 1** • Record resistance. • Resistance should be approximately in the following ranges: **Transaxle fluid temperature** ☞ 05–17A ELECTRICAL SYSTEM COMPONENT [LA4A-EL], Transaxle Tester Instruction, Transaxle fluid temperature (TFT) **TEST 2** • Check for intermittent short or open. • If resistance was between 0.8K and 100K ohms, perform the following test. If transaxle is cold, run transaxle to warm it up. If transaxle is warm, allow transaxle to cool. Check TFT sensor resistance again. Compare resistance with internal resistance. Resistance should decrease if transaxle was warmed and should increase if transaxle was allowed to cool. If correct change in resistance occurs, repeat OBD test. • Is the resistance within range?	Yes	Go to next step
		No	Replace solenoid body component. Record and erase DTCs. Repeat OBD test.
BE5	**CHECK TFT SENSOR FOR SHORT TO GROUND** • Check for continuity between –BAT (engine ground) and appropriate jack (–TFT and +TFT) appropriate wire with ohmmeter or other low current tester (less than 200 milliamps). • Connection should show infinite resistance (no continuity). • Is there continuity?	Yes	Replace solenoid body component. Repeat OBD test.
		No	Replace PCM. Erase DTCs and perform drive cycle test. Rerun OBD Tests. If DTC are present and overtemp condition existed determine. If fluid is burnt, teardown unit and repair as required. Rerun OBD test.

Pinpoint test BF

CONTINUOUS DTC P1783	**Automatic transaxle fluid (ATF) temperature exceeded 132 °C {270 °F}**		
DESCRIPTION	DTC P1783 indicates a transaxle over temperature condition occurred		
POSSIBLE CAUSE	• Damaged transaxle cooling system • Excessive loading, e.g. trailer towing • Damaged clutch • Improper transaxle fluid level • Damaged transaxle connector		
STEP	**INSPECTION**		**ACTION**
BF1	**CONTINUOUS MEMORY DTC P1783: RERUN KEY ON ENGINE OFF (KOEO) SELF-TEST** • Key off. • Connect NGS tester to DLC. • Disconnect transaxle connector. Inspect for damaged or pushed out pins, corrosion, loose wires, etc. Service as necessary and reconnect. • Rerun KOEO self-test and record all DTCs. • Any transaxle related DTCs generated?	Yes	Address any transaxle related diagnostic trouble codes (DTCs) by referring to diagnostic trouble code charts. ☞ 05–01A AUTOMATIC TRANSAXLE ON-BOARD DIAGNOSIS [LA4A-EL], Diagnostic Trouble Code
		No	Refer to Symptom Troubleshooting for over temperature condition (check clutch, transaxle fluid level etc.). ☞ 05–01A AUTOMATIC TRANSAXLE SYMPTOM TROUBLESHOOTING [LA4A-EL]

Pinpoint test C

DTC	**P0741 TCC control engagement error** **P0743 TCC solenoid circuit failure during self-test** **P1742 TCC solenoid failed on (MIL turned on)** **P1743 TCC solenoid failed on (O/D OFF indicator light turned on)** **P1744 TCC system malfunction (stuck off)** **P1767 TCC solenoid circuit failure during self-test**		
DESCRIPTION	This pinpoint test is intended to diagnose the following components: • Transaxle wiring harness, TCC, power circuit • PCM		
POSSIBLE CAUSE	• Engine: Performance, cooling • Electrical: Battery, input sensors, wiring harnesses, brake switch • Transaxle: Internal transaxle components, linkage, cooling		
STEP	**INSPECTION**		**ACTION**
C1	**ELECTRONIC DIAGNOSTICS** • Check the solenoid body connector is fully seated, terminals are fully engaged in the connector and in good condition before proceeding. • Connect NGS tester. • Perform key on engine off (KOEO) test until continuous memory DTC have been displayed. • Enter output test mode. ☞ 01–01A ENGINE ON-BOARD DIAGNOSIS [FS] • Select TCC PID. • Cycle TCC solenoid ON/OFF by selecting ON/OFF mode. • Does TCC PID cycle?	Yes	Go to next step.
		No	If vehicle did not enter output state (Diagnostic test mode (DTM)). ☞ 01–01A ENGINE ON-BOARD DIAGNOSIS [FS]

STEP	INSPECTION		ACTION
C2	**CHECK ELECTRICAL SIGNAL OPERATION** **Caution** • **Removing the solenoid body connector by prying with a screwdriver will damage the connector. Remove the solenoid body connector by pushing on the wire tab and pulling on the wiring harness.** • Disconnect solenoid body connector. • Using a mirror, inspect both ends of the connector for damaged or pushed out pins, corrosion, loose wires, and missing or damaged seals. • Refer to connector schematic and table of solenoid body. ☞ Solenoid Body Connector Component • Connect volt-ohm meter (VOM)/digital volt-ohm meter (DVOM) positive test lead to power circuit and negative test lead to TCC solenoid circuit of the solenoid body connector. (vehicle harness side) • VOM/DVOM on 20 Volt scale. • While observing DVOM, cycle solenoid output ON and OFF. • Does the TCC solenoid output voltage change at least 0.5 volt?	Yes	Go to C5.
		No	Go to next step.
C3	**CHECK CONTINUITY OF SOLENOID SIGNAL AND POWER CIRCUIT HARNESS CIRCUITS** • Key off. • Disconnect solenoid body connector. • Disconnect PCM. Inspect for damaged or pushed out pins, corrosion, loose wires, etc. Service as required. • Install breakout box, leave PCM disconnected. • Refer to connector schematic and table of solenoid body. ☞ Solenoid Body Connector Component • Measure resistance between PCM signal pin 54 at the breakout box and signal test pin at solenoid body connector. • Measure resistance between PCM test pin 71/97 at the breakout box and power circuit pin at solenoid body connector. • Is each resistance less than 5.0 ohms?	Yes	Go to next step.
		No	Service open circuit(s). Remove breakout box. Reconnect all components. Rerun OBD test.
C4	**CHECK SOLENOID HARNESS FOR SHORTS TO POWER AND GROUND** • Key off. • Breakout box installed, PCM disconnected. • Solenoid body connector disconnected. • Refer to connector schematic and table of solenoid body. ☞ Solenoid Body Connector Component • Measure resistance between PCM signal test pin 54 and test pin 71/97 at the breakout box. • Measure resistance between PCM signal test pin 54 and test pins 77/103 and 91 at breakout box and chassis ground. • Is each resistance greater than 10,000 ohms?	Yes	Go to next step.
		No	Service short circuit. Remove breakout box. Reconnect all components. Rerun OBD test.

<table>
<tr><th>STEP</th><th>INSPECTION</th><th></th><th>ACTION</th></tr>
<tr><td rowspan="2">C5</td><td rowspan="2">SOLENOID FUNCTIONAL TEST
• Emission harness disconnected at transaxle.
• Install transaxle tester at the solenoid body connecter.
• Using tests outlined under tester instructions perform the solenoid voltage test.

Note
• LED will turn “GREEN” when solenoid activated and turn “OFF” when deactivated.
• LED will turn “RED” if activated solenoid is shorted to BAT+.
• LED will remain “OFF” if an activated solenoid is shorted to ground or no continuity.

• Does the solenoid activate? (LED GREEN)</td><td>Yes</td><td>Go to next step.</td></tr>
<tr><td>No</td><td>Go to C7.</td></tr>
<tr><td rowspan="2">C6</td><td rowspan="2">TRANSAXLE DRIVE TEST
• Perform the drive cycle test as outlined in transaxle tester manual.
• Does the TCC active when commanded by the tester?
• Does the engine RPM drop?</td><td>Yes</td><td>Replace PCM.
Erase diagnostic trouble codes (DTCs) and perform Drive Mode Test.
Rerun OBD test.
If symptom are still present.
☞ 05–01A AUTOMATIC TRANSAXLE SYMPTOM TROUBLESHOOTING [LA4A-EL], torque converter concern</td></tr>
<tr><td>No</td><td>Go to next step.</td></tr>
<tr><td rowspan="2">C7</td><td rowspan="2">CHECK RESISTANCE OF SOLENOID

Note
• Refer to the transaxle tester for terminal location.

• Set bench/drive switch to bench mode.
• Rotate gear select switch to ohms check position.
• Connect ohmmeter negative lead to TCC jack and positive lead to VPWR jack on tester.
• Record resistance.
• Is resistance between 12.5—19.0 ohms?</td><td>Yes</td><td>Go to next step.</td></tr>
<tr><td>No</td><td>Replace solenoid body component.</td></tr>
<tr><td rowspan="2">C8</td><td rowspan="2">CHECK SOLENOID FOR SHORT TO GROUND
• Check for continuity between BAT– (engine ground) and appropriate jack with and ohmmeter or other low current tester (less than 200 milliamps).
<table><tr><th>Solenoid</th><th>Tester Jack</th></tr><tr><td>TCC</td><td>TCC
VPWR</td></tr></table>W6U501WA1
• Connection should show infinite resistance (no continuity).
• Is there continuity?</td><td>Yes</td><td>Replace solenoid body component.</td></tr>
<tr><td>No</td><td>☞ 05–01A AUTOMATIC TRANSAXLE SYMPTOM TROUBLESHOOTING [LA4A-EL], diagnose torque converter clutch diagnosis</td></tr>
</table>

Pinpoint test D

DTC	**P1705**	**Transaxle range (TR) switch is not in PARK**
	P0707	**TR switch out of range** **Shorted TR switch circuit or TR switch**
	P0708	**TR switch circuit high or open**
DESCRIPTION		This pinpoint test is intended to diagnose the following components: • Transaxle wiring harness, TR switch, TR switch ground circuit • PCM • Starter circuits, backup circuits
POSSIBLE CAUSE		• Engine: Starter, starter relay • Electrical: Battery, ignition switch, wiring harness • Transaxle: Internal transaxle components, linkage

STEP	INSPECTION		ACTION
D1	**TR SWITCH** • Check that the TR switch connector is fully seated, terminals are fully engaged in the connector and in good condition before preceeding. • Verify shift linkage adjustment in D range. • Key off. • Apply parking brake. • Place transaxle in N position. • Verify that TR switch alignment tool or equivalent fits in the appropriate slots. • Is TR switch properly adjusted?	Yes	Remove tools. Go to next step.
		No	Adjust TR switch as outlined under transaxle component. After adjustments place selector lever in P position. Erase DTC and rerun OBD test.
D2	**CHECK ELECTRICAL SIGNAL OPERATION** **Caution** • **Do not attempt to pry on TR switch connector. This will damage the connector and could result in a transaxle concern. Press button and pull up on the transaxle connector. (vehicle harness side)** • Disconnect TR switch connector. • Using a mirror, inspect both end of the connector for damaged or pushed out pins, corrosion, loose wires and missing or damaged seals. • Refer to connector schematic of TR switch. ☞ TR switch connector component • Connect a volt-ohm meter (VOM) positive test lead to TR signal circuit and negative test lead to the signal return (SIG RTN) of TR switch connector. (vehicle harness side) • Place VOM on 20 volt scale. • Key on engine off. • Is voltage between 4.75 and 5.25 volts?	Yes	Go to next step.
		No	Go to ENGINE SYMPTOM TROUBLESHOOTING No.31.
D3	**CHECK CONTINUITY OF TR SWITCH HARNESS CIRCUITS** • Key off. **Caution** • **Do not attempt to pry on TR switch connector. This will damage the connector and could result in a transaxle concern. Press button and pull up on the transaxle connector. (vehicle harness side)** • Disconnect TR switch connector. • Inspect for damaged or pushed out pins, corrosion, loose wires, etc. • Disconnect PCM. Inspect for damaged or pushed out pins, corrosion, loose wires, etc. service as required. • Install breakout box, leave PCM disconnected. • Refer to connector of TR switch. ☞ TR Switch Connector Component • Measure resistance between PCM test pin 91 at the breakout box and the signal return circuits at the TR switch connector • Measure resistance between PCM test pin 64 at the breakout box and TR signal circuit at the TR switch connector • Is each resistance less than 5.0 ohms?	Yes	Go to next step.
		No	Service open circuit(s). Remove breakout box. Reconnect all components. Erase DTCs. Rerun OBD tests.

<table>
<tr><th>STEP</th><th>INSPECTION</th><th></th><th>ACTION</th></tr>
<tr><td rowspan="2">D4</td><td rowspan="2">CHECK TR SWITCH CIRCUIT FOR SHORTS TO POWER AND GROUND
• Breakout box installed, PCM disconnected.
• TR switch connector disconnected.
• Refer to connector of TR switch.
☞ TR Switch Connector Component
• Measure resistance between PCM test pin 64 and PCM test pins 71, 97, 24, 51, 77, 103 and 91 at the breakout box.
• Measure resistance between PCM test pin 64 at the breakout box and chassis ground.
• Is each resistance greater than 10,000 ohms?</td><td>Yes</td><td>Go to next step.</td></tr>
<tr><td>No</td><td>Service short circuit.
Remove breakout box.
Reconnect all components.
Erase DTCs.
Rerun OBD test.</td></tr>
<tr><td rowspan="2">D5</td><td rowspan="2">CHECK TR SWITCH RESISTANCE
• Disconnect TR switch connector.
• Connect MLP-D harness adapter to TR switch and transaxle tester.
• Install MLP-D overlay onto transaxle tester.
• Use the procedures outlined in the tester manual to measure the resistance between TR and SRTN of the TR switch, verify the switch resistance value in all gear positions.
☞ 05–17A ELECTRICAL SYSTEM COMPONENTS [LA4A-EL], MLP Tester Instruction, TR switch resistance tests.
• Are the resistive value within specifications?</td><td>Yes</td><td>Replace PCM.
Erase DTCs.
Rerun OBD tests, then go to next step.</td></tr>
<tr><td>No</td><td>Replace TR switch and adjust.
Erase DTCs and rerun OBD test.</td></tr>
<tr><td rowspan="2">D6</td><td rowspan="2">CHECK PARK/NEUTRAL CIRCUITS OF TR SWITCH
• Using the procedures outlined in the tester manual, check the park/neutral circuits of TR switch in all gear positions.
• Monitor the status light on the tester for proper indications.
<table><tr><th colspan="3">Park/neutral circuit</th></tr><tr><th>Terminal</th><th>Selector lever position</th><th>A good switch will indicate</th></tr><tr><td rowspan="6">64 and 91</td><td>P</td><td>Less than 5 ohms</td></tr><tr><td>R</td><td>Greater than 100K ohms</td></tr><tr><td>N</td><td>Less than 5 ohms</td></tr><tr><td>D</td><td>Greater than 100K ohms</td></tr><tr><td>2</td><td>Greater than 100K ohms</td></tr><tr><td>1</td><td>Greater than 100K ohms</td></tr></table>W6U501WA2
• Do the park/neutral circuits operate properly and only in the proper gear position?</td><td>Yes</td><td>Service as required.
Go to next step.</td></tr>
<tr><td>No</td><td>Replace TR switch and adjust.
Erase DTCs and rerun OBD test.</td></tr>
</table>

<table>
<tr><th>STEP</th><th>INSPECTION</th><th></th><th>ACTION</th></tr>
<tr><td>D7</td><td>CHECK REVERSE/BACK-UP LIGHT CIRCUIT OF TR SWITCH
• Using the procedures outlined in the tester manual, check the reverse/back-up light circuits of TR switch in all gear positions.
• Monitor the status light on the tester for proper indications.
<table><tr><th colspan="3">Reverse/back-up light circuit</th></tr><tr><th>Terminal</th><th>Selector lever position/ range</th><th>A good switch will indicate</th></tr><tr><td rowspan="6">92 and 91</td><td>P</td><td>Greater than 100K ohms</td></tr><tr><td>R</td><td>Less than 5 ohms</td></tr><tr><td>N</td><td>Greater than 100K ohms</td></tr><tr><td>D</td><td>Greater than 100K ohms</td></tr><tr><td>2</td><td>Greater than 100K ohms</td></tr><tr><td>1</td><td>Greater than 100K ohms</td></tr></table>W6U501WA3
• Do the reverse/back-up circuits operate properly and only in the proper gear positions?</td><td>Yes</td><td>Service as required.</td></tr>
<tr><td></td><td></td><td>No</td><td>Replace TR switch and adjust.
Erase DTCs and rerun OBD test.</td></tr>
</table>

Pinpoint test DA

<table>
<tr><td colspan="2">KOEO, KOER
DTC P1702</td><td>TR switch intermittent</td></tr>
<tr><td colspan="2">DESCRIPTION</td><td>• DTC P1702 is not received during KOEO and KOER self-test but are output during Continuous Memory self-test and may be intermittent</td></tr>
<tr><td colspan="2">POSSIBLE CAUSE</td><td>• Damaged TR switch
• Damaged harness
• Damaged harness connector
• Damaged PCM</td></tr>
<tr><th>STEP</th><th>INSPECTION</th><th>ACTION</th></tr>
<tr><td rowspan="2">DA1</td><td rowspan="2">• Key off.
• Breakout box connected.
• Key on.
• Inspect the voltage at the TR switch.
  • Tap on sensor to simulate road shock
  • Wiggle sensor connector
• Is terminal voltage okay?</td><td>Yes</td><td>Go to next step.</td></tr>
<tr><td>No</td><td>DISCONNECT and INSPECT connectors.
If okay, REPLACE sensor.
RESET PCM to completely clear DTC.
☞ After Repair Procedure
RERUN OBD Test.</td></tr>
</table>

STEP	INSPECTION		ACTION
DA2	**CHECK CONTINUITY OF TR SWITCH HARNESS CIRCUITS** • Key off. **Caution** • **Do not attempt to pry on TR switch connector. This will damage the connector and could result in a transaxle concern. Press button and pull up on the transaxle connector. (vehicle harness side)** • Disconnect TR switch connector. • Inspect for damaged or pushed out pins, corrosion, loose wires, etc. • Disconnect PCM. Inspect for damaged or pushed out pins, corrosion, loose wires, etc. service as required. • Install breakout box, leave PCM disconnected. • Refer to connector of TR switch. ☞ TR Switch Connector Component • Hold the vehicle harness close to the sensor connector. Wiggle, shake and bend small section of wiring harness while working toward PCM. • Measure resistance between PCM test pin 91 at the breakout box and the SIG RTN circuit at the TR switch connector • Measure resistance between PCM test pin 64 at the breakout box and TR signal circuit at the TR switch connector • Is each resistance less than 5.0 ohms?	Yes	Service as required.
		No	Repair or replace, harness and/or connector.

Pinpoint test E

DTC	P1747 P1746	**Electronic pressure control (EPC) solenoid circuit failure, shorted to ground or open** **Open powertrain control module (PCM) output driver**
DESCRIPTION		This Pinpoint Test is intended to diagnose the following components: • Transaxle Wiring Harness, EPC, EPC power circuit • PCM
POSSIBLE CAUSE		• Engine: Performance • Electrical: Battery, input sensors, wiring harness • Transaxle: Internal transaxle components, cooling

STEP	INSPECTION		ACTION
E1	**ELECTRONIC DIAGNOSTICS** • Check the solenoid body connector is fully seated, terminals are fully engaged in the connector and in good condition before preceeding. • Connect NGS tester. • Perform key on engine off (KOEO) test until continuous memory DTC have been displayed. • Enter output test mode EPC V. ☞ 01–01A ENGINE ON-BOARD DIAGNOSIS [FS] • Select EPC V PID • Cycle EPC solenoid 0—8 V/12 V by selecting STOP/START mode • Does EPC V PID cycle?	Yes	Go to E2.
		No	If vehicle did not enter output state (Diagnostic test mode (DTM)). ☞ 01–01A ENGINE ON-BOARD DIAGNOSIS [FS]

STEP	INSPECTION		ACTION
E2	**CHECK ELECTRICAL SIGNAL OPERATION** **Caution** • **Removing the solenoid body connector by prying with a screwdriver will damage the connector. Remove the solenoid body connector by pushing on the wire tab and pulling on the wiring harness.** • Disconnect solenoid body connector. • Using a mirror, inspect both ends of the connector for damaged or pushed out pins, corrosion, loose wires, and missing or damaged seals. • Refer to connector schematic and table of solenoid body. ☞ Solenoid Body Connector Compoent • Connect volt-ohm meter (VOM)/digital volt-ohm meter (DVOM) positive test lead to power circuit and negative test lead to the EPC solenoid circuit of the transaxle vehicle harness connector. • VOM/DVOM ON 20 Volt scale. • While observing DVOM, cycle solenoid output ON and OFF. • Does the EPC solenoid output voltage change at least 0.5 volt?	Yes	Go to E5.
		No	Go to next step.
E3	**CHECK CONTINUITY OF SOLENOID SIGNAL AND POWER CIRCUIT HARNESS CIRCUIT** • Key off. • Disconnect PCM. Inspect for damaged or pushed out pins, corrosion, loose wires, etc. • Install breakout box, leave PCM disconnected. • Refer to connector schematic and table of the solenoid body. ☞ Solenoid Body Connector Component • Measure resistance between PCM test pin (71/97) at breakout box and EPC power circuit at the solenoid body connector. • Measure resistance between PCM test pin 81 at the breakout box and EPC solenoid signal pin at the solenoid body connector. • Is each resistance less than 5.0 ohms?	Yes	Go to next step.
		No	Service open circuit. Remove breakout box. Reconnect all components. Erase diagnostic trouble codes (DTCs) and rerun OBD test.
E4	**CHECK HARNESS FOR SHORT TO POWER OR GROUND** • Key off. • Breakout box installed, PCM disconnected. • Solenoid body connector disconnected. • Refer to connector schematic and table of the solenoid body. ☞ Solenoid Body Connector Component • Measure resistance between EPC solenoid circuit test pin 81 and test pin 71/97 at the breakout box. • Measure resistance between EPC solenoid circuit test pin 81 and test pins 77/103, 91 at the breakout box. • Is each resistance greater than 10,000 ohms?	Yes	Go to next step.
		No	Service short circuit. Remove breakout box. Reconnect all components. Erase DTCs and rerun OBD test.

STEP	INSPECTION		ACTION
E5	**TRANSAXLE FUNCTIONAL TEST** • Solenoid body connector disconnected. • Install transaxle tester. • Set bench/drive switch to drive mode. • Rotate gear selector switch to first gear position. • Using tests outlined in the manual perform the EPC function test. • Observe line pressure on the gauge while depressing the EPC switch. (VEHICLE MUST BE RUNNING) • Does the EPC (LED GREEN) activate and line pressure drop when the EPC switch is depressed?	Yes	Replace PCM. Rerun OBD test.
		No	Go to next step.
E6	**CHECK RESISTANCE OF SOLENOID** **Note** • Be sure that tester power is OFF or damage to ohmmeter may result. • Connect ohmmeter negative lead to VPWR jack and positive lead to EPC jack on tester. This is to test EPC solenoid. • Record resistance. • Is the resistance between 3.75—5.92 ohms?	Yes	Go to next step.
		No	Replace solenoid body component. Record and erase DTCs. Rerun OBD test.
E7	**CHECK SOLENOID FOR SHORT TO GROUND** • Check for continuity between BAT– (engine ground) and appropriate jack with an ohmmeter or other low current tester (less than 200 milliamps). Solenoid: EPC — Tester Jack: EPC, VPWR W6U501WA4 • Connection should show infinite resistance (no continuity). • Is there continuity?	Yes	Replace solenoid body component. Record and erase DTCs. Rerun OBD test.
		No	Refer to QUICK DIAGNOSIS CHART to diagnose EPC concerns under engagement and/or Shift diagnosis. ☞ 05–01A AUTOMATIC TRANSAXLE BASIC INSPECTION [LA4A-EL], Quick Diagnosis Chart

Pinpoint test F

DTC P0715	**Insufficient input from turbine shaft speed (TSS) sensor**
DESCRIPTION	This Pinpoint Test is intended to diagnose the following components: • Transaxle Wiring Harness, TSS, TSS ground circuit • PCM
POSSIBLE CAUSE	• Electrical: Battery, Input sensors, Wiring harness • Transaxle: Internal transaxle components

STEP	INSPECTION		ACTION
F1	**ELECTRONIC DIAGNOSTICS** • Check the turbine shaft speed sensor (TSS) connector is fully seated, terminal are fully engaged in the connector and in good condition before proceeding. • Have the items above been checked?	Yes	Go to next step.
		No	Perform the checks. Erase diagnostic trouble codes (DTCs) and rerun OBD test.

STEP	INSPECTION		ACTION
F2	**CHECK CONTINUITY OF TSS HARNESS CIRCUIT** • Key off. **Caution** • **Do not pry on connector. Pull up on harness.** • Disconnect TSS connector. • Disconnect PCM. Inspect for damaged or pushed out pins, corrosion, loose wires, etc. • Install breakout box, leave PCM disconnected. • Refer to connector schematic of TSS. ☞ TSS Switch Connector Component • Measure resistance between PCM test pin 84 at the breakout box and the TSS (+) circuit at the TSS connector. • Measure resistance between PCM test pin 91 at the breakout box and the TSS (–) circuit at the TSS connector and chassis/battery ground. • Is each resistance less than 5.0 ohms?	Yes	Go to next step.
		No	Service open circuit. Remove breakout box. Reconnect all components. Rerun OBD test.
F3	**CHECK TSS CIRCUIT FOR SHORT TO POWER AND GROUND** • Key off. • Disconnect TSS connector. • Breakout box installed, PCM disconnected. • Measure resistance between PCM test pins 84, 91 and test pins 71/97 at breakout box. • Measure resistance between PCM test pins 84, 91, 71/97 and test pins 77/103 at breakout box. • Is each resistance greater than 10,000 ohms?	Yes	Go to next step.
		No	Service short circuit. Remove breakout box. Reconnect all components. Rerun OBD test.
F4	**TSS FUNCTIONAL TEST** **Caution** • **Do not pry on connector. Pull up on harness.** • Disconnect vehicle harness at TSS. • Install transaxle tester on to TSS. • Connect voltmeter positive lead to (+) TSS and negative lead to (–) TSS jacks. Set voltmeter to 20 volts AC. • Perform drive cycle test. Monitor voltmeter. • Does the voltage increase with an increase in vehicle speed?	Yes	Replace PCM.
		No	Go to next step.
F5	**CHECK RESISTANCE OF TSS** **Note** • Refer to the LA4A-EL Transaxle tester for terminal locations. • Connect ohmmeter negative lead to +TSS jack and positive lead to –TSS jack on tester. This is to test TSS. • Record resistance. • Is the resistance between 140—290 ohms?	Yes	Go to next step.
		No	Replace TSS. Rerun TSS functional test.

STEP	INSPECTION		ACTION
F6	**CHECK SENSOR FOR SHORT TO GROUND** • Check for continuity between BAT– (engine ground) and appropriate jack with an ohmmeter or other low current tester (less than 200 milliamps). Solenoid: TSS — Tester Jack: +TSS, –TSS W6U501WA5 • Connection should show infinite resistance (no continuity). • Is there continuity?	Yes	Replace TSS. Rerun function test.
		No	Go to next step.
F7	**CHECK TSS MAGNETISM** • Remove TSS from transaxle. • Place TSS against a metal surface to which a magnet would stick. The TSS should be magnetized and stick to the metal surface. • Does the TSS stick?	Yes	Go to next step.
		No	Replace TSS. Rerun functional test.
F8	**CHECK EXCITER WHEEL** • Remove TSS. • With a remote starter, start and stop until a tooth of the exciter wheel is visible through the TSS hole. Continue until all 4 teeth have been visibly inspected. • Were all teeth present?	Yes	Replace TSS. Rerun functional test.
		No	Service or replace as required. Then rerun function test.

Pinpoint test FA

KOEO, KOER DTC P1701	**Turbine shaft speed (TSS) sensor intermittent**
DESCRIPTION	• DTC P1701 is not received during KOEO and KOER self-test but are output during Continuous Memory self-test and may be intermittent
POSSIBLE CAUSE	• Damaged TSS sensor • Damaged harness • Damaged harness connector • Damaged PCM

STEP	INSPECTION		ACTION

FA1	**CHECK TSS/ISS OUTPUT WITH NGS TESTER**
	• Key off.
	• NGS tester connected.
	• Key on.
	• Monitor TSS/ISS PID.
	• While observing PID, perform the following:
	  • Tap on sensor to simulate road shock
	  • Wiggle sensor connector
	• Is there any change in rpm reading?
		Yes	DISCONNECT and INSPECT connectors.
			If okay, REPLACE sensor.
			RESET PCM to completely clear DTC.
			RERUN OBD Test.

		No	Go to next step.
FA2	**CHECK PCM VEHICLE HARNESS** • Still monitoring PID. • While observing appropriate PID, perform the following: • Hold the vehicle harness close to the sensor connector. Wiggle, shake and bend small section of wiring harness while working toward PCM. • Is there any change in rpm reading?	Yes	ISOLATE fault. SERVICE as necessary. RESET PCM to completely clear DTC. RERUN OBD Test.
		No	Service or replace as required. Then rerun function test.

Pinpoint test G

DTC P1788	**3–2 timing/coasting clutch solenoid (3–2T/CCS) circuit open or powertrain control module (PCM) drive circuit failure during self-test**
DTC P1789	**3–2T/CCS circuit shorted during self-test**
DESCRIPTION	This pinpoint test is intended to diagnose the following components: • Transaxle wiring harness, 3–2T/CCS, POWER GROUND • PCM
POSSIBLE CAUSE	• Engine: Performance • Electrical: Battery, Input sensors, Wiring harness • Transaxle: Internal transaxle components

STEP	INSPECTION		ACTION
G1	**TRANSAXLE FUNCTIONAL TEST** • Solenoid body connector disconnected. • Install Transaxle tester. • Set Bench/Drive switch to drive mode. • Rotate gear selector switch to first gear position. • Does the 3–2T/CCS (LED GREEN) deactivate when the 3–2T/CCS switch is depressed? • When the 3–2T/CCS switch is released does engine braking occur and the 3–2T/CCS engage (LED OFF)?	Yes	Go to step G4.
		No	Go to next step.
G2	**CHECK RESISTANCE OF SOLENOID** **Note** • Be sure that tester power is OFF or damage to ohmmeter may result. • Connect ohmmeter negative lead to VPWR jack and positive lead to 3–2T/CCS jack on tester. This is to test 3–2T/CCS solenoid. • Record resistance. • Is the resistance between 3.75—5.92 ohms?	Yes	Go to next step.
		No	Replace solenoid body component. Record and erase diagnostic trouble codes (DTCs). Rerun OBD test.
G3	**CHECK SOLENOID FOR SHORT TO GROUND** • Check for continuity between BAT– (engine ground) and appropriate jack with an ohmmeter or other low current tester (less than 200 milliamps). Solenoid: 3–2T/CCS — Tester Jack: 3–2T/CCS VPWR W6U501WA6 • Connection should show infinite resistance (no continuity). • Is there continuity?	Yes	Replace solenoid body component. Record and erase DTCs. Rerun OBD test.
		No	Refer to QUICK DIAGNOSIS CHART to diagnose. 3–2T/CCS concerns under shift diagnosis. ☞ 05–01A AUTOMATIC TRANSAXLE BASIC INSPECTION [LA4A-EL], Quick diagnosis chart
G4	**CHECK CONTINUITY OF SOLENOID SIGNAL AND POWER CIRCUIT HARNESS CIRCUIT** • Key off. • Disconnect PCM. Inspect for damaged or pushed out pins, corrosion, loose wires, etc. • Install breakout box, leave PCM disconnected. • Refer to connector schematic and table of solenoid body. ☞ Solenoid Body Connector Component • Measure resistance between PCM test pin 71/97 at breakout box and solenoid power circuit at the solenoid body connector. • Measure resistance between PCM test pin 102 at the breakout box and 3–2T/CCS solenoid signal pin at the solenoid body connector. • Is each resistance less than 5.0 ohms?	Yes	Go to next step.
		No	Service open circuit. Remove breakout box. Reconnect all components. Erase DTCs and rerun OBD test.

STEP	INSPECTION		ACTION
G5	**CHECK HARNESS FOR SHORT TO POWER OR GROUND** • Key off. • Breakout box installed, PCM disconnected. **Caution** • **Removing the solenoid body connector by prying with a screwdriver will damage the connector. Remove the solenoid body connector by pushing on the wire tab and pulling on the wiring harness.** • Solenoid body connector disconnected. • Refer to connector schematic and table of solenoid body. ☞ Solenoid Body Connector Component • Measure resistance between 3–2T/CCS solenoid circuit test pin 102 and test pin 71/97 at the breakout box. • Measure resistance between 3–2T/CCS solenoid circuit test pin 102 and test pins 77/103, 91 at the breakout box. • Is each resistance greater than 10,000 ohms?	Yes	Inspect PCM power relay, service as required. If okay, replace PCM. Rerun OBD test.
		No	Service short circuit. Remove breakout box. Reconnect all componets. Rerun OBD test.

Pinpoint test TB

DTC P1780	O/D OFF switch not cycled during self-test
DESCRIPTION	This Pinpoint test is intended to diagnose the following components: • Transaxle wiring harness, O/D OFF switch, O/D OFF indicator light • PCM
POSSIBLE CAUSE	• Electrical: Battery, input sensors, wiring harness • Transaxle: Linkages

STEP	INSPECTION		ACTION
TB1	**DIAGNOSTIC TROUBLE CODE P1780** • Diagnostic trouble code (DTC) P1780 indicates the O/D OFF switch was not cycled during key on engine running (KOER) Self-Test. Possible cause: • O/D OFF switch damaged or switch not cycled during self-test • Shorted harness • Damaged PCM Did O/D OFF switch cycled during KOER self-test?	Yes	Go to next step.
		No	Return KOER Self-Test to cycle O/D OFF switch.
TB2	**CHECK O/D OFF SWITCH CIRCUIT FOR VOLTAGE** • Key off. • Disconnect PCM. Inspect for damaged or pushed out pins, corrosion, loose wires, etc. Service as necessary. • Install breakeout box, leave PCM disconnected. • Key on engine off. • Measure voltage between test pin 29 and test pins 24/77 at the breakout box while cycling the O/D OFF switch several times Does the voltage cycle?	Yes	Replace PCM. Remove breakout box. Rerun OBD test.
		No	Go to next step.

STEP	INSPECTION		ACTION
TB3	**CHECK HARNESS CIRCUIT(S) FOR SHORT TO GROUND** • Key off. • Breakout box installed, PCM disconnected. • Disconnect O/D OFF switch. Inspect both ends of the connector for damaged or pushed out pins, moisture, corrosion, loose wires, etc. Service as necessary • Measure resistance between test pin 29 and test pins 24/77 at the breakout box. Is the resistance greater than 10,000 ohms?	Yes	Go to next step.
		No	Service short circuit. Rerun KOER self-test.
TB4	**CHECK CONTINUITY OF O/D OFF SWITCH HARNESS** • Key off. • Breakout box connected, PCM disconnected. • Measure the resistance between keypower at the fuse panel and power side of O/D OFF switch vehicle harness connector (ohmmeter negative probe). • Measure resistance between test pin 29 and signal side of O/D OFF switch vehicle harness connector. Is resistance less than 5.0 ohms?	Yes	Go to next step.
		No	Service open circuit. Remove breakout box. Reconnect all components. Rerun OBD test.
TB5	**CHECK HARNESS CIRCUIT FOR SHORT TO POWER** • Key off. • Breakout box installed, PCM disconnected. • Measure resistance between test pin 29 and test pins 71/97 at the breakout box. Is each resistance greater than 10,000 ohms?	Yes	Replace damaged switch. Remove breakout box. Reconnect all components. Rerun OBD test.
		No	Service short circuit. Remove breakout box. Reconnect all components. Rerun OBD test.
TB6	**O/D OFF INDICATOR LIGHT ALWAYS ON** • Key on engine off. • Cycle O/D OFF switch. Does O/D OFF indicator light turn on and off?	Yes	Reconnect all components. Unable to duplicate or identify fault at this time. Intermittent poor connection or component malfunction (Repair or replace as necessary).
		No	Go to next step.
TB7	**CHECK FOR SHORT TO GROUND IN O/D OFF INDICATOR LIGHT CIRCUIT** • Key off. • Disconnect PCM. Inspect both ends for damaged or pushed out pins, moisture, corrosion, loose wires, etc. Service as necessary. • Key on, engine off. Does O/D OFF indicator light remain on?	Yes	Repair short to ground between bulb and test pin 79. Verify O/D OFF indicator light turns on and off.
		No	O/D OFF indicator light turns off when PCM is disconnected replace PCM.
TB8	**O/D OFF INDICATOR LIGHT NEVER ON** • Run key on engine running (KOER) self-test. • Connect NGS tester to DLC. Is DTC P1780 present?	Yes	Service DTC P1780. Go to TB1.
		No	Go to next step.
TB9	**CHECK CONTINUITY OF O/D OFF INDICATOR LIGHT CIRCUIT** • Key off. • Breakout box installed. • Key on, engine off. • Measure the voltage between test pin 79 and test pins 24/76 at the breakout box. Is the voltage reading greater than 2.0 volts?	Yes	Replace PCM. Cycle (O/D OFF switch) checking operation of O/D OFF indicator light.
		No	Check indicator bulb and fuse. If okay, open is in the wiring between the ignition switch and test pin (79) at the harness connector. Repair as necessary.

Pinpoint test DP

DTC P0500	Insufficient vehicle speedometer sensor (VSS) input
DESCRIPTION	This pinpoint test is intended to diagnose the following components: • Transaxle wiring harness, vehicle speedometer sensor, power circuit • PCM
POSSIBLE CAUSE	• Electrical: Battery, input sensors, Wiring harness • Transaxle: Linkages **Note** • Diagnostic trouble code (DTC) P0500 — go to step DP1

STEP	INSPECTION		ACTION
DP1	**DTC P0500: CHECK CONTINUITY OF VEHICLE SPEEDOMETER SENSOR HARNESS CIRCUIT** DTC P0500 indicates the VSS input signal has been detected out of Self-Test range. **Note** • Delayed engagement or no vehicle movement may be caused by a transaxle concern. Harsh shifts and/or erratic speedometer may be caused by a failed speedometer or an open or intermittent ground within the instrument panel on vehicles with electronic readout. Possible causes: • Open in VSS (+)/VSS (–) harness circuit. • Short to GND or VSS ground circuit in VSS (+)/VSS (–) harness circuit • Short to VSS power circuit in VSS (+)/VSS (–) harness circuit • Damaged VSS • Damaged PCM • Key OFF. • Disconnect PCM. Inspect for damaged or pushed out pins, corrosion, loose wires, etc. Service as necessary. • Install breakout box, PCM disconnected. • Disconnect VSS. • Measure resistance between test pin 58 [VSS (+)] at the breakout box and VSS (+) circuit at the VSS vehicle harness connector. • Measure resistance between test pin 33 [VSS (–)] at the breakout box and VSS (–) circuit at the VSS vehicle harness connector. Is each resistance less than 5.0 ohms?	Yes	Go to next step.
		No	Service open in harness circuit. Remove breakout box. Reconnect all components. Complete PCM. Reset to clear DTCs. Run VSS drive cycle in DP5 to verify repair.
DP2	**CHECK VEHICLE SPEEDOMETER SENSOR HARNESS CIRCUITS FOR SHORTS TO GROUND, VSS GROUND CIRCUIT AND POWER** • Key off. • VSS disconnected. • Breakout box installed, PCM disconnected. • Measure resistance between test pin 58 and test pins 24, 61, 76, 103 (power ground), 33, 91 (VSS ground circuit) and 71 (power ground) at the breakout box. • Measure resistance between test pins 33 and 71 (power ground) at the breakout box. Is each resistance greater than 500 ohms?	Yes	Go to next step.
		No	Service short circuit. Remove the breakout box. Reconnect all components. Complete PCM. Reset to clear DTCs. Run VSS drive cycle in DP5 to verify repair.

STEP	INSPECTION		ACTION
DP3	**CHECK VEHICLE SPEEDOMETER SENSOR RESISTANCE** • Key off. • VSS disconnected. • Measure the resistance of the VSS. Is resistance between 190 and 250 ohms?	Yes	Remove breakout box. Replace the PCM. Reconnect the VSS. Run VSS drive cycle in DP5 to verify repair.
		No	Replace the VSS. Remove breakout box. Reconnect the PCM. Run VSS drive cycle in DP5 to verify repair.
DP4	**VEHICLE SPEEDOMETER SENSOR DRIVE CYCLE TEST** • Warm engine to operating temperature. • Perform the VSS drive cycle at least three times as outlined below: **AUTOMATIC TRANSAXLE:** • Place gear selector in DRIVE range. • Obey all local traffic laws. • Accelerate heavily to 35 mph. • Coast down to an idle and stop the vehicle. • Shut the engine off. • After the drive cycle is completed, retrieve and record any continuous memory DTCs. Address the DTCs in Section 5, powertrain diagnostic trouble code charts. • If no DTCs are generated, testing is complete.	—	—

Solenoid Body Connector Component
Vehicle harness connector pin locations

Pin	Description	PCM Test Pin
1	Transaxle fluid temperature (TFT) signal	37
2	Sensor ground circuit	91
3	TCC power circuit	71, 97
4	TCC signal circuit	54
5	Shift solenoid No.2 (SS2) signal circuit	1
6	Solenoid power circuit	71, 97
7	Shift solenoid No.1 (SS1) signal circuit	27
8	3–2 timing/coasting clutch solenoid (3–2T/CCS) signal circuit	102
9	Electrical pressure control (EPC) power circuit	71, 97
10	Electrical pressure control (ECP) signal circuit	81

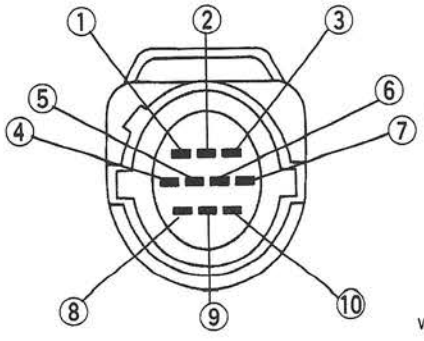

W6U501WA7

Transaxle Range (TR) Switch Connector Component
Vehicle harness connector pin locations

Pin	Circuit Function
1	Main relay
2	Not used
3	Backup Lamp Output
4	Starter
5	Sensor ground circuit
6	NOT USED
7	Not used
8	Not used
9	Ignition switch
10	Transaxle range switch
11	NOT USED

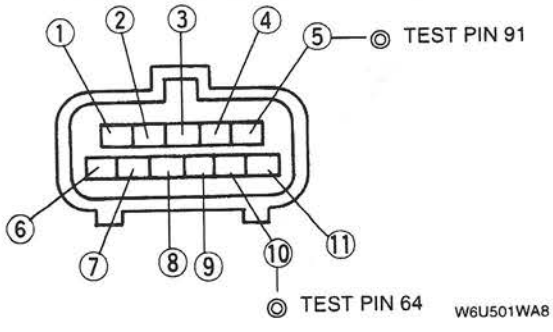

W6U501WA8

Turbine Shaft Speed (TSS) Sensor Connector Component

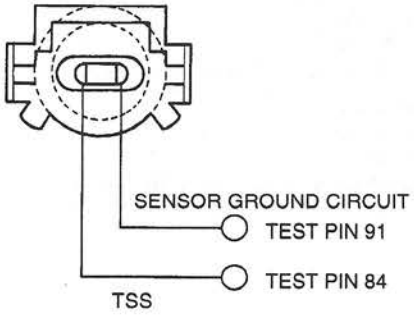

W6U501WA9

AUTOMATIC TRANSAXLE BASIC INSPECTION [LA4A-EL]

W6U501W03

STEP	INSPECTION		ACTION
1	Turn ignition switch to ON. Does O/D OFF indicator light (illuminate/go out) correspond to O/D OFF switch position (ON/OFF)?	Yes	Go to next step.
		No	Perform malfunction diagnosis according to No.39 "O/D OFF INDICATOR LIGHT DOES NOT ILLUMINATE WHEN O/D OFF SWITCH IS TURNED ON", or No.40 "O/D OFF INDICATOR LIGHT ILLUMINATES WHEN O/D OFF SWITCH IS NOT TURNED ON".
2	Check the ATF color and condition. ☞ 05–17A AUTOMATIC TRANSAXLE FLUID (ATF) INSPECTION [LA4A-EL], ATF Condition Inspection Are ATF color and odor normal?	Yes	Go to next step.
		No	Repair or replace any defective parts.
3	Perform the line pressure test. ☞ 05–17A MECHANICAL SYSTEM TEST [LA4A-EL], Line Pressure Test Is line pressure okay?	Yes	Go to next step.
		No	Repair or replace any defective parts.
4	Perform the stall test. ☞ 05–17A MECHANICAL SYSTEM TEST [LA4A-EL], Stall test Is stall speed okay?	Yes	Go to next step.
		No	Repair or replace any defective parts.
5	Check the voltage at the following terminals of powertrain control module. ☞ 01–40A POWERTRAIN CONTROL MODULE (PCM) INSPECTION [FS] • Throttle position sensor signal • Transaxle fluid temperature sensor signal • Speedometer signal Is terminal voltage okay?	Yes	Perform symptom troubleshooting.
		No	Repair or replace nay defective parts.

AUTOMATIC TRANSAXLE SYMPTOM TROUBLESHOOTING [LA4A-EL]

W6U501W12

Diagnosis Index

TROUBLESHOOTING ITEM		
No.	TROUBLE	
1	No forward engagement only	
2	No reverse engagement only (No movement)	
3	Harsh engagement	
4	Delayed/soft engagement	
5	No forward and no reverse engagements (No vehicle movement)	
6	Some or all shift missing	
7	Shift concern	Timing-early/late
8		Erratic
9		Feel-soft/slipping
10		Feel harsh
11		No first gear engages in higher gear ("D" range)
12		No first gear in "1" range (First gear in "D" range okay)
13		No 1–2 shift
14		No 2–3 shift
15		No 3–4 shift
16		Soft/slipping 1–2 shift
17		Soft/slipping 2–3 shift
18		Soft/slipping 3–4 shift
19		Soft/slipping 4–3 shift (Automatic)
20		Soft/slipping 3–2 shift (Automatic)
21		Soft/slipping 2–1 shift (Automatic or kickdown)
22		Harsh 1–2 shift
23		Harsh 2–3 shift
24		Harsh 3–4 shift
25		Harsh 4–3 shift (Automatic)
26		Harsh 3–2 shift (Automatic)
27	Torque converter clutch	No apply
28		Always applied/may stall engine
29	Poor vehicle acceleration/performance	
30	Engine will not crank	
31	No "P" position	
32	Transaxle overheating	
33	No engine braking in first gear ("1" range)	
34	No engine braking in "2" range	
35	Vehicle movement with gear selector in the "N" position	
36	Shift efforts high	
37	External leaks	
38	Noise/vibration—forward/reverse	
39	O/D OFF indicator light does not illuminate when O/D OFF switch is turned to ON	
40	O/D OFF indicator light illuminates when O/D OFF switch is not turned to ON	

Quick Diagnosis Chart (I)

Inspection method	Cause of trouble: Preliminary: ATF level and condition	Selector lever	Stall test	Line pressure test	Road test	Emission control system: Powertrain control module	Fuel injection control system	Mass air flow sensor	Throttle position sensor	Engine coolant temperature sensor	A/C relay	EC-AT control system: Transaxle fluid temperature sensor	Transaxle range switch	Brake switch	Vehicle speedometer sensor	Turbine shaft speed sensor	O/D OFF switch	Shift solenoid No.1	Shift solenoid No.2	Electronic pressure control solenoid	Torque converter clutch solenoid	3–2 timing/coasting clutch solenoid	Hydraulic control system: Oil pump	Control valve body	Thermostatic oil level control valve	Torque converter	Oil filter and seal	Oil cooler	Chain pan
Stall test												○	○										○	○		○			
Line pressure test																				○			○	○					
Road test					○			○	○	○	○	○	○	○	○	○	○	○	○	○	○	○							
Diagnostic trouble code						○	○	○	○	○		○	○	○	○	○	○	○	○	○	○	○							

W6U501WAA

Quick Diagnosis Chart (I) (Cont'd)

Inspection method	Cause of trouble: Powertrain: Forward clutch	Coasting clutch	Direct clutch	Reverse clutch	2/4 band and servo	Low/reverse clutch	Chain and sprocket	Forward/coasting/direct clutch cylinder	Reverse/fourth (REV/4GR) carrier component	REV/4GR sun gear and shell	Forward one-way clutch	Low one-way clutch	Converter one-way clutch	Low-intermediate carrier component	Planetaly gearsets (Differential)	Parking mechanism	Turbine shaft	Final drive and differential	Exterla: Transaxle case	Converter housing	Other: Joint shaft	Engine mount	Drive plate	Tire size
Stall test	○	○		○	○	○																		
Line pressure test	○		○	○	○	○																		
Road test	○	○	○		○	○					○		○			○								○
Diagnostic trouble code																								

W6U501WAB

Quick Diagnosis Chart (II)

| Symptom | | | Cause of trouble | | |

Quick Diagnosis Chart (II) (Cont'd)

	Symptom		Cause of trouble: Powertrain: Forward clutch	Coasting clutch	Direct clutch	Reverse clutch	2/4 band and servo	Low/reverse clutch	Chain and sprocket	Forward/coasting/direct clutch cylinder	Reverse/fourth (REV/4GR) carrier component	REV/4GR sun gear and shell	Forward one-way clutch	Low one-way clutch	Converter one-way clutch	Low-intermediate carrier component	Planetaly gearsets differential	Parking mechanism	Turbine shaft	Final drive and differential	Extension: Transaxle case	Converter housing	Other: Joint shaft	Engine mount	Drive plate	Tire size
1	No forward engagement only		○	○									○			○										
2	No reverse engagement					○		○		○	○										○					
3	Harsh engagement		○		○	○		○															○	○		
4	Delayed/soft engagement		○			○		○		○																
5	No forward and no reverse engagements								○								○	○	○	○			○			
6	Some or all shift missing																									
7	Shift concern	Timing-early/late																								○
8		Erratic																								
9		Feel-soft/slipping																								
10		Feel harsh																					○	○		
11		No first gear engages in higher gear ("D" range)			○		○																			
12		No first gear in "1" range (First gear in "D" range okay)																								
13		No 1–2 shift					○					○		○							○					
14		No 2–3 shift			○		○														○					
15		No 3–4 shift		○			○						○								○					
16		Soft/slipping 1–2 shift	○				○	○					○	○							○					
17		Soft/slipping 2–3 shift			○		○						○								○					
18		Soft/slipping 3–4 shift			○																○					
19		Soft/slipping 4–3 shift (Automatic)	○	○	○		○														○					
20		Soft/slipping 3–2 shift (Automatic)			○		○														○					
21		Soft/slipping 2–1 shift (Automatic or kickdown)	○				○								○											
22		Harsh 1–2 shift	○				○														○					
23		Harsh 2–3 shift			○		○														○					
24		Harsh 3–4 shift		○	○		○														○					
25		Harsh 4–3 shift (Automatic)		○			○														○					
26		Harsh 3–2 shift (Automatic)			○		○														○					
27	Torque converter clutch	No apply																								
28		Always applied/may stall engine																			○					
29	Poor vehicle acceleration/performance														○											
30	Engine will not crank																									
31	No "P" position																	○								
32	Transaxle overheating																				○	○				
33	No engine braking in first gear ("1" range)		○				○																			
34	No engine braking in "2" range		○										○													
35	Vehicle movement with gear selector in the "N" position	○	○																							
36	Shift efforts high																	○								
37	External leaks																									
38	Noise/vibration—forward/reverse								○				○				○			○			○	○	○	
39	O/D OFF indicator light does not illuminate when O/D OFF switch is turned to ON																									
40	O/D OFF indicaotr light illuminates when O/D OFF switch is not turned to ON																									

W6U501WAD

Symptom Troubleshooting

1	NO FORWARD ENGAGEMENT ONLY		
[TROUBLESHOOTING HINTS] • Internal or external shift linkages • Oil pump • Control valve body • Forward clutch and coasting clutch component • Low one way clutch component • Forward one way clutch component • Low intermediate carrier component			
STEP	**INSPECTION**		**ACTION**
1	**Internal or external shift linkages** • Do any of the following problems exist? • Damaged • Misadjusted • Misassembled ☞ 05–18 SELECTOR LEVER REMOVAL/INSTALLATION	Yes	Service as required
		No	Go to next step
2	**Control valve body** • Do any of the following problems exist? • Bolts are not torqued to specification • Gaskets are damaged, or leaking • Pressure tap plate/Gasket are leaking or damaged • Separator plates are damaged • Hydraulic passages are damaged • Main regulator valve is stuck, damaged, or misassembled • Forward accumulator is leaking	Yes	Service as required
		No	Go to next step
3	**Oil pump** • Do any of the following problems exist? • Bolts are not torqued to spec • Gaskets are damaged • Porosity/cross leaks and/or ball plug is missing, or leaking, or a plugged hole • Pump support seal rings, #3 and #4 are damaged	Yes	Service as required
		No	Go to next step
4	**Forward clutch and coasting clutch component** • Do any of the following problems exist? • Seals or pistons damaged • Return spring is damaged • Ball check valve are damaged • Friction elements are severely damaged or worn • Forward/coasting/direct (F/C/D) clutch cylinder are damaged, leaking, misassembled, or binding • Welding between cylinder and Hub is broken, or splines are damaged	Yes	Service as required
		No	Go to next step
5	**Low one way clutch component** • Do any of the following problems exist? • Worn • Damaged • Misassembled	Yes	Service as required
		No	Go to next step
6	**Forward one way clutch component** • Do any of the following problems exist? • Worn • Damaged • Misassembled	Yes	Service as required
		No	Go to next step
7	**Low intermediate carrier** • Do any of the following problems exist? • Damaged • Misassembled	Yes	Service as required
		No	The problem is fixed

2	NO REVERSE ENGAGEMENT (NO MOVEMENT)		
[TROUBLESHOOTING HINTS] • Powertrain control system • Improper pressures • Internal or external shift linkages • Control valve body • Oil pump • Reverse clutch component • Low/reverse clutch component • Forward/coasting/direct (F/C/D) clutch cylinder component • Transaxle case • Reverse/fourth gear (REV/4GR) carrier component			
STEP	**INSPECTION**		**ACTION**
1	**Powertrain control system** • Are there any problems with the following? • Electrical input/output • Vehicle wiring harness • PCM • Shift solenoid No.1 (SS1) (ON) • Transaxle range (TR) switch ☞ 05–01A ELECTRICAL SYSTEM COMPONENTS [LA4A-EL]	Yes	Run OBD tests Perform pinpoint tests "A and D" ☞ 05–01 AUTOMATIC TRANSAXLE ON-BOARD DIAGNOSIS [LA4A-EL], Pinpoint Test
		No	Go to next step
2	**Improper pressures** • Is there low line pressure? ☞ 05–01A MECHANICAL SYSTEM TEST [LA4A-EL], Line Pressure Test	Yes	Check the following possible components Control valve body, oil pump, reverse clutch component, Low/reverse clutch component
		No	Go to next step
3	**Internal or external shift linkages** • Do any of the following problems exist? • Damaged • Misadjusted ☞ 05–18 SELECTOR LEVER REMOVAL/INSTALLATION	Yes	Service as required
		No	Go to step 9
4	**Control valve body** • Do any of the following problems exist? • Bolts are not torqued to specification • Gasket is damaged • 1–2 shift valve, SS1, main regulator valve, low/reverse modulator valve, low/reverse accumulator piston, pressure tap plate are damaged, missing, stuck, or misassembled • Separator plates are damaged • Hydraulic passages are damaged	Yes	Service as required
		No	Go to next step
5	**Oil pump** • Do any of the following problems exist? • Bolts are not torqued to specification • Gasket is damaged • Porosity/cross leaks/ball plug are missing or leaking, or plugged hole • Pump support seal rings, #6 and #7, are damaged	Yes	Service as required
		No	Go to next step
6	**Reverse clutch component** • Do any of the following problems exist? • Seals-piston are damaged • Ball check valve are damaged • Friction elements worn, are severely damaged, or misassembled • Piston return spring damaged • Reverse clutch hub to F/C/D clutch hub splines are damaged	Yes	Service as required
		No	Go to next step
7	**Low/reverse clutch component** • Do any of the following problems exist? • Seals or piston are damaged • Friction elements are worn, or severely damaged • Piston return spring is damaged • Wave spring is missing • Piston bore is damaged	Yes	Service as required
		No	Go to step 3
8	**Forward/coasting/direct clutch cylinder** • Are any of the reverse seal rings damaged, missing, or misassembled?	Yes	Service as required
		No	Go to next step

STEP	INSPECTION		ACTION
9	**Reverse/fourth (REV/4GR) carrier component** • Is there any damage?	Yes	Service as required
		No	Go to next step
10	**Transaxle case** • Is there any severe cross leakage from the reverse clutch to low/reverse clutch feeds?	Yes	Service as required
		No	The problem is fixed

3	HARSH ENGAGEMENT

[TROUBLESHOOTING HINTS]
- ATF
- Powertrain control system
- Improper pressure
- Control valve body
- Oil filter and seal
- Internal and external linkages
- Joint shafts
- Engine mounts
- Forward clutch component (Forward only)
- Reverse clutch component (Reverse only)
- Low/reverse clutch component (Reverse only)
- Direct clutch component (Reverse only)

STEP	INSPECTION		ACTION
1	**ATF** • Are there any problems with the following? • Level • Condition ☞ 05–17A AUTOMATIC TRANSAXLE FLUID (ATF) INSPECTION [LA4A-EL]	Yes	Service as required
		No	Go to next step
2	**Powertrain control system** • Are there any problems with the following? • Electrical input/output • Vehicle wiring harness • PCM • Electrical pressure control (EPC) solenoid • Transaxle fluid temperature (TFT) sensor • 3–2 timing/coasting clutch solenoid (3–2 T/CCS) (Harsh forward only) ☞ 05–17A ELECTRICAL SYSTEM COMPONENTS [LA4A-EL]	Yes	Run OBD test Perform pinpoint tests "BA, BB, BC, BD, BE, BF and E" ☞ 05–01A AUTOMATIC TRANSAXLE ON-BOARD DIAGNOSIS [LA4A-EL], Pinpoint Test
		No	Go to next step
3	**Improper pressure** • Is line pressure higher than normal? ☞ 05–17A MECHANICAL SYSTEM TEST [LA4A-EL], Line Pressure Test	Yes	Verify engagements at minimum EPC using the transaxle tester If line remains high, check the following components: control valve body, oil filter and seal component
		No	Go to next step
4	**Control valve body** • Do any of the following problems exist? • Bolts are not torqued to specification • Gaskets are damaged • Low/reverse accumulator piston and spring (Reverse), main regulator valve, coast clutch valve (Forward) are damaged, missing stuck, or misassembled • Accumulator piston and spring are misassembled, stuck, or damaged • EPC solenoid is stuck, or damaged	Yes	Service as required
		No	Go to next step
5	**Oil Filter and seal component** • Do any of the following problems exist? • Filter/seal are damaged, or plugged • Recirculation seal is damaged, plugged, or out of position	Yes	Replace as required
		No	Go to next step
6	**Internal or external shift linkages** • Do any of the following problems exist? • Damaged • Misadjusted ☞ 05–18 SELECTOR LEVER REMOVAL/INSTALLATION	Yes	Service as required
		No	Go to next step
7	**Joint shafts** • Is there spline damage? ☞ 05–17A AUTOMATIC TRANSAXLE REMOVAL/INSTALLATION [LA4A-EL]	Yes	Service as required
		No	Go to next step

STEP	INSPECTION		ACTION
8	**Engine mounts** • Do any of the following problems exist? • Loose, broken, missing or misaligned • Powertrain is contacting with other vehicle components ☞ 05–17A AUTOMATIC TRANSAXLE REMOVAL/INSTALLATION [LA4A-EL]	Yes	Service as required
		No	Go to next step
9	**F/C/D clutch component (Forward only)** • Do any of the following problems exist? • Forward/coasting/direct (F/C/D) clutch cylinder are damaged • Piston bore is damaged • Friction elements are damaged worn • Forward clutch return spring are damaged, or missing • Ball check is damaged • Piston or seals are damaged	Yes	Service as required
		No	Go to next step
10	**Reverse clutch component (Reverse only)** • Do any of the following problems exist? • Seals or piston are damaged • Reverse piston is damaged • Friction elements are damaged, worn, or misassembled • Return spring component is damaged, or worn • Ball check is damaged, or missing	Yes	Service as required
		No	Go to next step
11	**Low/reverse clutch component (Reverse only)** • Do any of the following problems exist? • Seals or piston are damaged • Wave spring is damaged • Friction elements are damaged, worn, misassembled • Return spring component is damaged, worn, or misassembled • Piston bore is damaged	Yes	Service as required
		No	Go to next step
12	**Direct clutch component (Reverse only)** • Are any of the friction elements severely damaged?	Yes	Service as required
		No	The problem is fixed

4	DELAYED/SOFT ENGAGEMENT

[TROUBLESHOOTING HINTS]

- ATF
- Improper pressure
- Internal or external shift linkages
- Control valve body
- Oil filter and seal component
- Oil pump
- Forward clutch component
- Reverse clutch component
- Low/reverse clutch component
- Forward/coasting/direct (F/C/D) clutch cylinder component

STEP	INSPECTION		ACTION
1	**ATF** • Are there any problems with the following? • Level • Condition ☞ 05–17A AUTOMATIC TRANSAXLE FLUID (ATF) INSPECTION [LA4A-EL]	Yes	Service as required
		No	Go to next step
2	**Improper pressure** • Is line pressure lower than normal? ☞ 05–17A MECHANICAL SYSTEM TEST [LA4A-EL], Line Pressure Test	Yes	Check the following possible components; control valve body, oil pump, oil filter and seal component, recirculating seal, clutch assemblies
		No	Go to next step

STEP	INSPECTION		ACTION
3	**Internal or external shift linkages** • Do any of the following problems exist? • Damaged • Misadjusted • Misassembled ☞ 05–18 SELECTOR LEVER REMOVAL/INSTALLATION	Yes	Service as required
		No	The problem is fixed
4	**Control valve body** • Do any of the following problems exist? • Bolts are not torqued to specification • Gaskets are damaged • Manual valve, main regulator valve, low/reverse modulator regulator valve stuck, are damaged, or misassembled • Separator plates are damaged • Pressure tap plate/gasket leaks, are damaged, or misassembled	Yes	Service as required
		No	Go to next step
5	**Oil filter and seal component** • Do any of the following problems exist? • Filter/seal is damaged, or plugged • Recirculating Seal is damaged, or out of position	Yes	Service as required
		No	Go to next step
6	**Oil pump** • Do any of the following problems exist? • Bolts are not torqued to specification • Gaskets are damaged • Porosity/cross leaks/ball plug are missing or leaking, or passage blockage • Pump support seal rings, #3 and #4 (Forward), or #6 and #7 (Reverse), are damaged • Pump gear/pocket is damaged • Separator plate is damaged	Yes	Service as required
		No	Go to next step
7	**Forward clutch component (Forward only)** • Do any of the following problems exist? • Seals or piston are damaged • Ball check are damaged, missing, or not seating properly • Friction elements are damaged, worn, or excessive end clearance	Yes	Service as required
		No	Go to next step
8	**Reverse clutch component (Reverse only)** • Do any of the following problems exist? • Seals or piston are damaged • Check ball is damaged • Friction elements are damaged, worn • Return spring is worn, or damaged • Piston bore is damaged • Excessive clutch pack end clearance	Yes	Service as required
		No	Go to next step
9	**Low/reverse clutch component (Reverse only)** • Do any of the following problems exist? • Piston or seals are damaged • Friction elements are damaged, or worn • Return spring is damaged • Piston bore is damaged • Excessive clutch pack end clearance	Yes	Service as required
		No	Go to next step
10	**Forward/coasting/direct (F/C/D) clutch cylinder component** • Do any of the following problems exist? • Reverse Seal Ring is damaged, or missing • Cylinder is damaged, or leaking	Yes	Service as required
		No	Go to step 3

5	NO FORWARD AND NO REVERSE ENGAGEMENTS (NO VEHICLE MOVEMENT)		
[TROUBLESHOOTING HINTS] • ATF • Improper pressure • Internal or external linkages • Control valve body • Oil filter and seal component • Oil pump • Drive plate • Turbine shaft to forward/coasting/direct (F/C/D) clutch cylinder • Torque converter • Chain and sprocket component • Park mechanism • Joint shafts • Final drive and differential component • Planetary gearsets (Differential)			
STEP	**INSPECTION**		**ACTION**
1	**ATF** • Are there any problems with the following? • Level • Condition ☞ 05–17A AUTOMATIC TRANSAXLE FLUID (ATF) INSPECTION [LA4A-EL]	Yes	Service as required
		No	Go to next step
2	**Improper pressures** • Do any of the following problems exist? • Low line pressure • No line pressure ☞ 05–17A MECHANICAL SYSTEM TEST [LA4A-EL], Line Pressure Test	Yes	If pressure is low, check the following possible components: Control valve body, oil filter and seal component, oil pump Go to step 4 If okay, proceed to turbine shaft Check torque converter pump shaft and component Go to step 7
		No	Go to next step
3	**Internal or external shift linkages** • Do any of the following problems exist? • Damaged • Misadjusted • Misassembled ☞ 05–18 SELECTOR LEVER REMOVAL/INSTALLATION	Yes	Service as required
		No	Go to step 10
4	**Control valve body** • Do any of the following problems exist? • Bolts are not torqued to specification • Gaskets are damaged • Pressure plate/gasket are damaged, or missing • Main regulator valve, manual valve stuck, are damaged, plugged, or missing, "Z" Link is not connected	Yes	Service as required
		No	Go to next step
5	**Oil filter and seal component** • Do any of the following problems exist? • Filter/seal is damaged, plugged, or missing • Recirculating seal is damaged, or out of position	Yes	Service as required
		No	Go to next step
6	**Oil pump** • Do any of the following problems exist? • Bolts are not torqued to spec. • Gasket is damaged, missing • Porosity/cross leaks, or passage(s) are blocked • Pump support seal rings are missing • Oil pump shaft is broken, or damaged	Yes	Service as required
		No	Go to step 3
7	**Drive plate** • Do any of the following problems exist? • Damaged • Broken ☞ 05–17A AUTOMATIC TRANSAXLE DRIVE PLATE REMOVAL/INSTALLATION [LA4A-EL]	Yes	Service as required
		No	Go to next step
8	**Turbine shaft to forward/coasting/direct clutch cylinder housing** • Is there splines damaged?	Yes	Service as required
		No	Go to next step

STEP	INSPECTION		ACTION
9	**Torque converter component** • Do any of the following problems exist? • Oil pump shaft Insert is damaged • Studs are broken, or damaged • Splines are damaged • Internal blades are damaged, or broken	Yes	Service as required
		No	Go to step 3
10	**Chain and sprocket component** • Do any of the following problems exist? • Broken • Damaged	Yes	Service as required
		No	Go to next step
11	**Park mechanism** • Are any of the parking pawl return spring damaged, missing, or misassembled?	Yes	Service as required
		No	Go to next step
12	**Joint shaft** • Do any of the following problems exist? • Broken • Splines damaged ☞ 05–17A AUTOMATIC TRANSAXLE REMOVAL/INSTALLATION [LA4A-EL]	Yes	Service as required
		No	Go to next step
13	**Final drive and differential component** • Do any of the following problems exist? • Splines are damaged • Gearset is damaged	Yes	Service as required
		No	Go to next step
14	**Planetary gearsets (differential)** • Are there any problems with the following? • Gear Teeth • Carriers • Splines	Yes	Service as required
		No	The problem is fixed

6	SOME OR ALL SHIFTS MISSING		
[TROUBLESHOOTING HINTS] • ATF • Powertrain control system • Internal and external shift linkages • Speed input			
STEP	**INSPECTION**		**ACTION**
1	**ATF** • Is there improper level? ☞ 05–17A AUTOMATIC TRANSAXLE FLUID (ATF) INSPECTION [LA4A-EL], ATF Level Inspection	Yes	Adjust fluid to proper level
		No	Go to next step
2	**Powertrain control system** • Are there any problems with the following? • Electrical input/output • Vehicle wiring harness • PCM • Shift solenoids • Transaxle range (TR) switch • Throttle position (TP) sensor • Vehicle speedometer sensor (VSS) • O/D OFF switch ☞ 05–17A ELECTRICAL SYSTEM COMPONENT [LA4A-EL]	Yes	Run OBD test Perform pinpoint tests "A and D" ☞ 05–01A AUTOMATIC TRANSAXLE ON-BOARD DIAGNOSIS [LA4A-EL], Pinpoint Test
		No	Go to next step
3	**Internal and external shift linkages** • Do any of the following problems exist? • Damaged • Misadjusted • Misassembled ☞ 05–18 SELECTOR LEVER REMOVAL/INSTALLATION	Yes	Service as required
		No	Go to next step

STEP	INSPECTION		ACTION
4	**Speed input** • Is the vehicle speedometer sensor drive gear damaged?	Yes	Service as required
		No	For further diagnosis, refer to the appropriate shift routine(s): Shift / No shift 1–2 / 13 2–3 / 14 3–4 / 15 W6U501WAE

7	SHIFT CONCERN: TIMING — EARLY/LATE		
[TROUBLESHOOTING HINTS] • Powertrain control system • Tire size • Speed input			
STEP	**INSPECTION**		**ACTION**
1	**Powertrain control system** • Are there any problems with the following? • Electrical input/output • Vehicle wiring harness • PCM • Throttle position (TP) sensor • Vehicle speedometer sensor (VSS) • Transaxle fluid temperature (TFT) sensor ☞ 05–17A MECHANICAL SYSTEM TEST [LA4A-EL], Line Pressure Test	Yes	Run OBD test Perform Pinpoint Test "BA, BB, BC, BD, BE, BF" ☞ 05–01A AUTOMATIC TRANSAXLE ON-BOARD DIAGNOSIS [LA4A-EL], Pinpoint Test
		No	Go to next step
2	**Possible components** • Do any of the following problems exist? • Tire size change • Vehicle speedometer sensor drive gear is damaged	Yes	Service as required
		No	The problem is not in the automatic transaxle Go to engine symptom troubleshooting ☞ 01–01A ENGINE SYMPTOM TROUBLESHOOTING [FS]

8	SHIFT CONCERN: ERRATIC		
[TROUBLESHOOTING HINTS] • ATF • Powertrain control system • Vehicle speed input • Control valve body			
STEP	**INSPECTION**		**ACTION**
1	**ATF** • Are there any problems with the followings? • Level • Condition ☞ 05–17A AUTOMATIC TRANSAXLE FLUID (ATF) INSPECTION [LA4A-EL]	Yes	Service as required
		No	Go to next step
2	**Powertrain control system** • Are there any problems with the following? • Electrical input/output • Vehicle wiring harness • PCM • Shift solenoid No.1 (SS1), Shift solenoid No.2 (SS2) • Transaxle range (TR) switch • Brake switch • TCC solenoid • Vehicle speedometer sensor (VSS) • Throttle position (TP) sensor • Turbine shaft speed (TSS) sensor • Electrical pressure control (EPC) solenoid • 3–2 timing/coasting clutch solenoid (3–2T/CCS) ☞ 05–17A ELECTRICAL SYSTEM COMPONENT [LA4A-EL]	Yes	Run OBD tests Perform pinpoint test "A, C, D, F and G" ☞ 05–01A AUTOMATIC TRANSAXLE ON-BOARD DIAGNOSIS [LA4A-EL], Pinpoint Test
		No	Go to next step

STEP	INSPECTION		ACTION
3	**Vehicle speed input** • Is the vehicle speedometer sensor drive gear damaged?	Yes	Service as required
		No	Go to next step
4	**Control valve body** • Do any of the following problems exist? • Bolts are not torqued to specification • Gaskets are damaged • 3–2 timing valve, 2–4 accumulator valve, servo release shuttle valve, 3–2 control valve are stuck, damaged, or misassembled • Solenoid screen is blocked • Separator plates are damaged, blocked • Pressure tap plate/gasket are damaged • Shift solenoid No.1 (SS1), Shift solenoid No.2 (SS2), 3–2 timing/coasting clutch solenoid (3–2T/CCS) solenoid malfunction are stuck, or damaged	Yes	Service as required
		No	Refer to the appropriate shift for further diagnosis

Shift	No shift	Soft/slip	Harsh
1–2	13	16	22
2–3	14	17	23
3–4	15	18	24
4–3	—	19	25
3–2	—	20	26
2–1	—	21	—

W6U501WAF

9	SHIFT CONCERN: FEEL — SOFT/SLIPPING

[TROUBLESHOOTING HINTS]
- ATF
- Powertrain control system
- Internal or external shift linkages
- Improper pressure
- Control valve body
- Oil pump
- Oil filter and seal component

STEP	INSPECTION		ACTION
1	**ATF** • Are there any problems with the following? • Level • Condition ☞ 05–17A AUTOMATIC TRANSAXLE FLUID (ATF) INSPECTION [LA4A-EL]	Yes	Service as required
		No	Go to next step
2	**Powertrain control system** • Are there any problems with the following? • Electrical input/output • Vehicle wiring harness • PCM • Electrical pressure control (EPC) solenoid • Transaxle fluid temperature (TFT) sensor • Throttle position (TP) sensor • Mass air flow (MAF) sensor ☞ 05–17A ELECTRICAL SYSTEM COMPONENT [LA4A-EL]	Yes	Run OBD Tests, Perform Pinpoint Tests "BA, BB, BC, BD, BE, BF and E" ☞ 05–01A AUTOMATIC TRANSALXE ON-BOARD DIAGNOSIS [LA4A-EL], Pinpoint Test
		No	Go to next step
3	**Internal external shift linkage** • Do any of the following problems exist? • Damaged • Misadjusted • Misassembled ☞ 05–18 SELECTOR LEVER REMOVAL/INSTALLATION	Yes	Service as required
		No	Go to next step

<table>
<tr><th>STEP</th><th>INSPECTION</th><th></th><th>ACTION</th></tr>
<tr><td>4</td><td>Improper pressure
• Is there low line pressure?
☞ 05–17A MECHANICAL SYSTEM TEST [LA4A-EL], Line Pressure Test</td><td>Yes</td><td>Check the line pressure
If pressures are low or all shifts are soft/slipping, go to step 6
If pressures are okay and a specific shift is soft/slipping, refer to the following chart:
<table><tr><th>Shift</th><th>No shift</th></tr><tr><td>1–2</td><td>16</td></tr><tr><td>2–3</td><td>17</td></tr><tr><td>3–4</td><td>18</td></tr><tr><td>4–3</td><td>19</td></tr><tr><td>3–2</td><td>20</td></tr><tr><td>2–1</td><td>21</td></tr></table>W6U501WAG</td></tr>
<tr><td></td><td></td><td>No</td><td>Go to next step</td></tr>
<tr><td>5</td><td>Control valve body
• Do any of the following problems exist?
• Bolts are not torqued to specification
• Gaskets are damaged
• Main regulator valve, line modulator valve are stuck, damaged, or misassembled, or springs are missing, tangled or damaged
• Electrical pressure control (EPC) solenoid is stuck or damaged
• Separator plates are damaged, or blocked
• Pressure tap plate/gasket are damaged, or missing</td><td>Yes</td><td>Service as required</td></tr>
<tr><td></td><td></td><td>No</td><td>Go to next step</td></tr>
<tr><td>6</td><td>Oil pump
• Do any of the following problems exist?
• Bolts are not torqued to specification
• Gaskets are damaged
• Porosity/cross leaks</td><td>Yes</td><td>Service as required</td></tr>
<tr><td></td><td></td><td>No</td><td>Go to next step</td></tr>
<tr><td>7</td><td>Oil filter and seal component
• Do any of the following problems exist?
• Filter/seal is damaged, plugged, or missing
• Recirculating seal is damaged, or out of position</td><td>Yes</td><td>Service as required</td></tr>
<tr><td></td><td></td><td>No</td><td>The problem is not in the automatic transaxle
Go to engine symptom troubleshooting
☞ 01–01A ENGINE SYMPTOM TROUBLESHOOTING [FS]</td></tr>
</table>

10	SHIFT CONCERN: FEEL — HARSH		
[TROUBLESHOOTING HINTS] • ATF • Powertrain control system • Joint shafts • Engine mounts			• Improper pressure • Control valve body • Torque converter component
STEP	**INSPECTION**		**ACTION**
1	**ATF** • Are there any problems with the following? • Level • Condition ☞ 05–17A AUTOMATIC TRANSAXLE FLUID (ATF) INSPECTION [LA4A-EL]	Yes	Service as required
		No	Go to next step

<table>
<tr><th>STEP</th><th>INSPECTION</th><th></th><th>ACTION</th></tr>
<tr><td rowspan="2">2</td><td rowspan="2">Powertrain control system
• Are there any problems with the following?
• Electrical input/output
• Vehicle wiring harness
• PCM
• Electrical pressure control (EPC) solenoid
• Transaxle fluid temperature (TFT) sensor
• Turbine shaft speed (TSS) sensor
• Throttle position (TP) sensor
• Vehicle speedometer sensor (VSS)
• Mass air flow (MAF) sensor
• TCC solenoid
• Transaxle range (TR) switch
• 3–2 timing/coasting clutch solenoid (3–2T/CCS)
☞ 05–17A ELECTRICAL SYSTEM COMPONENT [LA4A-EL]</td><td>Yes</td><td>Run OBD Tests
Perform pinpoint tests “BA, BB, BC, BD, BE, BF, C, D, E, F and G”
☞ 05–01A AUTOMATIC TRANSAXLE ON-BOARD DIAGNOSIS [LA4A-EL], Pinpoint Test</td></tr>
<tr><td>No</td><td>Go to next step</td></tr>
<tr><td rowspan="2">3</td><td rowspan="2">Joint shafts
• Do any of the following problems exist?
• Damaged
• Loose
• Splines damaged
☞ 05–17A AUTOMATIC TRANSAXLE REMOVAL/INSTALLATION [LA4A-EL]</td><td>Yes</td><td>Service as required</td></tr>
<tr><td>No</td><td>Go to next step</td></tr>
<tr><td rowspan="2">4</td><td rowspan="2">Engine mounts
• Do any of the following problems exist?
• Damaged
• Loose
• Missing
☞ 05–17A AUTOMATIC TRANSAXLE REMOVAL/INSTALLATION [LA4A-EL]</td><td>Yes</td><td>Service as required</td></tr>
<tr><td>No</td><td>Go to next step</td></tr>
<tr><td rowspan="2">5</td><td rowspan="2">Improper pressure
• Is there high line pressure?
☞ 05–17A MECHANICAL SYSTEM TEST [LA4A-EL], Line Pressure Test</td><td>Yes</td><td>Check the line pressure
Service as required
If pressures are okay and a specific shift is harsh, refer to the following chart:
<table><tr><th>Shift</th><th>Harsh</th></tr><tr><td>1–2</td><td>22</td></tr><tr><td>2–3</td><td>23</td></tr><tr><td>3–4</td><td>24</td></tr><tr><td>4–3</td><td>25</td></tr><tr><td>3–2</td><td>26</td></tr><tr><td>2–1</td><td>—</td></tr></table>W6U501WAH</td></tr>
<tr><td>No</td><td>Go to next step</td></tr>
<tr><td rowspan="2">6</td><td rowspan="2">Control valve body
• Do any of the following problems exist?
• Bolts are not torqued to specification
• Gaskets are damaged
• Main regulator valve, by-pass valve, line modulator valve are stuck, damaged, or misassembled springs are tangled, missing, or damaged
• Electrical pressure control (EPC) solenoid is stuck or damaged
• Hydraulic passages are damaged
• Separator plate is damaged or blocked</td><td>Yes</td><td>Service as required</td></tr>
<tr><td>No</td><td>Go to next step</td></tr>
</table>

STEP	INSPECTION		ACTION
7	**Torque converter component** **Note** • TCC applied during shifts • Do any of the following problems exist? • Piston is damaged • Pump support seal #1 (CBY) is leaking, missing or damaged • Case leakage • Converter component is damaged	Yes	Service as required If heat stained, replace converter
		No	The problem is not in the automatic transaxle Go to engine symptom troubleshooting ☞ 01–01A ENGINE SYMPTOM TROUBLESHOOTING [FS]

11	SHIFT CONCERNS: NO FIRST GEAR ENGAGES IN HIGHER GEAR ("D" RANGE)		
[TROUBLESHOOTING HINTS] • Powertrain control system • Internal or external shift linkage • Control valve body • Seals • Direct clutch • 2/4 band and servo			
STEP	**INSPECTION**		**ACTION**
1	**Powertrain control system** • Are there any problems with the following? • Electrical input/output • Vehicle wiring harness • PCM • Shift solenoid No.1 (SS1), Shift solenoid No.2 (SS2) • Transaxle range (TR) switch • O/D OFF switch ☞ 05–17A ELECTRICAL SYSTEM COMPONENT [LA4A-EL]	Yes	Run OBD test Perform Pinpoint tests "A and D" ☞ 05–01A AUTOMATIC TRANSAXLE ON-BOARD DIAGNOSIS [LA4A-EL], Pinpoint Test
		No	Go to next step
2	**Internal or external shift linkages** • Do any of the following problems exist? • Damaged • Misadjusted • Misassembled ☞ 05–18 SELECTOR LEVER REMOVAL/INSTALLATION	Yes	Service as required After servicing linkage, verify that the TR switch is properly adjusted ☞ 05–17A ELECTRICAL SYSTEM COMPONENT [LA4A-EL]
		No	Go to next step
3	**Control valve body** • Do any of the following problems exist? • Bolts are not torqued to specification • Gaskets are damaged • Solenoid regulator valve, shift valves are stuck, damaged, or misassembled • Solenoid filter gasket is damaged, or misassembled • Hydraulic passages are damaged • SS1, SS2 solenoid malfunction	Yes	Service as required
		No	Go to next step
4	**Mechanical** • Do any of the following problems exist? • Seals, clutches are damaged, or worn • Direct clutch, 2/4 band, 2/4 servo are damaged, stuck on	Yes	Service as required
		No	Refer to the appropriate shift for further diagnosis Shift / No shift 1–2 / 13 2–3 / 14 3–4 / 15 W6U501WAJ

12	SHIFT CONCERNS: NO FIRST GEAR IN "1" RANGE (FIRST GEAR IN "D" RANGE OKAY)		
[TROUBLESHOOTING HINTS] • Powertrain control system • Internal or external shift linkages • Control valve body			
STEP	**INSPECTION**		**ACTION**
1	**Powertrain control system** • Are there any problems with the following? • Electrical input/output • Vehicle wiring harness • PCM • Shift solenoid No.1 (SS1), Shift solenoid No.2 (SS2) • Transaxle range (TR) switch ☞ 05–17A ELECTRICAL SYSTEM COMPONENT [LA4A-EL]	Yes	Run OBD test Perform pinpoint tests "A and D" ☞ 05–01A AUTOMATIC TRANSAXLE ON-BOARD DIAGNOSIS [LA4A-EL]
		No	Go to next step
2	**Internal or external shift linkage** • Do any of the following problems exist? • Damaged • Misadjusted • Misassembled ☞ 05–18 SELECTOR LEVER REMOVAL/INSTALLATION	Yes	Service as required After servicing linkage, verify that the TR switch is properly adjusted ☞ 05–17A ELECTRICAL SYSTEM COMPONENT [LA4A-EL]
		No	Go to next step
3	**Control valve body** • Do any of the following problems exist? • Bolts are not torqued to specification • Gaskets are damaged • Shift solenoid No.2 (SS2) is stuck "ON" • Hydraulic passages are damaged • Separator plates are damaged, or blocked	Yes	Service as required
		No	The problem is not in the automatic transaxle Go to engine symptom troubleshooting ☞ 01–01A ENGINE SYMPTOM TROUBLESHOOTING [FS]

13	SHIFT CONCERNS: NO 1–2 SHIFT		
[TROUBLESHOOTING HINTS] • Powertrain control system • Improper pressure • Control valve body • 2/4 band and servo • Low OWC component • Reverse/fourth gear (REV/4GR) sun gear and shell • Transaxle case			
STEP	**INSPECTION**		**ACTION**
1	**Powertrain control system** • Do any of the following problems exist? • Electrical input/output • Vehicle wiring harness • PCM • Shift solenoid No.1 (SS1), Shift solenoid No.2 (SS2) • Transaxle range (TR) switch ☞ 05–17A ELECTRICAL SYSTEM COMPONENT [LA4A-EL]	Yes	Run OBD test Perform pinpoint tests "A and D" ☞ 05–01A AUTOMATIC TRANSAXLE ON-BOARD DIAGNOSIS [LA4A-EL], Pinpoint Test
		No	Go to next step
2	**Improper pressure** • Do any of the following problems exist? • High line pressure • Low line pressure ☞ 05–17A MECHANICAL SYSTEM TEST [LA4A-EL], Line Pressure Test	Yes	Go to next step
		No	Go to step 4
3	**Control valve body** • Do any of the following problems exist? • Bolts are not torqued to specification • Gaskets are damaged • 1–2 shift valve, 2/4 accumulator, main regulator valve are stuck, damaged, or misassembled • SS1, SS2 malfunction • Pressure tap plate/gasket are damaged • Separator plates are damaged • Hydraulic passages are damaged	Yes	Service as required
		No	Go to next step
4	**2/4 band and servo component** **Note** • Also no fourth gear • Do any of the following problems exist? • Seals are damaged, or missing • Piston is damaged • Band is damaged, worn • Springs are damaged • Servo rod or rod bore is damaged	Yes	Service as required
		No	Go to next step
5	**Low OWC component** • Is there damaged?	Yes	Service as required
		No	Go to next step
6	**Reverse/fourth gear sun gear and shell** • Do any of the following problems exist? • Damaged, or weld broken • Lugs are damaged	Yes	Service as required
		No	Go to next step
7	**Transaxle case** • Do any of the following problem exist? • Band anchor area is damaged • Porosity/leakage in servo apply, servo release circuits	Yes	Service or replace case as required
		No	The problem is not in the automatic transaxle Go to engine symptom troubleshooting ☞ 01–01A ENGINE SYMPTOM TROUBLESHOOTING [FS]

14	SHIFT CONCERNS: NO 2–3 SHIFT		
[TROUBLESHOOTING HINTS] • Powertrain control system • Improper pressure • Control valve body • Oil pump • Direct clutch component • 2/4 servo • Transaxle case			
STEP	**INSPECTION**		**ACTION**
1	**Powertrain control system** • Do any of the following problems exist? • Electrical input/output • Vehicle wiring harness • PCM • Shift solenoid No.1 (SS1), Shift solenoid No.2 (SS2) • Transaxle range (TR) switch ☞ 05–17A ELECTRICAL SYSTEM COMPONENT [LA4A-EL]	Yes	Run OBD test Perform pinpoint tests "A and D" ☞ 05–01A AUTOMATIC TRANSAXLE ON-BOARD DIAGNOSIS [LA4A-EL], Pinpoint Test
		No	Go to next step
2	**Improper pressure** • Do any of the following problems exist? • High line pressure • Low line pressure ☞ 05–17A MECHANICAL SYSTEM TEST [LA4A-EL], Line Pressur Test	Yes	Go to next step
		No	Go to step 5
3	**Control valve body** • Do any of the following problems exist? • Bolts are not torque to specification • Gasket leaks • 2–3 shift valve (also no fourth), main regulator valve are stuck, damaged, or misassembled • SS1, SS2 malfunction (also no fourth) • Separator plates are damaged • Pressure tap plate/gasket leaks • Hydraulic passages are damaged	Yes	Service as required
		No	Go to next step
4	**Oil pump** • Do any of the following problems exist? • Bolts are not torqued to spec • Gaskets are damaged • Porosity/cross leaks • Pump support seal rings, #4 and #5, are damaged	Yes	Service as required
		No	Go to next step
5	**Direct clutch component** • Do any of the following problems exist? • Seals or piston is damaged • Piston bore is damaged • Friction is severely damaged, worn • Ball check is not seating properly • Return spring component is damaged • Cylinder bore/splines is damaged • Shell/hub are damaged	Yes	Service as required
		No	Go to next step
6	**2/4 servo** • Do any of the following problems exist? • Piston or piston bore is damaged • Rod bore or rod is damaged, or leaking	Yes	Service as required
		No	Go to next step
7	**Transaxle case** • Do any of the following problems exist? • Leakage in the servo apply, servo release or direct clutch circuits	Yes	Service or replace case as required
		No	The problem is not in the automatic transaxle Go to engine symptom troubleshooting ☞ 01–01A ENGINE SYMPTOM TROUBLESHOOTING [FS]

15	SHIFT CONCERNS: NO 3–4 SHIFT		
[TROUBLESHOOTING HINTS] • Powertrain control system • Improper pressures • Control valve body • 2/4 band and servo component • Coasting clutch component • Forward OWC component • Transaxle case			
STEP	**INSPECTION**		**ACTION**
1	**Powertrain control system** • Do any of the following problems exist? • Electrical input/output • Vehicle wiring harness • PCM • Shift solenoid No.1 (SS1), Shift solenoid No.2 (SS2) • Transaxle range (TR) switch ☞ 05–17A ELECTRICAL SYSTEM COMPONENT [LA4A-EL]	Yes	Run OBD test Perform pinpoint tests "A and D" ☞ 05–01A AUTOMATIC TRANSAXLE ON-BOARD DIAGNOSIS [LA4A-EL], Pinpoint Test
		No	Go to next step
2	**Improper pressure** • Do any of the following problems exist? • High line pressure • Low line pressure ☞ 05–17A MECHANICAL SYSTEM TEST [LA4A-EL], Line Pressure Test	Yes	Go to next step
		No	Go to step 4
3	**Control valve body** • Do any of the following problems exist? • Bolts are not torqued to specification • Gasket leaks • 3–4 Shift Valve, main regulator valve are stuck, damaged, or misassembled • SS1, SS2 malfunction (Also no first gear) • Separator plates are damaged, or orifice is blocked	Yes	Service as required
		No	Go to next step
4	**2/4 band and servo component** **Note** • Also no second gear • Do any of the following problems exist? • 2/4 band is damaged, worn • Servo rod or rod bore is damaged • Servo piston or cover is damaged, or leaking • Springs are damaged	Yes	Service as required
		No	Go to next step
5	**Coasting clutch component** • Do any of the following problems exist? • Seals are damaged, or missing • Piston is damaged • Friction is severely damaged, worn • Check ball is severely damaged	Yes	Service as required
		No	Go to next step
6	**Forward OWC component** • Is there damage?	Yes	Service as required
		No	Go to next step
7	**Transaxle case** **Note** • Also no second gear • Do any of the following problems exist? • Band anchor is damaged • Leakage in the servo apply and servo release	Yes	Service as required
		No	Go to next step

16	SHIFT CONCERNS: SOFT/SLIPPING 1–2 SHIFT		
[TROUBLESHOOTING HINTS] • Powertrain control system • Control valve body • 2/4 Band and servo component • Forward OWC component • Forward clutch component • Low OWC component • Low/reverse clutch component • Transaxle case			
STEP	INSPECTION		ACTION
1	**Powertrain control system** • Are there any problems with the following? • Electrical input/output • Vehicle wiring harness • PCM • Electrical pressure control (EPC) solenoid • Transaxle fluid temperature (TFT) sensor ☞ 05–17A ELECTRICAL SYSTEM COMPONENT [LA4A-EL]	Yes	Run OBD test Perform pinpoint tests "BA, BB, BC, BD, BE, BF and E" ☞ 05–01A AUTOMATIC TRANSAXLE ON-BOARD DIAGNOSIS [LA4A-EL], Pinpoint Test
		No	Go to next step
2	**Control valve body** • Do any of the following problems exist? • Bolts are not torqued to specification • Gaskets are damaged • 2/4 accumulator piston plug and seal (also soft 3–4 shift), are main regulator valve, line modulator valve (also soft 3–4 shift) stuck, damaged, or misassembled • Hydraulic passages are damaged • Pressure tap plate/gasket is damaged • Separator plates are damaged	Yes	Service as required
		No	Go to next step
3	**2/4 band and servo component** • Do any of the following problems exist? • Piston seals or piston bore are damaged, or missing • Servo rod or rod bore is damaged • 2/4 band and/or reverse clutch drum component are worn, damaged, or misassembled • Springs are damaged • Servo cover and seal are damaged	Yes	Service as required
		No	Go to next step
4	**Forward OWC component (Slips in first gear)** • Is the forward OWC component damaged or not holding?	Yes	Service as required
		No	Go to next step
5	**Forward clutch component (Slip in first gear)** • Do any of the following problems exist? • Seals are damaged • Return spring is damaged • Friction elements are damaged • Pump support seals #3, #4 are damaged	Yes	Service as required
		No	Go to next step
6	**Low OWC component** • Is the low OWC component damaged or not overrunning?	Yes	Service as required
		No	Go to next step
7	**Low/reverse clutch component** • Is there severe friction damage?	Yes	Service as required
		No	Go to next step
8	**Transaxle case** • Do any of the following problems exist? • Band anchor is damaged • Porosity/leakage in servo apply/servo release circuits	Yes	Service as required
		No	The problem is not in the automatic transaxle Go to engine symptom troubleshooting ☞ 01–01A ENGINE SYMPTOM TROUBLESHOOTING [FS]

17	SHIFT CONCERNS: SOFT/SLIPPING 2–3 SHIFT		
[TROUBLESHOOTING HINTS] • Powertrain control system • Control valve body • Oil pump • Direct clutch component • 2/4 servo • Forward OWC component • Transaxle case			
STEP	**INSPECTION**		**ACTION**
1	**Powertrain control system** • Are there any problems with the following? • Electrical input/output • Vehicle wiring harness • PCM • Electrical pressure control (EPC) solenoid • Transaxle fluid temperature (TFT) sensor ☞ 05–17A ELECTRICAL SYSTEM COMPONENT [LA4A-EL]	Yes	Run OBD test Perform pinpoint tests "BA, BB, BC, BD, BE, BF and D" ☞ 05–01A AUTOMATIC TRANSAXLE ON-BOARD DIAGNOSIS [LA4A-EL], Pinpoint Test
		No	Go to next step
2	**Control valve body** • Do any of the following problems exist? • Bolts are not torqued to specification • Gasket leaks • Line modulator valve (also soft 1–2 and 3–4 shifts), servo release shuttle valve are stuck, damaged, or misassembled • Hydraulic passages are damaged • Separator plates are damaged • Pressure tap plate/gasket leaks	Yes	Service as required
		No	Go to next step
3	**Oil pump** • Do any of the following problems exist? • Bolts are not torqued to specification • Gaskets are damaged • Pump support seals #4 and #5 are damaged, or missing	Yes	Service as required
		No	Go to next step
4	**Direct clutch component** • Do any of the following problems exist? • Seals or piston are damaged • Piston bore is damaged • Friction is damaged, worn, or excessive end clearance • Check ball is not seating properly • Return spring component is damaged	Yes	Service as required
		No	Go to next step
5	**2/4 Servo** • Do any of the following problems exist? • Piston or piston bore is damaged • Servo rod or rod bore is damaged	Yes	Service as required
		No	Go to next step
6	**Forward OWC component** • Is the forward OWC component damaged or not holding	Yes	Service as required
		No	Go to next step
7	**Transaxle case** • Do any of the following problems exist? • Leakage in the servo apply, servo release or direct clutch circuits	Yes	Service as required
		No	The problem is not in the automatic transaxle Go to engine symptom troubleshooting ☞ 01–01A ENGINE SYMPTOM TROUBLESHOOTING [FS]

18	SHIFT CONCERNS: SOFT/SLIPPING 3–4 SHIFT		
[TROUBLESHOOTING HINTS] • Powertrain control system • Control valve body • 2/4 band and servo component • Direct clutch component • Transaxle case			
STEP	**INSPECTION**		**ACTION**
1	**Powertrain control system** • Are there any problems with the following? • Electrical input/output • Vehicle wiring harness • PCM • Electrical pressure control (EPC) solenoid • Transaxle fluid temperature (TFT) sensor ☞ 05–17A ELECTRICAL SYSTEM COMPONENT [LA4A-EL]	Yes	Run OBD test Perform Pinpoint Tests "BA, BB, BC, BD, BE, BF and E" ☞ 05–01A AUTOMATIC TRANSAXLE ON-BOARD DIAGNOSIS [LA4A-EL], Pinpoint Test
		No	Go to next step
2	**Control valve body** • Do any of the following problems exist? • Bolts are not torqued to specification • Gasket leaks • Line modulator valve, 2/4 accumulator valve plug and seal (also soft 1–2 shift), are stuck, damaged, misassembled • Pressure tap plate/gasket leaks • Hydraulic passages are damaged • Separator plates are damaged, or orifice is blocked	Yes	Service as required
		No	Go to next step
3	**2/4 band and servo component** • Do any of the following problems exist? • 2/4 Band and/or reverse clutch drum component are worn, damaged, or misassembled • Piston seals or piston bore is damaged, or missing • Servo cover or seal is damaged • Servo rod or rod bore is damaged • Springs are damaged	Yes	Service as required
		No	Go to next step
4	**Direct clutch component** **Note** • May also have third gear slip • Do any of the following problems exist? • Seals are damaged, or missing • Piston are damaged • Check ball is damaged, missing, or leaking • Return spring is damaged • Friction elements are damaged	Yes	Service as required
		No	Go to next step
5	**Transaxle case** • Do any of the following problems exist? • Band anchor is damaged • Leakage in the servo apply and servo release	Yes	Service as required
		No	The problem is not in the automatic transaxle Go to engine symptom troubleshooting ☞ 01–01A ENGINE SYMPTOM TROUBLESHOOTING [FS]

19	SHIFT CONCERNS: SOFT/SLIPPING 4–3 SHIFT (AUTOMATIC)		
[TROUBLESHOOTING HINTS] • Powertrain control system • Control valve body • 2/4 band and servo component • Direct clutch component • Forward/coasting clutch component • Transaxle case			
STEP	**INSPECTION**		**ACTION**
1	**Powertrain control system** • Are there any problems with the following? • Electrical input/output • Vehicle wiring harness • PCM • Electrical pressure control (EPC) solenoid • Vehicle speedometer sensor (VSS) • Mass air flow (MAF) sensor • Throttle position (TP) sensor ☞ 05–17A ELECTRICAL SYSTEM COMPONENT [LA4A-EL]	Yes	Run OBD test Perform pinpoint tests "E" ☞ 05–01A AUTOMATIC TRANSAXLE ON-BOARD DIAGNOSIS [LA4A-EL], Pinpoint Test
		No	Go to next step
2	**Control valve body** • Do any of the following problems exist? • Bolts are not torqued to specification • Gasket leaks • Servo release shutter valve, main regulator valve are stuck, damaged, or misassembled • Hydraulic passages are damaged • Pressure tap plate/gasket leaks, or damaged • Separator plates are damaged, or blocked	Yes	Service as required
		No	Go to next step
3	**2/4 band and servo component** • Do any of the following problems exist? • 2/4 band and/or reverse clutch drum component are damaged, worn, or misassembled • Servo return spring is broken • Servo rod is damaged • Piston seal is damaged	Yes	Service as required
		No	Go to next step
4	**Direct clutch component** • Do any of the following problems exist? • Seals are damaged, or missing • Piston is damaged • Check ball is damaged, missing, or leaking • Return spring is damaged • Friction elements are damaged	Yes	Service as required
		No	Go to next step
5	**Forward/coasting clutch component** • Do any of the following problems exist? • Seals are damaged, or missing • Piston is damaged • Friction elements are worn, or damaged • Check ball is not functioning • Forward clutch piston and return spring are damaged	Yes	Service as required
		No	Go to next step
6	**Transaxle case** • Do any of the following problems exists? • Porosity/cross leaks in servo apply, servo release, direct clutch circuits	Yes	Service as required
		No	The problem is not in the automatic transaxle Go to engine symptom troubleshooting ☞ 01–01A ENGINE SYMPTOM TROUBLESHOOTING [FS]

20	SHIFT CONCERNS: SOFT/SLIPPING 3–2 SHIFT (AUTOMATIC)		
[TROUBLESHOOTING HINTS] • Powertrain control system • Control valve body • Oil pump • 2/4 band and servo component • Direct clutch component • Transaxle case			
STEP	INSPECTION		ACTION
1	**Powertrain control system** • Are there any problems with the following? • Electrical input/output • Vehicle wiring harness • PCM • Electrical pressure control (EPC) solenoid • Throttle position (TP) sensor • Vehicle speedometer sensor (VSS) • MAF • 3–2 timing/coasting clutch solenoid (3–2T/CCS) ☞ 05–17A ELECTRICAL SYSTEM COMPONENT [LA4A-EL]	Yes	Run OBD test Perform pinpoint tests "E and G" ☞ 05–01A AUTOMATIC TRANSAXLE ON-BOARD DIAGNOSIS [LA4A-EL], Pinpoint Test
		No	Go to next step
2	**Control valve body** • Do any of the following problems exist? • Bolts are not torqued to specification • Gasket is damaged • 3–2 Timing valve, solenoid regulator valve, 3–2 control valve are stuck, damaged, or misassembled • 3–2T/CCS solenoid malfunction • Pressure tap plate/gasket leaks, or damaged • Separator plates are damaged, or blocked	Yes	Service as required
		No	Go to next step
3	**Oil pump** • Do any of the following problems exist? • Bolts are not torqued to specification • Gaskets are damaged • Porosity/cross leaks • Pump support seal Rings #4, 5, 6 are damaged, or misassembled • Forward to direct passage leaks	Yes	Service as required
		No	Go to next step
4	**2/4 band and servo component** • Do any of the following problems exist? • 2/4 band and/or reverse clutch drum component are damaged, worn, or misassembled • Servo piston are damaged • Servo return and cushion springs are damaged, or misassembled • Springs are damaged, or misassembled • Servo rod is bent, or damaged	Yes	Service as required
		No	Go to next step
5	**Direct clutch component** • Do any of the following problems exist? • Return spring is damaged, or broken • Friction elements is damaged, or worn • Check ball is not releasing • Piston or seal is damaged	Yes	Service as required
		No	Go to next step
6	**Transaxle case** • Do any of the following problems exist? • Band anchor is damaged • Leakage in the servo apply/release circuits • Case bore is damaged (Servo Rod)	Yes	Service as required
		No	The problem is not in the automatic transaxle Go to engine symptom troubleshooting ☞ 01–01A ENGINE SYMPTOM TROUBLESHOOTING [FS]

21	SHIFT CONCERNS: SOFT/SLIPPING 2–1 SHIFT (AUTOMATIC OR KICKDOWN)		
[TROUBLESHOOTING HINTS] • Powertrain control system • Oil pump • 2/4 band and servo component • Forward clutch component • Low one-way clutch (OWC) component			
STEP	**INSPECTION**		**ACTION**
1	**Powertrain control system** • Are there any problems with the following? • Electrical input/output • Vehicle wiring harness • PCM • Electrical pressure control (EPC) solenoid • Transaxle fluid temperature (TFT) sensor • Throttle position (TP) sensor • Mass air flow (MAF) sensor ☞ 05–17A ELECTRICAL SYSTEM COMPONENT [LA4A-EL]	Yes	Run OBD test Perform pinpoint tests "BA, BB, BC, BD, BE, BF and E" ☞ 05–01A AUTOMATIC TRANSAXLE ON-BOARD DIAGNOSIS [LA4A-EL], Pinpoint Test
		No	Go to next step
2	**Oil pump** • Do any of the following problems exist? • Gaskets are damaged • Porosity/cross leaks • Pump support seals #3 and 4 are leaking, misassembled, or damaged	Yes	Service as required
		No	Go to next step
3	**2/4 band and servo component** • Do any of the following problems exist? • Piston is damaged • Return spring is damaged	Yes	Service as required
		No	Go to next step
4	**Forward clutch component** • Do any of the following problems exist? • Piston or seals are damaged • Friction elements are damaged	Yes	Service as required
		No	Go to next step
5	**Low OWC component** • Is the low OWC damaged or not holding?	Yes	Service as required
		No	The problem is not in the automatic transaxle Go to engine symptom troubleshooting ☞ 01–01A ENGINE SYMPTOM TROUBLESHOOTING [FS]

22	SHIFT CONCERNS: HARSH 1–2 SHIFT		
[TROUBLESHOOTING HINTS] • Powertrain control system • Control valve body • Oil pump • 2/4 band and servo component • Forward clutch component • Transaxle case			
STEP	**INSPECTION**		**ACTION**
1	**Powertrain control system** • Are there any problems with the following? • Electrical input/output • Vehicle wiring harness • PCM • Electrical pressure control (EPC) solenoid • Transaxle fluid temperature (TFT) sensor • Turbine shaft speed (TSS) sensor • Throttle position (TP) sensor • Vehicle speedometer sensor (VSS) • Mass air flow (MAF) sensor • TCC • Transaxle range (TR) switch ☞ 05–17A ELECTRICAL SYSTEM COMPONENT [LA4A-EL]	Yes	Run OBD test Perform pinpoint tests "BA, BB, BC, BD, BE, BF, C, D, E, and F" ☞ 05–01A AUTOMATIC TRANSAXLE ON-BOARD DIAGNOSIS [LA4A-EL], Pinpoint Test
		No	Go to next step
2	**Control valve body** • Do any of the following problems exist? • Bolts are not torqued to specification • Gasket leaks • 2/4 accumulator valve, 3–2 control valve (also harsh 3–4 shift) are stuck, damaged, or misassembled • Separator plates are damaged • Hydraulic passages are damaged	Yes	Service as required
		No	Go to next step
3	**Oil pump** • Do any of the following problems exist? • Bolts are not torqued to specification • Gasket are damaged • Pump support seal rings #3 and #4 are damaged • Porosity/cross leaks	Yes	Service as required
		No	Go to next step
4	**2/4 band and servo component** • Do any of the following problems exist? • Cushion return springs are damaged • Band is damaged, worn • 2/4 band and/or reverse clutch drum component are worn, damaged, or misassembled	Yes	Service as required
		No	Go to next step
5	**Forward clutch component** • Do any of the following problems exist? • Seals are damaged • Return spring is damaged • Friction elements are damaged	Yes	Service as required
		No	Go to next step
6	**Transaxle case** • Is the band anchor area damaged?	Yes	Service as required
		No	The problem is not in the automatic transaxle Go to engine symptom troubleshooting ☞ 01–01A ENGINE SYMPTOM TROUBLESHOOTING [FS]

23	SHIFT CONCERNS: HARSH 2–3 SHIFT		
[TROUBLESHOOTING HINTS] • Powertrain control system • Control valve body • Oil pump • Direct clutch component • 2/4 servo • Transaxle case			
STEP	INSPECTION		ACTION
1	**Powertrain control system** • Are there any problems with the following? • Electrical input/output • Vehicle wiring harness • PCM • Electrical pressure control (EPC) solenoid • Transaxle range (TR) switch • Vehicle speedometer sensor (VSS) • Transaxle fluid temperature (TFT) sensor • Mass air flow (MAF) sensor • TCC solenoid • Turbine shaft speed (TSS) sensor ☞ 05–17A ELECTRICAL SYSTEM COMPONENT [LA4A-EL]	Yes	Run OBD test Perform pinpoint tests "BA, BB, BC, BD, BE, BF, C, D, E, and F" ☞ 05–01A AUTOMATIC TRANSAXLE ON-BOARD DIAGNOSIS [LA4A-EL], Pinpoint Test
		No	Go to next step
2	**Control valve body** • Do any of following problems exist? • Bolts are not torqued to specification • Gasket leaks • Line modulator valve (also 1–2 and 3–4 harsh shift), servo release shuttle valve are stuck, damaged, or misassembled • Separator plates are damaged • Hydraulic passages are damaged	Yes	Service as required
		No	Go to next step
3	**Oil pump** • Do any of the following problems exist? • Bolts are not torqued to specification • Gasket is damaged • Porosity/cross leaks • Pump support seal rings #4 and #5 are damaged	Yes	Service as required
		No	Go to next step
4	**Direct clutch component** • Do any of the following problems exist? • Piston or piston bore is damaged • Friction elements are damaged, or worn • Check ball is not seating properly • Return spring component is damaged • Forward/coasting/direct (F/C/D) clutch cylinder splines are damaged	Yes	Service as required
		No	Go to next step
5	**2/4 Band Servo** • Do any of the following problems exist? • Piston or piston bore is damaged • Servo rod is damaged	Yes	Service as required
		No	Go to next step
6	**Transaxle Case** • Do any of the following problems exist? • Leakage in the servo apply, servo release, or direct clutch circuits • Servo rod bore is damaged	Yes	Service as required
		No	The problem is not in the automatic transaxle Go to engine symptom troubleshooting ☞ 01–01A ENGINE SYMPTOM TROUBLESHOOTING [FS]

24	SHIFT CONCERNS: HARSH 3–4 SHIFT		
[TROUBLESHOOTING HINTS] • Powertrain control system • Control valve body • Oil pump • 2/4 band and servo component • Coasting clutch component • Direct clutch component • Transaxle case			
STEP	**INSPECTION**		**ACTION**
1	**Powertrain control system** • Are there any problems with the following? • Electrical input/output • Vehicle wiring harness • PCM • Electrical pressure control (EPC) solenoid • Transaxle range (TR) switch • Vehicle speedometer sensor (VSS) • 3–2 timing/coasting clutch solenoid (3–2T/CCS) • Transaxle fluid temperature (TFT) sensor • Turbine shaft speed (TSS) sensor • Throttle position (TP) sensor • Mass air flow (MAF) sensor • TCC solenoid ☞ 05–17A ELECTRICAL SYSTEM COMPONENT [LA4A-EL]	Yes	Run OBD test Perform pinpoint tests "BA, BB, BC, BD, BE, BF, C, D, E, F, and G" ☞ 05–01A AUTOMATIC TRANSAXLE ON-BOARD DIAGNOSIS [LA4A-EL], Pinpoint Test
		No	Go to next step
2	**Control valve body** • Do any of the following problems exist? • Bolts are not torqued to specification • Gasket leaks • Line modulator valve (also harsh 1–2 and 2–3 shifts), 3–2 control valve, 2/4 accumulator valve, coasting clutch valve are stuck, damaged, or misassembled • Hydraulic passages are damaged • Separator plates are damaged, or blocked	Yes	Service as required
		No	Go to next step
3	**Oil pump** • Do any of the following problems exist? • Bolts are not torqued to specification • Gasket is damaged • Porosity/cross leaks • Coasting clutch teflon seals are damaged	Yes	Service as required
		No	Go to next step
4	**2/4 band and servo component** • Do any of the following problems exist? • 2/4 band and/or reverse clutch drum component are damaged, worn, or misassembled • Servo piston or cover is damaged, or leaking • Springs are damaged	Yes	Service as required
		No	Go to next step
5	**Coasting clutch component** • Do any of the following problems exist? • Piston or seals are damaged, or missing • Friction is damaged, or worn • Check ball is not functioning	Yes	Service as required
		No	Go to next step
6	**Direct clutch component** • Do any of the following problems exist? • Piston or seals are damaged, or missing • Check ball damaged, missing, or leaking • Return spring is damaged • Friction elements are damaged • F/C/D clutch cylinder splines are damaged	Yes	Service as required
		No	Go to next step
7	**Transaxle Case** • Is the band anchor damaged?	Yes	Service as required
		No	The problem is not in the automatic transaxle Go to engine symptom troubleshooting ☞ 01–01A ENGINE SYMPTOM TROUBLESHOOTING [FS]

25	SHIFT CONCERNS: HARSH 4–3 SHIFT (AUTOMATIC)		
[TROUBLESHOOTING HINTS] • Powertrain control system • Control valve body • Oil pump • 2/4 band and servo component • Coasting clutch component • Transaxle case			
STEP	INSPECTION		ACTION
1	**Powertrain control system** • Are there any problems with the following? • Electrical input/output • Vehicle wiring harness • PCM • Electrical pressure control (EPC) solenoid • Transaxle range (TR) switch • Vehicle speedometer sensor (VSS) • Throttle position (TP) sensor • Transaxle fluid temperature (TFT) sensor • Mass air flow (MAF) sensor • Turbine shaft speed (TSS) sensor • 3–2 timing/coasting clutch solenoid (3–2T/CCS) • TCC solenoid ☞ 05–17A ELECTRICAL SYSTEM COMPONENT [LA4A-EL]	Yes	Run OBD test Perform pinpoint tests "BA, BB, BC, BD, BE, BF, C, D, E, F and G" ☞ 05–01A AUTOMATIC TRANSAXLE ON-BOARD DIAGNOSIS [LA4A-EL], Pinpoint Test
		No	Go to next step
2	**Control valve body** • Do any of the following problems exist? • Bolts are not torqued to specification • Gasket leaks • Servo release shutter valve, 3–2 timing/coast clutch valve are stuck, damaged, or misassembled • Hydraulic passages are damaged • Separator plates are damaged, or blocked	Yes	Service as required
		No	Go to next step
3	**Oil pump** • Do any of the following problems exist? • Bolts are not torqued to specification • Porosity/cross leaks, seal rings are damaged, missing or ball plug is leaking • Gasket damaged • Pump support seal rings #2, 3, 4, and #5 (Coast and direct circuits) are damaged	Yes	Service as required
		No	Go to next step
4	**2/4 band and servo component** • Do any of the following problems exist? • Servo rod is bent, or damaged • Servo return spring is broken	Yes	Service as required
		No	Go to next step
5	**Coasting clutch component** • Do any of the following problems exist? • Seals are damaged, or missing • Piston is damaged • Friction elements are worn, or damaged • Check ball is not functioning • Forward clutch piston and return spring are damaged	Yes	Service as required
		No	Go to next step
6	**Transaxle Case** • Do any of the following problems exist? • Porosity/cross leaks in servo apply, servo release, direct clutch, coasting clutch circuits	Yes	Service as required
		No	The problem is not in the automatic transaxle Go to engine symptom troubleshooting ☞ 01–01A ENGINE SYMPTOM TROUBLESHOOTING [FS]

26	SHIFT CONCERNS: HARSH 3–2 SHIFT (AUTOMATIC)		
[TROUBLESHOOTING HINTS] • Powertrain control system • Control valve body • Oil pump • Direct clutch component • 2/4 band and servo component • Transaxle case			
STEP	INSPECTION		ACTION
1	**Powertrain control system** • Are there any problems with the following? • Electrical input/output • Vehicle wiring harness • PCM • Electrical pressure control (EPC) solenoid • Transaxle range (TR) switch • Vehicle speedometer sensor (VSS) • 3–2 timing/coasting clutch solenoid (3–2T/CCS) • Transaxle fluid temperature (TFT) sensor • Mass air flow (MAF) sensor • Throttle position (TP) sensor • Turbine shaft speed (TSS) sensor • TCC solenoid ☞ 05–17A ELECTRICAL SYSTEM COMPONENT [LA4A-EL]	Yes	Run OBD test Perform pinpoint tests "BA, BB, BC, BD, BE, BF, C, D, E, F, and G" ☞ 05–01A AUTOMATIC TRANSAXLE ON-BOARD DIAGNOSIS [LA4A-EL], Pinpoint Test
		No	Go to next step
2	**Control valve body** • Do any of the following problems exist? • Bolts are not torqued to specification • Gasket is damaged • 3–2 timing valve, are solenoid regulator valve, 3–2 control valve are stuck, damaged, misassembled • Hydraulic passages are damaged • Separator plates are damaged, or blocked • 3–2T/CCS solenoid malfunction	Yes	Service as required
		No	Go to next step
3	**Oil pump** • Do any of the following problems exist? • Bolts are not torqued to specification • Gaskets are damaged • Porosity/cross leaks • Pump support seal rings are damaged, or misassembled	Yes	Service as required
		No	Go to next step
4	**Direct clutch component** • Do any of the following problems exist? • Return spring are damaged, broken • Friction elements are damaged, worn • Check ball is not exhausting • Servo rod is bent, or damaged	Yes	Service as required
		No	Go to next step
5	**2/4 band and servo component** • Do any of the following problems exist? • 2/4 band and/or reverse clutch drum component are damaged, worn, or misassembled • Servo piston is damaged • Servo return and cushion springs are damaged, or misassembled • Springs damaged, misassembled	Yes	Service as required
		No	Go to next step
6	**Transaxle case** • Do any of the following problems exist? • Band anchor is damaged • Leaks • Servo rod bore is damaged	Yes	Service as required
		No	The problem is not in the automatic transaxle Go to engine symptom troubleshooting ☞ 01–01A ENGINE SYMPTOM TROUBLESHOOTING [FS]

27	TORQUE CONVERTER CLUTCH: NO APPLY		
[TROUBLESHOOTING HINTS] • Powertrain control system • Control valve body • Torque converter component			
STEP	**INSPECTION**		**ACTION**
1	**Powertrain control system** • Are there any problems with the following? • Electrical input/output • Vehicle wiring harness • PCM • Transaxle fluid temperature (TFT) sensor • TCC solenoid • Brake switch • Turbine shaft speed (TSS) sensor ☞ 05–17A ELECTRICAL SYSTEM COMPONENT [LA4A-EL]	Yes	Run OBD test Perform pinpoint tests "BA, BB, BC, BD, BE, BF, C, and F" ☞ 05–01A AUTOMATIC TRANSAXLE ON-BOARD DIAGNOSIS [LA4A-EL], Pinpoint Test
		No	Go to next step
2	**Control valve body** • Do any of the following problems exist? • Bolts are not torqued to specification • Gaskets are damaged • Solenoid pressure regulator valve, bypass clutch control valve and plunger, converter regulator valve are stuck, damaged, or misassembled • TCC solenoid malfunction, or being stuck • Hydraulic passages are damaged • Separator plates are damaged, or blocked	Yes	Service as required
		No	Go to next step
3	**Torque converter component** • Do any of the following problems exist? • Leakage • Internal damage	Yes	Perform torque converter test ☞ 05–17A MECHANICAL SYSTEM TEST [LA4A-EL], Torque Converter Clutch Operation Test
		No	Replace the torque converter component

28	TORQUE CONVERTER CLUTCH; ALWAYS APPLIED/MAY STALL ENGINE		
[TROUBLESHOOTING HINTS] • Powertrain control system • Control valve body • Oil pump • Torque converter component • Transaxle case			
STEP	**INSPECTION**		**ACTION**
1	**Powertrain control system** • Are there any problems with the following? • Electrical input/output • Vehicle wiring harness • PCM • Transaxle fluid temperature (TFT) sensor • TCC solenoid ☞ 05–17A ELECTRICAL SYSTEM COMPONENT [LA4A-EL]	Yes	Run OBD test Perform pinpoint tests "BA, BB, BC, BD, BE, BF and C" ☞ 05–01A AUTOMATIC TRANSAXLE ON-BOARD DIAGNOSIS [LA4A-EL], Pinpoint Test
		No	Go to next step
2	**Control valve body** • Do any of the following problems exist? • Bolts are not torqued to specification • Gaskets are damaged • Bypass clutch control valve and plunger (always applied), converter regulator valve are stuck, damaged, or misassembled • Separator plates are damaged, or blocked **Note** • Converter is not applied in first gear or reverse gear • TCC solenoid malfunction • Pressure tap plate/gasket are damaged • Hydraulic Passages are damaged	Yes	Service as required
		No	Go to next step

STEP	INSPECTION		ACTION
3	**Oil pump** • Do any of the following problems exist? • Bolts are not torqued to specification • Gaskets are damaged • Pump support #1, seal ring is damaged, missing, misassembled	Yes	Service as required
		No	Go to next step
4	**Torque converter component** • Do any of the following problems exist? • Internal seals are damaged • Piston plate is damaged, or stuck to cover	Yes	Service as required
		No	Go to next step
5	**Transaxle case** • Do any of the following problems exist? • Porosity/cross leaks in CBY circuit	Yes	Service as required
		No	The problem is fixed

29	OTHER: POOR VEHICLE ACCELERATION/PERFORMANCE		
[TROUBLESHOOTING HINTS] • Powertrain control system • Internal and external shift linkages • Torque converter clutch • Converter OWC			
STEP	**INSPECTION**		**ACTION**
1	**Powertrain control system** • Are there any problems with the following? • Engine • Electrical input/output • Vehicle wiring harness • PCM • Transaxle fluid temperature (TFT) sensor • Throttle position (TP) sensor • O/D OFF switch ☞ 05–17A ELECTRICAL SYSTEM COMPONENT [LA4A-EL]	Yes	Run OBD test If the problem is engine related, go to engine symptom troubleshooting ☞ 01–01A ENGINE SYMPTOM TROUBLESHOOTING [FS] If the problem is not engine related, perform pinpoint tests "BA, BB, BC, BD, BE, BF, C and D" ☞ 05–01A AUTOMATIC TRANSAXLE ON-BOARD DIAGNOSIS [LA4A-EL], Pinpoint Test
		No	Go to next step
2	**Internal and external shift linkages** • Do any of the following problems exist? • Damaged • Misadjusted • Misassembled ☞ 05–18 SELECTOR LEVER REMOVAL/INSTALLATION	Yes	Service as required
		No	Go to next step
3	**Torque converter clutch** • Is the torque converter clutch always applied?	Yes	Perform Symptom Troubleshooting No.28 ☞ 05–01A AUTOMATIC TRANSAXLE SYMPTOM TROUBLESHOOTING [LA4A-EL]
		No	Go to next step
4	**Converter one-way clutch (OWC)** • Is the converter OWC damaged?	Yes	Service as required
		No	Perform road test and verify proper shift schedule and engagements Service as required ☞ 05–17A ROAD TEST [LA4A-EL]

30	OTHER: ENGINE WILL NOT CRANK		
[TROUBLESHOOTING HINTS] • Powertrain control system • Internal or external shift linkages • Transaxle range (TR) switch			
STEP	**INSPECTION**		**ACTION**
1	**Powertrain control system** • Are there any problems with the following? • Engine • Electrical input/output • Vehicle wiring harness • PCM • Transaxle range (TR) switch ☞ 05–17A ELECTRICAL SYSTEM COMPONENT [LA4A-EL]	Yes	Run OBD test If the problem is engine related, go to engine symptom troubleshooting ☞ 01–01A ENGINE SYMPTOM TROUBLESHOOTING [FS] If the problem is not engine related, perform pinpoint tests "D" ☞ 05–01A AUTOMATIC TRANSAXLE ON-BOARD DIAGNOSIS [LA4A-EL], Pinpoint Test
		No	Go to next step
2	**Internal and external shift linkage or TR switch** • Do any of the following problems exist? • Damaged • Misadjusted • Misassembled ☞ 05–18 SELECTOR LEVER REMOVAL/INSTALLATION ☞ 05–17A AUTOMATIC TRANSAXLE REMOVAL/INSTALLATION [LA4A-EL]	Yes	Service as required
		No	Go to next step
3	**Starter/drive plate** • Do any of the following problems exist? • Damaged • Misassembled ☞ 05–19 STARTER INSPECTION ☞ 05–17A DRIVE PLATE REMOVAL/INSTALLATION [LA4A-EL]	Yes	Service as required
		No	The problem is fixed

31	OTHER: NO "P" POSITION		
[TROUBLESHOOTING HINTS] • Internal or external shift linkages • Park mechanism			
STEP	**INSPECTION**		**ACTION**
1	**Internal or external shift linkages** • Do any of the following problems exist? • Damaged, misadjusted, or misassembled ☞ 05–18 SELECTOR LEVER REMOVAL/INSTALLATION	Yes	Service as required
		No	Go to next step
2	**Park mechanism** • Do any of following problems exist? • Park gear on driven sprocket component, parking pawl return spring, park pawl ratcheting springs, park pawl shaft • Manual lever, cam apply lever • Manual lever detent spring • TR switch, parking pawl apply cam • Manual shaft nut is damaged • Missing or misassembled	Yes	Service as required
		No	The problem is fixed

32	OTHER: TRANSAXLE OVERHEATING		
[TROUBLESHOOTING HINTS] • ATF • Powertrain control system • Oil cooler • Control valve body • Torque converter clutch • Oil pump • Chain pan • Thermostatic oil level control valve • Transaxle case/converter housing/starter support			
STEP	**INSPECTION**		**ACTION**
1	**ATF** • Are there any problems with the following? • Level • Condition ☞ 05–17A AUTOMATIC TRANSAXLE FLUID (ATF) INSPECTION [LA4A-EL]	Yes	Service as required
		No	Go to next step
2	**Powertrain control system** • Are there any problems with the following? • Electrical input/output • Vehicle wiring harness • PCM • TCC solenoid • Transaxle fluid temperature (TFT) sensor • Turbine shaft speed (TSS) sensor ☞ 05–17A ELECTRICAL SYSTEM COMPONENT [LA4A-EL]	Yes	Run OBD Tests Perform pinpoint tests "BA, BB, BC, BD, BE, BF, C and F" ☞ 05–01A AUTOMATIC TRANSAXLE ON-BOARD DIAGNOSIS [LA4A-EL], Pinpoint Test
		No	Go to next step
3	**Oil cooler** • Do any of the following problems exist? • Damaged • Blocked • Reversed • Restricted • Leaking • Misassembled ☞ 05–17A OIL COOLER REMOVAL/INSTALLATION [LA4A-EL]	Yes	Service as required
		No	Go to next step
4	**Control valve body** • Do any of the following problems exist? • Bolts are not torqued to specification • Main regulator valve, bypass clutch control valve, converter regulator valve are stuck, damaged, or misassembled • Hydraulic passages are damaged • Separator plates/gaskets are damaged • TCC solenoid malfunction (OFF)	Yes	Service as required
		No	Go to next step
5	**Torque converter clutch** • Does the torque converter clutch apply?	Yes	Go to next step
		No	Perform symptom troubleshooting No.27 ☞ 05–01A AUTOMATIC TRANSAXLE SYMPTOM TROUBLESHOOTING [LA4A-EL]
6	**Oil pump** • Do any of the following problems exist? • Gasket is damaged • Rear lube passage is blocked	Yes	Service as required
		No	Go to next step
7	**Chain pan** • Is it missing?	Yes	Install the chain pan
		No	Go to next step
8	**Thermostatic oil level control valve** • Do any of the following problems exist? • Stuck open or damaged • Gasket is damaged, or missing • Bolt or bracket is damaged, missing, or improperly installed	Yes	Service as required
		No	Go to next step
9	**Transaxle case/converter housing/stater support** • Do any of the following problems exist? • Front lube passage is blocked or restricted • TC, CI, CT passages are blocked, or restricted	Yes	Service as required
		No	The problem is not in the automatic transaxle Check cooling system

33	OTHER: NO ENGINE BRAKING IN FIRST GEAR ("1" RANGE)		
[TROUBLESHOOTING HINTS] • Powertrain control system • Control valve body • Oil pump • Coasting clutch component • Low/reverse clutch component			
STEP	INSPECTION		ACTION
1	**Powertrain control system** • Are there any problems with the following? • Electrical input/output • Vehicle wiring harness • PCM • 3–2 timing/coasting clutch solenoid (3–2T/CCS) ☞ 05–17A ELECTRICAL SYSTEM COMPONENT [LA4A-EL]	Yes	Run OBD test Perform pinpoint tests "G" ☞ 05–01A AUTOMATIC TRANSAXLE ON-BOARD DIAGNOSIS [LA4A-EL], Pinpoint Test
		No	Go to next step
2	**Control Valve Body** • Do any of the following problems exist? • Bolts are not torqued to specification • Gaskets are damaged • Low/reverse modulator valve, coasting clutch valve are stuck damaged, or misassembled • 3–2T/CCS is stuck, or damaged • Hydraulic passages are damaged • Pressure tap plate/gasket is damaged • Separator plate/gasket is damaged	Yes	Service as required
		No	Go to next step
3	**Oil pump** • Do any of the following problems exist? • Pump support seal rings #2 and #3 for the coast clutch circuit are or damaged, missing	Yes	Service as required
		No	Go to next step
4	**Coasting clutch component** • Do any of the following problems exist? • Assembly misassembled, or damaged • Forward clutch hub seal is damaged • Piston or seals are damaged • Check ball is damaged, or missing	Yes	Service as required
		No	Go to next step
5	**Low/reverse clutch component** • Do any of the following problems exist? • Misassembled • Damaged • Piston or seals are damaged	Yes	Service as required
		No	The problem is fixed

34	OTHER: NO ENGINE BRAKING IN "2" RANGE		
[TROUBLESHOOTING HINTS] • Powertrain control system • Internal or external shift linkages • Control valve body • Oil pump • Forward one-way clutch (OWC) component • Coasting clutch component			
STEP	INSPECTION		ACTION
1	**Powertrain control system** • Are there any problems with the following? • Electrical inputs/outputs • Vehicle wiring harness • PCM • 3–2T/CCS ☞ 05–17A ELECTRICAL SYSTEM COMPONENT [LA4A-EL]	Yes	Run OBD tests Perform pinpoint tests "G" ☞ 05–01A AUTOMATIC TRANSAXLE ON-BOARD DIAGNOSIS [LA4A-EL], Pinpoint Test
		No	Go to next step

STEP	INSPECTION		ACTION
2	**Internal or external shift linkages** • Do any of the following problems exist? • Damaged • Misadjusted • Misassembled ☞ 05–18 SELECTOR LEVER REMOVAL/INSTALLATION	Yes	Service as required
		No	Go to next step
3	**Control valve body** • Do any of the following problems exist? • 3–4 Shift valve, 1–2 shift valve, coasting clutch control valve are stuck, or damaged • 3–2 timing/coasting clutch solenoid (3–2T/CCS) is stuck, or damaged	Yes	Service as required
		No	Go to next step
4	**Oil Pump** • Do any of the following problems exist? • Pump support seal rings #2 and #3 for the coasting clutch circuit are damaged, or missing	Yes	Service as required
		No	Go to next step
5	**Forward OWC component** • Do any of the following problems exist? • Damaged • Misassembled	Yes	Service as required
		No	Go to next step
6	**Coasting clutch component** • Do any of the following problems exist? • Assembly misassembled, damaged • Forward clutch hub seal is damaged • Piston or seals are damaged • Check ball is damaged, or missing	Yes	Service as required
		No	The problem is not in the automatic transaxle Go to engine symptom troubleshooting ☞ 01–01A ENGINE SYMPTOM TROUBLESHOOTING [FS]

35	OTHER: VEHICLE MOVEMENT WITH GEAR SELECTOR IN "N" POSITION

[TROUBLESHOOTING HINTS]
- Internal or external shift linkages
- Oil pump
- Forward/coasting clutch component

STEP	INSPECTION		ACTION
1	**Internal or external shift Linkages** • Do any of the following problems exist? • Damaged • Misadjusted • Misassembled ☞ 05–18 SELECTOR LEVER REMOVAL/INSTALLATION	Yes	Service as required
		No	Go to next step
2	**Oil pump** • Do any of the following problems exists? • Gaskets are severely damaged • Pump support seal ring #2, leakage from lube circuit into FC circuit	Yes	Service as required
		No	Go to next step
3	**Forward/coasting clutch component** • Do any of the following problems exist? • Friction plates are severely damaged • Return spring is damaged • Check ball is damaged, missing	Yes	Service as required
		No	The problem is fixed

36	OTHER: SHIFT EFFORTS HIGH

[TROUBLESHOOTING HINTS]
- Shift interlock
- Internal or external shift linkage
- Transaxle case
- Control valve body

STEP	INSPECTION		ACTION
1	**Shift Interlock** • Is there any problem? ☞ 05–18 SELECTOR LEVER REMOVAL/INSTALLATION	Yes	Service as required
		No	Go to next step

STEP	INSPECTION		ACTION
2	**Internal or external shift linkages** • Do any of the following problems exist? • Damaged • Misadjusted • Misassembled ☞ 05–18 SELECTOR LEVER REMOVAL/INSTALLATION	Yes	Service as required
		No	Go to next step
3	**Transaxle case** • Do any of the following problems exist? • Manual lever is damaged • Park mechanism is damaged • Shaft is bent • Detent lever shaft bore (in case) is damaged • Detent spring is bent, or damaged • Nut is loose	Yes	Service as required
		No	Go to next step
4	**Control valve body** • Do any of the following problems exist? • Bolts are not torqued to specification • Manual valve is stuck, or damaged	Yes	Service as required
		No	The problem is fixed

37	OTHER: EXTERNAL LEAKS		
[TROUBLESHOOTING HINTS] • ATF			
STEP	**INSPECTION**		**ACTION**
1	**ATF** • Is ATF improper level? ☞ 05–17A AUTOMATIC TRANSAXLE FLUID (ATF) INSPECTION [LA4A-EL]	Yes	Service as required
		No	Go to next step
	Seals/gaskets Differential seal, speedometer seal, pump, main control cover, servo cover, split frange converter inpeller hub, manual shift seal **Others** • Cooler fitting, pressure tap plug, line pressure plug, case porosity, case are cracked • Vent is blocked, or damaged **Connectors/sensors** • Transaxle connector, Transaxle range (TR) switch, Turbine shaft speed (TSS) sensor seal		Locate source of leak Service as required

38	OTHER: NOISE/VIBRATION — FORWARD/REVERSE		
[TROUBLESHOOTING HINTS] • For noises/vibrations that change with engine speed • For noises/vibrations that chenge with vehicle speed • Other noises/vibrations			
STEP	**INSPECTION**		**ACTION**
1	**For noises/vibrations that change with engine speed** • Are there any problems with the following? • Torque converter • ATF level (low) pump cavitation • Oil pump • Engine drive accessories • Cooler lines grounding out • Drive plate	Yes	Service as required
		No	Go to next step

STEP	INSPECTION		ACTION
2	**For noises/vibrations that change with vehicle speed** • Are there any problems with the following? • Engine mount • Tires • Drive shaft or joint shaft • Differential (final drive/chain) • Suspension • Planetary gear sets • Chain grounding to chain pan • Forward one-way clutch • Torque converter	Yes	Service as required
		No	Go to next step
3	**Other noise/vibrations** • Are there any problems with the following? • Shift cable vibration grounding • Cooler lines grounding	Yes	Service as required
		No	The problem is fixed

39	O/D OFF INDICATOR LIGHT DOES NOT ILLUMINATE WHEN O/D OFF SWITCH IS TURNED ON		
[TROUBLESHOOTING HINTS] The malfunction is in the O/D OFF switch			
STEP	INSPECTION		ACTION
1	Are other indicator lights illuminated with ignition switch at ON?	Yes	Inspect meter fuse
		No	Go to next step
2	Check the O/D OFF switch Is O/D OFF switch okay?	Yes	Go to next step
		No	Repair or replace any detective parts
3	Check the voltage at the following terminal of the powertrain control module ☞ 01–40A POWERTRAIN CONTROL MODULE (PCM) INSPECTION [FS] • O/D OFF indicator light signal Is terminal voltage okay?	Yes	Go to next step
		No	Replace powertrain control module ☞ 01–40A POWERTRAIN CONTROL MODULE (PCM) REMOVAL/INSTALLATION [FS]
4	Check the O/D OFF indicator light Is O/D OFF indicator light okay?	Yes	Inspect for open circuit or disconnected connector in harness between the following • Ignition switch and O/D OFF indicator light • O/D OFF indicator light and PCM
		No	Repair or replace any defective parts

40	O/D OFF INDICATOR LIGHT ILLUMINATES WHEN O/D OFF SWITCH IS NOT TURNED ON		
[TROUBLESHOOTING HINTS] O/D OFF switch malfunction			
STEP	INSPECTION		ACTION
1	Check the O/D OFF switch Is O/D OFF switch okay?	Yes	Go to next step
		No	Repair or replace any defective parts
2	Check the voltage at the following terminal of the powertrain control module ☞ 01–40A POWERTRAIN CONTROL MODULE (PCM) INSPECTION [FS] • O/D OFF indicator light signal Is terminal voltage okay?	Yes	Inspect for short circuit or disconnected connector in harness between the following • O/D OFF indicator light and PCM
		No	Replace powertrain control module ☞ 01–40A POWERTRAIN CONTROL MODULE (PCM) REMOVAL/INSTALLATION [FS]

05–01B TROUBLESHOOTING [GF4A-EL]

FOREWARD [GF4A-EL] **05–01B–1**
AUTOMATIC TRANSAXLE ON BOARD DIAGNOSIS [GF4A-EL] **05–01B–1**
On-Board Diagnosis Test **05–01B–1**
Diagnostic Trouble Code **05–01B–1**
AUTOMATIC TRANSAXLE BASIC INSPECTION [GF4A-EL] **05–01B–20**
AUTOMATIC TRANSAXLE SYMPTOM TROUBLESHOOTING [GF4A-EL] **05–01B–21**
Diagnosis Index **05–01B–21**
Quick Diagnosis Chart **05–01B–23**
Quick Diagnosis Chart (cont'd) **05–01B–24**
Symptom Troubleshooting **05–01B–25**

FOREWARD [GF4A-EL]

W6U501W05

Before proceeding with the following troubleshooting.
- Refer to section GENERAL INFORMATION to understand the basic troubleshooting.
- Perform the diagnostic trouble code inspection.
- If a diagnostic trouble code is displayed, proceed with inspection steps for the codes.
- When the engine can be started, perform "ENGINE TUNE-UP" (01–10B ENGINE TUNE-UP [KL]).

AUTOMATIC TRANSAXLE ON BOARD DIAGNOSIS [GF4A-EL]

W6U501W06

On-Board Diagnosis Test

Refer to 01–01B ENGINE ON BOARD DIAGNOSIS [KL], On-Board Diagnosis Test.

Diagnostic Trouble Code

Note
- If the DTC that you want to find is not in the following chart, please refer to the "Diagnostic Trouble Code Number" chart in 01–01B ENGINE ON-BOARD DIAGNOSIS [KL].
- DTC's that are not directly related to Mazda vehicles (ones not written in the W/M) may appear on the NGS tester screen. Please ensure that only those DTC's that are written in the workshop manual are used.

DTC No.	Diagnosed Circuit	Condition	MIL	DC*1	OBD Monitor*2	O/D OFF indicator light
P0102	Mass air flow sensor	Circuit low input	☞ 01–01B ENGINE ON-BOARD DIAGNOSIS [KL]			N/A
P0103	Mass air flow sensor	Circuit high input	☞ 01–01B ENGINE ON-BOARD DIAGNOSIS [KL]			N/A
P0106	EGR boost sensor	Input signal out of self-test range	☞ 01–01B ENGINE ON-BOARD DIAGNOSIS [KL]			N/A
P0107	EGR boost sensor	Input signal out of self-test minimum	☞ 01–01B ENGINE ON-BOARD DIAGNOSIS [KL]			N/A
P0108	EGR boost sensor	Input signal out of self-test maximum	☞ 01–01B ENGINE ON-BOARD DIAGNOSIS [KL]			N/A
P0112	Intake air temperature sensor	Circuit low input	☞ 01–01B ENGINE ON-BOARD DIAGNOSIS [KL]			N/A
P0113	Intake air temperature sensor	Circuit high input	☞ 01–01B ENGINE ON-BOARD DIAGNOSIS [KL]			N/A
P0117	Engine coolant temperature sensor	Circuit low input	☞ 01–01B ENGINE ON-BOARD DIAGNOSIS [KL]			N/A
P0118	Engine coolant temperature sensor	Circuit high input	☞ 01–01B ENGINE ON-BOARD DIAGNOSIS [KL]			N/A
P0122	Throttle position sensor	Circuit low input	☞ 01–01B ENGINE ON-BOARD DIAGNOSIS [KL]			N/A
P0123	Throttle position sensor	Circuit high input	☞ 01–01B ENGINE ON-BOARD DIAGNOSIS [KL]			N/A

DTC No.	Diagnosed Circuit	Condition	MIL	DC*1	OBD Monitor*2	O/D OFF indicator light
P0125	Engine coolant temperature sensor	Insufficient coolant temperature to enter a closed loop fuel control	☞ 01–01B ENGINE ON-BOARD DIAGNOSIS [KL]			N/A
P0131	Heated oxygen sensor (Front RH)	Circuit low voltage	☞ 01–01B ENGINE ON-BOARD DIAGNOSIS [KL]			N/A
P0133	Heated oxygen sensor (Front RH)	Circuit low response	☞ 01–01B ENGINE ON-BOARD DIAGNOSIS [KL]			N/A
P0135	Heated oxygen sensor heater (Front RH)	Circuit malfunction	☞ 01–01B ENGINE ON-BOARD DIAGNOSIS [KL]			N/A
P0136	Heated oxygen sensor (Middle)	Circuit malfunction	☞ 01–01B ENGINE ON-BOARD DIAGNOSIS [KL]			N/A
P0141	Downstream heated oxygen sensor heater	Circuit malfunction	☞ 01–01B ENGINE ON-BOARD DIAGNOSIS [KL]			N/A
P0151	Heated oxygen sensor (Front LH)	Circuit low voltage	☞ 01–01B ENGINE ON-BOARD DIAGNOSIS [KL]			N/A
P0153	Heated oxygen sensor (Front LH)	Circuit low response	☞ 01–01B ENGINE ON-BOARD DIAGNOSIS [KL]			N/A
P0155	Heated oxygen sensor (Front LH)	Circuit malfunction	☞ 01–01B ENGINE ON-BOARD DIAGNOSIS [KL]			N/A
P0156	Heated oxygen sensor (Rear)	Circuit malfunction	☞ 01–01B ENGINE ON-BOARD DIAGNOSIS [KL]			N/A
P0161	Heated oxygen sensor heater (Rear)	Circuit malfunction	☞ 01–01B ENGINE ON-BOARD DIAGNOSIS [KL]			N/A
P0171	Adaptive fuel control system (RH)	System too lean	☞ 01–01B ENGINE ON-BOARD DIAGNOSIS [KL]			N/A
P0172	Adaptive fuel control system (RH)	System too rich	☞ 01–01B ENGINE ON-BOARD DIAGNOSIS [KL]			N/A
P0174	Adaptive fuel control system (LH)	System too lean	☞ 01–01B ENGINE ON-BOARD DIAGNOSIS [KL]			N/A
P0175	Adaptive fuel control system (LH)	System too rich	☞ 01–01B ENGINE ON-BOARD DIAGNOSIS [KL]			N/A
P0230	Fuel pump	Circuit malfunction	☞ 01–01B ENGINE ON-BOARD DIAGNOSIS [KL]			N/A
P0300	Ignition	Random misfire detected	☞ 01–01B ENGINE ON-BOARD DIAGNOSIS [KL]			N/A
P0301	Ignition	Cylinder No.1 misfire detected	☞ 01–01B ENGINE ON-BOARD DIAGNOSIS [KL]			N/A
P0302	Ignition	Cylinder No.2 misfire detected	☞ 01–01B ENGINE ON-BOARD DIAGNOSIS [KL]			N/A
P0303	Ignition	Cylinder No.3 misfire detected	☞ 01–01B ENGINE ON-BOARD DIAGNOSIS [KL]			N/A
P0304	Ignition	Cylinder No.4 misfire detected	☞ 01–01B ENGINE ON-BOARD DIAGNOSIS [KL]			N/A
P0305	Ignition	Cylinder No.5 misfire detected	☞ 01–01B ENGINE ON-BOARD DIAGNOSIS [KL]			N/A
P0306	Ignition	Cylinder No.6 misfire detected	☞ 01–01B ENGINE ON-BOARD DIAGNOSIS [KL]			N/A
P0320	Ignition engine speed	Input circuit malfunction	☞ 01–01B ENGINE ON-BOARD DIAGNOSIS [KL]			FLASH
P0325	Knock sensor	Circuit malfunction	☞ 01–01B ENGINE ON-BOARD DIAGNOSIS [KL]			N/A
P0340	Camshaft position sensor	Circuit malfunction (CID)	☞ 01–01B ENGINE ON-BOARD DIAGNOSIS [KL]			N/A
P0400	Exhaust gas recirculation (EGR)	Flow malfunction	☞ 01–01B ENGINE ON-BOARD DIAGNOSIS [KL]			N/A
P0420	Catalyst system	Efficiency below threshold	☞ 01–01B ENGINE ON-BOARD DIAGNOSIS [KL]			N/A

DTC No.	Diagnosed Circuit	Condition	MIL	DC*1	OBD Monitor*2	O/D OFF indicator light
P0442	Evaporative emission control system	Leak detected (Small leak)	☞ 01–01B ENGINE ON-BOARD DIAGNOSIS [KL]			N/A
P0443	Evaporative emission control system	Purge solenoid valve circuit malfunction	☞ 01–01B ENGINE ON-BOARD DIAGNOSIS [KL]			N/A
P0446	Evaporative emission control system	Vent control malfunction	☞ 01–01B ENGINE ON-BOARD DIAGNOSIS [KL]			N/A
P0452	Evaporative emission control system	Pressure sensor low input	☞ 01–01B ENGINE ON-BOARD DIAGNOSIS [KL]			N/A
P0453	Evaporative emission control system	Pressure sensor high input	☞ 01–01B ENGINE ON-BOARD DIAGNOSIS [KL]			N/A
P0455	Evaporative emission control system	Control leak detected (Gross leak)	☞ 01–01B ENGINE ON-BOARD DIAGNOSIS [KL]			N/A
P0460	Fuel gauge sender unit	Circuit malfunction (Open/short and functional)	☞ 01–01B ENGINE ON-BOARD DIAGNOSIS [KL]			N/A
P0500	Vehicle speed sensor	Sensor malfunction	☞ 01–01B ENGINE ON-BOARD DIAGNOSIS [KL]			FLASH
P0505	Idle air control system	System malfunction	☞ 01–01B ENGINE ON-BOARD DIAGNOSIS [KL]			N/A
P0603	PCM	Keep alive memory (KAM) test error	☞ 01–01B ENGINE ON-BOARD DIAGNOSIS [KL]			N/A
P0605	PCM	Read only memory (ROM) test error	☞ 01–01B ENGINE ON-BOARD DIAGNOSIS [KL]			N/A
P0703	Brake switch	Input malfunction	☞ 01–01B ENGINE ON-BOARD DIAGNOSIS [KL]			N/A
P0704	Clutch switch	Input circuit malfunction	☞ 01–01B ENGINE ON-BOARD DIAGNOSIS [KL]			N/A
P0705	Transaxle range switch	Circuit malfunction (Short)	ON	1	CCM	OFF
P0706	Transaxle range switch	Circuit malfunction (Open)	ON	2	CCM	OFF
P0710	Transaxle fluid temperature sensor	Circuit malfunction (Short/open)	ON	1	CCM	OFF
P0711	Transaxle fluid temperature sensor	Circuit malfunction (Stuck)	ON	2	CCM	OFF
P0715	Input/turbine speed sensor	Insufficient input from TSS sensor	ON	1	CCM	FLASH
P0731	Shift solenoid A, shift solenoid B or internal parts	Incorrect 1GR ratio	ON	2	CCM	OFF
P0732	Shift solenoid A, shift solenoid B or internal parts	Incorrect 2GR ratio	ON	2	CCM	OFF
P0733	Shift solenoid A, shift solenoid B or internal parts	Incorrect 3GR ratio	ON	2	CCM	OFF
P0734	Shift solenoid A, shift solenoid B or internal parts	Incorrect 4GR ratio	ON	2	CCM	OFF
P0740	Torque converter clutch	Circuit malfunction	ON	2	CCM	OFF
P0743	TCC control solenoid	TCC solenoid circuit failure during self-test	ON	1	CCM	FLASH
P0745	Pressure control solenoid	Malfunction	OFF	1	CCM	FLASH
P0750	Shift solenoid A	Shift solenoid A circuit failure	ON	1	CCM	FLASH
P0755	Shift solenoid B	Shift solenoid B circuit failure	ON	1	CCM	FLASH

DTC No.	Diagnosed Circuit	Condition	MIL	DC*1	OBD Monitor*2	O/D OFF indicator light
P0760	Shift solenoid C	Shift solenoid C circuit failure	ON	1	CCM	FLASH
P1001	Active self-test	Standard corporate protocol communication error	☞ 01–01B ENGINE ON-BOARD DIAGNOSIS [KL]			N/A
P1100	Mass air flow sensor	Sensor intermittent	☞ 01–01B ENGINE ON-BOARD DIAGNOSIS [KL]			N/A
P1101	Mass air flow sensor	Input signal out of self-test range	☞ 01–01B ENGINE ON-BOARD DIAGNOSIS [KL]			N/A
P1112	Intake air temperature sensor	Sensor intermittent	☞ 01–01B ENGINE ON-BOARD DIAGNOSIS [KL]			N/A
P1116	Engine coolant temperature sensor	Input signal out of self-test range	☞ 01–01B ENGINE ON-BOARD DIAGNOSIS [KL]			N/A
P1117	Engine coolant temperature sensor	Sensor intermittent	☞ 01–01B ENGINE ON-BOARD DIAGNOSIS [KL]			N/A
P1120	Throttle position sensor	Out of range low	☞ 01–01B ENGINE ON-BOARD DIAGNOSIS [KL]			FLASH
P1121	Throttle position sensor	Input signal inconsistent with MAF sensor	☞ 01–01B ENGINE ON-BOARD DIAGNOSIS [KL]			N/A
P1124	Throttle position sensor	Input signal out of self-test range	☞ 01–01B ENGINE ON-BOARD DIAGNOSIS [KL]			N/A
P1125	Throttle position sensor	Circuit intermittent	☞ 01–01B ENGINE ON-BOARD DIAGNOSIS [KL]			N/A
P1127	Heated oxygen sensor heater	Exhaust system too cool	☞ 01–01B ENGINE ON-BOARD DIAGNOSIS [KL]			N/A
P1130	Upstream heated oxygen sensor	Lack of HO2S 11 switch adaptive fuel at limit	☞ 01–01B ENGINE ON-BOARD DIAGNOSIS [KL]			N/A
P1131	Upstream heated oxygen sensor	Lack of HO2S 11 switch sensor indicates lean	☞ 01–01B ENGINE ON-BOARD DIAGNOSIS [KL]			N/A
P1132	Upstream heated oxygen sensor	Lack of HO2S 11 switch sensor indicates rich	☞ 01–01B ENGINE ON-BOARD DIAGNOSIS [KL]			N/A
P1137	Heated oxygen sensor (Middle)	Lack of HO2S 12 switch sensor indicates lean	☞ 01–01B ENGINE ON-BOARD DIAGNOSIS [KL]			N/A
P1138	Heated oxygen sensor (Middle)	Lack of HO2S 12 switch sensor indicates rich	☞ 01–01B ENGINE ON-BOARD DIAGNOSIS [KL]			N/A
P1150	Heated oxygen sensor (Front LH)	Lack of HO2S 21 switch adaptive fuel at limit	☞ 01–01B ENGINE ON-BOARD DIAGNOSIS [KL]			N/A
P1151	Heated oxygen sensor (Front LH)	Lack of HO2S 21 switch sensor indicates lean	☞ 01–01B ENGINE ON-BOARD DIAGNOSIS [KL]			N/A
P1152	Heated oxygen sensor (Front LH)	Lack of HO2S 21 switch sensor indicates rich	☞ 01–01B ENGINE ON-BOARD DIAGNOSIS [KL]			N/A
P1157	Heated oxygen sensor (Rear)	Lack of HO2S 13 switch sensor indicates lean	☞ 01–01B ENGINE ON-BOARD DIAGNOSIS [KL]			N/A
P1158	Heated oxygen sensor (Rear)	Lack of HO2S 13 switch sensor indicates rich	☞ 01–01B ENGINE ON-BOARD DIAGNOSIS [KL]			N/A
P1250	Fuel pressure regulator control solenoid valve	Circuit malfunction	☞ 01–01B ENGINE ON-BOARD DIAGNOSIS [KL]			N/A

DTC No.	Diagnosed Circuit	Condition	MIL	DC*1	OBD Monitor*2	O/D OFF indicator light
P1409	EGR valve (Stepper motor)	Malfunction	☞ 01–01B ENGINE ON-BOARD DIAGNOSIS [KL]			N/A
P1450	Evaporative emission control system	Unable to bleed up fuel tank vacuum	☞ 01–01B ENGINE ON-BOARD DIAGNOSIS [KL]			N/A
P1451	Evaporative emission control system	Vent control valve malfunction (Open/short)	☞ 01–01B ENGINE ON-BOARD DIAGNOSIS [KL]			N/A
P1460	Wide open throttle air conditioning cutoff	Circuit malfunction	☞ 01–01B ENGINE ON-BOARD DIAGNOSIS [KL]			N/A
P1464	Air conditioner (A/C)	Demand out of self-test range	☞ 01–01B ENGINE ON-BOARD DIAGNOSIS [KL]			N/A
P1474	Fan control system	Cooling fan control primary circuit malfunction	☞ 01–01B ENGINE ON-BOARD DIAGNOSIS [KL]			N/A
P1479	Fan control system	Condenser fan control primary circuit malfunction	☞ 01–01B ENGINE ON-BOARD DIAGNOSIS [KL]			N/A
P1487	EGR boost solenoid valve	Circuit malfunction	☞ 01–01B ENGINE ON-BOARD DIAGNOSIS [KL]			N/A
P1501	Vehicle speed sensor	Input signal out of self-test range	☞ 01–01B ENGINE ON-BOARD DIAGNOSIS [KL]			N/A
P1504	Idle air control (IAC) system	Circuit intermittent	☞ 01–01B ENGINE ON-BOARD DIAGNOSIS [KL]			N/A
P1506	Idle air control (IAC) system	Overspeed error	☞ 01–01B ENGINE ON-BOARD DIAGNOSIS [KL]			N/A
P1507	Idle air control (IAC) system	Underspeed error	☞ 01–01B ENGINE ON-BOARD DIAGNOSIS [KL]			N/A
P1602	Immobilizer system	Communication error (Immobilizer unit — PCM)	☞ 01–01B ENGINE ON-BOARD DIAGNOSIS [KL]			N/A
P1603	Immobilizer system	No ID in PCM	☞ 01–01B ENGINE ON-BOARD DIAGNOSIS [KL]			N/A
P1604	Immobilizer system	No code word in PCM	☞ 01–01B ENGINE ON-BOARD DIAGNOSIS [KL]			N/A
P1621	Immobilizer system	Code word unmatch	☞ 01–01B ENGINE ON-BOARD DIAGNOSIS [KL]			N/A
P1622	Immobilizer system	ID unmatch	☞ 01–01B ENGINE ON-BOARD DIAGNOSIS [KL]			N/A
P1623	Immobilizer system	Code word/ID write/read error	☞ 01–01B ENGINE ON-BOARD DIAGNOSIS [KL]			N/A
P1624	Immobilizer system	Communication counter	☞ 01–01B ENGINE ON-BOARD DIAGNOSIS [KL]			N/A
P1650	Power steering pressure sensor	Out of self-test range	☞ 01–01B ENGINE ON-BOARD DIAGNOSIS [KL]			N/A
P1703	Brake switch	Out of self-test range	☞ 01–01B ENGINE ON-BOARD DIAGNOSIS [KL]			N/A
P1705	Transaxle range switch	Out of self-test range	OFF	2	CCM	OFF
P1765	3–2 timing control solenoid	Malfunction	OFF	2	CCM	FLASH
P1780	O/D OFF switch	Circuit malfunction (Open, short)	OFF	1	CCM	OFF

*1 : DC signifies the number of consecutive drive cycles required to illuminate the MIL.
*2 : Appropriate OBD II Monitor.
N/A : Not Available

Caution

- **Do not disconnect the battery to clear diagnostic trouble codes. This will erase the keep alive memory information which may cause a drivability concern.**
- **After repairing a failure, perform the After-repair Procedures to verify the fault has been corrected.**

DTC	P0705 P0706 P1705	**Transaxle range switch circuit malfunction (Short)** **Transaxle range switch circuit malfunction (Open)** **Transaxle range switch out of self-test range**
DESCRIPTION	• No input signal or input of two or more signals from transaxle range switch	
POSSIBLE CAUSE	• Transaxle range switch malfunction • Damaged wiring or connectors between transaxle range switch and powertrain control module • Powertrain control module malfunction	

STEP	INSPECTION		ACTION
1	Are powertrain control module and transaxle range switch connections at the connector and connector pins okay?	Yes	Go to next step
		No	Repair or replace connectors, then go to step 7
2	Check NGS tester display • Connect NGS tester to data link connector • Are transaxle range switch range and NGS tester display correct? ☞ 01–40B POWERTRAIN CONTROL MODULE (PCM) INSPECTION [KL]	Yes	Go to step 7
		No	Go to next step
3	Check for continuity between terminals of transaxle range switch and powertrain control module • Disconnect negative battery cable • Disconnect transaxle range switch and powertrain control module connectors • Is there continuity between powertrain control module connector terminals 6, 9, 7, 32 and corresponding connector terminals at the transaxle range switch?	Yes	Go to next step
		No	Repair or replace connectors and wiring, then go to step 7
4	Check for continuity between terminal of the transaxle range switch as follows • Disconnect negative battery cable • Disconnect transaxle range switch connector • Is there continuity between the terminals? ☞ 05–17B TRANSAXLE RANGE SWITCH INSPECTION [GF4A-EL]	Yes	Go to next step
		No	Repair or adjust the transaxle range switch, then go to step 7 ☞ 05–17B TRANSAXLE RANGE SWITCH ADJUSTMENT [GF4A-EL]
5	Check for continuity between terminal of transaxle range switch and main relay • Disconnect negative battery cable • Disconnect transaxle range switch and main relay • Is there continuity between the terminals?	Yes	Go to next step
		No	Repair or replace connectors and wiring, then go to step 7
6	After diagnostic trouble code has been cleared, recheck if diagnostic trouble code is shown ☞ 01–01B ENGINE ON-BOARD DIAGNOSIS [KL]	Yes	Return to step 2
		No	Problem is a temporary poor connection of wiring or connectors, and should be investigated further, then go to next step
7	Erase diagnostic trouble code from memory. Can code be output after performing "After Repair Procedure"?	Yes	Go to appropriate inspection procedure
		No	Finished

DTC	P0710 P0711	Transaxle fluid temperature sensor circuit malfunction (Short/open) Transaxle fluid temperature sensor circuit (Stuck)
DESCRIPTION		• Powertrain control module input voltage is less than 0.09 V or over 5.0 V • The input voltage from the transaxle fluid temperature sensor does not change when driving the vehicle
POSSIBLE CAUSE		• Transaxle fluid temperature sensor malfunction • Damaged wiring or connectors between transaxle fluid temperature sensor and powertrain control module • Powertrain control module malfunction

STEP	INSPECTION		ACTION
1	Are powertrain control module and transaxle fluid temperature sensor connections at the connector and connector pins okay?	Yes	Go to next step
		No	Repair or replace connectors, then go to step 6
2	Check NGS tester display • Connect NGS tester to data link connector • Are transaxle fluid temperature sensor and NGS tester display correct? ☞ 01–40B POWERTRAIN CONTROL MODULE (PCM) INSPECTION [KL]	Yes	Go to step 6
		No	Go to next step
3	Check for continuity between terminals of transaxle fluid temperature sensor and powertrain control module • Disconnect negative battery cable • Disconnect transaxle fluid temperature sensor and powertrain control module connectors • Is there continuity between powertrain control module terminal 37 and I terminal at the transaxle fluid temperature sensor? • Is there continuity between powertrain control module terminal 91 and J terminal at the transaxle fluid temperature sensor?	Yes	Go to next step
		No	Repair or replace connectors and wiring, then go to step 6
4	Measure resistance between transaxle fluid temperature sensor terminals • Disconnect negative battery cable • Disconnect transaxle fluid temperature sensor connector • Is resistance between terminals correct? ☞ 05–17B TRANSAXLE FLUID TEMPERATURE SENSOR INSPECTION [GF4A-EL]	Yes	Go to next step
		No	Replace transaxle fluid temperature sensor, then go to step 6 ☞ 05–17B TRANSAXLE FLUID TEMPERATURE SENSOR REMOVAL/INSTALLATION [GF4A-EL]
5	After diagnostic trouble code has been cleared, recheck if diagnostic trouble code is shown ☞ 01–01B ENGINE ON-BOARD DIAGNOSIS [KL]	Yes	Return to step 2
		No	Problem is a temporary poor connection of wiring or connectors, and should be investigated further, then go to next step
6	Erase diagnostic trouble code from memory. Can code be output after performing "After Repair Procedure"?	Yes	Go to appropriate inspection procedure
		No	Finished

DTC P0715	Input/turbine speed sensor insufficient input from TSS sensor
DESCRIPTION	• Signal from input/turbine speed sensor is not input to powertrain control module when vehicle is moving
POSSIBLE CAUSE	• Input/turbine speed sensor malfunction • Damaged harness or connectors between input/turbine speed sensor and powertrain control module • Powertrain control module malfunction

STEP	INSPECTION		ACTION
1	Are powertrain control module and input/turbine speed sensor connection at the connector and connector pins okay?	Yes	Go to next step
		No	Repair or replace connectors, then go to step 6
2	Check NGS tester display • Connect NGS tester to data link connector • Are input/turbine speed sensor and NGS tester display correct? ☞ 01–40B POWERTRAIN CONTROL MODULE (PCM) INSPECTION [KL]	Yes	Go to step 6
		No	Go to next step
3	Check for continuity between terminals of input/turbine speed sensor and powertrain control module • Disconnect negative battery cable • Disconnect input/turbine speed sensor and powertrain control module connectors • Is there continuity between powertrain control module connector terminals 84, 23 and corresponding connector terminals at the input/turbine speed sensor?	Yes	Go to next step
		No	Repair or replace connectors and wiring, then go to step 6
4	Measure resistance between input/turbine speed sensor terminals • Disconnect negative battery cable • Disconnect input/turbine speed sensor connector • Is resistance between terminals correct? ☞ 05–17B INPUT/TURBINE SPEED SENSOR INSPECTION [GF4A-EL]	Yes	Go to next step
		No	Replace the input/turbine speed sensor, then go to step 6 ☞ 05–17B INPUT/TURBINE SPEED SENSOR REMOVAL/INSTALLATION [GF4A-EL]
5	After diagnostic trouble code has been cleared, recheck if diagnostic trouble code is shown ☞ 01–01B ENGINE ON-BOARD DIAGNOSIS [KL]	Yes	Return to step 2
		No	Problem is a temporary poor connection of wiring or connectors, and should be investigated further, then go to next step
6	Erase diagnostic trouble code from memory. Can code be output after performing "After Repair Procedure"?	Yes	Go to appropriate inspection procedure
		No	Finished

DTC P0731	Shift solenoid A, shift solenoid B or internal parts incorrect 1GR ratio
DESCRIPTION	• Powertrain control module outputs solenoid pattern of first gear when gear ratio is other than first gear
POSSIBLE CAUSE	• ATF level low • Solenoid valve malfunction • Line pressure low • Control valve stuck • Powertrain control module malfunction

STEP	INSPECTION		ACTION
1	Is diagnostic trouble code P0750, P0755, or P0760 indicated?	Yes	Refer to flowchart for diagnostic trouble code P0750, P0755, or P0760 and perform troubleshooting, then go to step 9
		No	Go to next step
2	Are amount and condition (color) of ATF okay? Check for ATF leakage at transaxle connection and gasket Color ① Transparent red: Normal ② Black: Defective part in powertrain ③ Light red: Water mixed in fluid ④ Reddish brown: Deteriorated ATF ☞ 05–17B AUTOMATIC TRANSAXLE FLUID (ATF) INSPECTION [GF4A-EL]	Yes	Go to next step
		No	Adjust ATF amount or replace ATF if necessary, then go to step 9 • If ATF color is 2, measure line pressure at idle when pressure is less than specification, go to step 3 • If ATF color is 3 or 4, replace ATF
3	Is turbine speed okay under following conditions? • Connect NGS tester to data link connector • Throttle is 2/8 open, and vehicle speed is 20 km/h {12 mph} in D range **Turbine speed** **Approx. 2,100 rpm** ☞ 01–40B POWERTRAIN CONTROL MODULE (PCM) INSPECTION [KL]	Yes	Go to step 8
		No	Above specification: Go to next step Below specification: Go to step 6
4	Check line pressure in D range (O/D OFF SW OFF) • Is line pressure okay? ☞ 05–17B MECHANICAL SYSTEM TEST [GF4A-EL], Line Pressure Test	Yes	Go to next step
		No	Repair or replace any defective parts, then go to step 9 • Line pressure is low only when in D ro 2 range: ATF leakage in forward clutch circuit
5	Check stall speed in D range (O/D OFF SW OFF) • Is stall speed okay? ☞ 05–17B MECHANICAL SYSTEM TEST [GF4A-EL], Stall Test	Yes	Go to next step
		No	Repair or replace any defective parts, then go to step 9 • High in all range: Shifting of forward clutch, one-way clutch 1 • High in D range: Shifting of one-way clutch 2
6	Inspect operation of shift solenoid A, B, C • Disconnect negative battery cable • Disconnect solenoid connector • Is it operating okay? ☞ 05–17B SOLENOID VALVES INSPECTION [GF4A-EL]	Yes	Go to next step
		No	Replace shift solenoid A, B, or C, then go to step 9 ☞ 05–17B SOLENOID VALVES REMOVAL/INSTALLATION [GF4A-EL]
7	Check operation of each valve and inspect return spring • Is each valve operating okay and is return spring okay?	Yes	Go to next step
		No	Repair or replace control valve and replace return spring, then go to step 9
8	After diagnostic trouble code has been cleared, recheck if diagnostic trouble code is shown ☞ 01–01B ENGINE ON-BOARD DIAGNOSIS [KL]	Yes	Return to step 3
		No	Problem is a temporary slip of clutch, and should be investigated further, then go to next step
9	Erase diagnostic trouble code from memory. Can code be output after performing "After Repair Procedure"?	Yes	Go to appropriate inspection procedure
		No	Finished

DTC P0732	Shift solenoid A, shift solenoid B or internal parts incorrect 2GR ratio
DESCRIPTION	• Powertrain control module output solenoid pattern of second gear when gear ratio is other than second gear
POSSIBLE CAUSE	• ATF level low • Forward clutch slippage • 2–4 brake band slippage • Solenoid valve malfunction • Line pressure low • One-way clutch 1 slippage • Control valve stuck • Powertrain control module malfunction

STEP	INSPECTION		ACTION
1	Is diagnostic trouble code P0750, P0755, or P0760 indicated?	Yes	Refer to flowchart for diagnostic trouble code P0750, P0755, or P0760 and perform troubleshooting, then go to step 9
		No	Go to next step
2	Are amount and condition (color) of ATF okay? Check for ATF leakage at transaxle connection and gasket Color ① Transparent red: Normal ② Black: Defective part in powertrain ③ Light red: Water mixed in fluid ④ Reddish brown: Deteriorated ATF ☞ 05–17B AUTOMATIC TRANSAXLE FLUID (ATF) INSPECTION [GF4A-EL]	Yes	Go to next step
		No	Adjust ATF amount or replace ATF if necessary, then go to step 9 • If ATF color is 2, measure line pressure at idle when pressure is less than specification, go to step 4 • If ATF color is 3 or 4, replace ATF
3	Is turbine speed okay under following conditions? • Connect NGS tester to data link connector • Throttle is 2/8 open, and vehicle speed is 20 km/h {12 mph} in 2 range **Turbine speed** **Approx. 1,100 rpm** ☞ 01–40B POWERTRAIN CONTROL MODULE (PCM) INSPECTION [KL]	Yes	Go to step 8
		No	Above specification: Go to next step Below specification: Go to step 6
4	Check line pressure in D, 2 range • Is line pressure okay? ☞ 05–17B MECHANICAL SYSTEM TEST [GF4A-EL], Line Pressure Test	Yes	Go to next step
		No	Repair or replace any defective parts, then go to step 9 • ATF leakage in 2–4 brake band circuit • ATF leakage in forward clutch circuit
5	Check stall speed in D, 2 range • Is stall speed okay? ☞ 05–17B MECHANICAL SYSTEM TEST [GF4A-EL], Stall Test	Yes	Go to next step
		No	Repair or replace any defective parts, then go to step 9 • 2–4 brake band slipping • Forward clutch slipping
6	Inspect operation of shift solenoid A, B, C • Disconnect negative battery cable • Disconnect solenoid connector • Is it operating okay? ☞ 05–17B SOLENOID VALVES INSPECTION [GF4A-EL]	Yes	Go to next step
		No	Replace shift solenoid A, B, or C, then go to step 9 ☞ 05–17B SOLENOID VALVES REMOVAL/INSTALLATION [GF4A-EL]
7	Check operation of each valve and inspect return spring • Is each valve operating okay and is return spring okay?	Yes	Go to next step
		No	Repair or replace control valve and replace return spring, then go to step 9
8	After diagnostic trouble code has been cleared, recheck if diagnostic trouble code is shown ☞ 01–01B ENGINE ON-BOARD DIAGNOSIS [KL]	Yes	Return to step 3
		No	Problem is a temporary slip of clutch, and should be investigated further, then go to next step
9	Erase diagnostic trouble code from memory. Can code be output after performing "After Repair Procedure"?	Yes	Go to appropriate inspection procedure
		No	Finished

DTC P0733	Shift solenoid A, shift solenoid B or internal parts incorrect 3GR ratio
DESCRIPTION	• Powertrain control module output solenoid pattern of third gear when gear ratio is other than third gear
POSSIBLE CAUSE	• ATF level low • Forward clutch slippage • 3–4 clutch slippage • Solenoid valve malfunction • Line pressure low • One-way clutch 1 slippage • Control valve stuck • Powertrain control module malfunction

STEP	INSPECTION		ACTION
1	Is diagnostic trouble code P0750, P0755, or P0760 indicated?	Yes	Refer to flowchart for diagnostic trouble code P0750, P0755, or P0760 and perform troubleshooting, then go to step 9
		No	Go to next step
2	Are amount and condition (color) of ATF okay? Check for ATF leakage at transaxle connection and gasket Color ① Transparent red: Normal ② Black: Defective part in powertrain ③ Light red: Water mixed in fluid ④ Reddish brown: Deteriorated ATF ☞ 05–17B AUTOMATIC TRANSAXLE FLUID (ATF) INSPECTION [GF4A-EL]	Yes	Go to next step
		No	Adjust ATF amount or replace ATF if necessary, then go to step 9 • If ATF color is 2, measure line pressure at idle when pressure is less than specification, go to step 4 • If ATF color is 3 or 4, replace ATF
3	Is turbine speed okay under following conditions? • Connect NGS tester to data link connector • Throttle is 2/8 open, and vehicle speed is 20 km/h {12 mph} in D range **Turbine speed** **Approx. 800 rpm** ☞ 01–40B POWERTRAIN CONTROL MODULE (PCM) INSPECTION [KL]	Yes	Go to step 8
		No	Above specification: Go to next step Below specification: Go to step 6
4	Check line pressure when solenoid connector is disconnected • Solenoid connector disconnected • Is line pressure okay? **Line pressure when third gear in D range** **Stalled: 844—902 kPa** **{8.6—9.2 kgf/cm^2, 123—130 psi}** ☞ 05–17B MECHANICAL SYSTEM TEST [GF4A-EL], Line Pressure Test	Yes	Go to next step
		No	Repair or replace any defective parts, then go to step 9 • ATF leakage in 3–4 clutch
5	Check stall speed when solenoid connector is disconnected • Solenoid connector disconnected • Is stall speed okay? **Stall speed when third gear in D range** **2,200—2,500 rpm** ☞ 05–17B MECHANICAL SYSTEM TEST [GF4A-EL], Stall Test	Yes	Go to next step
		No	Repair or replace any defective parts, then go to step 9 • 3–4 clutch slipping
6	Inspect operation of shift solenoid A, B, C • Disconnect negative battery cable • Disconnect solenoid connector • Is it operating OK? ☞ 05–17B SOLENOID VALVES INSPECTION [GF4A-EL]	Yes	Go to next step
		No	Replace shift solenoid A, B, or C ☞ 05–17B SOLENOID VALVES REMOVAL/INSTALLATION [GF4A-EL] Go to step 3
7	Check operation of each valve and inspect return spring • Is each valve operating OK and is return spring OK?	Yes	Go to next step
		No	Repair or replace control valve and replace return spring, then go to step 9
8	After diagnostic trouble code has been cleared, recheck if diagnostic trouble code is shown ☞ 01–01B ENGINE ON-BOARD DIAGNOSIS [KL]	Yes	Return to step 3
		No	Problem is a temporary slip of clutch, and should be investigated further, then go to next step

STEP	INSPECTION		ACTION
9	Erase diagnostic trouble code from memory. Can code be output after performing "After Repair Procedure"?	Yes	Go to appropriate inspection procedure
		No	Finished

DTC P0734	Shift solenoid A, shift solenoid B or internal parts incorrect 4GR ratio
DESCRIPTION	• Powertrain control module output solenoid pattern of fourth gear when gear ratio is other than fourth gear
POSSIBLE CAUSE	• ATF level low • 2–4 brake band slippage • Control valve stuck • Powertrain control module malfunction • Line pressure low • 3–4 clutch slippage • Solenoid valve malfunction

STEP	INSPECTION		ACTION
1	Is diagnostic trouble code P0750, P0755, or P0760 indicated?	Yes	Refer to flowchart for diagnostic trouble code P0750, P0755, or P0760 and perform troubleshooting, then go to step 8
		No	Go to next step
2	Are amount and condition (color) of ATF okay? Check for ATF leakage at transaxle connection and gasket Color ① Transparent red: Normal ② Black: Defective part in powertrain ③ Light red: Water mixed in fluid ④ Reddish brown: Deteriorated ATF ☞ 05–17B AUTOMATIC TRANSAXLE FLUID (ATF) INSPECTION	Yes	Go to next step
		No	Adjust ATF amount or replace ATF if necessary, then go to step 8 • If ATF color is 2, measure line pressure at idle when pressure is less than specification, repair or replace any defective parts • If ATF color is 3 or 4, replace ATF
3	Is diagnostic trouble code P0732 (Gear 2 incorrect ratio) indicated?	Yes	Refer to flowchart for diagnostic trouble code P0732 (Gear 2 incorrect ratio), and perform troubleshooting, then go to step 8
		No	Go to next step
4	Is diagnostic trouble code P0733 (Gear 3 incorrect ratio) indicated?	Yes	Refer to flowchart for diagnostic trouble code P0733 (Gear 3 incorrect ratio), and perform troubleshooting, then go to step 8
		No	Go to next step
5	Inspect operation of shift solenoid A, B, C • Disconnect negative battery cable • Disconnect solenoid connector • Is it operating okay? ☞ 05–17B SOLENOID VALVES INSPECTION [GF4A-EL]	Yes	Go to next step
		No	Replace shift solenoid A, B, or C ☞ 05–17B SOLENOID VALVES REMOVAL/INSTALLATION [GF4A-EL]
6	Check operation of each valve and inspect return spring • Is each valve operating okay and is return spring okay?	Yes	Go to next step
		No	Repair or replace control valve and replace return spring, then go to step 8
7	After diagnostic trouble code has been cleared, recheck if diagnostic trouble code is shown ☞ 01–01B ENGINE ON-BOARD DIAGNOSIS [KL]	Yes	Return to step 1
		No	Problem is a temporary slip of clutch, and should be investigated further, then go to next step
8	Erase diagnostic trouble code from memory. Can code be output after performing "After Repair Procedure"?	Yes	Go to appropriate inspection procedure
		No	Finished

DTC P0740	Torque converter clutch circuit malfunction
DESCRIPTION	• Powertrain control module outputs torque converter clutch signal, but no torque converter clutch obtained
POSSIBLE CAUSE	• ATF level low • Torque converter clutch position slippage • Powertrain control module malfunction • Line pressure low • Control valve stuck • Torque converter clutch control solenoid valve malfunction

STEP	INSPECTION		ACTION
1	Are amount and condition (color) of ATF okay? Check for ATF leakage at transaxle connection and gasket Color ① Transparent red: Normal ② Black: Defective part in powertrain ③ Light red: Water mixed in fluid ④ Reddish brown: Deteriorated ATF ☞ 05–17B AUTOMATIC TRANSAXLE FLUID (ATF) INSPECTION [GF4A-EL]	Yes	Go to next step
		No	Adjust ATF amount or replace ATF if necessary, then go to step 7 • If ATF color is 2, disassemble transaxle and repair or replace any defective parts as necessary • If ATF color is 3 or 4, replace ATF
2	Check line pressure in D range (O/D OFF SW OFF) • Is line pressure okay? ☞ 05–17B MECHANICAL SYSTEM TEST [GF4A-EL], Line Pressure Test	Yes	Go to next step
		No	Repair or replace any defective parts, then go to step 7 • ATF leakage in transaxle case, oil pump, control valve
3	Inspect operation of solenoid valve • Disconnect negative battery cable • Disconnect solenoid connector • Is it operating okay? ☞ 05–17B SOLENOID VALVE INSPECTION [GF4A-EL]	Yes	Go to next step
		No	Replace torque converter clutch control solenoid valve, then go to step 7 ☞ 05–17B SOLENOID VALVE REMOVAL/INSTALLATION [GF4A-EL]
4	Check operation of each valve and inspect return spring • Is each valve operating okay and is return spring okay?	Yes	Go to next step
		No	Repair or replace control valve and replace return spring, then go to step 7
5	Check difference between engine speed and turbine speed during torque converter clutch operation in fourth gear • Connect NGS tester to data link connector • Check difference between engine speed and turbine speed during torque converter clutch operation in fourth gear Is there a difference between engine speed and turbine speed? ☞ 01–40B POWERTRAIN CONTROL MODULE (PCM) INSPECTION [KL]	Yes	Replace torque converter, then go to step 7
		No	Go to next step
6	After diagnostic trouble code has been cleared, recheck if diagnostic trouble code is shown ☞ 01–01B ENGINE ON-BOARD DIAGNOSIS [KL]	Yes	Return to step 1
		No	Problem is a temporary slip of clutch, and should be investigated further, then go to next step
7	Erase diagnostic trouble code from memory. Can code be output after performing "After Repair Procedure"?	Yes	Go to appropriate inspection procedure
		No	Finished

DTC P0745	Pressure control solenoid malfunction
DESCRIPTION	• Damaged wiring or connectors between pressure control solenoid and powertrain control module • Short or open circuit in pressure control solenoid • Short or open circuit in powertrain control module internal transistors
POSSIBLE CAUSE	• Damaged wiring or connectors between pressure control solenoid and powertrain control module • Short or open circuit in pressure control solenoid • Short or open circuit in powertrain control module internal transistors

STEP	INSPECTION		ACTION
1	Are powertrain control module and pressure control solenoid connections at connector and connector pins okay?	Yes	Go to next step
		No	Repair or replace connector(s), then go to step 7
2	Check NGS tester display • Connect NGS tester to data link connector • Are pressure control solenoid operation and NGS tester display correct? ☞ 01–40B POWERTRAIN CONTROL MODULE (PCM) INSPECTION [KL]	Yes	Go to step 7
		No	Go to next step
3	Check for continuity between terminals of pressure control solenoid and powertrain control module • Disconnect negative battery cable • Disconnect solenoid connector and powertrain control module connectors • Is there continuity between terminals?	Yes	Go to next step
		No	Repair or replace connectors and wiring, then go to step 7
4	Check for a short circuit between terminals of pressure control solenoid and powertrain control module. • Disconnect solenoid connector and powertrain control module connector. • Connect ohmmeter between GND and pressure control solenoid connector terminal • Is continuity present?	Yes	Repair short circuit, then go to step 7
		No	Go to next step
5	Measure resistance between pressure control solenoid terminals • Disconnect negative battery cable • Disconnect solenoid connector • Is resistance between terminals correct? ☞ 05–17B SOLENOID VALVES INSPECTION [GF4A-EL]	Yes	Go to next step
		No	Replace pressure control solenoid, then go to step 7 ☞ 05–17B SOLENOID VALVES REMOVAL/INSTALLATION [GF4A-EL]
6	After diagnostic trouble code has been cleared, recheck if diagnostic trouble code is shown ☞ 01–01B ENGINE ON-BOARD DIAGNOSIS [KL]	Yes	Return to step 2
		No	Problem is a temporary poor connection of wiring or connectors, and should be investigated further, then go to next step
7	Erase diagnostic trouble code from memory. Can code be output after performing "After Repair Procedure"?	Yes	Go to appropriate inspection procedure
		No	Finished

DTC P0750	Shift solenoid A circuit failure
DESCRIPTION	• Damaged wiring or connectors between shift solenoid A and powertrain control module • Short or open circuit in shift solenoid A • Short or open circuit in powertrain control module internal transistor
POSSIBLE CAUSE	• Damaged wiring or connectors between shift solenoid A and powertrain control module • Short or open circuit in shift solenoid A • Short or open circuit in powertrain control module internal transistor

STEP	INSPECTION		ACTION
1	Are powertrain control module and shift solenoid A connections at connector and connector pins okay?	Yes	Go to next step
		No	Repair or replace connector(s), then go to step 7
2	Check NGS tester display • Connect NGS tester to data link connector • Are shift solenoid A operation and NGS tester display correct? ☞ 01–40B POWERTRAIN CONTROL MODULE (PCM) INSPECTION [KL]	Yes	Go to step 7
		No	Go to next step
3	Check for continuity between terminals of shift solenoid A and powertrain control module • Disconnect negative battery cable • Disconnect solenoid connector and powertrain control module connector • Is there continuity between terminals?	Yes	Go to next step
		No	Repair or replace connectors and wiring, then go to step 7
4	Check for a short circuit between terminals of shift solenoid A and powertrain control module. • Disconnect negative battery cable • Disconnect solenoid and powertrain control module connectors • Connect ohmmeter between GND and shift solenoid A connector terminal • Is continuity present?	Yes	Repair short circuit, then go to step 7
		No	Go to next step
5	Measure resistance at shift solenoid A terminal • Disconnect negative battery cable • Disconnect solenoid connector • Is resistance correct? ☞ 05–17B SOLENOID VALVES INSPECTION [GF4A-EL]	Yes	Go to next step
		No	Replace shift solenoid A, then go to step 7 ☞ 05–17B SOLENOID VALVES REMOVAL/INSTALLATION [GF4A-EL]
6	After diagnostic trouble code has been cleared, recheck if diagnostic trouble code is shown ☞ 01–01B ENGINE ON-BOARD DIAGNOSIS [KL]	Yes	Return to step 2
		No	Problem is a temporary poor connection of wiring or connectors, and should be investigated further, then go to next step
7	Erase diagnostic trouble code from memory. Can code be output after performing "After Repair Procedure"?	Yes	Go to appropriate inspection procedure
		No	Finished

DTC P0755	Shift solenoid B circuit failure
DESCRIPTION	• Damaged wiring or connectors between shift solenoid B and powertrain control module • Short or open circuit in shift solenoid B • Short or open circuit in powertrain control module internal transistors
POSSIBLE CAUSE	• Damaged wiring or connectors between shift solenoid B and powertrain control module • Short or open circuit in shift solenoid B • Short or open circuit in powertrain control module internal transistors

STEP	INSPECTION		ACTION
1	Are powertrain control module and shift solenoid B connections at connector and connector pins okay?	Yes	Go to next step
		No	Repair or replace connector(s), then go to step 7
2	Check NGS tester display • Connect NGS tester to data link connector • Are shift solenoid B operation and NGS tester display correct? ☞ 01–40B POWERTRAIN CONTROL MODULE (PCM) INSPECTION [KL]	Yes	Go to step 7
		No	Go to next step
3	Check for continuity between terminals of shift solenoid B and powertrain control module • Disconnect negative battery cable • Disconnect solenoid connector and powertrain control module connector • Is there continuity between terminals?	Yes	Go to next step
		No	Repair or replace connectors and wiring, then go to step 7
4	Check for a short circuit between terminals of shift solenoid B and powertrain control module. • Disconnect solenoid and powertrain control module connectors • Connect ohmmeter between GND and shift solenoid B connector terminal • Is continuity present?	Yes	Repair short circuit, then go to step 7
		No	Go to next step
5	Measure resistance at shift solenoid B terminal • Disconnect negative battery cable • Disconnect solenoid connector • Is resistance correct? ☞ 05–17B SOLENOID VALVES INSPECTION [GF4A-EL]	Yes	Go to next step
		No	Replace shift solenoid B, then go to step 7 ☞ 05–17B SOLENOID VALVES REMOVAL/INSTALLATION [GF4A-EL]
6	After diagnostic trouble code has been cleared, recheck if diagnostic trouble code is shown ☞ 01–01B ENGINE ON-BOARD DIAGNOSIS [KL]	Yes	Return to step 2
		No	Problem is a temporary poor connection of wiring or connectors, and should be investigated further, then go to next step
7	Erase diagnostic trouble code from memory. Can code be output after performing "After Repair Procedure"?	Yes	Go to appropriate inspection procedure
		No	Finished

DTC P0760	Shift solenoid C circuit failure
DESCRIPTION	• Damaged wiring or connectors between shift solenoid C and powertrain control module • Short or open circuit in shift solenoid C • Short or open circuit in powertrain control module internal transistor
POSSIBLE CAUSE	• Damaged wiring or connectors between shift solenoid C and powertrain control module • Short or open circuit in shift solenoid C • Short or open circuit in powertrain control module internal transistor

STEP	INSPECTION		ACTION
1	Are powertrain control module and shift solenoid C connections at connector and connector pins okay?	Yes	Go to next step
		No	Repair or replace connector(s), then go to step 7
2	Check NGS tester display • Connect NGS tester to data link connector • Are shift solenoid C operation and NGS tester display correct? ☞ 01–40B POWERTRAIN CONTROL MODULE (PCM) INSPECTION [KL]	Yes	Go to step 7
		No	Go to next step
3	Check for continuity between terminals of shift solenoid C and powertrain control module • Disconnect negative battery cable • Disconnect solenoid connector and powertrain control module connector • Is there continuity between terminals?	Yes	Go to next step
		No	Repair or replace connectors and wiring, then go to step 7
4	Check for a short circuit between terminals of shift solenoid C and powertrain control module. • Disconnect solenoid and powertrain control module connectors • Connect ohmmeter between GND and shift solenoid C connector terminal • Is continuity present?	Yes	Repair short circuit, then go to step 7
		No	Go to next step
5	Measure resistance at shift solenoid C terminal • Disconnect negative battery cable • Disconnect solenoid connector • Is resistance correct? ☞ 05–17B SOLENOID VALVES INSPECTION [GF4A-EL]	Yes	Go to next step
		No	Replace shift solenoid C, then go to step 7 ☞ 05–17B SOLENOID VALVES REMOVAL/INSTALLATION [GF4A-EL]
6	After diagnostic trouble code has been cleared, recheck if diagnostic trouble code is shown ☞ 01–01B ENGINE ON-BOARD DIAGNOSIS [KL]	Yes	Return to step 2
		No	Problem is a temporary poor connection of wiring or connectors, and should be investigated further, then go to next step
7	Erase diagnostic trouble code from memory. Can code be output after performing "After Repair Procedure"?	Yes	Go to appropriate inspection procedure
		No	Finished

DTC P0743	TCC control solenoid circuit failure during self-test
DESCRIPTION	• Damaged wiring or connectors between torque converter clutch control solenoid valve and powertrain control module • Short or open circuit in torque converter clutch control solenoid valve • Short or open circuit in powertrain control module internal transistors
POSSIBLE CAUSE	• Damaged wiring or connectors between torque converter clutch control solenoid valve and powertrain control module • Short or open circuit in torque converter clutch control solenoid valve • Short or open circuit in powertrain control module internal transistor

STEP	INSPECTION		ACTION
1	Are powertrain control module and torque converter clutch control solenoid valve connections at connector and connector pins okay?	Yes	Go to next step
		No	Repair or replace connector(s), then go to step 7
2	Check NGS tester display • Connect NGS tester to data link connector • Are torque converter clutch control solenoid valve operation and NGS tester display correct? ☞ 01–40B POWERTRAIN CONTROL MODULE (PCM) INSPECTION [KL]	Yes	Go to step 7
		No	Go to next step
3	Check for continuity between terminals of torque converter clutch control solenoid valve and powertrain control module • Disconnect negative battery cable • Disconnect solenoid connector and powertrain control module connector • Is there continuity between terminals?	Yes	Go to next step
		No	Repair or replace connectors and wiring, then go to step 7
4	Check for a short circuit between terminals of torque converter clutch control solenoid and powertrain control module. • Disconnect solenoid and powertrain control module connectors • Connect ohmmeter between GND and torque converter clutch control solenoid connector terminal • Is continuity present?	Yes	Repair short circuit, then go to step 7
		No	Go to next step
5	Measure resistance at torque converter clutch control solenoid valve terminal • Disconnect nagative battery cable • Disconnect solenoid connector • Is resistance correct? ☞ 05–17B SOLENOID VALVES INSPECTION [GF4A-EL]	Yes	Go to next step
		No	Replace torque converter clutch control solenoid valve, then go to step 7 ☞ 05–17B SOLENOID VALVES REMOVAL/INSTALLATION [GF4A–EL]
6	After diagnostic trouble code has been cleared, recheck if diagnostic trouble code is shown ☞ 01–01B ENGINE ON-BOARD DIAGNOSIS [KL]	Yes	Return to step 2
		No	Problem is a temporary poor connection of wiring or connectors, and should be investigated further, then go to next step
7	Erase diagnostic trouble code from memory. Can code be output after performing "After Repair Procedure"?	Yes	Go to appropriate inspection procedure
		No	Finished

DTC P1765	3–2 timing solenoid valve malfunction
DESCRIPTION	• Damaged wiring or connectors between 3–2 timing solenoid valve and powertrain control module • Short or open circuit in 3–2 timing solenoid valve • Short or open circuit in powertrain control module internal transistors
POSSIBLE CAUSE	• Damaged wiring or connectors between 3–2 timing solenoid valve and powertrain control module • Short or open circuit in 3–2 timing solenoid valve • Short or open circuit in powertrain control module internal transistors

STEP	INSPECTION		ACTION
1	Are powertrain control module and 3–2 timing solenoid valve connections at connector and connector pins okay?	Yes	Go to next step
		No	Repair or replace connector(s), then go to step 7
2	Check NGS tester display • Connect NGS tester to data link connector • Are 3–2 timing solenoid valve operation and NGS tester display correct? ☞ 01–40B POWERTRAIN CONTROL MODULE (PCM) INSPECTION [KL]	Yes	Go to step 7
		No	Go to next step
3	Check for continuity between terminals of 3–2 timing solenoid valve and powertrain control module • Disconnect negative battery cable • Disconnect solenoid connector and powertrain control module connector • Is there continuity between terminals?	Yes	Go to next step
		No	Repair or replace connectors and wiring, then go to step 7
4	Check for a short circuit between terminals of 3–2 timing solenoid valve and powertrain control module. • Disconnect solenoid and powertrain control module connectors • Connect ohmmeter between GND and 3–2 timing solenoid valve connector terminal • Is continuity present?	Yes	Repair short circuit, then go to step 7
		No	Go to next step
5	Measure resistance at 3–2 timing solenoid valve terminal • Disconnect negative battery cable • Disconnect solenoid connector • Is resistance correct? ☞ 05–17B SOLENOID VALVES INSPECTION [GF4A-EL]	Yes	Go to next step
		No	Replace 3–2 timing solenoid valve, then go to step 7 ☞ 05–17B SOLENOID VALVES REMOVAL/INSTALLATION [GF4A-EL]
6	After diagnostic trouble code has been cleared, recheck if diagnostic trouble code is shown ☞ 01–01B ENGINE ON-BOARD DIAGNOSIS [KL]	Yes	Return to step 2
		No	Problem is a temporary poor connection of wiring or connectors, and should be investigated further, then go to next step
7	Erase diagnostic trouble code from memory. Can code be output after performing "After Repair Procedure"?	Yes	Go to appropriate inspection procedure
		No	Finished

DTC P1780	O/D OFF switch circuit malfunction (Open, short)
DESCRIPTION	• Damaged wiring or connectors between O/D OFF switch and powertrain control module • Short or open circuit in O/D OFF switch • Short or open circuit in powertrain control module internal transistors
POSSIBLE CAUSE	• Damaged wiring or connectors between O/D OFF switch and powertrain control module • Short or open circuit in O/D OFF switch • Short or open circuit in powertrain control module internal transistors

STEP	INSPECTION		ACTION
1	Are powertrain control module and O/D OFF switch connections at connector and connector pins okay?	Yes	Go to next step
		No	Repair or replace connector(s), then go to step 6
2	Check NGS tester display • Connect NGS tester to data link connector • Are O/D OFF switch operation and NGS tester display correct? ☞ 01–40B POWERTRAIN CONTROL MODULE (PCM) INSPECTION [KL]	Yes	Go to step 5
		No	Go to next step
3	Check for continuity between terminals of O/D OFF switch and powertrain control module • Disconnect negative battery cable • Disconnect solenoid connector and powertrain control module connector • Is there continuity between terminals?	Yes	Go to next step
		No	Repair or replace connectors and wiring, then go to step 6
4	Measure resistance at O/D OFF switch terminal • Disconnect negative battery cable • Disconnect O/D OFF switch • Is resistance correct? ☞ 05–17B O/D OFF SWITCH INSPECTION [GF4A-EL]	Yes	Go to next step
		No	Replace O/D OFF switch, then go to step 6 ☞ 05–17B O/D OFF SWITCH REMOVAL/INSTALLATION [GF4A-EL]
5	After diagnostic trouble code has been cleared, recheck if diagnostic trouble code is shown ☞ 01–01B ENGINE ON-BOARD DIAGNOSIS [KL]	Yes	Return to step 2
		No	Problem is a temporary poor connection of wiring or connectors, and should be investigated further, then go to next step
6	Erase diagnostic trouble code from memory. Can code be output after performing "After Repair Procedure"?	Yes	Go to appropriate inspection procedure
		No	Finished

AUTOMATIC TRANSAXLE BASIC INSPECTION [GF4A-EL]

W6U501W07

STEP	INSPECTION		ACTION
1	Turn ignition switch to ON Does O/D OFF indicator light (illuminate/go out) correspond to O/D OFF switch position (ON/OFF)?	Yes	Go to next step
		No	Perform malfunction diagnosis according to No.26 "O/D OFF INDICATOR LIGHT DOES NOT ILLUMINATE WHEN O/D OFF SWITCH IS TURNED ON", or No.27 "O/D OFF INDICATOR LIGHT ILLUMINATES WHEN O/D OFF SWITCH IS NOT TURNED ON"
2	Check the ATF color and condition ☞ 05–17B AUTOMATIC TRANSAXLE FLUID (ATF) INSPECTION [GF4A-EL] Are ATF color and odor normal?	Yes	Go to next step
		No	Repair or replace any defective parts
3	Perform the line pressure test ☞ 05–17B MECHANICAL SYSTEM TEST [GF4A-EL], Line Pressure Test Is line pressure okay?	Yes	Go to next step
		No	Repair or replace any defective parts
4	Perform the stall test ☞ 05–17B MECHANICAL SYSTEM TEST [GF4A-EL], Stall Test Is stall speed okay?	Yes	Go to next step
		No	Repair or replace any defective parts

STEP	INSPECTION		ACTION
5	Check the voltage at the following terminals of powertrain control module ☞ 01–40B POWERTRAIN CONTROL MODULE (PCM) INSPECTION [KL] • Throttle position sensor signal • Transaxle fluid temperature sensor signal • Vehicle speedometer sensor signal • Transaxle range switch signal (D, 2, 1 ranges and R position) Is terminal voltage okay?	Yes	Perform symptom troubleshooting
		No	Repair or replace any defective parts

AUTOMATIC TRANSAXLE SYMPTOM TROUBLESHOOTING [GF4A-EL]

W6U501W09

Diagnosis Index

- Use the chart below to verify the symptoms of the trouble in order to diagnose the appropriate area.

No.	TROUBLESHOOTING ITEM	DESCRIPTION
1	Vehicle does not move in D, 2, 1 ranges, or in R position	Vehicle does not move when accelerator pedal depressed.
2	Vehicle moves in N position	Vehicle creeps in N position. Vehicle creeps if brake pedal is not depressed in N position.
3	Vehicle moves in P position, or parking gear does not disengage when P disengaged	Vehicle rolls when on a downward slope and tires do not lock in P position. Tires are locked when P disengaged, vehicle does not move in D, 2, 1 ranges, and R position when accelerator pedal is depressed, and engine remains in stall condition.
4	Excessive creep	Vehicle accelerates in D, 2, 1 ranges, and R position without depressing accelerator pedal not depressed.
5	No creep at all	Vehicle does not move in D, 2, 1 ranges, or R position when idling on a flat paved road.
6	Low maximum speed and poor acceleration	Vehicle acceleration is poor at start. Delayed acceleration when accelerator is depressed while driving.
7	No shift	Single shift range only. Sometimes shifts correctly.
8	Does not shift to fourth gear	Vehicle does not upshift from 3GR to 4GR even though vehicle speed increased. Vehicle does not shift to 4GR even though accelerator pedal released D range at 60 km/h {37 mph}.
9	Abnormal shift	Shifts incorrectly (incorrect shift pattern).
10	Frequent shifting	Downshifting occurs immediately even when accelerator pedal is depressed slightly in D, 2, 1 ranges (O/D OFF switch OFF).
11	Shift point high or low	Shift point considerably different from automatic shift diagram. Shifts delayed when accelerating. Shifts occur quickly when accelerating and engine speed does not increase.
12	Torque converter clutch (TCC) non-operation	TCC does not operate when vehicle reaches TCC operation range.
13	No kickdown	Does not downshift when accelerator pedal is fully depressed when within kickdown range.
14	Engine flares up or slips when upshifting or downshifting	When accelerator pedal is depressed for driveaway, engine speed increases but vehicle speed increases slowly. When accelerator depressed while driving, engine speed increases but vehicle does not.
15	Engine flares up or slips when accelerating vehicle	Engine flares up when accelerator pedal is depressed for upshifting. Engine flares up suddenly when accelerator pedal is depressed for downshifting.

No.	TROUBLESHOOTING ITEM	DESCRIPTION
16	Judder upon torque converter clutch (TCC) operation	Vehicle jolts when TCC engaged.
17	Excessive N to D or N to R position/range shift shock	Strong shock felt when shifting from N to D or N to R position/range at idle.
18	Excessive shift shock when upshifting and downshifting	Excessive shift shock felt when depressing accelerator pedal to accelerate at upshifting. During cruising, excessive shift shock felt when depressing accelerator pedal at downshifting.
19	Excessive torque converter clutch (TCC) shift shock	Strong shock felt when TCC engaged.
20	Noise at idle when vehicle stopped in all positions/ranges	Transaxle noisy in all positions and ranges when vehicle is idling.
21	Noise at idle when vehicle stopped in D, 2, 1, ranges, and/or in R position	Transaxle noisy in driving ranges when vehicle is idling.
22	No engine braking in 1 range and 2 range (Second gear)	Engine speed drops to idle but vehicle coasts when accelerator pedal released during cruising at medium to high speeds. Engine speed drops to idle but vehicle coasts when accelerator pedal released when in 1 range at low vehicle speed.
23	Transaxle overheats	Burnt smell emitted from transaxle. Smoke from emitted from transaxle.
24	Engine stalls when shifted to D, 2, 1 ranges, and/or in R position	Engine stalls when shifting from N or P position D, 2, 1 ranges or R position at idle.
25	Engine stalls when driving at slow speeds or stopping	Engine stalls when brake pedal depressed while driving at low speeds or stopping.
26	O/D OFF indicator light does not illuminate when O/D OFF switch is turned ON	O/D OFF indicator light in dashboard does not illuminate when O/D OFF switch is turned on and ignition switch at ON.
27	O/D OFF indicator light illuminates when O/D OFF switch is not turned ON	O/D OFF indicator light in dashboard illuminates even though O/D OFF switch is turned OFF and ignition switch at ON.

Quick Diagnosis Chart

No.	Item	Selector lever misadjusted	Ignition system malfunction	Not within line pressure specification	Idle speed misadjusted	Ignition timing misadjusted	Transaxle range switch misadjusted	Throttle position sensor: Signal is not output	Throttle position sensor: Malfunction signal is output	Input/turbine speed sensor: Signal is not output	Input/turbine speed sensor: Malfunction signal is output	Transaxle range switch: D, 2, 1 ranges and R, N position signal is not output	O/D OFF switch: Signal is not output	O/D OFF switch: Malfunction signal is output	Brake switch: Signal is not input	Brake switch: Malfunction signal is output	Vehicle speedometer sensor: Signal is not input	Vehicle speedometer sensor: Malfunction signal is output	Poor ground
		Electrical system components																	
		ATX outer parts																	
1	Vehicle does not move in D, 2, 1 ranges, or in R position	○		○				○	○	○	○								○
2	Vehicle moves in N position	○		○				○	○	○	○								○
3	Vehicle moves in P position, or parking gear does not disengage when P disengaged	○																	
4	Excessive creep			○	○	○													
5	No creep at all	○		○				○	○	○	○								○
6	Low maximum speed and poor acceleration			○		○	○	○	○	○	○	○	○	○					○
7	No shift			○				○	○	○	○	○	○	○					○
8	Does not shift to fourth gear			○			○	○	○	○	○		○	○					○
9	Abnormal shift	○		○			○	○	○	○	○	○							○
10	Frequent shifting			○				○	○	○	○								○
11	Shift point high or low				○	○		○	○	○	○	○							○
12	Torque converter clutch (TCC) non-operation			○			○	○	○	○	○	○	○	○			○	○	○
13	No kickdown							○	○										○
14	Engine flares up or slips when upshifting or downshifting	○		○				○	○	○	○								○
15	Engine flares up or slips when accelerating vehicle	○		○				○	○	○	○								○
16	Judder upon torque converter clutch (TCC) operation			○		○		○	○	○	○					○			
17	Excessive N to D or N to R position/range shift shock			○	○			○	○	○	○	○							
18	Excessive shift shock when upshifting and downshifting			○				○	○	○	○	○							
19	Excessive torque converter clutch (TCC) shift shock			○				○	○	○	○								
20	Noise at idle when vehicle stopped in all positions/ranges							○	○										
21	Noise at idle when vehicle stopped in D, 2, 1, ranges, and/or in R position	○					○	○	○										
22	No engine braking in 1 range or 2 range (Second gear)	○		○			○	○	○	○	○								
23	Transaxle overheats			○															
24	Engine stalls when shifted to D, 2, 1 ranges, and/or in R position				○		○												
25	Engine stalls when driving at slow speeds or stopping				○		○												
26	O/D OFF indicator light does not illuminate when O/D OFF switch is turned ON												○	○					
27	O/D OFF indicator light illuminates when O/D OFF switch is not turned ON												○	○					

Symptom / Cause of trouble / Inspection method / Item

Item	Selector lever misadjusted	Ignition system malfunction	Not within line pressure specification	Idle speed misadjusted	Ignition timing misadjusted	Transaxle range switch misadjusted	Throttle position sensor: Signal is not output	Throttle position sensor: Malfunction signal is output	Input/turbine speed sensor: Signal is not output	Input/turbine speed sensor: Malfunction signal is output	Transaxle range switch: D, 2, 1 ranges and R, N position signal is not output	O/D OFF switch: Signal is not output	O/D OFF switch: Malfunction signal is output	Brake switch: Signal is not input	Brake switch: Malfunction signal is output	Vehicle speedometer sensor: Signal is not input	Vehicle speedometer sensor: Malfunction signal is output	Poor ground
Line pressure test																		
Stall test																		
Time lag test																		
Diagnostic trouble code							○		○		○	○		○		○		

W6U501WAK

Quick Diagnosis Chart (cont'd)

No.	Item	Signal is not output	Malfunction signal is output	Shift solenoid A (Open or short)	Shift solenoid B (Open or short)	Shift solenoid C (Open or short)	TCC control solenoid valve (Open or short)	3-2 timing solenoid valve (Open or short)	Pressure control solenoid valve (Open or short)	Control valve not operating properly	1-2 accumulator not operating properly	2-3 accumulator not operating properly	N-D accumulator not operating properly	N-R accumulator not operating properly	Oil cooler not operating properly	Slipping (Brake, clutch)	Burnt (Brake, clutch)	Torque converter not operating properly	TCC piston burnt
	Symptom / Cause of trouble / Inspection method	TFT sensor		ATX inner parts						Hydraulic system components						Powertrain system			
		Electrical system components																	
1	Vehicle does not move in D, 2, 1 ranges, or in R position			○	○	○			○	○						○	○	○	
2	Vehicle moves in N position			○	○	○			○	○							○		
3	Vehicle moves in P position, or parking gear does not disengage when P disengaged																○		
4	Excessive creep																		
5	No creep at all			○	○	○			○	○						○	○	○	
6	Low maximum speed and poor acceleration	○		○	○	○			○	○						○	○	○	
7	No shift			○	○	○			○	○						○	○		
8	Does not shift to fourth gear	○	○	○	○	○				○						○			
9	Abnormal shift			○	○	○			○	○						○	○		
10	Frequent shifting								○	○						○			
11	Shift point high or low																		
12	Torque converter clutch (TCC) non-operation	○	○				○			○						○		○	
13	No kickdown			○	○	○				○						○	○		
14	Engine flares up or slips when upshifting or downshifting			○	○	○			○	○						○			
15	Engine flares up or slips when accelerating vehicle			○	○	○			○	○						○			
16	Judder upon torque converter clutch (TCC) operation						○			○								○	○
17	Excessive N to D or N to R position/range shift shock								○	○			○	○		○	○		
18	Excessive shift shock when upshifting and downshifting			○	○	○		○	○	○	○					○	○		
19	Excessive torque converter clutch (TCC) shift shock						○			○									
20	Noise at idle when vehicle stopped in all positions/ranges			○	○	○			○									○	
21	Noise at idle when vehicle stopped in D, 2, 1, ranges, and/or in R position								○									○	
22	No engine braking in 1 range or 2 range (Second gear)					○				○						○			
23	Transaxle overheats	○	○				○		○						○		○		○
24	Engine stalls when shifted to D, 2, 1 ranges, and/or in R position						○			○									○
25	Engine stalls when driving at slow speeds or stopping						○			○									○
26	O/D OFF indicator light does not illuminate when O/D OFF switch is turned ON																		
27	O/D OFF indicator light illuminates when O/D OFF switch is not turned ON																		
	Line pressure test									○						○	○		
	Stall test									○						○	○	○	
	Time lag test												○	○		○	○		
	Diagnostic trouble code	○		○	○	○	○	○	○										

W6U501WAL

Symptom Troubleshooting

1	VEHICLE DOES NOT MOVE IN D, 2, 1 RANGES, OR IN R POSITION

TROUBLESHOOTING HINTS
If the vehicle does not move in D, 2, 1 ranges or R position, basically, the malfunction is in the automatic transaxle. (Vehicle will move even with a malfunction in the PCM.) Since a malfunction in the sensor circuit or output circuit is the cause of the malfunction in the automatic transaxle, inspect the sensors, output circuit, and the related harnesses.
① Clutch slippage, worn (D, 2, 1 ranges—Forward clutch, R position—Reverse clutch, Low and reverse brake)
- Line pressure low
- Malfunction of throttle position sensor (Disparity in setting sensor settings)
- Malfunction of vehicle speedometer sensor (Disparity in setting sensor settings)
- Malfunction of input/turbine speed sensor (Disparity in setting sensor settings)
- Malfunction of sensor ground (Disparity in setting sensor settings)
- Malfunction of shift solenoid A (Sticking)
- Malfunction of shift solenoid B (Sticking)
- Malfunction of shift solenoid C (Sticking)
- Malfunction of pressure control solenoid valve (Sticking)
- Malfunction of body ground
- Malfunction of manual valve (Poor operation, sticking)
- Malfunction of pressure regulator valve (Poor operation, sticking)
- Malfunction of pressure modifier valve (Poor operation, sticking)
- Malfunction of pilot valve (Poor operation, sticking)

② Malfunction of selector lever
③ Parking mechanism not properly operation

STEP	INSPECTION		ACTION
1	With vehicle stopped on a flat, paused road and engine off, does vehicle move when pushed? (in D, 2 ranges or N, R positions and brake released)	Yes	Go to next step
		No	Check for parking mechanism ☞ ATX workshop manual
2	Does vehicle move when selector lever is in between N position and D range?	Yes	Go to next step
		No	Inspect or adjust the selector lever ☞ 05–18 SELECTOR LEVER INSPECTION, ADJUSTMENT
3	Check the voltage at the following terminal of the powertrain control module ☞ 01–40B POWERTRAIN CONTROL MODULE (PCM) INSPECTION [KL] • Pressure control solenoid signal Is terminal voltage okay?	Yes	Go to next step
		No	Repair or replace any defective parts
4	Check duty of pressure control solenoid ☞ 05–17B SOLENOID VALVES INSPECTION [GF4A-EL], Pressure Control Solenoid Output Duty Inspection Is duty okay?	Yes	Overhaul control valve body and repair or replace any defective parts ☞ ATX workshop manual If problem remains, overhaul transaxle and repair or replace any defective parts ☞ ATX workshop manual
		No	Check the voltage at the following terminals of the powertrain control module ☞ 01–40B POWERTRAIN CONTROL MODULE (PCM) INSPECTION [KL] • Throttle position sensor signal • Ground (Engine, body) Repair or replace any defective parts

2	VEHICLE MOVES IN N POSITION

TROUBLESHOOTING HINTS

If the vehicle moves in N position, basically, the malfunction is in the automatic transaxle. Since a malfunction in the sensor circuit or output circuit is the cause of the malfunction in the automatic transaxle, inspect the sensors, output circuit, and the related harnesses.

① Clutch burned (Forward clutch, coasting clutch)
- Line pressure low
- Malfunction of throttle position sensor (Disparity in setting sensor settings)
- Malfunction of vehicle speedometer sensor (Disparity in setting sensor settings)
- Malfunction of input/turbine speed sensor (Disparity in setting sensor settings)
- Malfunction of sensor ground (Disparity in setting sensor settings)
- Malfunction of shift solenoid A (Sticking)
- Malfunction of shift solenoid B (Sticking)
- Malfunction of shift solenoid C (Sticking)
- Malfunction of pressure control solenoid valve (Sticking)
- Malfunction of body ground (Sticking)
- Malfunction of control valve body system

② Selector lever position disparity (Although the selector indicator light shows N position, the hydraulic circuit shows D range, R position)

STEP	INSPECTION		ACTION
1	Does vehicle creep when selector lever is moved slightly in N position?	Yes	Go to next step
		No	Adjust selector lever ☞ 05–18 SELECTOR LEVER ADJUSTMENT
2	Check the voltage at the following terminal of the powertrain control module ☞ 01–40B POWERTRAIN CONTROL MODULE (PCM) INSPECTION [KL] • Pressure control solenoid signal Is terminal voltage okay?	Yes	Go to next step
		No	Repair or replace any defective parts
3	Check duty of pressure control solenoid ☞ 05–17B SOLENOID VALVES INSPECTION [GF4A-EL], Pressure Control Solenoid Output Duty Inspection Is duty okay?	Yes	Overhaul control valve body and repair or replace any defective parts ☞ ATX workshop manual If problem remains, overhaul transaxle and repair or replace any defective parts ☞ ATX workshop manual
		No	Check the voltage at the following terminals of the powertrain control module ☞ 01–40B POWERTRAIN CONTROL MODULE (PCM) INSPECTION [KL] • Throttle position sensor signal • Ground (Engine, body) Repair or replace any defective parts

3	VEHICLE MOVES IN P POSITION, OR PARKING GEAR DOES NOT DISENGAGE WHEN P DISENGAGED

TROUBLESHOOTING HINTS

① Malfunction of parking mechanism (May have effect on noise or shock from transaxle)
② Poor adjustment of selector lever (Only if vehicle move when in P position or 1 range)
③ If vehicle moves in N position, perform No.2 "VEHICLE MOVES IN N POSITION"

4	EXCESSIVE CREEP

TROUBLESHOOTING HINTS

① Engine idle speed high (transaxle system is not cause of problem)
② Go to No.7 "Engine runs rough/rolling idle"
☞ 01–01B ENGINE SYMPTOM TROUBLESHOOTING [KL]

5	NO CREEP AT ALL

TROUBLESHOOTING HINTS

If the vehicle creeps only in 1 range, the fail-safe is operating. Otherwise, either the transaxle is stuck in third gear position, or there is clutch circuit slippage because the 3–4 clutch is stuck.

① Clutch burned
- Line pressure low
- Malfunction of throttle position sensor
- Malfunction of vehicle speedometer sensor
- Malfunction of input/turbine speed sensor
- Malfunction of sensor ground
- Malfunction of shift solenoid A (Sticking)
- Malfunction of shift solenoid B (Sticking)
- Malfunction of shift solenoid C (Sticking)
- Malfunction of prssure control solenoid valve (Sticking)
- Malfunction of body ground (Sticking)
- Malfunction of control valve body system

② Transaxle fixed in 3GR (Operation of fail-safe function)
- Short or open circuit in wiring
- Poor connection of connector
- The electronic parts of output and input system is malfunction

③ The engine torque is not start
- The torque converter is malfunction

STEP	INSPECTION		ACTION
1	Does vehicle creep in any range/position?	Yes	Go to next step
		No	Inspect or adjust selector lever ☞ 05–18 SELECTOR LEVER INSPECTION, ADJUSTMENT
2	Check the voltage at the following terminal of the powertrain control module ☞ 01–40B POWERTRAIN CONTROL MODULE (PCM) INSPECTION [KL] • Pressure control solenoid signal Is terminal voltage okay?	Yes	Go to next step
		No	Repair or replace any defective parts
3	Check duty of pressure control solenoid ☞ 05–17B SOLENOID VALVES INSPECTION [GF4A-EL], Pressure Control Solenoid Output Duty Inspection Is duty okay?	Yes	Overhaul control valve body and repair or replace any defective parts ☞ ATX workshop manual If problem remains, overhaul transaxle and repair or replace any defective parts ☞ ATX workshop manual
		No	Check the voltage at the following terminals of the powertrain control module ☞ 01–40B POWERTRAIN CONTROL MODULE (PCM) INSPECTION [KL] • Throttle position sensor signal • Ground (Engine, body) Repair or replace any defective parts

6	LOW MAXIMUM SPEED AND POOR ACCELERATION

TROUBLESHOOTING HINTS

If the clutch is stuck or does not stay in third or fourth gear, the malfunction is in the engine circuit.

① Clutch slippage, burned
- Line pressure low
- Malfunction of throttle position sensor
- Malfunction of vehicle speedometer sensor
- Malfunction of input/turbine speed sensor
- Malfunction of sensor ground
- Malfunction of shift solenoid A (Sticking)
- Malfunction of shift solenoid B (Sticking)
- Malfunction of shift solenoid C (Sticking)
- Malfunction of pressure control solenoid valve (Sticking)
- Malfunction of body ground (Sticking)
- Malfunction of control valve body system

② Transaxle fixed in 3GR (Operation of fail-safe function)
- Short or open circuit in wiring
- Poor connection of connector
- The electronic parts of output and input system is malfunction

③ Insufficient starting torque (Suspected when in-gear condition, shift control, and engine circuit are normal)
- The torque converter is malfunction (Poor operation, sticking)

④ Enlargement of TCC operation range (Operation of fail-safe function)
- Malfunction of TFT sensor (Short or open circuit)

STEP	INSPECTION		ACTION
1	With ignition switch at ON, does O/D OFF indicator light indication correspond to O/D OFF switch operation?	Yes	Go to next step
		No	Go to No.26 "O/D OFF INDICATOR LIGHT DOES NOT ILLUMINATE WHEN O/D OFF SWITCH IS TURNED ON", No.27 "O/D OFF INDICATOR LIGHT ILLUMINATES WHEN O/D OFF SWITCH IS NOT TURNED ON"
2	Go to No.13 "Poor fuel economy" ☞ 01–01B ENGINE SYMPTOM TROUBLESHOOTING [KL] Does CIS system okay?	Yes	Go to next step
		No	Repair or replace any defective parts
3	Disconnect solenoid connector Does vehicle operate as follows? **D range — 3GR (fixed)** **2 range — 2GR (fixed)** **1 range — 1GR (fixed)** **R position — Reverse**	Yes	Go to next step
		No	Overhaul control valve body and repair or replace any defective parts ☞ ATX workshop manual If problem remains, overhaul transaxle and repair or replace any defective parts ☞ ATX workshop manual
4	Drive vehicle in D, 2, and 1 ranges (O/D off switch OFF) does vehicle start from stop in first gear?	Yes	Go to next step
		No	Check the voltage at the following terminals of the powertrain control module ☞ 01–40B POWERTRAIN CONTROL MODULE (PCM) INSPECTION [KL] • Throttle position sensor signal • Vehicle speedometer sensor signal • Input/turbine speed sensor • D, 2, 1 range signals Repair or replace any defective parts
5	Check the voltage at the following terminals of the powertrain control module ☞ 01–40B POWERTRAIN CONTROL MODULE (PCM) INSPECTION [KL] • Shift solenoid A signal • Shift solenoid B signal • Shift solenoid C signal Are terminal voltages okay?	Yes	Go to next step
		No	Check the voltage at the following terminals of the powertrain control module ☞ 01–40B POWERTRAIN CONTROL MODULE (PCM) INSPECTION [KL] • Throttle position sensor signal • Input/turbine speed sensor • Vehicle speedometer sensor signal Repair or replace any defective parts
6	Perform the stall test ☞ 05–17B MECHANICAL SYSTEM TEST [GF4A-EL], Stall Test Is stall speed okay?	Yes	Reverify symptoms of malfunction
		No	Overhaul transaxle and repair or replace any defective parts ☞ ATX workshop manual

7	NO SHIFT

TROUBLESHOOTING HINTS
When the gear position is fixed in third gear due to the fail-safe operation, the malfunction is in the automatic transaxle.
Perform malfunction diagnosis according to No.6 "LOW MAXIMUM SPEED AND POOR ACCELERATION".
① Clutch burned
- Line pressure low
- Malfunction of throttle position sensor
- Malfunction of vehicle speedometer sensor
- Malfunction of input/turbine speed sensor
- Malfunction of sensor ground
- Malfunction of shift solenoid A (Sticking)
- Malfunction of shift solenoid B (Sticking)
- Malfunction of shift solenoid C (Sticking)
- Malfunction of pressure control solenoid valve (Sticking)
- Malfunction of body ground (Sticking)
- Malfunction of control valve body system (Poor operation, sticking)

② The 3GR is fixed (Operation in fail-safe function)
- Short or open circuit in wiring
- Poor connection of connector
- The electronic parts of output and input system is malfunction

8	DOES NOT SHIFT TO FOURTH GEAR

TROUBLESHOOTING HINTS
Although the malfunction is basically the same as No.7 "NO SHIFT", there are also other unique malfunctions.
① Operation in transaxle range switch fail-safe function (Judge of 2 range)
- Short or open circuit in wiring
- Poor connection of connector
- Malfunction of sensor
- Selector lever adjustment incorrect

② The 3GR is fixed (Operation in fail-safe function)
- Short or open circuit in wiring
- Poor connection of connector
- Malfunction of Input/output signal system

STEP	INSPECTION		ACTION
1	With indicator switch at ON, does O/D OFF indicator light indication correspond to O/D OFF switch operation?	Yes	Go to next step
		No	Go to No.26 "O/D OFF INDICATOR LIGHT DOES NOT ILLUMINATE WHEN O/D OFF SWITCH IS TURNED ON", No.27 "O/D OFF INDICATOR LIGHT ILLUMINATES WHEN O/D OFF SWITCH IS NOT TURNED ON"
2	Check the voltage at the following terminal of the powertrain control module ☞ 01–40B POWERTRAIN CONTROL MODULE (PCM) INSPECTION [KL] • TFT sensor signal Is terminal voltage okay?	Yes	Go to next step
		No	Repair or replace any defective parts
3	Check the voltage at the following terminals of the powertrain control module ☞ 01–40B POWERTRAIN CONTROL MODULE (PCM) INSPECTION [KL] • Shift solenoid A signal • Shift solenoid B signal • Shift solenoid C signal Are terminal voltages OK?	Yes	Overhaul control valve body and repair or replace any defective parts ☞ ATX workshop manual If problem remains, overhaul transaxle and repair or replace any defective parts ☞ ATX workshop manual
		No	Check the voltage at the following terminals of the powertrain control module ☞ 01–40B POWERTRAIN CONTROL MODULE (PCM) INSPECTION [KL] • D range signal • Input/turbine speed sensor signal • Ground (Engine, body) • Vehicle speedometer sensor signal Repair or replace any defective parts

9	ABNORMAL SHIFT

TROUBLESHOOTING HINTS
There is a malfunction in the signal circuit which controls shifting (throttle position sensor, input/turbine speed sensor, vehicle speedometer sensor), the control valve is stuck, or the clutch circuit is stuck.
① Clutch slippage, burned
- Line pressure low
- Malfunction of throttle position sensor
- Malfunction of vehicle speedometer sensor
- Malfunction of input/turbine speed sensor
- Malfunction of sensor ground
- Malfunction of shift solenoid A (Sticking)
- Malfunction of shift solenoid B (Sticking)
- Malfunction of shift solenoid C (Sticking)
- Malfunction of pressure control solenoid valve (Sticking)
- Malfunction of body ground (Sticking)
- Malfunction of control valve body system (Poor operation, sticking)

② Throttle position sensor malfunction (Not operating linearly)
③ Input/turbine speed sensor, vehicle speedometer sensor malfunction

STEP	INSPECTION		ACTION
1	Check the voltage between ground terminal of powertrain control module and transaxle case ☞ 01–40B POWERTRAIN CONTROL MODULE (PCM) INSPECTION [KL] Is voltage 0 V?	Yes	Go to next step
		No	Inspection ground circuit
2	Check the voltage at the following terminals of the powertrain control module ☞ 01–40B POWERTRAIN CONTROL MODULE (PCM) INSPECTION [KL] • Throttle position sensor signal • Input/turbine speed sensor signal • Vehicle speedometer sensor signal Is terminal voltage okay?	Yes	Overhaul control valve body and repair or replace any defective parts ☞ ATX workshop manual If problem remains, overhaul transaxle and repair or replace any defective parts ☞ ATX workshop manual
		No	Repair or replace any defective parts

10	FREQUENT SHIFTING

TROUBLESHOOTING HINTS
The circuit which is the cause is basically the same as for No.9 "ABNORMAL SHIFT". However, a malfunction of the input signal to the throttle position sensor, input/turbine speed sensor vehicle speedometer sensor (including the sensor ground, sensor harness, and connector), or clutch slippage (clutch stuck, low pressure in line) may also be the cause.

11	SHIFT POINT HIGH OR LOW

TROUBLESHOOTING HINTS
- If the transaxle does not abnormal shift, there is a malfunction of the input signal to the throttle position sensor, input/turbine speed sensor, or vehicle speedometer sensor.
- If the engine speed is high or low regardless that shifting is normal, inspect the tachometer.
- Verify that the output signal of the throttle sensor changes linearly.

12 TORQUE CONVERTER CLUTCH (TCC) NON-OPERATION

TROUBLESHOOTING HINTS
Basically, the TCC does not operate when the fail-safe is operating. Verify the diagnostic trouble code at first. If the TCC operates when driving at high speeds only, the malfunction (poor adjustment) is in the O/D OFF switch circuit or transaxle range switch circuit.

Caution
- **If the TCC or piston is stuck, inspect them. In addition, inspect the oil cooler for foreign particles which may have mixed in with the ATF.**

① TCC piston slippage, burned
- Line pressure low
- Malfunction of throttle position sensor
- Malfunction of engine coolant temperature sensor
- Malfunction of vehicle speedometer sensor
- Malfunction of input/turbine speed sensor
- Malfunction of sensor ground
- Malfunction of torque converter clutch control solenoid valve (Sticking)
- Malfunction of control valve body system (Poor operation, sticking)

② Malfunction of throttle position sensor (Not operating linear)
③ Malfunction of input/turbine speed sensor or vehicle speedometer sensor

STEP	INSPECTION		ACTION
1	With indicator switch at ON, does O/D OFF indicator light indication correspond to O/D OFF switch operation?	Yes	Go to next step
		No	Go to No.26 "O/D OFF INDICATOR LIGHT DOES NOT ILLUMINATE WHEN O/D OFF SWITCH IS TURNED ON", No.27 "O/D OFF INDICATOR LIGHT ILLUMINATES WHEN O/D OFF SWITCH IS NOT TURNED ON"
2	Check the voltage at the following terminal of the powertrain control module ☞ 01–40B POWERTRAIN CONTROL MODULE (PCM) INSPECTION [KL] • TCC control solenoid valve signal Is terminal voltage okay?	Yes	Go to next step
		No	Repair or replace any defective parts
3	Check the voltage at the following terminals of the powertrain control module ☞ 01–40B POWERTRAIN CONTROL MODULE (PCM) INSPECTION [KL] • Throttle position sensor signal • Vehicle speedometer sensor signal • NE signal • Ground (Engine, body) Are terminal voltage okay?	Yes	Replace powertrain control module ☞ 01–40B POWERTRAIN CONTROL MODULE (PCM) REMOVAL/INSTALLATION [KL]
		No	Repair or replace any defective parts

13 NO KICKDOWN

TROUBLESHOOTING HINTS
If the transaxle does not downshift though shifting is normal, the malfunction is in the throttle position sensor circuit (including the sensor ground, sensor harness, and connector).

14	ENGINE FLARES UP OR SLIPS WHEN UPSHIFTING OR DOWNSHIFTING

TROUBLESHOOTING HINTS
There is clutch slip because the clutch is stuck or the line pressure is low.
① Clutch stuck, slippage (forward clutch, 3–4 clutch, 2–4 brake band, one-way clutch 1, one-way clutch 2)
- Line pressure low
- Malfunction of throttle position sensor
- Malfunction of vehicle speedometer sensor
- Malfunction of input/turbine speed sensor
- Malfunction of sensor ground
- Malfunction of shift solenoid A (Sticking)
- Malfunction of shift solenoid B (Sticking)
- Malfunction of shift solenoid C (Sticking)
- Malfunction of pressure control solenoid valve (Sticking)
- Malfunction of body ground (Sticking)
- Malfunction of control valve body (Poor operation, sticking)

② Poor operating of mechanical pressure
- Selector lever position disparity
- Transaxle range switch position disparity

STEP	INSPECTION		ACTION
1	Is shift point okay?	Yes	Go to next step
		No	Go to No.9 "ABNORMAL SHIFT"
2	Check the voltage at the following terminal of the powertrain control module ☞ 01–40B POWERTRAIN CONTROL MODULE (PCM) INSPECTION [KL] • Pressure control solenoid signal Is terminal voltage okay?	Yes	Go to next step
		No	Repair or replace any defective parts
3	Check duty of pressure control solenoid ☞ 05–17B SOLENOID VALVES INSPECTION [GF4A-EL], Pressure Control Solenoid Output Duty Inspection Is duty okay?	Yes	Overhaul control valve body and repair or replace any defective parts ☞ ATX workshop manual If problem remains, overhaul transaxle and repair or replace any defective parts ☞ ATX workshop manual
		No	Check the voltage at the following terminals of the powertrian control module ☞ 01–40B POWERTRAIN CONTROL MODULE (PCM) INSPECTION [KL] • Throttle position sensor signal • Ground (Engine, body) Repair or replace any defective parts

15	ENGINE FLARES UP OR SLIPS WHEN ACCELERATING VEHICLE

TROUBLESHOOTING HINTS
The malfunction is basically the same as for No.14 "ENGINE FLARES UP OR SLIP WHEN UPSHIFTING OR DOWNSHIFTING". If conditions for No.14 worsen, the malfunction will develop into No.15.

16	JUDDER UPON TORQUE CONVERTER CLUTCH (TCC) OPERATION

TROUBLESHOOTING HINTS
Poor TCC engagement due to either slippage because the TCC piston is stuck or the line pressure is low.

Caution
- **If the TCC or piston are stuck, inspect them. In addition, inspect the oil cooler for foreign particles which may have mixed in with the ATF.**

① Torque converter clutch piston slippage, burned
- Line pressure low
- Malfunction of throttle position sensor
- Malfunction of vehicle speedometer sensor
- Malfunction of input/turbine speed sensor
- Malfunction of sensor ground
- Malfunction of torque converter clutch control solenoid valve (Sticking)
- Malfunction of control valve body system (Poor operation, sticking)

STEP	INSPECTION		ACTION
1	Check the voltage at the following terminal of the powertrain control module ☞ 01–40B POWERTRAIN CONTROL MODULE (PCM) INSPECTION [KL] • TCC control solenoid valve signal Is terminal voltage okay?	Yes	Go to next step
		No	Repair or replace any defective parts
2	Check the voltage at the following terminals of the powertrain control module ☞ 01–40B POWERTRAIN CONTROL MODULE (PCM) INSPECTION [KL] • Throttle position sensor signal • Vehicle speedometer sensor signal • Input/turbine speed sensor signal • Ground (Engine, body) Are terminal voltage okay?	Yes	Replace powertrain control module ☞ 01–40B POWERTRAIN CONTROL MODULE (PCM) REMOVAL/INSTALLATION [KL]
		No	Repair or replace any defective parts
3	Check the voltage at the following terminal of the powertrain control module ☞ 01–40B POWERTRAIN CONTROL MODULE (PCM) INSPECTION [KL] • Pressure control solenoid signal Is terminal voltage okay?	Yes	Go to next step
		No	Repair or replace any defective parts
4	Check duty of pressure control solenoid ☞ 05–17B SOLENOID VALVES INSPECTION [GF4A-EL], Pressure Control Solenoid Output Duty Inspection Is duty okay?	Yes	Overhaul control valve body and repair or replace any defective parts ☞ ATX workshop manual If problem remains, overhaul transaxle and repair or replace any defective parts ☞ ATX workshop manual
		No	Go to step 3

17	EXCESSIVE N TO D OR N TO R POSITION/RANGE SHIFT SHOCK		
TROUBLESHOOTING HINTS Shift shock may worsen when the fail-safe is operating. Verify the diagnostic trouble code at first. However, if no diagnostic trouble code is output, the shift shock may worsen due to poor operation of the control valve body or sticking of the clutch. ① Clutch burned (N→D: Forward clutch, N→R: Reverse clutch or low and reverse brake) • Line pressure low • Malfunction of throttle position sensor • Malfunction of TFT sensor • Malfunction of sensor ground • Malfunction of pressure control solenoid valve (Sticking) • Malfunction of pressure regulator valve (Poor operation, sticking) • Malfunction of pressure modifier valve (Poor operation, sticking) • Malfunction of pilot valve (Poor operation, sticking) ② Poor hydraulic operation (Malfunction in range change) ③ Idle speed high ④ Poor tightening torque of engine mount, exhaust mount			
STEP	**INSPECTION**		**ACTION**
1	Does shift shock occur only when engine cold?	Yes	Check the voltage at the following terminal of the powertrain control module ☞ 01–40B POWERTRAIN CONTROL MODULE (PCM) INSPECTION [KL] • Throttle position sensor signal • TFT sensor signal • Ground (Engine, body) Is terminal voltage okay?
		No	Go to next step
2	Perform the stall test ☞ 05–17B MECHANICAL SYSTEM TEST [GF4A-EL], Stall Test Is stall speed okay?	Yes	Go to next step
		No	Go to step 4
3	Check the voltage at the following terminals of the powertrain control module ☞ 01–40B POWERTRAIN CONTROL MODULE (PCM) INSPECTION [KL] • D range signal • Load/no load distinction signal Is terminal voltage okay?	Yes	Overhaul control valve body and repair or replace any defective parts ☞ ATX workshop manual If problem remains, overhaul transaxle and repair or replace any defective parts ☞ ATX workshop manual
		No	Repair or replace any defective parts
4	Check the voltage at the following terminal of the powertrain control module ☞ 01–40B POWERTRAIN CONTROL MODULE (PCM) INSPECTION [KL] • Pressure control solenoid signal Is terminal voltage okay?	Yes	Go to next step
		No	Repair or replace any defective parts
5	Check duty of pressure control solenoid ☞ 05–17B SOLENOID VALVES INSPECTION [GF4A-EL], Pressure Control Solenoid Output Duty Inspection Is duty okay?	Yes	Overhaul control valve body and repair or replace any defective parts ☞ ATX workshop manual If problem remains, overhaul transaxle and repair or replace any defective parts ☞ ATX workshop manual
		No	Check the voltage at the following terminals of the powertrain control module ☞ 01–40B POWERTRAIN CONTROL MODULE (PCM) INSPECTION [KL] • Throttle position sensor signal • Ground (Engine, body) Repair or replace any defective parts

18	EXCESSIVE SHIFT SHOCK WHEN UPSHIFTING AND DOWNSHIFTING

TROUBLESHOOTING HINTS
Shift shock may worsen when the fail-safe is operating. Verify the diagnostic trouble code at first. The shift shock has worsened if the throttle position sensor, input/turbine speed sensor, or vehicle speedometer sensor signal malfunctions.
① Clutch slippage, burned (2–4 brake band, 3–4 clutch)
- Line pressure low, high
- Malfunction of throttle position sensor
- Malfunction of vehicle speedometer sensor
- Malfunction of input/turbine speed sensor
- Malfunction of TFT sensor
- Malfunction of sensor ground
- Malfunction of shift solenoid A (Sticking)
- Malfunction of shift solenoid B (Sticking)
- Malfunction of shift solenoid C (Sticking)
- Malfunction of 3–2 timing solenoid valve (Sticking)
- Malfunction of pressure control solenoid valve (Sticking)
- Malfunction of body ground (Sticking)
- Malfunction of control valve body system (Poor operation, sticking)

STEP	INSPECTION		ACTION
1	Perform the stall test ☞ 05–17B MECHANICAL SYSTEM TEST [GF4A-EL], Stall Test Is stall speed okay?	Yes	Go to next step
		No	Repair or replace any defective parts
2	Check the voltage at the following terminal of the powertrain control module ☞ 01–40B POWERTRAIN CONTROL MODULE (PCM) INSPECTION [KL] • Pressure control solenoid signal Is terminal voltage okay?	Yes	Go to next step
		No	Repair or replace any defective parts
3	Check duty of pressure control solenoid ☞ 05–17B SOLENOID VALVES INSPECTION [GF4A-EL], Pressure Control Solenoid Output Duty Inspection Is duty okay?	Yes	Overhaul control valve body and repair or replace any defective parts ☞ ATX workshop manual If problem remains, overhaul transaxle and repair or replace any defective parts ☞ ATX workshop manual
		No	Check the voltage at the following terminals of the powertrain control module ☞ 01–40B POWERTRAIN CONTROL MODULE (PCM) INSPECTION [KL] • Throttle position sensor signal • Ground (Engine, body) Repair or replace any defective parts

19	EXCESSIVE TORQUE CONVERTER CLUTCH (TCC) SHIFT SHOCK

TROUBLESHOOTING HINTS
The troubleshooting flow is the same as for No.16 "JUDDER UPON TORQUE CONVERTER CLUTCH (TCC) OPERATION".

20	NOISE AT IDLE WHEN VEHICLE STOPPED IN ALL POSITIONS/RANGES		
TROUBLESHOOTING HINTS The malfunction is in the line pressure solenoid valve or oil pump which causes a high-pitched noise to be emitted from the transaxle at idle. **Note** • If a noise is emitted during shifting only, the malfunction is in shift solenoid A, B or C. If a noise is emitted during shifting at certain gears only or during deceleration only, it is gear noise.			
STEP	**INSPECTION**		**ACTION**
1	Does noise stop when solenoid connector is disconnected?	Yes	Go to next step
		No	Overhaul control valve body and repair or replace any defective parts ☞ ATX workshop manual If problem remains, overhaul transaxle and repair or replace any defective parts ☞ ATX workshop manual
2	Check the voltage at the following terminal of the powertrain control module ☞ 01–40B POWERTRAIN CONTROL MODULE (PCM) INSPECTION [KL] • Pressure control solenoid signal Is terminal voltage okay?	Yes	Go to next step
		No	Repair or replace any defective parts
3	Check duty of pressure control solenoid ☞ 05–17B SOLENOID VALVES INSPECTION [GF4A-EL], Pressure Control Solenoid Output Duty Inspection Is duty okay?	Yes	Overhaul control valve body and repair or replace any defective parts ☞ ATX workshop manual If problem remains, overhaul transaxle and repair or replace any defective parts ☞ ATX workshop manual
		No	Go to next step
4	Check the voltage at the following terminals of the powertrain control module ☞ 01–40B POWERTRAIN CONTROL MODULE (PCM) INSPECTION [KL] • Throttle position sensor signal • Vehicle speedometer sensor signal • Input/turbine speed sensor signal • Ground (Engine, body) Is terminal voltage okay?	Yes	Replace powertrain control module ☞ 01–40B POWERTRAIN CONTROL MODULE (PCM) REMOVAL/INSTALLATION [KL]
		No	Repair or replace any defective parts

21	NOISE AT IDLE WHEN VEHICLE STOPPED IN D, 2, 1, RANGES, AND/OR IN R POSITION
TROUBLESHOOTING HINTS Although the malfunction is basically the same as for No.20 "NOISE AT IDLE WHEN VEHICLE STOPPED IN ALL POSITIONS/RANGES", other causes may include selector lever position disparity or transaxle range switch position disparity.	

22	NO ENGINE BRAKING IN 1 RANGE AND 2 RANGE (SECOND GEAR)		
TROUBLESHOOTING HINTS ① Clutch slippage, burned (Coasting clutch, low and reverse brake) • Line pressure low • Malfunction of vehicle speedometer sensor • Malfunction of input/turbine speed sensor • Malfunction of sensor ground • Malfunction of shift solenoid C (Sticking) • Malfunction of control valve body system (Poor operation, sticking)			
STEP	**INSPECTION**		**ACTION**
1	Connect NGS tester to data link connector. Select TR PID. Turn the ignition switch ON. Verify TR PID reading is correct when selecting range	Yes	Go to next step
		No	• Check for transaxle range switch adjustment. ☞ 05–17B TRANSAXLE RANGE SWITCH ADJUSTMENT [GF4A-EL] • Check for transaxle range switch. Readjust or replace if necessary.
2	Do the following symptoms concurrently occur? • Engine flares up or slips during accelerating • Engine flares up or slips when shifting	Yes	Go to No.15 "ENGINE FLARES UP OR SLIPS WHEN ACCELERATING VEHICLE", No.14 "ENGINE FLARES UP OR SLIPS WHEN UPSHIFTING OR DOWNSHIFTING"
		No	Go to next step
3	Check the voltage at the following terminals of the powertrain control module ☞ 01–40B POWERTRAIN CONTROL MODULE (PCM) INSPECTION [KL] • Shift solenoid C signal • Input/turbine speed sensor signal • Vehicle speedometer sensor signal Is terminal voltage okay?	Yes	Overhaul control valve body and repair or replace any defective parts ☞ ATX workshop manual If problem remains, overhaul transaxle and repair or replace any defective parts ☞ ATX workshop manual
		No	Repair or replace any defective parts

23	TRANSAXLE OVERHEATS		
TROUBLESHOOTING HINTS The malfunction is restricted to hinderance of coolant at the oil cooler. In addition, overheating of the transaxle may be caused by a malfunction of the transaxle fluid temperature sensor. ① Line pressure low • ATF level ow • Malfunction of throttle position sensor • Malfunction of pressure control solenoid valve (Short, open, poor operation) ② Oil cooler circuit malfunction (Foreign material mixed in with ATF) ③ TFT sensor malfunction ④ Excessive amount of ATF			
STEP	**INSPECTION**		**ACTION**
1	Perform stall test ☞ 05–17B MECHANICAL SYSTEM TEST [GF4A-EL], Stall Test Is stall speed okay?	Yes	Go to next step
		No	Repair or replace any defective parts
2	Check the voltage at the following terminal of the powertrain control module ☞ 01–40B POWERTRAIN CONTROL MODULE (PCM) INSPECTION [KL] • Pressure control solenoid signal Is terminal voltage okay?	Yes	Go to next step
		No	Repair or replace any defective parts

STEP	INSPECTION		ACTION
3	Check duty of pressure control solenoid ☞ 05–17B SOLENOID VALVES INSPECTION [GF4A-EL], Pressure Control Solenoid Output Duty Inspection Is duty okay?	Yes	Overhaul control valve body and repair or replace any defective parts ☞ ATX workshop manual If problem remains, overhaul transaxle and repair or replace any defective parts ☞ ATX workshop manual
		No	Check the voltage at the following terminals of the powertrain control module ☞ 01–40B POWERTRAIN CONTROL MODULE (PCM) INSPECTION [KL] • Throttle position sensor signal • Ground (Engine, body) Repair or replace any defective parts

24	ENGINE STALLS WHEN SHIFTED TO D, 2, 1 RANGES, AND/OR IN R POSITION		
TROUBLESHOOTING HINTS The malfunction is on the engine control side (idle air control). Otherwise, the malfunction is in the input/turbine speed sensor (engine sometimes starts) or TCC piston circuit (engine always stalls).			
STEP	**INSPECTION**		**ACTION**
1	Go to No.4 "Engine stalls/at idle" ☞ 01–01B ENGINE SYMPTOM TROUBLESHOOTING [KL] Is EGI system okay?	Yes	Go to next step
		No	Repair or replace any defective parts
2	Check the voltage at the following terminal of the powertrain control module ☞ 01–40B POWERTRAIN CONTROL MODULE (PCM) INSPECTION [KL] • Load/no load distinction signal • R position, D, 2, 1 ranges signal • TCC control solenoid valve singal Is terminal voltage okay?	Yes	Go to next step
		No	Repair or replace any defective parts
3	Check duty of pressure control solenoid ☞ 05–17B SOLENOID VALVES INSPECTION [GF4A-EL], Pressure Control Solenoid Output Duty Inspection Is duty okay?	Yes	Overhaul control valve body and repair or replace any defective parts ☞ ATX workshop manual If problem remains, overhaul transaxle and repair or replace any defective parts ☞ ATX workshop manual
		No	Check the voltage at the following terminals of the powertrain control module ☞ 01–40B POWERTRAIN CONTROL MODULE (PCM) INSPECTION [KL] • Throttle position sensor signal • Vehicle speedometer sensor signal Repair or replace any defective parts

25	ENGINE STALLS WHEN DRIVING AT SLOW SPEEDS OR STOPPING		
TROUBLESHOOTING HINTS The malfunction is on the engine control side (fuel injection control, idle air control)			
STEP	**INSPECTION**		**ACTION**
1	Go to No.14 "Emissions compliance" ☞ 01–01B ENGINE SYMPTOM TROUBLESHOOTING [KL] Is EGI system okay?	Yes	Go to No.24 "ENGINE STALLS WHEN SHIFTED TO D, 2, 1, RANGES, AND/OR IN R POSITION"
		No	Repair or replace any defective parts

26	O/D OFF INDICATOR LIGHT DOES NOT ILLUMINATE WHEN O/D OFF SWITCH IS TURNED ON		
TROUBLESHOOTING HINTS The malfunction is in the O/D OFF switch			
STEP	**INSPECTION**		**ACTION**
1	Are other indicator lights illuminated with ignition switch at ON?	Yes	Inspect meter fuse
		No	Go to next step
2	Check the O/D OFF switch ☞ 05–17B O/D OFF SWITCH INSPECTION [GF4A-EL] Is O/D OFF switch okay?	Yes	Go to next step
		No	Repair or replace any detective parts
3	Check the voltage at the following terminal of the powertrain control module ☞ 01–40B POWERTRAIN CONTROL MODULE (PCM) INSPECTION [KL] • O/D OFF indicator light signal Is terminal voltage okay?	Yes	Go to next step
		No	Replace powertrain control module ☞ 01–40B POWERTRAIN CONTROL MODULE (PCM) REMOVAL/INSTALLATION [KL]
4	Check the O/D OFF indicator light Is O/D OFF indicator light okay?	Yes	Inspect for open circuit or disconnected connector in harness between the following • Ignition switch and O/D OFF indicator light • O/D OFF indicator light and PCM
		No	Repair or replace any defective parts

27	O/D OFF INDICATOR LIGHT ILLUMINATES WHEN O/D OFF SWITCH IS NOT TURNED ON		
TROUBLESHOOTING HINTS O/D OFF switch malfunction			
STEP	**INSPECTION**		**ACTION**
1	Check the O/D OFF switch ☞ 05–17B O/D OFF SWITCH INSPECTION [GF4A-EL] Is O/D OFF switch okay?	Yes	Go to next step
		No	Repair or replace any defective parts
2	Check the voltage at the following terminal of the powertrain control module ☞ 01–40B POWERTRAIN CONTROL MODULE (PCM) INSPECTION [KL] • O/D OFF indicator light signal Is terminal voltage okay?	Yes	Inspect for short circuit or disconnected connector in harness between the following • O/D OFF indicator light and PCM
		No	Replace powertrain control module ☞ 01–40B POWERTRAIN CONTROL MODULE (PCM) REMOVAL/INSTALLATION [KL]

05–10 CLUTCH

GENERAL PROCEDURES (CLUTCH) . 05–10–1
Clutch Pipe Removal/Installation 05–10–1
CLUTCH FLUID INSPECTION 05–10–1
CLUTCH FLUID REPLACEMENT 05–10–1
CLUTCH PEDAL ADJUSTMENT 05–10–2
Clutch Pedal Height 05–10–2
Clutch Pedal Free Play 05–10–2
CLUTCH PEDAL REMOVAL/INSTALLATION 05–10–3
Clutch Pedal Installation Note 05–10–3
CLUTCH MASTER CYLINDER REMOVAL/INSTALLATION 05–10–4
CLUTCH MASTER CYLINDER DISASSEMBLY/ASSEMBLY 05–10–5
Snap Ring Disassembly/Assembly Note . 05–10–5
CLUTCH RELEASE CYLINDER REMOVAL/INSTALLATION 05–10–6
CLUTCH RELEASE CYLINDER DISASSEMBLY/ASSEMBLY 05–10–6
CLUTCH UNIT REMOVAL/INSTALLATION 05–10–7
Clutch Cover and Disc Removal Note . 05–10–8
Pilot Bearing Removal Note 05–10–8
Flywheel Removal Note 05–10–8
Flywheel Installation Note 05–10–8
Pilot Bearing Installation Note 05–10–8
Clutch Disc Installation Note 05–10–8
Clutch Cover Installation Note 05–10–9
CLUTCH COVER INSPECTION 05–10–9
CLUTCH DISC INSPECTION 05–10–10
CLUTCH RELEASE COLLAR INSPECTION 05–10–10
PILOT BEARING INSPECTION 05–10–10
FLYWHEEL INSPECTION 05–10–11

GENERAL PROCEDURES (CLUTCH)

W6U510W01

Clutch Pipe Removal/Installation

1. If any clutch pipe has been disconnected any time during the procedure, add brake fluid, bleed the air, and inspect for leakage after the procedure has been completed.
2. If removing the clutch pipe, remove it by using the **SST** (49 0259 770B). If installing the clutch pipe, adjust the clutch pipe tightening torque to allow for the use of a torque wrench-**SST** (49 0259 770B) combination, and then tighten the clutch pipe by using the **SST** (49 0259 770B).

CLUTCH FLUID INSPECTION

W6U510W02

Note
- The fluid in the reservoir must be maintained between the MIN/MAX level during replacement.

CLUTCH FLUID REPLACEMENT

W6U510W03

Caution
- **Be careful not to spill clutch fluid on a painted surface. If this should happen, wash it off immediately.**
- **Do not mix different brands of clutch fluid.**
- **Do not reuse the clutch fluid that was drained out.**

1. Draw the fluid from the reservoir with a suction pump.
2. Remove the bleeder cap from the clutch release cylinder and attach a vinyl hose to the bleeder plug.
3. Place the other end of the vinyl hose into a container.
4. Slowly pump the clutch pedal several times.
5. With the clutch pedal depressed, loosen the bleeder screw by using the **SST** to let fluid escape. Close the bleeder screw by using the **SST**.

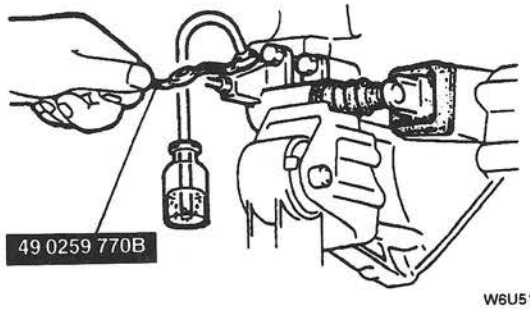

W6U510WA0

6. Repeat steps 4 and 5 until only clean fluid is seen.
7. Tighten the bleeder screw.

Tightening torque
5.9—8.8 N·m {60—90 kgf·cm, 53—78 ft·lbf}

8. Add fluid to the MAX mark.
9. Inspect for correct clutch operation.

CLUTCH PEDAL ADJUSTMENT

Clutch Pedal Height

1. Measure the distance from the upper surface of the pedal pad to the carpet.

   Pedal height
   194—202 mm {7.64—7.95 in} (with carpet)

2. As necessary, adjust the pedal height by turning adjustment bolt A and locknut B.

Clutch Pedal Free Play

1. Depress the clutch pedal by hand until clutch resistance is felt, and measure the pedal free play.

   Pedal free play
   1.0—3.0 mm {0.04—0.11 in}
   Total pedal free play
   5.0—14.0 mm {0.20—0.55 in}

W6U510W04

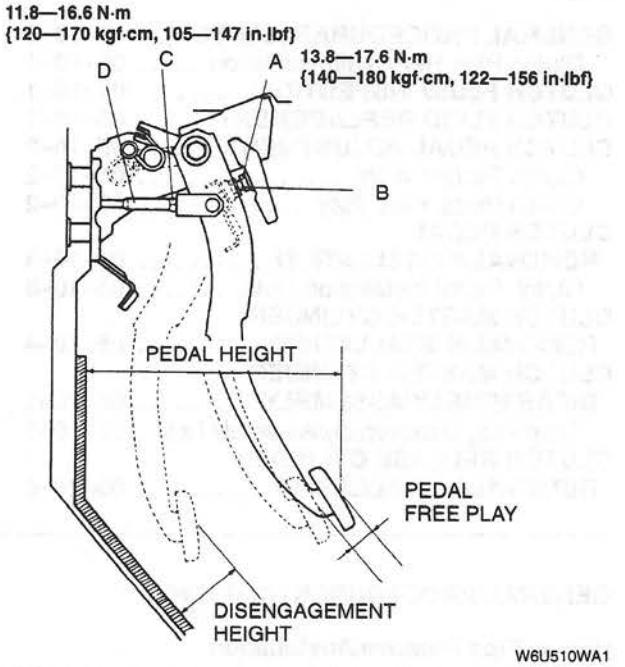

W6U510WA1

2. As necessary, adjust the pedal free play by turning locknut C and adjusting push rod D.
3. Verify that the disengagement height (from the upper surface of the pedal pad to the carpet) is correct when the pedal is fully depressed.

   Minimum disengagement height
   38 mm {1.50 in} (With carpet)

CLUTCH PEDAL REMOVAL/INSTALLATION

W6U510W05

1. Disconnect the negative battery cable.
2. Remove the lower panel.
3. Remove in the order indicated in the table.
4. Install in the reverse order of removal.

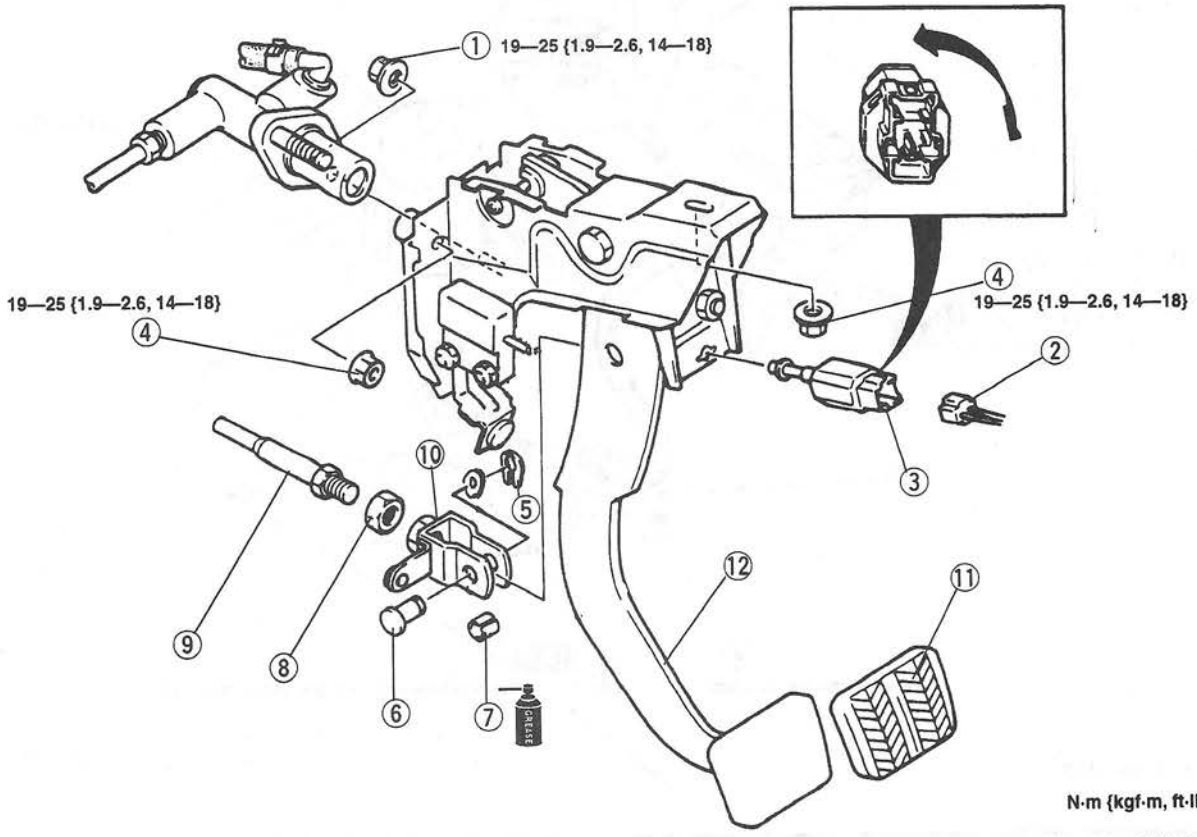

N·m {kgf·m, ft·lbf}

W6U510WA2

1	Nut
2	Clutch switch connector
3	Clutch switch
4	Nut
5	E clip
6	Pin
7	Bushing

8	Nut
9	Push rod
10	Clevis
11	Pedal pad
12	Clutch pedal ☞ Installation Note

Clutch Pedal Installation Note

- After installation, adjust the pedal height and free play. (Refer to 05–10 CLUTCH PEDAL ADJUSTMENT.)

CLUTCH MASTER CYLINDER REMOVAL/INSTALLATION

W6U510W06

1. Remove in the order indicated in the table.
2. Install in the reverse order of removal.

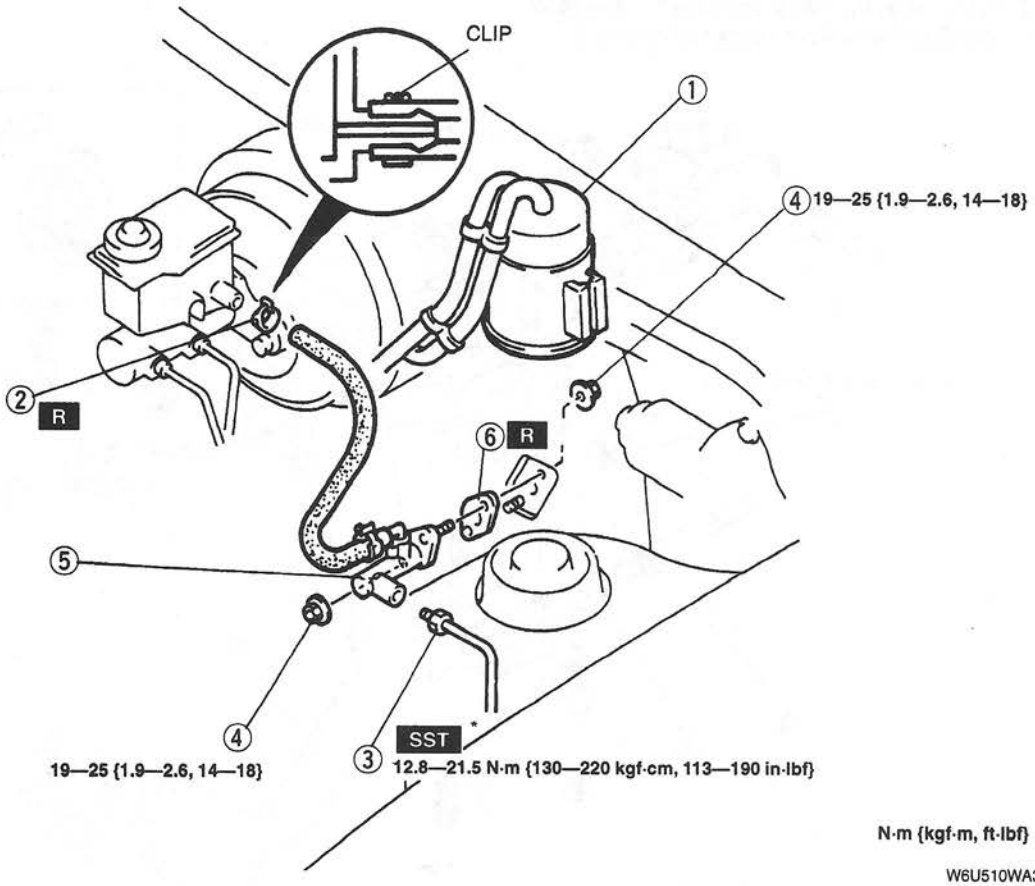

N·m {kgf·m, ft·lbf}

W6U510WA3

* 49 0259 770B

1	Charcoal canister
2	Clip
3	Clutch pipe

4	Nut
5	Clutch master cylinder
6	Gasket

CLUTCH MASTER CYLINDER DISASSEMBLY/ASSEMBLY

W6U510W07

1. Disassemble in the order indicated in the teble.
2. Assemble in the reverse order of disassembly.

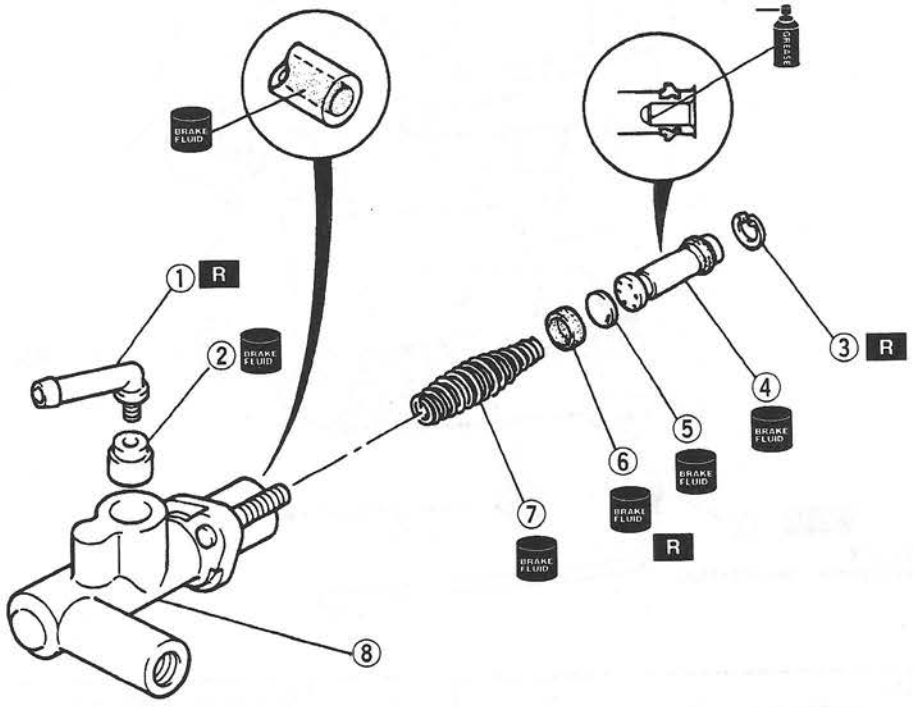

W6U510WA4

1	Joint
2	Bushing
3	Snap ring ☞ Disassembly/Assembly Note
4	Piston and secondary cap
5	Spacer
6	Primary cap
7	Return spring
8	Master cylinder body

Snap Ring Disassembly/Assembly Note

- Hold the piston down by using a cloth-wrapped pin punch. If disassembling, remove the snap ring; if assembling, install it.

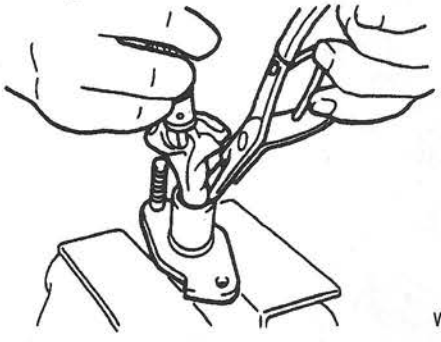

W6U510WA5

CLUTCH RELEASE CYLINDER REMOVAL/INSTALLATION

W6U510W08

1. Remove in the order indicated in the table.
2. Install in the reverse order of removal.

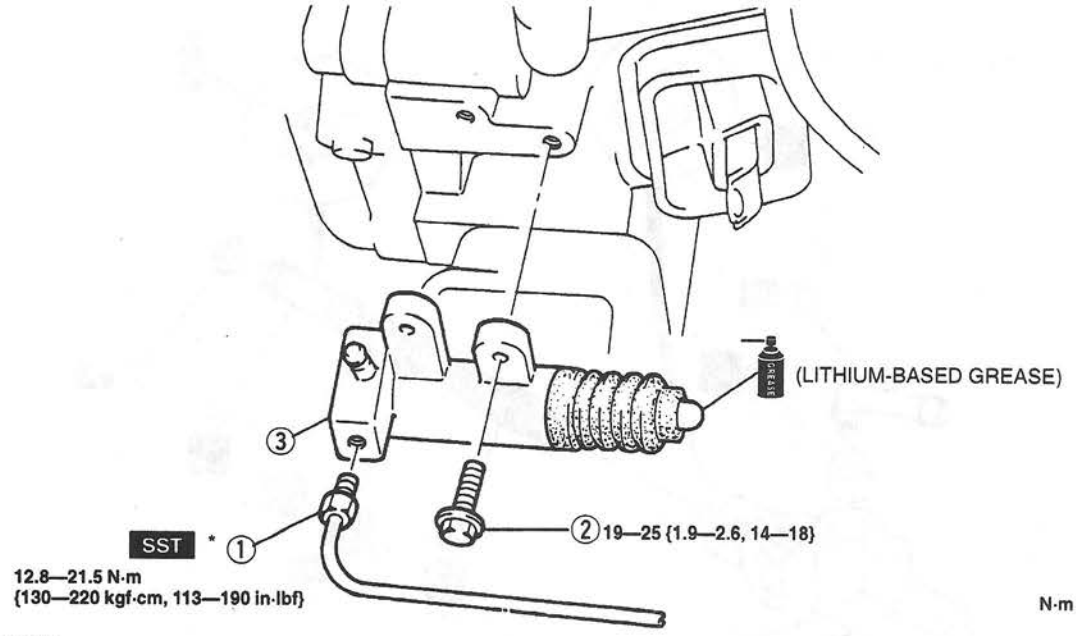

* 49 0259 770B

W6U510WA6

1	Clutch pipe
2	Bolt
3	Clutch release cylinder

CLUTCH RELEASE CYLINDER DISASSEMBLY/ASSEMBLY

W6U510W09

1. Disassemble in the order indicated in the table.
2. Assemble in the reverse order of disassembly.

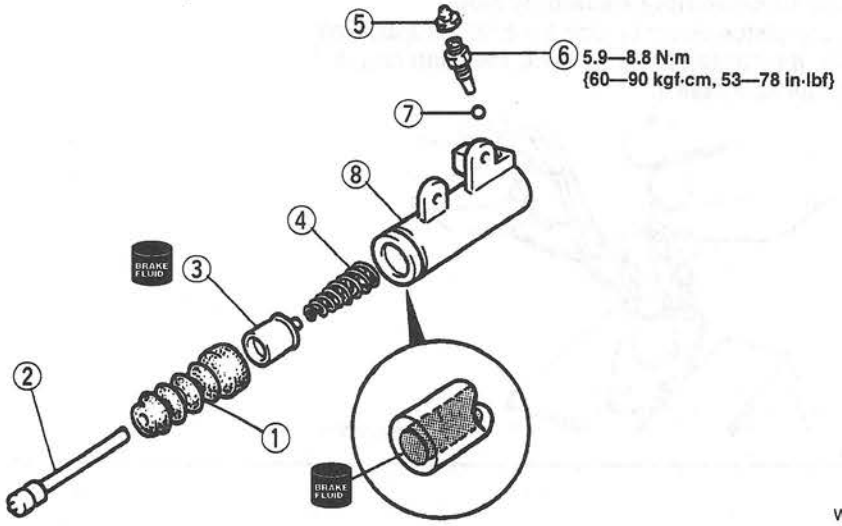

W6U510WA7

1	Boot
2	Push rod
3	Piston and cap
4	Return spring
5	Bleeder cap
6	Bleeder screw
7	Steel ball
8	Release cylinder body

CLUTCH UNIT REMOVAL/INSTALLATION

W6U510W10

1. Remove in the order indicated in the table.
2. Install in the reverse order of removal.

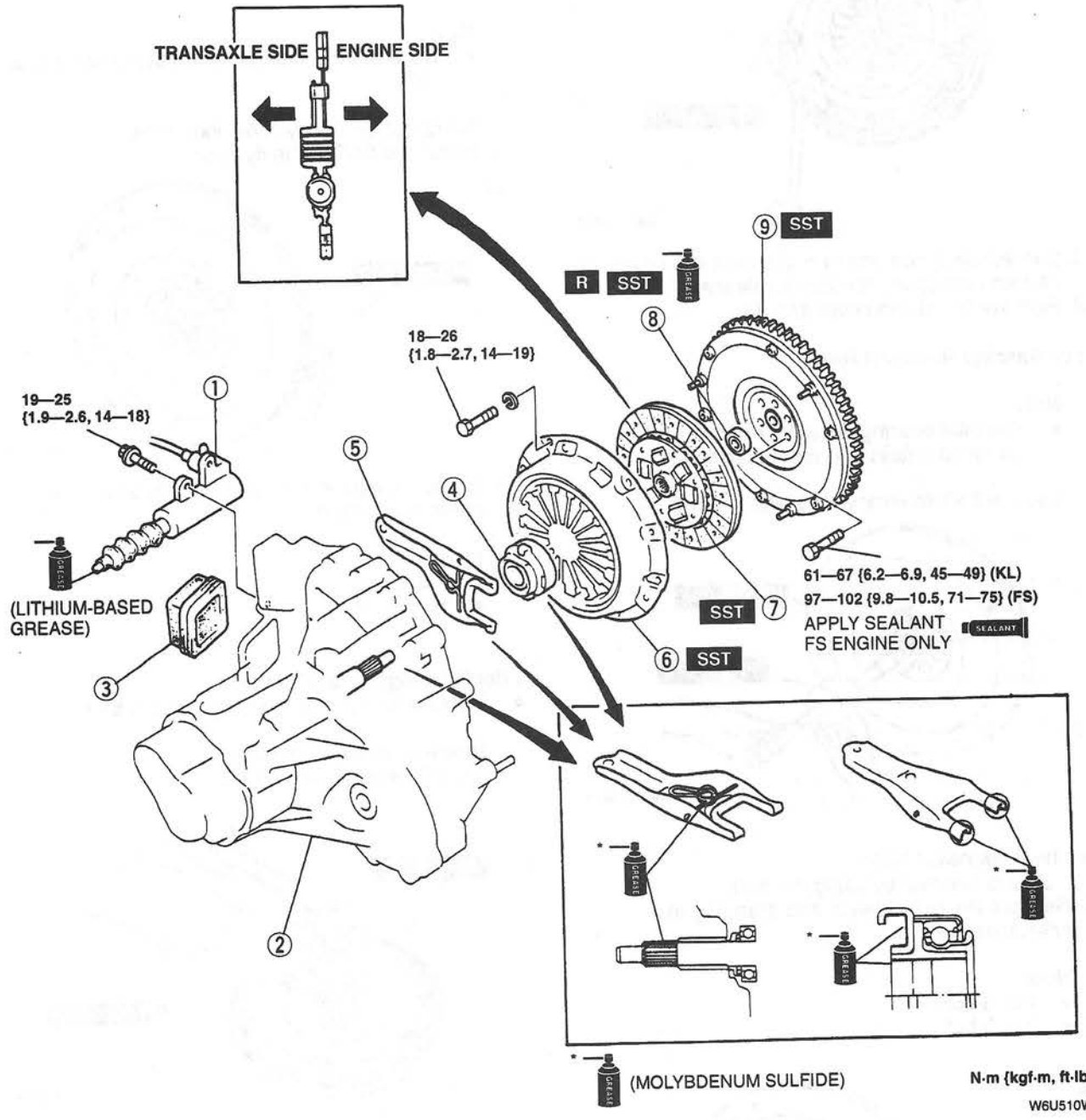

1	Clutch release cylinder
2	Manual transaxle ☞ 05–15 MANUAL TRANSAXLE REMOVAL/INSTALLATION
3	Boot
4	Clutch release collar
5	Clutch release fork
6	Clutch cover ☞ Removal Note ☞ Installation Note

7	Clutch disc ☞ Removal Note ☞ Installation Note
8	Pilot bearing ☞ Removal Note ☞ Installation Note
9	Flywheel ☞ Removal Note ☞ Installation Note

Clutch Cover and Disc Removal Note

1. Install the **SST**.

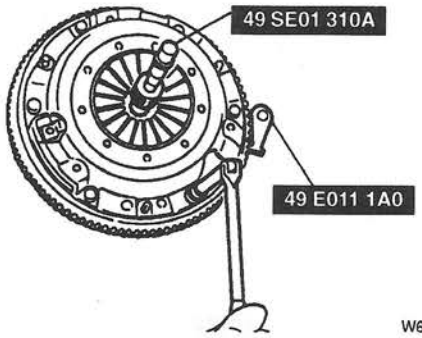

2. Loosen each bolt one turn at a time in a crisscross pattern until spring tension is released.
3. Remove the clutch cover and disc.

Pilot Bearing Removal Note

Note

- The pilot bearing does not need to be removed unless you are replacing it.

- Use the **SST** to remove the pilot bearing.

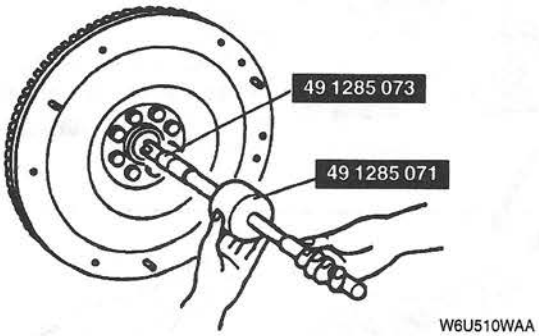

Flywheel Removal Note

1. Hold the flywheel by using the **SST**.
2. Remove the bolts evenly and gradually in a crisscross pattern.

Note

- FS: 6 bolt
- KL: 8 bolt

KL

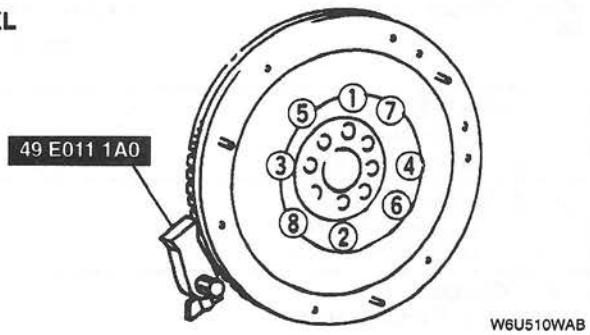

3. Remove the flywheel.

Flywheel Installation Note

1. Install the flywheel to the crankshaft.
2. When reusing the bolts, clean and apply sealant to the threads. (FS)

Note

- No sealant is needed when using new bolts. (FS)

3. Hand-tighten the flywheel lock bolts.
4. Install the **SST** to the flywheel.

KL

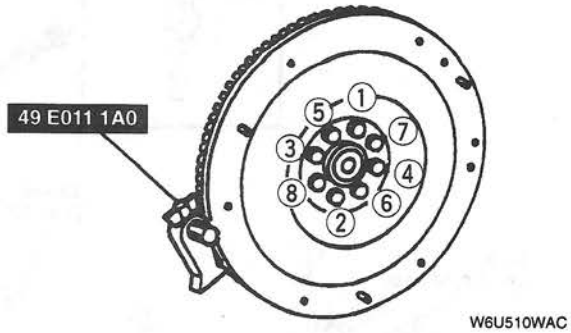

5. Gradually tighten the flywheel lock bolts in a crisscross pattern.

Note

- FS: 6 bolt
- KL: 8 bolt

Pilot Bearing Installation Note

- Install a new pilot bearing by using a **SST**.

Bearing installation depth
0—0.4 mm {0—0.015 in}

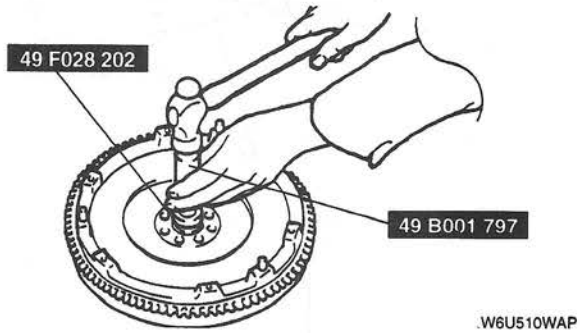

Clutch Disc Installation Note

- Hold the clutch disc position by using the **SST**.

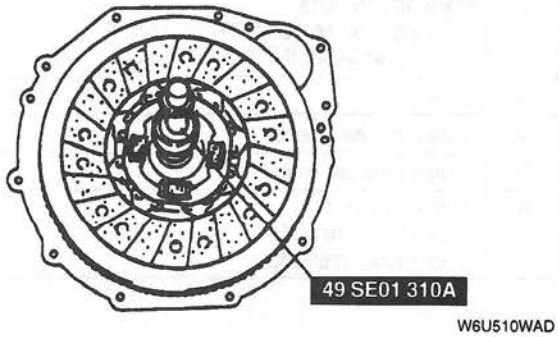

Clutch Cover Installation Note

1. Install the **SSTs**.
2. Tighten the bolts evenly and gradually in a crisscross pattern.

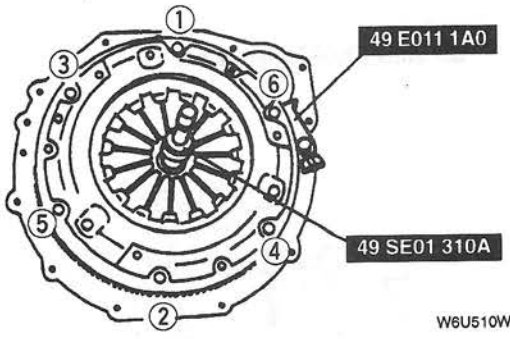

W6U510WAE

CLUTCH COVER INSPECTION

W6U510W11

1. Measure the wear of the diaphragm spring fingers.

   Depth
   0.6 mm {0.0236 in} max.

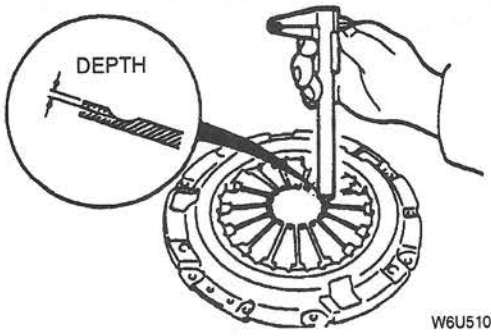

W6U510WAF

2. Measure the flatness of the pressure plate by using a straight edge and a feeler gauge.

   Maximum clearance
   0.5 mm {0.020 in}

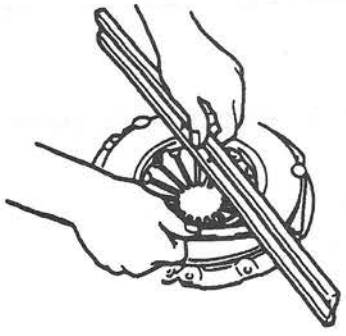

W6U510WAG

3. When checking the diaphragm spring fingers, mount a dial indicator on the cylinder block.
4. Rotate the flywheel and check for misaligned diaphragm spring fingers.

   Misalignment
   0.6 mm {0.0236 in} max.

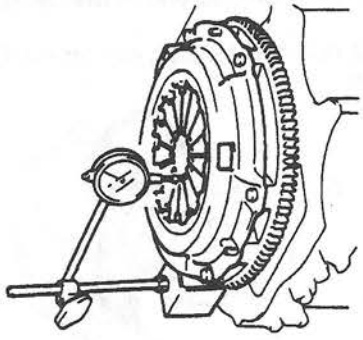

W6U510WAH

5. Replace the clutch cover if not as specified.

CLUTCH DISC INSPECTION

W6U510W12

1. Using vernier calipers, measure the thickness of the lining at a rivet head on both sides. Replace the clutch disc if its thickness is less than the minimum.

Thickness
0.3 mm {0.012 in} min.

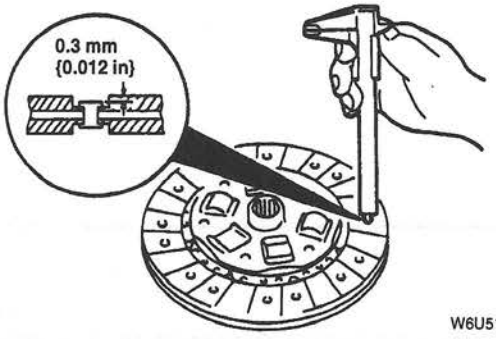

W6U510WAJ

2. Measure the clutch disc runout by using a dial indicator. Replace the clutch disc if runout is excessive.

Runout
0.7 mm {0.0276 in} max.

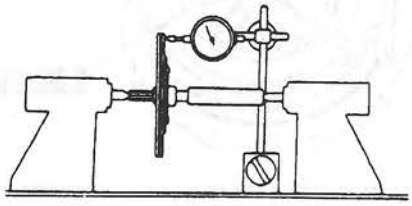

W6U510WAK

CLUTCH RELEASE COLLAR INSPECTION

W6U510W13

Caution
- **Cleaning the clutch release collar with cleaning fluids or a steam cleaner can wash the grease out of the sealed bearing.**

1. Turn the collar while applying force in the axial direction.

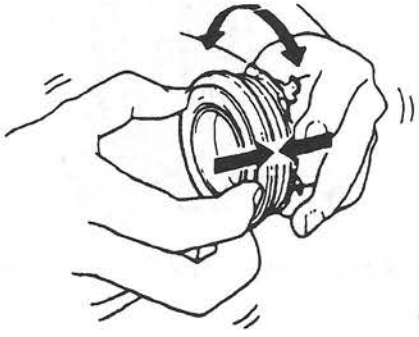

W6U510WAL

2. If the collar sticks or has excessive resistance, replace it.

PILOT BEARING INSPECTION

W6U510W14

1. Without removing the pilot bearing from the flywheel, turn the bearing while applying force in the axial direction.

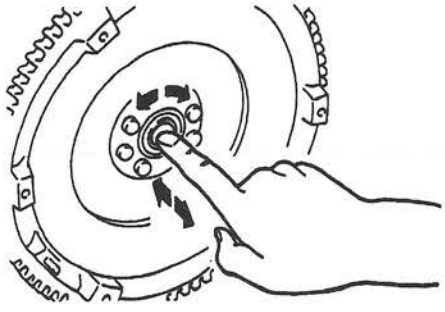

W6U510WAM

2. If the bearing sticks or has excessive resistance, replace it.

FLYWHEEL INSPECTION

W6U510W15

1. Install a dial gauge on the cylinder block.
2. Measure the flywheel runout by using a dial indicator. Replace the flywheel if runout is excessive.

Runout
0.2 mm {0.008 in} max.

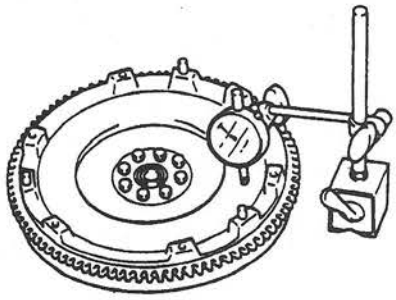

W6U510WAN

05–15 MANUAL TRANSAXLE

TRANSAXLE OIL INSPECTION 05–15–1
TRANSAXLE OIL REPLACEMENT 05–15–1
OIL SEAL (DIFFERENTIAL) REPLACEMENT 05–15–2
VEHICLE SPEEDOMETER SENSOR INSPECTION 05–15–2
VEHICLE SPEEDOMETER SENSOR REMOVAL/INSTALLATION 05–15–2
MANUAL TRANSAXLE REMOVAL/INSTALLATION 05–15–3
Engine Mount Member Removal Note 05–15–6
Transaxle Removal Note 05–15–6
Transaxle Installation Note 05–15–6
No.2 Engine Mount, Engine Mount Member Installation Note 05–15–6

TRANSAXLE OIL INSPECTION

W6U515W01

1. Park the vehicle on level ground.
2. Remove the oil level plug and washer.
3. Verify that the oil is near the bottom of the plug port.

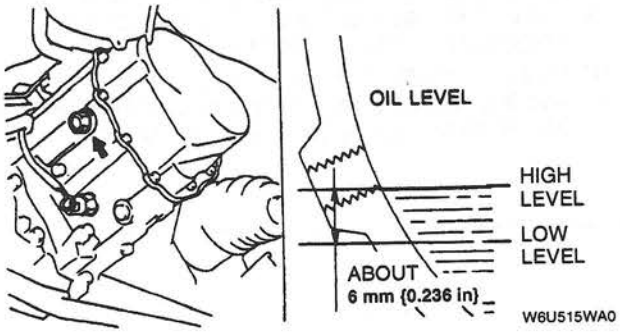

W6U515WA0

4. If the oil level is lower than the low level, add the specified amount and type of oil through the oil level plug hole.

Specified oil grade
API Service GL-4 or GL-5
Specified oil viscosity
All-season: SAE 75W–90
Above 10 °C {50 °F}: SAE 80W–90

5. Install a new washer and the oil level plug.

Tightening torque
40—58 N·m {4.0—6.0 kgf·m, 29—43 ft·lbf}

TRANSAXLE OIL REPLACEMENT

W6U515W02

1. Remove the drain plug and washer.
2. Drain the oil into a suitable container.
3. Install a new washer and the drain plug.

Tightening torque
40—58 N·m {4.0—6.0 kgf·m, 29—43 ft·lbf}

4. Remove the oil level plug with washer and add the specified amount and type of oil through the oil level plug hole until the level reaches the bottom of the oil level plug hole.

Specified oil grade
API Service GL-4 or GL-5
Specified oil viscosity
All-season: SAE 75W–90
Above 10 °C {50 °F}: SAE 80W–90
Capacity
2.7 L {2.9 US qt, 2.4 Imp qt}

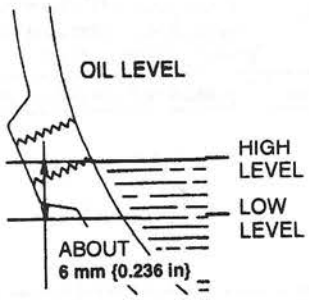

W6U515WA1

5. Install a new washer and the oil level plug.

Tightening torque
40—58 N·m {4.0—6.0 kgf·m, 29—43 ft·lbf}

OIL SEAL (DIFFERENTIAL) REPLACEMENT

W6U515W03

1. On level ground, jack up the vehicle and support it evenly on safety stands.
2. Drain the oil from the transaxle.
3. Remove the front wheels and splash shields.
4. Separate the drive shaft and joint shaft from the transaxle. (Refer to 03–13 DRIVE SHAFT REMOVAL/INSTALLATION.) (Refer to 03–13 JOINT SHAFT REMOVAL/INSTALLATION.)
5. Remove the oil seals by using a screwdriver.

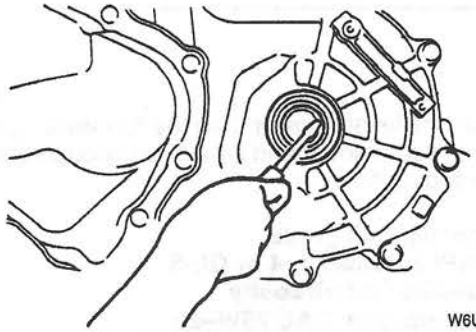

W6U515WA2

6. Using the **SST** and a hammer, tap each new oil seal in evenly until the **SST** contacts the transaxle case.

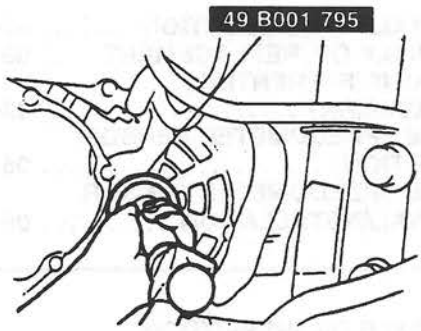

W6U515WA3

7. Coat the lip of each oil seal with transaxle oil.
8. Insert the drive shaft and joint shaft to the transaxle. (Refer to 03–13 DRIVE SHAFT REMOVAL/INSTALLATION.) (Refer to 03–13 JOINT SHAFT REMOVAL/INSTALLATION.)
9. Install the wheels and tires. (Refer to 02–10 PRECAUTION (SUSPENSION).)
10. Install the splash shields.
11. Add the specified amount and type of oil. (Refer to 05–15 TRANSAXLE OIL REPLACEMENT.)

VEHICLE SPEEDOMETER SENSOR INSPECTION

W6U515W04

1. Remove the vehicle speedometer sensor.
2. Measure voltage between terminals of the vehicle speedometer sensor while the gear is turning.

Meter needle	Action
Moves slightly under 5 V	Inspect wiring harness between instrument cluster and vehicle speedometer sensor.
Does not move	Replace vehicle speedometer sensor.

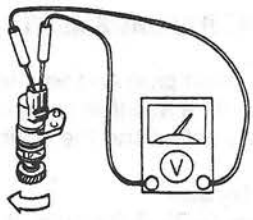

W6U515WA4

3. Install the vehicle speedometer sensor. (Refer to 05–15 VEHICLE SPEEDOMETER SENSOR REMOVAL/INSTALLATION.)

VEHICLE SPEEDOMETER SENSOR REMOVAL/INSTALLATION

W6U515W05

1. Disconnect the negative battery cable.
2. Remove the air cleaner component, battery and battery carrier.
3. Disconnect the vehicle speedometer sensor connector.
4. Remove the vehicle speedometer sensor.
5. Apply transaxle oil to a new O-ring and install it on a new vehicle speedometer sensor.
6. Install the vehicle speedometer sensor.

Tightening torque
7.9—11.2 N·m
{80—115 kgf·cm, 69.5—99.8 in·lbf}

7. Connect the vehicle speedometer sensor connector.
8. Install the battery, battery carrier and air cleaner component.
9. Connect the negative battery cable.

MANUAL TRANSAXLE REMOVAL/INSTALLATION

W6U515W06

1. Remove the battery, battery cover, and battery tray.
2. Remove the fresh air duct and air cleaner component.
3. Remove the wheels and tires. (Refer to 02–10 PRECAUTION (SUSPENSION).)
4. Remove the splash shields.
5. Drain the transaxle oil into a container.
6. Remove the starter for FS engine. (Refer to 01–19 STARTER REMOVAL/INSTALLATION.)
7. Remove in the order indicated in the table.
8. Install in the reverse order of removal.
9. Add the specified amount of the specified transaxle oil. (Refer to 05–15 TRANSAXLE OIL REPLACEMENT.)
10. Warm up the engine and transaxle, inspect for the oil leakage, and inspect the transaxle operation.

FS ENGINE

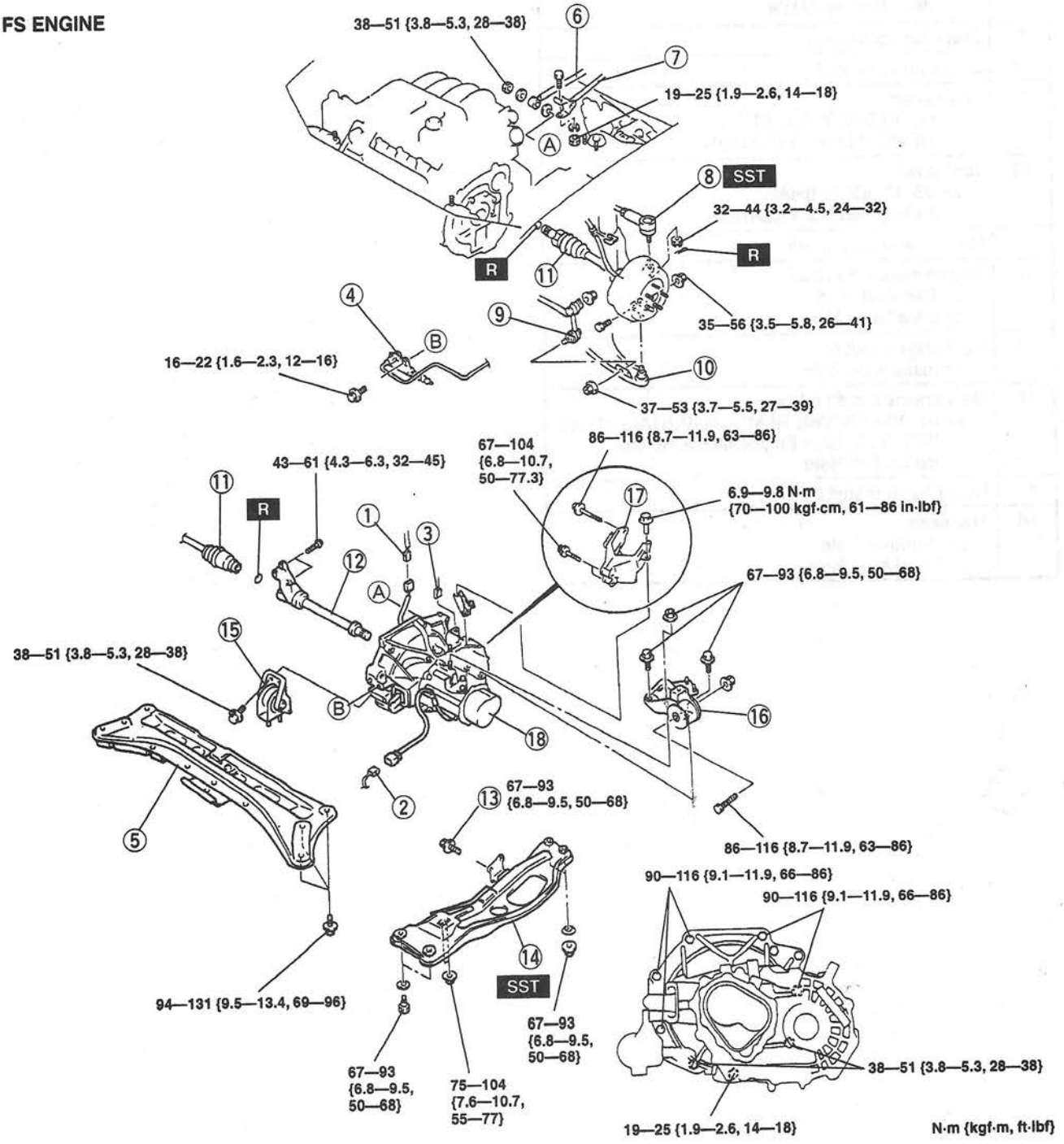

W6U515WA5

1	Neutral switch connector
2	Back-up light switch connector
3	Speedometer sensor connector
4	Clutch release cylinder
5	Transverse member
6	Extension bar
7	Change control rod
8	Tie-rod end ball joint ☞ 06–12 STEERING GEAR AND LINKAGE REMOVAL/INSTALLATION, Tie-rod End Ball Joint Removal Note
9	Stabilizer control link
10	Lower arm ball joint
11	Drive shaft ☞ 03–13 DRIVE SHAFT REMOVAL/INSTALLATION
12	Joint shaft ☞ 03–13 JOINT SHAFT REMOVAL/INSTALLATION
13	No.5 engine mount bolt
14	Engine mount member ☞ Removal Note ☞ Installation Note
15	No.2 engine mount ☞ Installation Note
16	No.4 engine mount rubber ☞ 01–10A ENGINE REMOVAL/INSTALLATION [FS], No.3, No.4 Engine Mount Rubber Installation Note
17	No.1 engine mount bracket
18	Transaxle ☞ Removal Note ☞ Installation Note

KL ENGINE

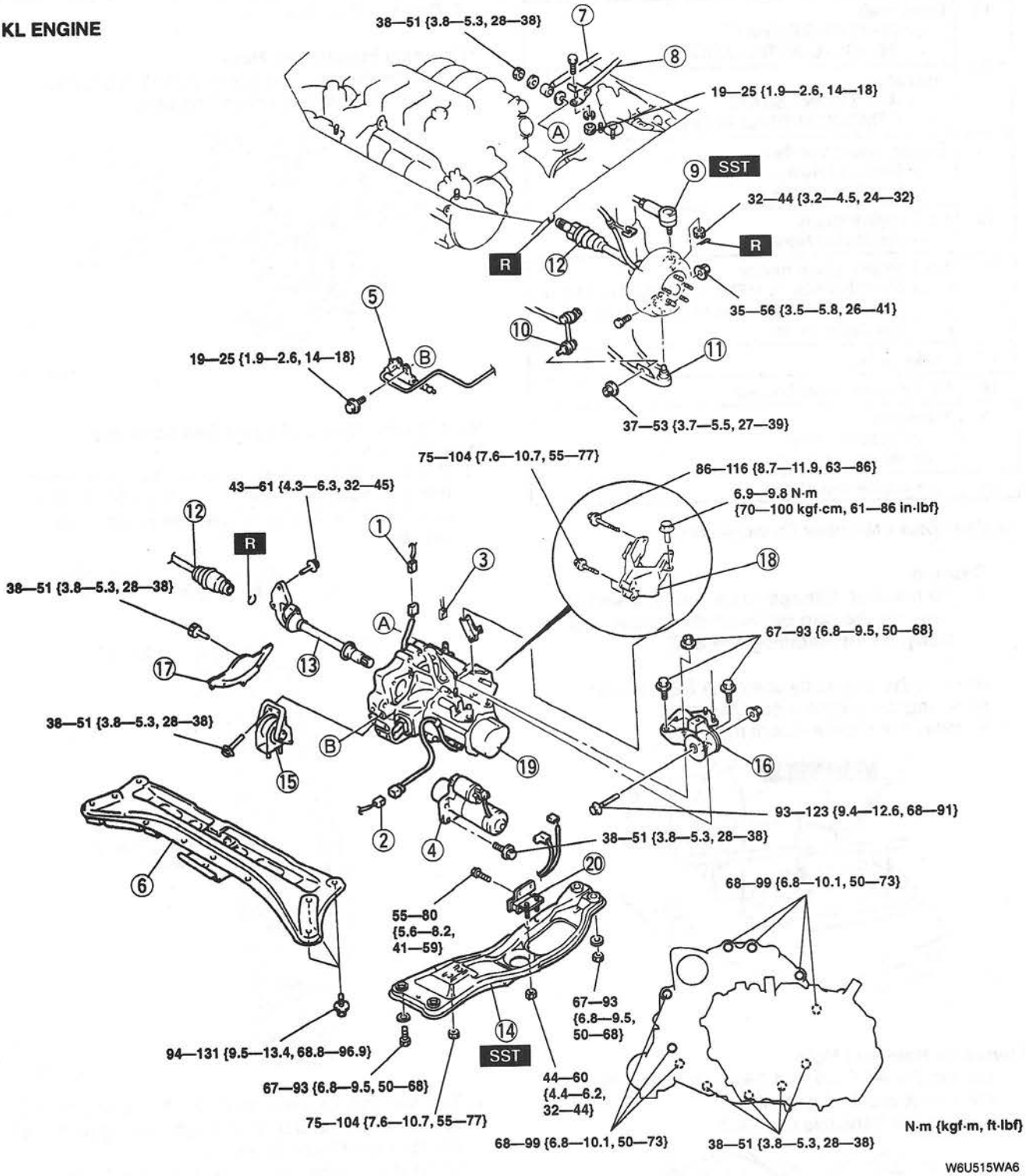

1	Neutral switch connector
2	Back-up light switch connector
3	Speedometer sensor connector
4	Starter ☞ 01–19 STARTER REMOVAL/INSTALLATION
5	Clutch release cylinder
6	Transverse member

7	Extension bar
8	Change control rod
9	Tie-rod end ball joint ☞ 06–12 STEERING GEAR AND LINKAGE REMOVAL/INSTALLATION, Tie-rod End Ball Joint Removal Note
10	Stabilizer control link
11	Lower arm ball joint

12	Drive shaft ☞ 03–13 DRIVE SHAFT REMOVAL/INSTALLATION
13	Joint shaft ☞ 03–13 JOINT SHAFT REMOVAL/INSTALLATION
14	Engine mount member ☞ Removal Note ☞ Installation Note
15	No.2 engine mount ☞ Installation Note
16	No.4 engine mount rubber ☞ 01–10B ENGINE REMOVAL/INSTALLATION [KL], No.3, No.4 Engine Mount Rubber Installation Note
17	Under cover
18	No.1 engine mount bracket
19	Transaxle ☞ Removal Note ☞ Installation Note
20	No.5 engine mount

Engine Mount Member Removal Note

Caution
- **To prevent damage to the body, insert a rag into the gap between the fender and body, when installing the SST.**

1. Support the engine by using the **SST** before removing the engine mount member.
2. Remove the engine mount member.

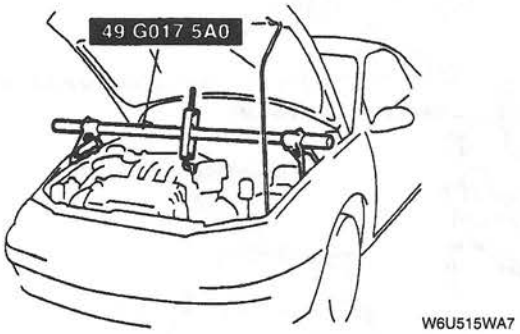

W6U515WA7

Transaxle Removal Note
1. Loosen the **SST** (49 G017 5A0) and lean the engine toward the transaxle.
2. Support the transaxle on a jack.

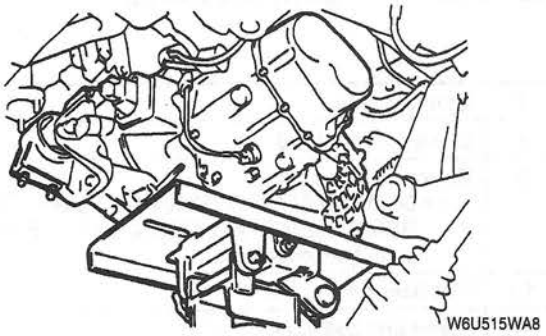
W6U515WA8

3. Remove the transaxle mounting bolts.
4. Remove the transaxle.

Transaxle Installation Note
1. Set the transaxle on a jack and lift into place.
2. Install the transaxle mounting bolts.

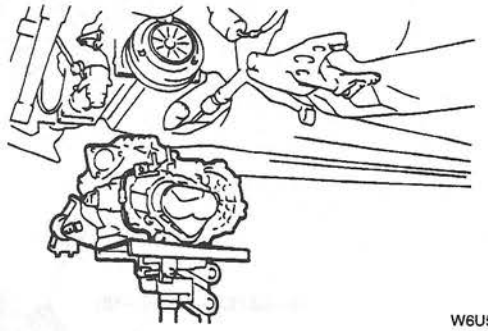
W6U515WA9

No.2 Engine Mount, Engine Mount Member Installation Note
1. Position the direction indicator on engine mount member bushings facing toward the front side, and install the bushings onto the engine mount member.

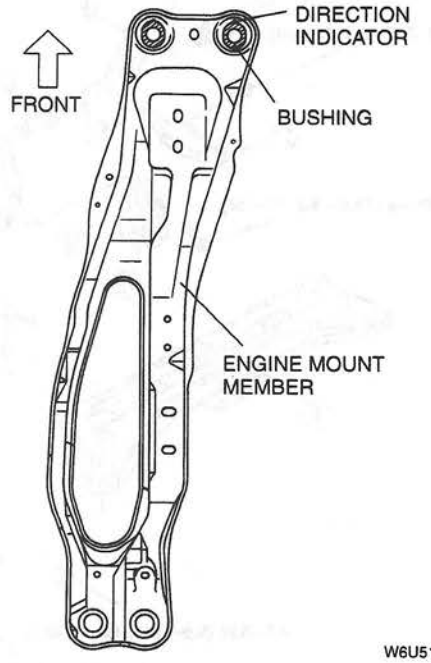

W6U515WAB

2. To install the engine mount member, put the No.2 engine mount stud bolts through the engine mount member installation holes.
3. Install the engine mount member bolts A and nuts A.

Tightening torque
A: 67—93 N·m {6.8—9.5 kgf·m, 50—68 ft·lbf}

4. Loosely tighten the No.2 engine mount nuts B.
5. Remove the **SST** (49 G017 5A0).
6. Tighten the No.2 engine mount nuts B.

Tightening torque
B: 75—104 N·m
{7.6—10.7 kgf·m, 55—77 ft·lbf}

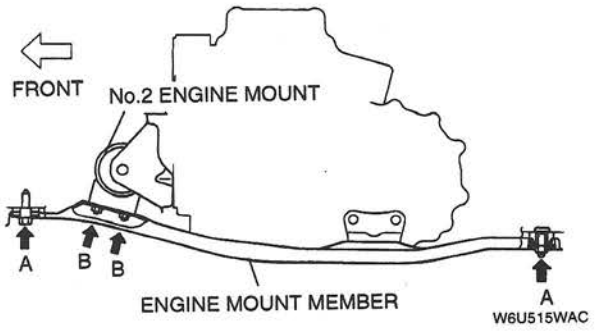
FRONT
No.2 ENGINE MOUNT
A
B
B
ENGINE MOUNT MEMBER
A
W6U515WAC

05–16 MANUAL TRANSAXLE SHIFT MECHANISM

SHIFT MECHANISM
REMOVAL/INSTALLATION 05–16–1

SHIFT MECHANISM REMOVAL/INSTALLATION

W6U516W01

1. Remove the three-way catalystic converter. (Refer to 01–13A EXHAUST SYSTEM REMOVAL/INSTALLATION [FS].) (Refer to 01–13B EXHAUST SYSTEM REMOVAL/INSTALLATION [KL].)
2. Remove in the order indicated in the table.
3. Install in the reverse order of removal.
4. After installation, verify that the gear shift lever operates smoothly when the clutch pedal is depressed.

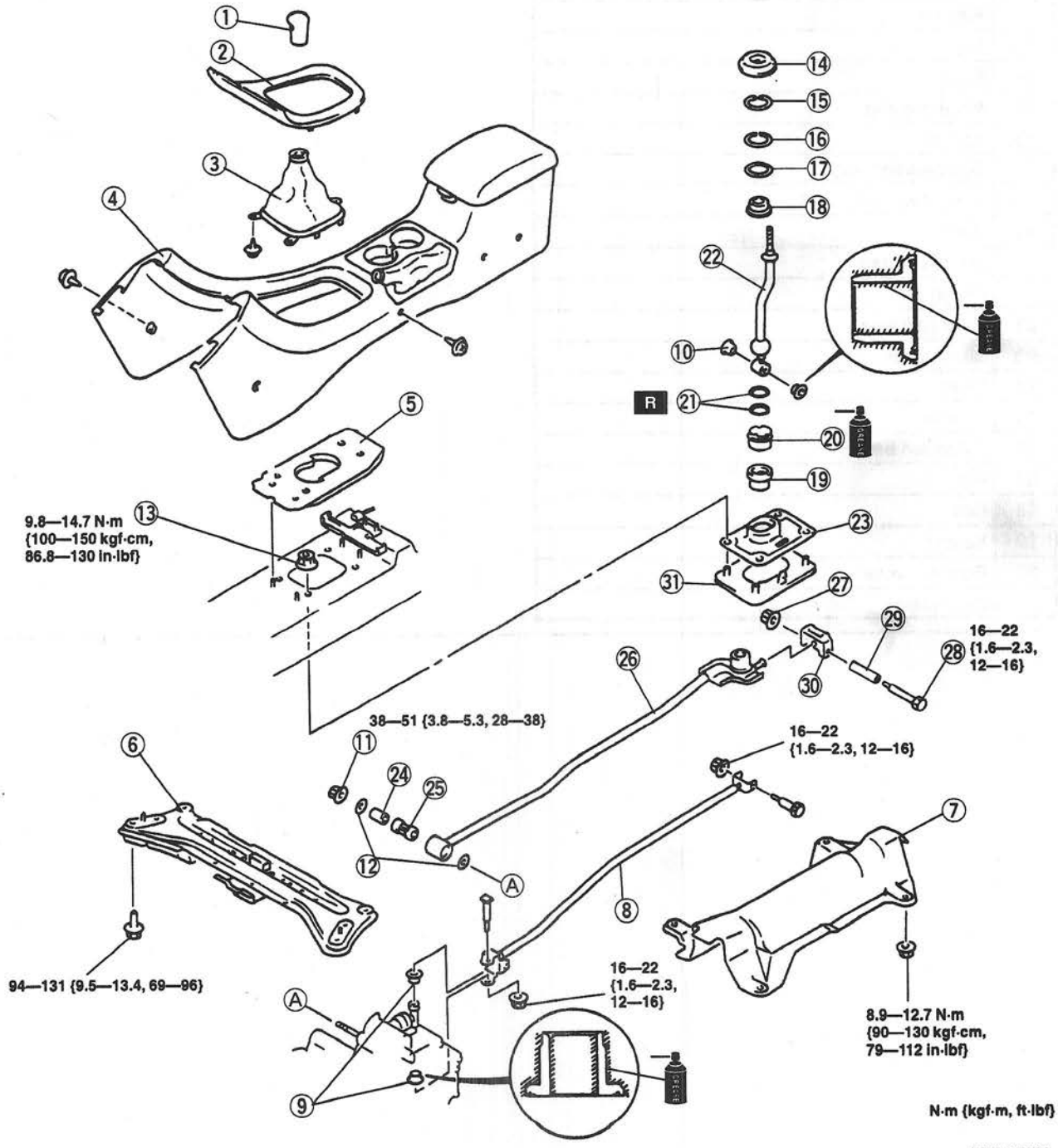

N·m {kgf·m, ft·lbf}

W6U516WA0

1	Shift knob
2	Front console
3	Boot
4	Rear console
5	Insulator
6	Transverse member
7	Heat insulator
8	Change control rod
9	Bushing
10	Bushing
11	Nut
12	Washer
13	Nut
14	Boot
15	Retaining ring
16	Spacer
17	Compression ring
18	Upper ball seat
19	Boot
20	Lower ball seat
21	O-ring
22	Gear shift lever
23	Seal rubber
24	Pipe
25	Bushing
26	Extension bar
27	Nut
28	Bolt
29	Spacer
30	Rubber mount
31	Base plate

05–17A AUTOMATIC TRANSAXLE [LA4A-EL]

MECHANICAL SYSTEM TEST [LA4A-EL] 05–17A–2
- Mechanical System Test Preparation . 05–17A–2
- Line Pressure Test 05–17A–2
- Stall Test 05–17A–3
- Time Lag Test 05–17A–3
- Torque Converter Clutch Operation Test 05–17A–4

ROAD TEST [LA4A-EL] 05–17A–5
- Road Test Preparation 05–17A–5
- Typical Shift Diagram 05–17A–5
- D Range Test 05–17A–5
- 2 Range Test 05–17A–7
- 1 Range Test 05–17A–7
- P Position Test 05–17A–7

AUTOMATIC TRANSAXLE FLUID (ATF) INSPECTION [LA4A-EL] 05–17A–7
- ATF Condition Inspection 05–17A–7
- ATF Level Inspection 05–17A–8

AUTOMATIC TRANSAXLE FLUID (ATF) REPLACEMENT [LA4A-EL] 05–17A–8

ELECTRICAL SYSTEM COMPONENTS [LA4A-EL] 05–17A–9
- Transaxle Tester Instruction 05–17A–9
- TR/MLP Tester Instruction 05–17A–14

TRANSAXLE RANGE SWITCH REMOVAL/INSTALLATION [LA4A-EL] 05–17A–16

O/D OFF SWITCH INSPECTION [LA4A-EL] 05–17A–17

O/D OFF SWITCH REMOVAL/INSTALLATION [LA4A-EL] 05–17A–17

VEHICLE SPEEDOMETER SENSOR INSPECTION [LA4A-EL] 05–17A–17

VEHICLE SPEEDOMETER SENSOR REMOVAL/INSTALLATION [LA4A-EL] .. 05–17A–18

SOLENOID BODY REMOVAL/INSTALLATION [LA4A-EL] .. 05–17A–18

TURBINE SHAFT SPEED SENSOR REMOVAL/INSTALLATION [LA4A-EL] .. 05–17A–19

TRANSAXLE FLUID TEMPERATURE SENSOR REMOVAL/INSTALLATION [LA4A-EL] .. 05–17A–19

O/D OFF INDICATOR LIGHT INSPECTION [LA4A-EL] 05–17A–19

POWERTRAIN CONTROL MODULE INSPECTION [LA4A-EL] 05–17A–19

POWERTRAIN CONTROL MODULE REMOVAL/INSTALLATION [LA4A-EL] .. 05–17A–19

AUTOMATIC TRANSAXLE REMOVAL/INSTALLATION [LA4A-EL] .. 05–17A–20
- No.4 Engine Mount Removal Note ... 05–17A–23
- Tie-Rod End Removal Note 05–17A–23
- Lower Arm Removal Note 05–17A–23
- Drive Shaft Removal Note 05–17A–23
- Transaxle Removal Note 05–17A–24
- Transaxle Installation Note 05–17A–24
- Joint Shaft Installation Note 05–17A–24
- Drive Shaft Installation Note 05–17A–25
- Lower Arm Installation Note 05–17A–25
- Tie Rod End Installation Note 05–17A–25
- No.2 Engine Mount, Engine Mount Member Installation Note 05–17A–25

2/4 BAND SERVO REMOVAL/INSTALLATION 05–17A–26

CONTROL VALVE BODY AND TERMOSTATIC OIL LEVEL CONTROL VALVE REMOVAL/INSTALLATION [LA4A-EL] .. 05–17A–27

OIL SEALS REMOVAL/INSTALLATION [LA4A-EL] 05–17A–29

OIL PUMP BODY SEAL REMOVAL/INSTALLATION [LA4A-EL] 05–17A–29
- Issue 05–17A–29
- Action 05–17A–29

OIL COOLER REMOVAL/INSTALLATION [LA4A-EL] 05–17A–33
- Radiator Installation Note 05–17A–34
- Oil Pipe Installation Note 05–17A–34
- Oil Hose Installation Note 05–17A–34
- Hose Clamp Installation Note 05–17A–34

DRIVE PLATE REMOVAL/INSTALLATION [LA4A-EL] 05–17A–35
- Drive Plate Mounting Bolts Removal Note 05–17A–35
- Drive Plate Mounting Bolts Installation Note 05–17A–35

MECHANICAL SYSTEM TEST [LA4A-EL]

W6U517W01

Mechanical System Test Preparation

1. Engage the parking brake and use wheel chocks at the front and rear of the wheels.
2. Check the engine coolant. (Refer to 01–12 ENGINE COOLANT LEVEL INSPECTION.)
3. Check the engine oil. (Refer to 01–11 ENGINE OIL INSPECTION.)
4. Check the ATF levels. (Refer to 05–17A AUTOMATIC TRANSAXLE FLUID (ATF) INSPECTION [LA4A-EL], ATF Level Inspection.)
5. Check the ignition timing. (Refer to 01–10A ENGINE TUNE-UP [FS], Ignition Timing Inspection.)
6. Check the idle speed. (Refer to 01–10A ENGINE TUNE-UP [FS], Idle Speed Inspection.)

Line Pressure Test

This test measures line pressure as a means of checking the hydraulic components and inspecting for oil leakage.

Warning

- **Removing the inspection port bolt when the ATF is hot can be dangerous. Hot ATF can come out of the opening and badly burn. Before removing the inspection port bolt, allow the ATF to cool.**

Caution

- **Perform the Line Pressure Test at engine idle prior to performing the test at engine stall. If line pressure is low at idle do not perform the test at engine stall or further transaxle damage will occur.**

1. Remove the inspection port bolt shown in the figure.

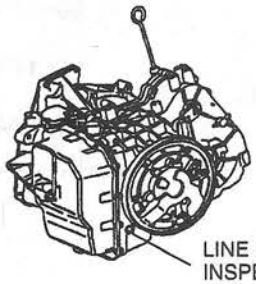

W6U517WA0

2. Connect the **SSTs** (49 UN01 128, 49 B019 901, and 49 B019 903) to the line pressure inspection port.

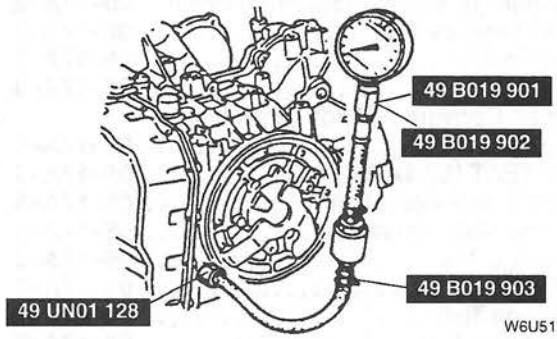

W6U517WA1

3. Start the engine.
4. While depressing the brake pedal move the shifter to each sector position and record line pressure at engine idle.
5. Compare pressure valves recorded to values specified in follows table.
6. Turn the engine off.
7. Replace the **SST** (49 B019 901) to the 49 B019 902.

Caution

- **If the accelerator pedal is pressed for longer than 5 seconds while the brake pedal is depressed, the transaxle could be damaged. Therefore, do steps 5 and 6 within 5 seconds of each other.**

8. Start the engine.
9. Shift the selector lever to R position.
10. Firmly depress the foot brake with the left foot, and gently depress the accelerator pedal with the right foot.
11. When the engine speed no longer increases, record line pressure and release the accelerator.
12. Shift the selector to N position and let the engine idle for 1 minute or more to cool the ATF.
13. Perform stall tests for the remaining ranges in the same manner.
    (1) D range
    (2) 2 range
    (3) 1 range
14. Compare results with line pressure specifications in table.

Specification

Position/Range	LINE PRESSURE SPECIFICATIONS (kPa {kgf/cm^2, psi})	
	IDLE	STALL
P, N	470—530 {4.81—5.41, 68—77}	—
R	470—530 {4.81—5.41, 68—77}	1,790—2,020 {18.21—20.66, 259—294}
D	330—370 {3.34—3.75, 47—53}	1,158—1,269 {11.80—12.93, 168—184}
2	330—370 {3.34—3.75, 47—53}	1,158—1,269 {11.80—12.93, 168—184}
1	330—370 {3.34—3.75, 47—53}	1,158—1,269 {11.80—12.93, 168—184}

15. Shift the selector lever to P position.
16. Turn off the engine.

17. Install a new square head plug in the inspection port.

Tightening torque
22—26 N·m {2.3—2.6 kgf·cm, 16—19 ft·lbf}

Evaluation of line pressure test

Line pressure	Possible cause
Low pressure in every position	Fluid level low Restricted inlet filter Control valve body, solenoid body or accumulater body is loose Excessive leakage in pump, case, control bodies Sticking main regulator valve Damaged inlet tube seal or inlet filter Damaged gaskets, separator plate
Higher than specification	Problem with main regulator valve, solenoid body and wiring harness

Stall Test
This test is performed to determine if there is slippage at the friction elements or malfunction of the hydraulic components.
1. Start the engine.
2. Shift the selector lever to D range.

Caution
- **If the accelerator pedal is depressed for longer than 5 seconds while the brake pedal is depressed, the transaxle could be damaged. Therefore, do steps 2 and 3 within 5 seconds of each other.**

3. Firmly depress the brake pedal with the left foot, and then gradually depress the accelerator pedal with the right.
4. When the engine speed no longer increases, quickly read the engine speed and release the accelerator.
5. Shift the selector to N position and let the engine idle for 1 minute or more to cool the ATF.
6. Perform a stall test of R position in the same manner.

Engine stall speed
2,200—2,500 rpm

Evalution of stall test

Condition		Possible cause
Above specification	In D range	Forward clutch Forward one-way clutch Low one-way clutch
	In R position	Reverse clutch Low and reverse clutch
Below specification		Engine Torque converter one-way clutch

7. Turn off the engine.

Time Lag Test
This test measures time lag as a means of checking the hydraulic components and the friction elements.
1. Start the engine.
2. Warm up the engine until the ATF reaches 66—77 °C {150—170 °F}.
3. After normal operating temperature is reached, shift the selector from N position to D range.
4. Use a stopwatch to measure the time it takes from shifting until engagement is felt. Make three measurements for each test and average the results.
5. Perform the test for the following shifts in the same manner.
   - N position → R position

Time lag
N → D range ... below approx. 1.0 second
N → R position ... below approx. 1.0 second

Evaluation of time lag test

Condition		Possible Cause
N → D shift	Above specification	Insufficient line pressure Forward clutch slipping Forward one-way clutch slippage Low one-way clutch slippage
	Below specification	Forward accumulator not operating properly Excessive line pressure
N → R shift	Above specification	Insufficient line pressure Low/reverse clutch slippage Reverse clutch slippage
	Below specification	Low/reverse accumulator not operating properly Excessive line pressure

6. Turn off the engine.

Torque Converter Clutch Operation Test
This test verifies that the torque converter clutch control system and the torque converter are operating properly.

Warning
- **Doing this test by yourself can be dangerous. You could have an accident if you are looking at the manual or devices while driving, which may resulting in death or injury. Always have another person in the vehicle with you to read the manual or devices while you drive.**

Note
- Perform the OBD test. Check for a code P0741 or P0743. Refer to the appropriate pinpoint test or procedure for diagnosis.

1. Bring the engine to normal operating temperature by driving the vehicle at highway speeds for approximately 15 minutes in D range.
2. After normal operating temperature is reached, maintain a constant vehicle speed of about 80 km/h {50 mph}, and tap the brake pedal with the left foot.
3. Engine rpm should increase when the brake pedal is tapped, and decrease about 5 seconds after the brake pedal is released. If this does not occur, refer to Torque Converter Operation Concern in 05–01A AUTOMATIC TRANSAXLE SYMPTOM TROUBLESHOOTING [LA4A-EL].
4. If the vehicle stalls in D range at idle with the vehicle at a stop, move the selector lever to 1 range. If the vehicle stalls, the cause may be the converter control valve in the oil pump. Service as required. If the vehicle does not stall in 1 range, refer to Pinpoint Test C1 in 05–01A AUTOMATIC TRANSAXLE ON-BOARD DIAGNOSIS [LA4A-EL].

ROAD TEST [LA4A-EL]

W6U517W02

Road Test Preparation

1. Check the engine coolant. (Refer to 01–12 ENGINE COOLANT LEVEL INSPECTION.)
2. Check the engine oil. (Refer to 01–11 ENGINE OIL LEVEL INSPECTION.)
3. Check the ATF levels. (Refer to 05–17A AUTOMATIC TRANSAXLE FLUID (ATF) INSPECTION [LA4A-EL], ATF Level Inspection.)
4. Check the ignition timing. (Refer to 01–10A ENGINE TUNE-UP [FS], Ignition Timing Inspection.)
5. Check the idle speed. (Refer to 01–10A ENGINE TUNE-UP [FS], Idle Speed Inspection.)

Typical Shift Diagram

D RANGE (O/D OFF SWITCH OFF, NORMAL MODE)

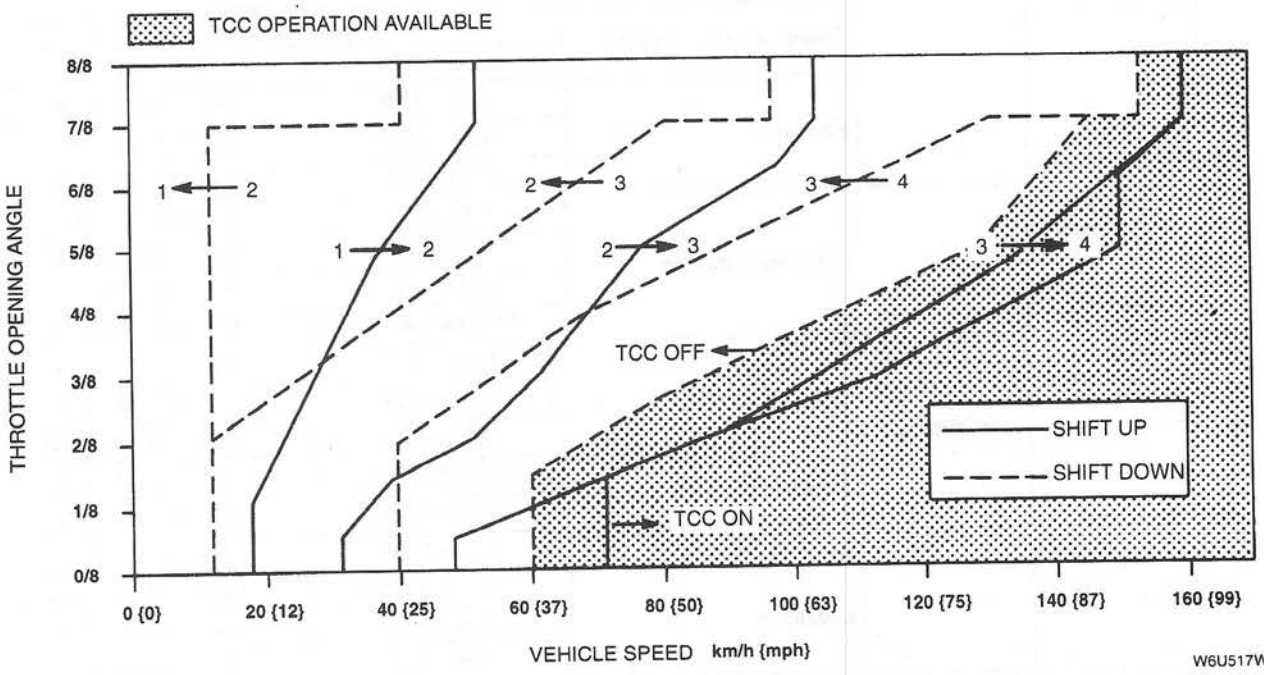

W6U517WA2

D Range Test

D range (O/D OFF switch OFF)

Note

- The power mode or the normal mode is automatically selected by the powertrain control module.

1. Shift the selector lever to D range.
2. Accelerate the vehicle with half and wide open throttle.
3. Verify that 1→2, 2→3, and 3→4 upshifts and downshifts are obtained. The shift points must be as shown in the D range (O/D OFF switch OFF) shift point.
4. Drive the vehicle in fourth, third, and second gears and verify that kickdown occurs for 4→3, 3→2, 3→1, 2→1, and that the shift points are as shown in the D range (O/D OFF switch OFF) shift point.
5. Decelerate the vehicle and verify that engine braking effect is felt in fourth and third gears.
6. Drive the vehicle and verify that torque converter clutch operation is obtained. (only for normal mode)

D range (O/D OFF switch ON)

1. Shift the selector lever to D range, and set the O/D OFF switch to ON.
2. Accelerate the vehicle with the throttle half open.
3. Verify that 1→2 and 2→3 upshifts and downshifts are obtained. The shift points must be as shown in the D range (O/D OFF switch ON) shift point.
4. Drive the vehicle in third and second gears and verify that kickdown occurs for 3→2, 2→1, and that the shift points are as shown in the D range (O/D OFF switch ON) shift point.
5. Decelerate the vehicle and verify that engine braking effect is felt in third gear.
6. Drive the vehicle and verify that torque converter clutch operation is obtained. (only for normal mode)

Shift point

Range	O/D OFF switch position	Mode	Throttle condition	Shift	Vehicle speed (km/h {mph})
D	O/D OFF switch OFF	POWER	Wide open throttle	1GR→2GR	51—57 {32—35}
				2GR→3GR	101—109 {63—68}
				3GR→4GR	157—167 {97—104}
			Half throttle	1GR→2GR	36—45 {22—28}
				2GR→3GR	74—92 {46—57}
				3GR→4GR	124—149 {77—92}
			Closed throttle position	4GR→3GR	37—43 {23—27}
				3GR→1GR	8—14 {5—9}
			Kickdown	4GR→3GR	148—158 {92—98}
				3GR→2GR	93—101 {58—63}
				2GR→1GR	37—43 {23—27}
		NORMAL	Wide open throttle	1GR→2GR	51—57 {32—35}
				2GR→3GR	101—109 {63—68}
				3GR→4GR	157—167 {97—104}
				TCC ON (4GR)	147—157 {91—97}
			Half throttle	1GR→2GR	28—36 {17—22}
				2GR→3GR	61—77 {38—48}
				3GR→4GR	105—132 {65—82}
				TCC ON (4GR)	118—145 {73—90}
			Closed throttle position	4GR→3GR	37—43 {23—27}
				3GR→1GR	8—14 {5—9}
			Kickdown	4GR→3GR	148—158 {92—98}
				3GR→2GR	93—101 {58—63}
				2GR→1GR	37—43 {23—27}
	O/D OFF switch ON	POWER	Wide open throttle	1GR→2GR	51—57 {32—35}
				2GR→3GR	101—109 {63—68}
			Half throttle	1GR→2GR	36—45 {22—28}
				2GR→3GR	75—91 {47—56}
			Closed throttle position	3GR→1GR	8—14 {5—9}
			Kickdown	3GR→2GR	93—101 {58—63}
				2GR→1GR	42—48 {26—30}
		NORMAL	Wide open throttle	1GR→2GR	51—57 {32—35}
				2GR→3GR	101—109 {63—68}
				TCC ON (2GR)	51—57 {32—35}
				TCC ON (3GR)	101—109 {63—68}
			Half throttle	1GR→2GR	28—37 {17—23}
				2GR→3GR	55—72 {34—45}
				TCC ON (3GR)	55—72 {34—45}
			Closed throttle position	3GR→1GR	8—14 {5—9}
			Kickdown	3GR→2GR	93—101 {58—63}
				2GR→1GR	42—48 {26—28}

2 Range Test

1. Shift the selector lever to 2 range.
2. Accelerate the vehicle with half and wide open throttle, and verify that second gear is held.
3. Decelerate the vehicle and verify that engine braking effect is felt.

Shift point

Range Mode	Throttle condition	Shift	Vehicle speed km/h {mph}
2	—	4GR→3GR	162—168 {100—104}
		3GR→2GR	103—109 {64—68}

1 Range Test

1. Shift the selector lever to 1 range.
2. Accelerate the vehicle with half and wide open throttle, and verify that first gear is held.
3. Decelerate the vehicle and verify that engine braking effect is felt.

Shift point

Range Mode	Throttle condition	Shift	Vehicle speed km/h {mph}
1	—	2GR→1GR	43—49 {27—30}

P Position Test

- Shift into P position on a gentle slope, release the brake, and verify that the vehicle does not roll.

AUTOMATIC TRANSAXLE FLUID (ATF) INSPECTION [LA4A-EL]

W6U517W03

ATF Condition Inspection

One way of determining whether the transaxle should be disassembled is by noting:

1. If the ATF is muddy or varnished.
2. If the ATF smells strange or unusual.

ATF Condition

Condition			Possible cause
Clear dark red		Normal	—
Light red (pink)		Contaminated with water	• Broken oil cooler inside of radiator • Poor breather hose installation By water contamination, problem could be occurring to parts inside the transaxle. It is necessary to overhaul transaxle and detect defected parts. If necessary, exchange transaxle.
Reddish brown	Has burnt smell and metal specs are found	Deteriorated ATF	Defective powertrain components inside of transaxle. Specs cause wide range of problems by plugging up in oil pipe, control valve body, and oil cooler in radiator. • When large amount of metal specs are found, overhaul transaxle and detect defective parts. If necessary, exchange transaxle. • Implement flushing operation as there is a possibility to have specs plugged in oil pipe and/or oil cooler inside of radiator.
	Has no burnt smell	Normal	Discoloration by oxidation

ATF Level Inspection

Caution
- **The ATF amount varies according to ATF's temperature. Therefore, when checking the ATF level or replacing the ATF, use a thermometer to measure the temperature then adjust the ATF amount to the specified level according to the specified temperature.**

1. Park the vehicle on level ground.
2. Apply the parking brake and position wheel chocks securely to prevent the vehicle from rolling.

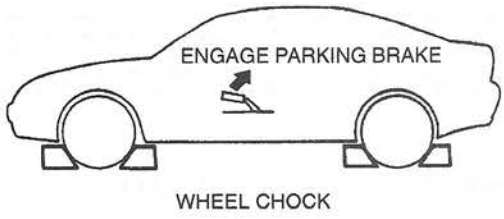

W6U517WCW

3. Adjust the length of the thermistor probe measure to the same length as the dipstick and hold the probe with a paper holder. Insert into the filler tube and measure the temperature.

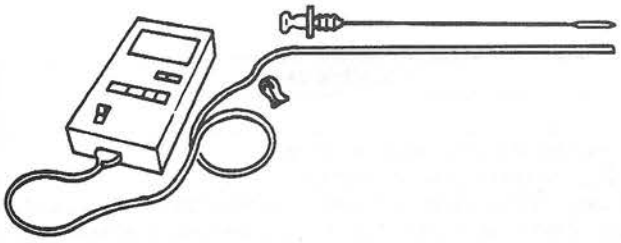

W6U517WA3

4. Warm up the engine until the ATF reaches **66—77 °C {150—170 °F}**.

Caution
- **Do not warm the transaxle by performing stalls. This will damage the torque converter.**

5. While depressing the brake pedal, shift the selector lever to each range (P—1), pausing momentarily in each range.
6. Shift back to P position.

Note
- If the ATF level is too high or too low in hot condition, the following problems may be the cause.

ATF level	Condition	Possible cause
Too low	Line pressure is lower than the specification	Air in transaxle oil passage due to slipping or damaged clutch mechanism
Too high	ATF is hot	ATF deteriorated due to slipping clutch or stuck valve

7. Ensure that the ATF level is between max. and min.

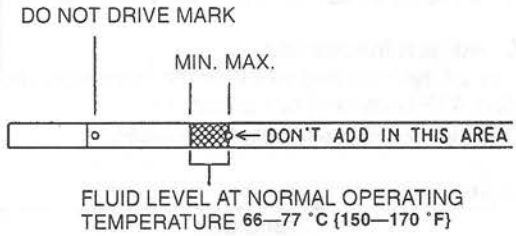

W6U517WA4

ATF type
ATF M-III or equivalent (e.g. Mercon®)

AUTOMATIC TRANSAXLE FLUID (ATF) REPLACEMENT [LA4A-EL]

W6U517W04

Warning
- **When the transaxle and ATF art hot, they can badly burn. Turn off the engine and wait until they are cool before changing the ATF.**

1. Remove the dipstick.
2. Remove the drain plug.
3. Clear the sealant dust from the bolt hole.
4. Install a drain plug.

Tightening torque
15—35 N·m {1.5—3.6 kgf·m, 11—26 ft·lbf}

5. Add the specified amount and type of ATF through the oil filler tube.

ATF type
ATF M-III or equivalent (e.g. Mercon®)
Capacity
8.3 L {8.8 US qt, 7.3 Imp qt}

6. Install the dipstick.
7. Verify the ATF level. (Refer to 05–17A AUTOMATIC TRANSAXLE FLUID (ATF) INSPECTION [LA4A-EL], ATF Level Inspection.)

ELECTRICAL SYSTEM COMPONENTS [LA4A-EL]

W6U517W05

Transaxle Tester Instruction

The transaxle tester allows a technician to operate the electrical portion of the transaxle independent of the vehicle electronics. The transaxle tester usage is divided into five steps.

1. Preliminary testing and diagnosis.
2. Installing the transaxle tester.
3. Static testing-vehicle OFF.
4. Dynamic testing-vehicle running.
5. Removing the transaxle tester and clearing Diagnostic Trouble Codes (DTCs).

Preliminary testing and diagnosis

Before any diagnostic testing is done on a vehicle some preliminary checks must be performed, as outlined below. Be sure to write down your findings, especially any DTC, for future reference.

1. Verify customer's concern
   - upshift
   - downshift
   - coasting
   - engagement
   - noise/vibration

   (1) If noise/vibration, check for dependencies:
   - engine speed dependent
   - vehicle speed dependent
   - shift dependent
   - gear dependent
   - range dependent
   - temperature dependent
2. Vehicle at normal operating temperature.
3. Check fluid level and condition.
4. Visually inspect the vehicle for the following items:
   - vehicle modifications
   - electronic add-on items
   - leaks
   - proper linkage adjustments
   - Perform vehicle on-board diagnosis test. (Refer to 05–01A AUTOMATIC TRANSAXLE ON-BOARD DIAGNOSIS [LA4A-EL].)

Installing the transaxle tester (Set Up Procedures)

Installing the transaxle tester at the solenoid body connector allows the separation of the vehicle electronics from the transaxle electronics. Disconnecting the normal vehicle electronics will set additional DTCs and cause firm shifts. (Disconnecting the transaxle connector defaults the transaxle to maximum line pressure).

Note

- During tester usage, additional DTCs may be set.
- Therefore, it is important that all DTCs are erased after repairs have been made. To verify elimination of all DTCs, rerun the On-Board Diagnostic Test. (Refer to 05–01A AUTOMATIC TRANSAXLE ON-BOARD DIAGNOSIS [LA4A-EL].)

Caution

- **Do not attempt to pry off connectors with a screwdriver.**
  This will damage the connector and could result in a transaxle concern.

1. Disconnect the emission harness at the transaxle connector and at the TSS connector on the oil pump body in the LH wheel arch.
2. Turn the tester solenoid select switch to the "OHMS CHECK" position.

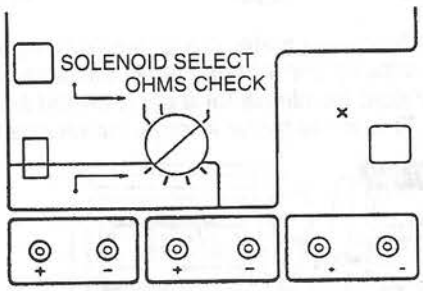

W6U517WA5

Caution

- **Route all cables away from heat sources.**

3. Install the **SST** (Transaxle overlay) onto tester. Connect the **SST** (Transaxle diagnostic harness) to the transaxle tester and then to the appropriate solenoid body connector and turbine shaft speed (TSS) connector.

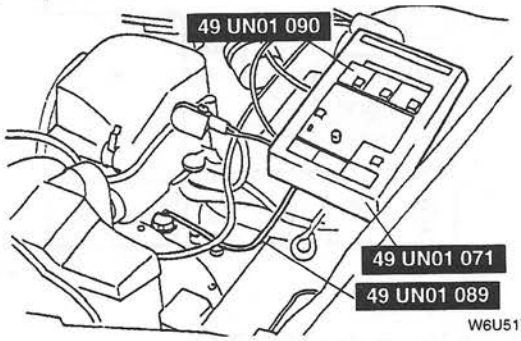

W6U517WA6

Caution

- **Route all gauge lines away from heat sources.**

Warning

- **Removing the line pressure inspection port when the ATF is hot can be dangerous.**
  Hot ATF can come out of the opening and badly burn. Before removing the line pressure inspection port, allow the ATF to cool.

4. Remove the square head plug shown in the figure.

5. Connect the **SSTs** to the line pressure inspection port.

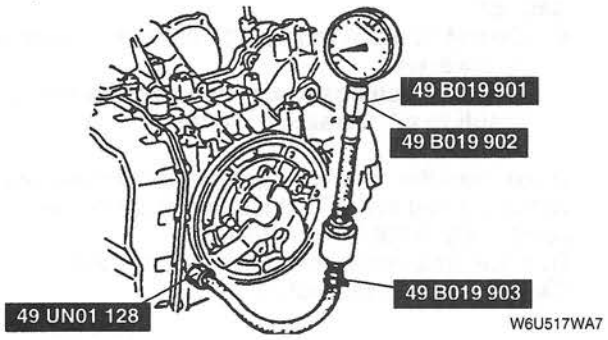

6. Plug the transaxle tester power supply plug into the cigarette lighter receptacle. At this time, all LED's should illuminate for a short period and then turn off. This is the tester internal circuit check.

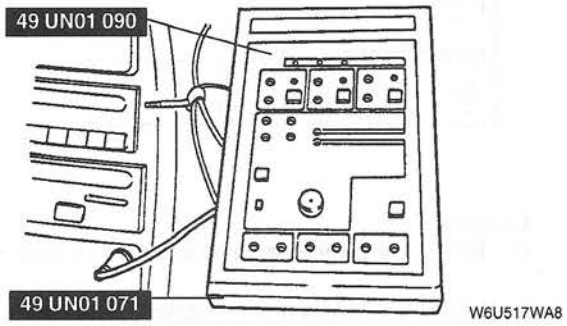

7. Set the Bench/Drive switch to "BENCH" mode.

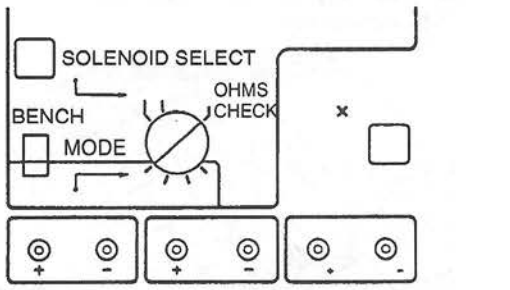

Static testing-engine "OFF"
Static testing procedures allow for shop testing of the transaxle in the vehicle or on the bench. Completion of these tests prove out the transaxle electronically.

Caution
- **For resistance checks, be sure that the tester solenoid select switch is set to the "OHMS CHECK" position or damage to the ohmmeter may result.**

Resistance/Continuity Tests
- Refer to Pinpoint Test (Refer to 05–01A AUTOMATIC TRANSAXLE ON-BOARD DIAGNOSIS [LA4A-EL].) to be performed "On Board Diagnostics" based on the DTC displayed.
- Using a volt-ohmeter and the transaxle tester, perform the Pinpoint Tests as indicated in "On Board Diagnostics" (Refer to 05–01A AUTOMATIC TRANSAXLE ON-BOARD DIAGNOSIS [LA4A-EL]) based on the DTC which were displayed.
- Perform repairs as indicated by the Pinpoint Tests. (Refer to 05–01A AUTOMATIC TRANSAXLE ON-BOARD DIAGNOSIS [LA4A-EL].) Always retest and road test the vehicle after a repair. (Refer to 05–17A ROAD TEST [LA4A-EL].)

Transaxle solenoid and sensors resistance tests
Solenoids (Electronic pressure control (EPC), Shift solenoid No.1 (SS1), Shift solenoid No.2 (SS2), TCC, 3–2 Timing/coasting clutch solenoid (3–2T/CCS)
1. Set an ohmmeter to the 0—100 ohm range.
2. Connect the positive lead of the ohmmeter to the appropriate VPWR jack for the solenoid being tested.
3. Connect the negative lead of the ohmmeter to the appropriate solenoid (EPC, SS1, SS2, TCC, 3–2T/CCS) jack.

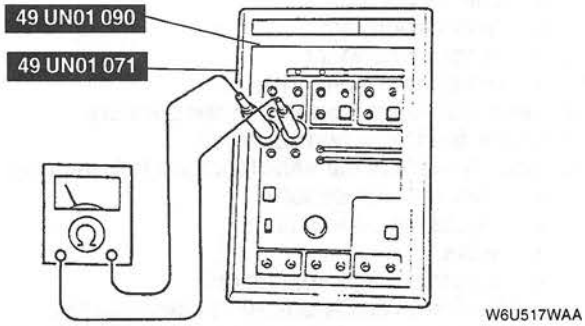

4. Record the resistance.
5. Refer to the chart for the values.

SOLENOID	SOLENOID RESISTANCE (Ω)
SS1	12—22
SS2	12—22
TCC	12.5—19.0
EPC	3.7—5.92
3–2T/CCS	3.7—5.92

6. If out of range, refer to the following pinpoint tests. (Refer to 05–01A AUTOMATIC TRANSAXLE ON-BOARD DIAGNOSIS.)
   - Pinpoint test E (EPC)
   - Pinpoint test A (SS1, SS2)
   - Pinpoint test C (TCC)
   - Pinpoint test G (3–2T/CCS)

Transaxle fluid temperature (TFT)

1. Set an ohmmeter to the 1,000 ohm range.
2. Connect the positive lead to the + TFT jack.
3. Connect the negative lead to the – TFT jack.

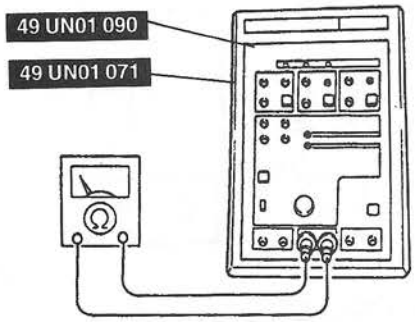

W6U517WAB

4. Record the resistace. Resistance will vary with temperature.
5. Refer to the chart for the valves.

Temperature °C {°F}	Resistance kΩ
–40— –20 {–40— –4}	967—284
–19— –1 {–3—31}	284—100
0—20 {32—68}	100—37
21—40 {59—104}	37—16
41—70 {105—158}	16—5
71—90 {159—194}	5—2.7
91—110 {195—230}	2.7—1.5
111—130 {231—266}	1.5—0.8
131—150 {267—302}	0.8—0.54

6. If out of range, refer to the Pinpoint test BA, BB, BC, BD, BE, BF. (Refer to 05–01A AUTOMATIC TRANSAXLE ON-BOARD DIAGNOSIS [LA4A-EL].)

Turbine shaft speed (TSS) sensor

1. Set an ohmmeter to the 1,000 ohm range.
2. Connect the postive lead to the +TSS jack.
3. Connect the negative lead to the –TSS jack.

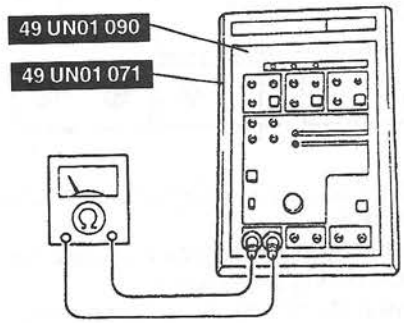

W6U517WAC

4. Record the resistance.
5. TSS should be **140—290 ohm**.
6. If out of range, refer to the Pinpoint test F. (Refer to 05–01A AUTOMATIC TRANSAXLE ON-BOARD DIAGNOSIS [LA4A-EL].)

Solenoid voltage tests

Note

- LED will turn "GREEN" when solenoid activates and turn "OFF" when deactivated. LED will turn "RED" if an activated solenoid/harness is shorted to BAT+. LED will remain "OFF" if an activated solenoid/harness is shorted to ground or no continuity.

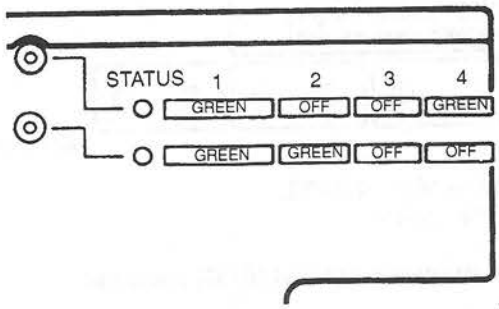

W6U517WAD

1. Set Bench/Drive switch to "BENCH" mode.
2. Set an voltmeter to the 20 volt D.C. range.
3. Connect the voltmeter positive lead to the appropriate solenoid power circuit.
4. Connect voltmeter negative lead to the appropriate solenoid.

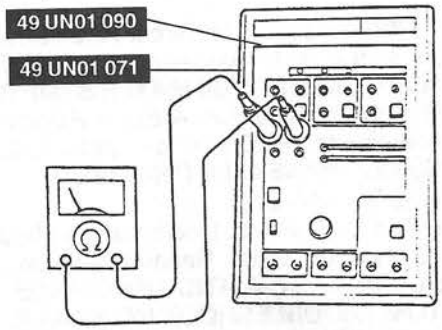

W6U517WAE

5. Using the voltmeter, check for voltage across each solenoid by activating the solenoid switch. Select the appropriate solenoid with the rotary switch and depress the corresponding solenoid switch. The "LED" should illuminate, the voltage should change, and an audible click is heard. If "LED" does not illuminate, there is a short to ground condition.
6. Observe and record the values.

Dynamic testing-engine "ON"

Dynamic testing is the final step in the transaxle tester usage. It allows the transaxle to be proven out electronically and hydraulically.

Preliminary set up

1. Set the Bench/Drive switch to DRIVE mode.
2. Rotate the gear select switch on tester to the GEAR SELECT "1" position.

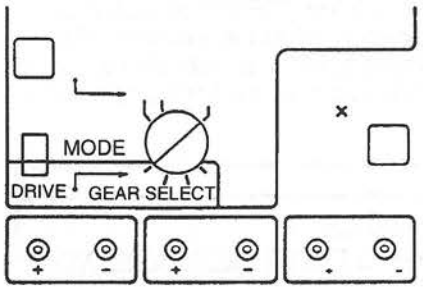

W6U517WAF

3. Set the vehicle in PART.
4. Start the engine.

Electrical pressure control (EPC) solenoid

Caution

- **Do not attempt to keep the EPC switch depressed (minimum line pressure) and stall the transaxle (holding the vehicle with the brake while depressing the throttle with the transaxle in gear). Transaxle damage will result.**

1. Observe the line pressure. Record the value. Line pressure should go to maximum. If not, refer to 05–01A AUTOMATIC TRANSAXLE SYMPTOM TROUBLESHOOTING [LA4A-EL] or Pinpoint test "E" concerning the EPC solenoid. (refer to 05–01A AUTOMATIC TRANSAXLE ON-BOARD DIAGNOSIS [LA4A-EL].)
2. Depress the EPC switch. Line pressure should drop to a minimum value. Record the value. If not, refer to 05–01A AUTOMATIC TRANSAXLE SYMPTOM TROUBLESHOOTING [LA4A-EL] or Pinpoint Test "E". (refer to 05–01A AUTOMATIC TRANSAXLE ON-BOARD DIAGNOSIS [LA4A-EL].)

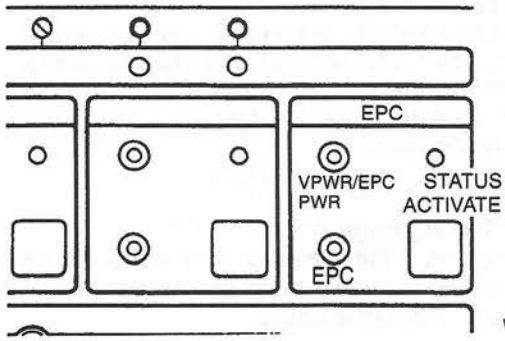

W6U517WAG

Transaxle engagement

Note

- Engagement will be harsh and line pressure will be at maximum regardless of the EPC switch during reverse check.

1. Set the Bench/Drive switch to the "DRIVE" mode.
2. Rotate the gear select switch to GEAR SELECT "1".

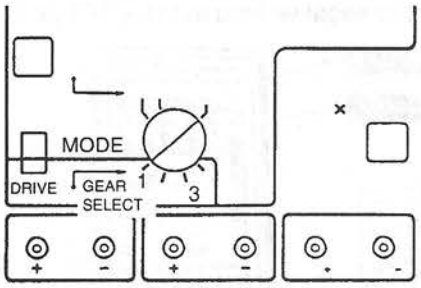

W6U517WAH

3. Turn GEAR SELECT switch to 3/R.
   (1) Shift vehicle from PARK to REVERSE.
   - Did vehicle shift into REVERSE?
   - Was engagement harsh?

   (2) Shift vehicle from REVERSE to PARK.
4. Turn GEAR SELECT switch to 1.
   (1) Depress EPC switch. Line pressure should drop to idle pressure.
   (2) While holding the EPC switch down, shift vehicle from PARK to DRIVE.
   - Did the vehicle shift into DRIVE?
   - Was engagement smooth?

   (3) Shift the vehicle from DRIVE to PARK.
   (4) Release EPC switch. Pressure should return to maximum.
   (5) With the EPC switch released, repeat step 5. Engagement should be firm.

Upshift Downshift

Note

- GEAR SELECT SWITCH must be in GEAR SELECT "3/R" to get REVERSE gear.

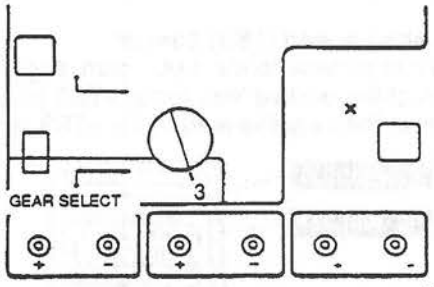

W6U517WAJ

- Upshifts and downshifts will be FIRM during this procedure.
- Pressure gauges may be removed from the vehicle during these tests.
- These tests should be performed on the road. If they are performed on the hoist, a mechanic may not feel all of the shifts when they are engaged.
- LED's will turn "green" when solenoids are activated and turn "off" when deactivated. Refer to the appropriate overlay for the proper status/shift sequence of the shift solenoids during upshift and downshift.

Caution
- **Selector lever must be in the D range position or internal damage could result. Do not shift to 2 or 1 range position.**

1. Verify that the gear select switch is in first gear position. Move the selector lever into the D range. Depress the 3–2 timing/coasting clutch solenoid (3–2 T/CCS) button and accelerate the vehicle. If there is no vehicle movement, inspect the forward one-way clutch. If movement occurs, proceed to step 2 and continue diagnosis.
2. Verify that the gear select switch is in "1" position. Move the selector shift lever into D range and accelerate to **24 km/h {15 mph}**. Select second gear by rotating the gear selector switch to "2" position.
   - Did the vehicle upshift to second gear?
   - Did the appropriate shift solenoids activate/deactivate?
3. Accelerate to **40 km/h {25 mph}** and select "3" position.
   - Did the vehicle upshift to third gear?
   - Did the appropriate shift solenoids activate/deactivate?
4. Accelerate to **56—72 km/h {35—45 mph}** and select "4" position.
   - Did the vehicle upshift to fourth gear?
   - Did the appropriate shift solenoids activate/deactivate?

Caution
- **The vehicle must be below 56 km/h {35 mph} before selecting gear select "1" position, or the transaxle could overrun.**

5. Reverse the order to downshift.

Note
- 4–3 downshift will be harsh when using the transaxle tester.

- Does the vehicle down shift from forth gear to third gear, third gear to second gear, and second gear to first gear?
- Did the appropriate shift solenoids activate/deactivate?

Torque converter clutch (TCC) engagement

Note
- This test should be performed on the road. If it is performed on a hoist, a technician may not feel the torque converter clutch engage.

Caution
- **Do not depress the TCC switch with the transaxle in gear and the vehicle at a stop. Damage to converter clutch may result.**

1. Accelerate and shift the vehicle up into third gear by using the tester (Refer to drive test). Hold the speed steady and depress the TCC switch.
   - Does the torque converter engage?
   - Does the engine speed drop?
   - Did the TCC solenoid activate?

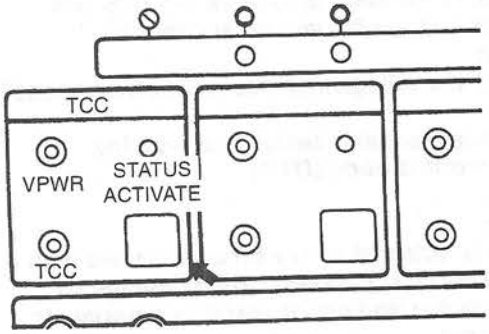

2. Release the TCC switch.
   - Did the TCC solenoid deactivate?
   - Did the TCC release?
   - Did the engine speed increase?

3–2 timing/coasting clutch (3–2T/CCS) engagement

Note
- This test should be performed on the road. If it is performed on the hoist, a mechanic may not feel the 3–2 timing/coasting clutching disengage.

1. Accelerate and upshift the vehicle into second gear. Go to closed throttle. Depress the 3–2T/CCS switch.
   - Does the 3–2 timing/coasting clutch disengage?
   - Did the 3–2T/CCS solenoid deactivate (light on)?
2. Press lightly on the throttle, then release the 3–2T/CCS switch.

Note
- Coast clutch engagement at closed throttle will be harsh.

- Does the 3–2 timing/coasting clutch engage?
- Did engine braking occur?
- Did the 3–2 T/CCS solenoid activate (light off)?

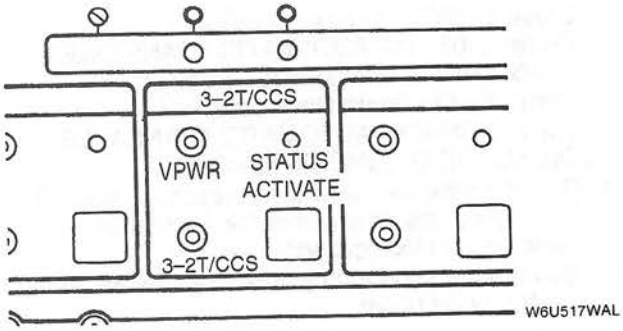

Turbine shaft speed (TSS) sensor function check.

Note
- This test may be performed on the hoist or on the road.

3. Set a voltmeter to 20 volt A.C.
   Connect the positive lead to the (+) TSS jack.
   Connect the negative lead to the (–) TSS jack.
   Slowly accelerate the vehicle and monitor voltmeter.
   - Does the voltage increase with vehicle speed?

Removing the transaxle tester and clearing diagnostic trouble code (DTC)

Caution
- **Do not attempt to pry off connectors with a screwdriver. This will cause damage to connector and could result in a transaxle concern.**

1. Disconnect the **SSTs** from the transaxle connector and TSS connector.

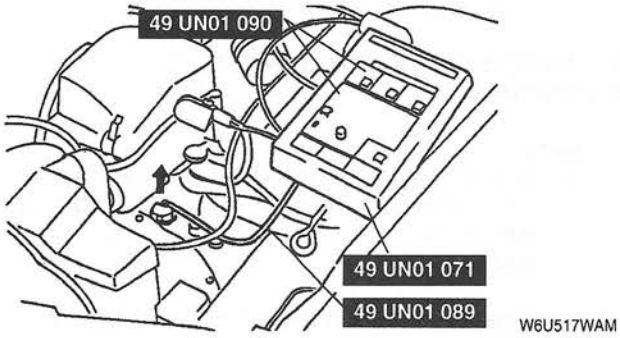

2. Reinstall the emission harnesses. Verify the connections by pulling up on the harness.
3. Disconnect the transaxle tester power lead from the vehicle.

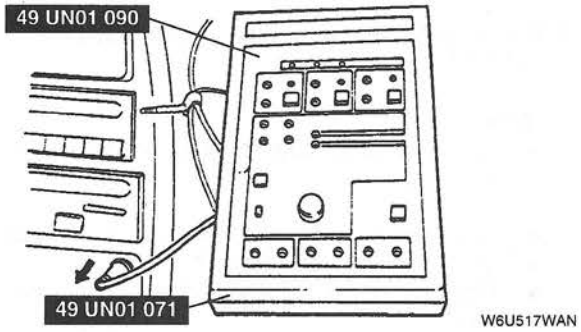

4. Erase all DTCs from the continuous test. (Refer to 05–01A AUTOMATIC TRANSAXLE ON-BOARD DIAGNOSIS [LA4A-EL].)
5. Rerun the On-Board Diagnostic Test. (Refer to 05–01A AUTOMATIC TRANSAXLE ON-BOARD DIAGNOSIS [LA4A-EL].)
6. Based on the transaxle tester results, proceed to the appropriate segment of this section for transaxle or electrical/wiring service.
7. Confirm the servicing by repeating the test with the transaxle tester.

TR/MLP Tester Instruction
The transaxle tester allows the mechanic to operate the electrical portion of the transaxle range (TR) switch. The MLP tester usage is divided into five steps.
1. Preliminary testing and diagnosis.
2. Installing the transaxle tester.
3. Testing the TR switch.
4. Testing the Park/Neutral and backup circuits.
5. Removing the transaxle tester and clearing DTCs.

Preliminary testing and diagnosis
Before any diagnostic testing is carried out on a vehicle, some preliminary checks must be performed, as outlined below. Be sure to write down findings, especially any DTCs found, for future reference.
1. Verify that TR switch is properly adjusted in NEUTRAL.
2. Verify customer concern (e.g. when does concern occur?):
   - upshift
   - downshift
   - coasting
   - engagement
3. If concern involves noise or vibration, does it relate to any of the following:
   - engine speed
   - vehicle speed
   - shift
   - gear
   - range
   - temperature
4. Vehicle must be at normal operating temperature.
5. Check transaxle fluid level and condition.
6. Check for the following items:
   - vehicle modifications
   - electronic add-on items
   - leaks
   - proper linkage adjustments
   - Perform vehicele On-Board Diagnosis Test. (Refer to 05–01A AUTOMATIC TRANSAXLE ON-BOARD DIAGNOSIS [LA4A-EL].)

Installing the transaxle tester (set up procedures)
Installing the transaxle tester at the TR switch connector results the separation of the vehicle electronics from the TR switch electronics.

Note
- During tester usage, additional DTCs may be set. Therefore, it is important that all DTCs are erased after repairs have been made. To verify the elimination of all DTCs, rerun the On-Board Diagnosis Test.

Caution
- **Do not attempt to pry off connectors with a screwdriver. This will damage the connector and could result in a transaxle concern.**

1. Disconnect the emission harness at transaxle range (TR) switch connector.

Note
- For in vehicle testing, use the **SST**.

Caution
- **Route all cables away from heat sources.**

2. Set the two-way switch in the down position. Install the **SSTs** (TR/MLP overlay, MLPS harness adapter) onto the tester. Connect the interface cable (cable I.D. "D") to the transaxle tester and then to the TR switch connector.

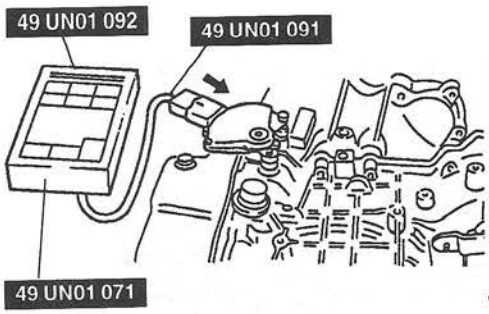

W6U517WAP

3. Turn the test select switch to the "TR/MLP SENSOR TEST" position.

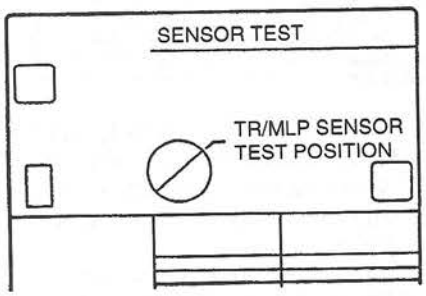

W6U517WAQ

4. Plug the transaxle tester power supply plug into the cigarette lighter receptacle.
At this time, all LED's should illuminate for a short period and then turn off. This is the tester internal circuit check.

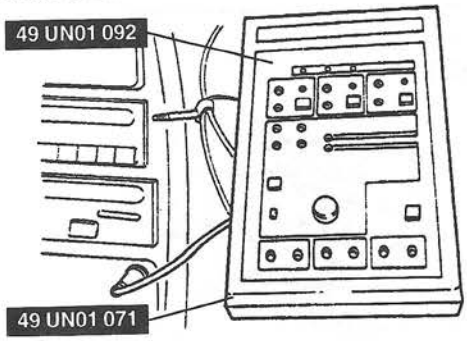

W6U517WAR

Testing the TR switch
Static testing procedures allow for shop testing of the transaxle in the vehicle or on the bench. Completion of these tests prove out the TR switch electronically.

Caution
- **For resistance checks, be sure that the tester select switch is set to the "MLP SENSOR TEST" position or damage to the ohmmeter may result.**

Note
- Using a digital volt-ohmmeter and the transaxle tester, perform the pinpoint test "D" as indicated on the DTCs which were displayed. (Refer to 05–01A AUTOMATIC TRANSAXLE ON-BOARD DIAGNOSIS [LA4A-EL].)
- Perform repairs as indicated by the pinpoint test. Always retest and road test the vehicle after a repair.

TR switch resistance tests
1. Set the ohmmeter to the 1,000 ohm range.
2. Connect the positive lead of the ohmmeter to the MLP jack.
3. Connect the negative lead of the ohmmeter to the SIGRTN jack.
4. Move the selector lever into each range position.
5. Record the resistance at each position.
6. Refer to the chart for values.
7. If out of range, preform the pinpoint test "D". (Refer to 05–01A AUTOMATIC TRANSAXLE ON-BOARD DIAGNOSIS [LA4A-EL].)

Selector lever position	Resistance (ohms)	
	Minimum	Maximum
P	3,770	4,607
R	1,304	1,593
N	660	806
D	361	442
2	190	232
1	78	95

Park/neutral backup light and optional circuit voltage tests

Note
- LED will turn "RED" when the circuit is closed and turn "OFF" when the circuit is open.

1. Set the tester select switch to the "TR/MLP SENSOR TEST" position.

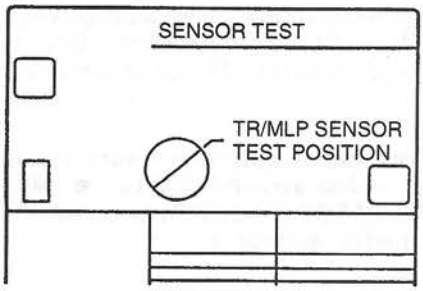

W6U517WAS

2. Press and hold each button while moving the selector lever through each range position.
3. Monitor each "LED".

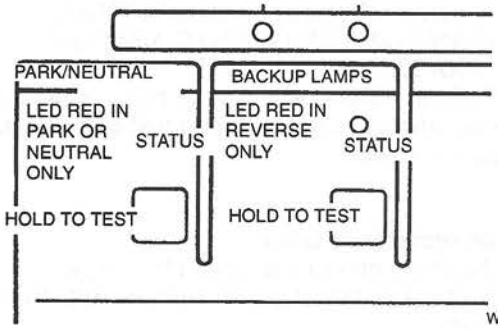

W6U517WAT

4. The status "LED" should indicate "RED" only in the indicated position. Refer to the overelay.
5. If the LED does not indicate "RED" in the desired position, or indicates "RED" in another position, first verify the TR switch alignment and then retest. If the switch fails, then replace.

Removing the transaxle tester and clearing diagnostic trouble code (DTC)

Caution

- **Do not attempt to pry off connectors with a screwdriver. This will damage the connector and could result in a transaxle concern.**

1. Disconnect the transaxle tester from the transaxle range (TR) switch connector.

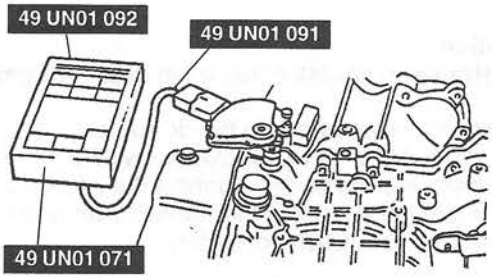

W6U517WAU

2. Reinstall the emission harness. Verify the connection by pulling up on the harness.
3. Disconnect the transaxle tester power lead from vehicle.

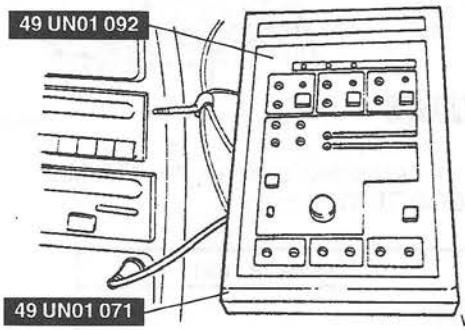

W6U517WAV

4. Erase all DTCs. (Refer to 01–01A ENGINE ON-BOARD DIAGNOSIS [FS].) (Unlatch the center button of the star tester while the codes are being displayed on a key on engine off (KOEO) on-board diagnosis test)
5. Return to the on-board diagnostic test.
6. Verify that the customer concern has been eliminated.

TRANSAXLE RANGE SWITCH REMOVAL/INSTALLATION [LA4A-EL]

1. Disconnect the negative battery cable.
2. Remove the battery component. (Refer to 01–17 BATTERY REMOVAL/INSTALLATION.)
3. Remove the fresh-air duct, air cleaner component. (Refer to 01–13A INTAKE-AIR SYSTEM REMOVAL/INSTALLATION [FS].)
4. Disconnect the transaxle range switch connector.
5. Remove the transaxle range switch.

W6U517W06

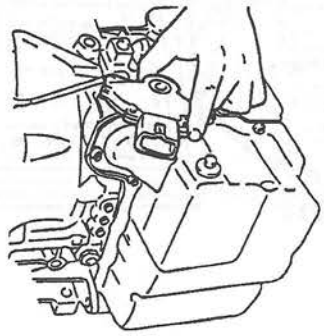

W6U517WAW

6. Shift the transaxle into N position.
7. Install the transaxle range switch on the manual lever shaft.

8. Hand tighten the two mounting bolts.
9. Use the **SST** to align the switch on the shaft and case.
10. Tighten the two mounting bolts.

Tightening torque
11—13 N·m {112—133 kgf·cm, 96—117 in·lbf}

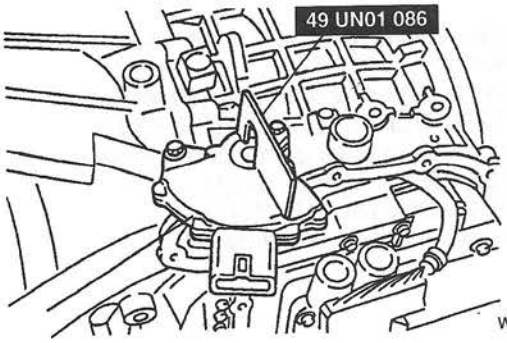

W6U517WAX

11. Connect the transaxle range switch connector.
12. Install the air cleaner component, fresh-air duct. (Refer to 01–13A INTAKE-AIR SYSTEM REMOVAL/INSTALLATION [FS].)
13. Install the battery component. (Refer to 01–17 BATTERY REMOVAL/INSTALLATION.)
14. Connect the negative battery cable.

O/D OFF SWITCH INSPECTION [LA4A-EL]

W6U517W41

Refer to 05–17B O/D OFF SWITCH INSPECTION [GF4A-EL].

O/D OFF SWITCH REMOVAL/INSTALLATION [LA4A-EL]

W6U517W42

Refer to 05–17B O/D OFF SWITCH REMOVAL/INSTALLATION [GF4A-EL].

VEHICLE SPEEDOMETER SENSOR INSPECTION [LA4A-EL]

W6U517W43

1. Remove the vehicle speedometer sensor. (Refer to 05–17A VEHICLE SPEEDOMETER SENSOR REMOVAL/INSTALLATION [LA4A-EL].)

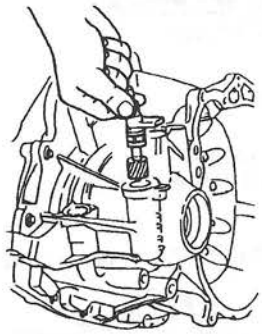
W6U517WFA

2. Measure the voltage between terminals of the vehicle speedometer sensor while rotating the driven gear.

Meter needle	Action
Moves slightly under 5 V	Repair wiring harness (Instrument cluster—Vehicle speedometer sensor)
Does not move	Replace vehicle speedometer sensor

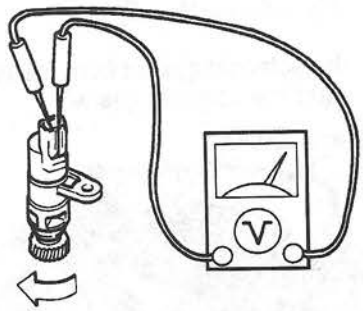

W6U517WDH

3. Install the vehicle speedometer sensor. (Refer to 05–17A VEHICLE SPEEDOMETER SENSOR REMOVAL/INSTALLATION [LA4A-EL].)

VEHICLE SPEEDOMETER SENSOR REMOVAL/INSTALLATION [LA4A-EL]

W6U517W44

1. Disconnect the negative battery cable.
2. Remove the battery component. (Refer to 01–17 BATTERY REMOVAL/INSTALLATION.)
3. Remove the air cleaner component. (Refer to 01–13A INTAKE-AIR SYSTEM REMOVAL/INSTALLATION [FS].)
4. Disconnect the vehicle speedometer sensor connector.
5. Remove the vehicle speedometer sensor.

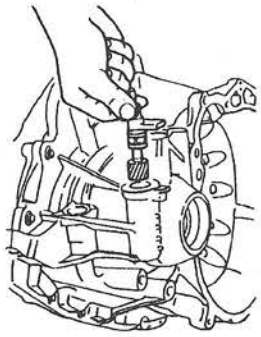

W6U517WFA

6. Apply ATF to a new O-ring and install it on a new vehicle speedometer sensor.
7. Install the vehicle speedometer sensor.

Tightening torque
5—6 N·m {50—61 kgf·cm, 44—53 in·lbf}

8. Connect the vehicle speedometer sensor connector.
9. Install the battery component. (Refer to 01–17 BATTERY REMOVAL/INSTALLATION.)
10. Install the air cleaner component. (Refer to 01–13A INTAKE-AIR SYSTEM REMOVAL/INSTALLATION [FS].)
11. Connect the negative battery cable.

SOLENOID BODY REMOVAL/INSTALLATION [LA4A-EL]

W6U517W45

1. Remove the control valve body. (Refer to 05–17A CONTROL VALVE BODY AND TERMOSTATIC OIL LEVEL CONTROL VALVE REMOVAL/INSTALLATION [LA4A-EL].)
2. Remove the solenoid body component.

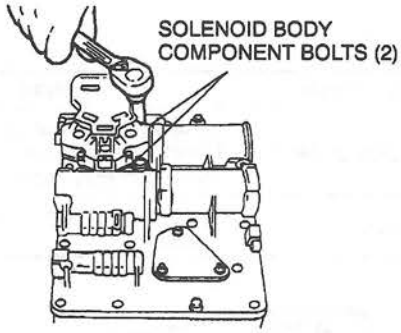

W6U517WFC

3. Remove the solenoid gasket from the accumulator body. Discard the solenoid gasket.

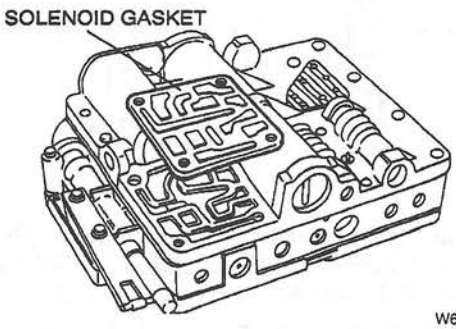

W6U517WFD

4. Install the solenoid body and a new gasket on the accumulator body.

Note
- Match the solenoid body gasket to the passages.

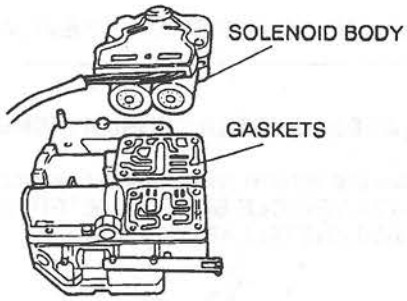

W6U517EFE

5. Install the bolts.

Tightening torque
10 N·m {1.1 kgf·m, 7 ft·lbf}

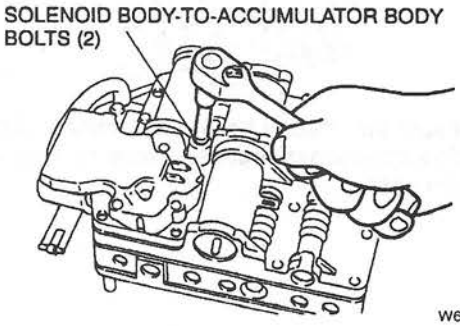

W6U517WFF

6. Install the control valve body. (Refer to 05–17A CONTROL VALVE BODY AND TERMOSTATIC OIL LEVEL CONTROL VALVE REMOVAL/INSTALLATION [LA4A-EL].)
7. Carry out the time lag test and line pressure test. (Refer to 05–17A MECHANICAL SYSTEM TEST [LA4A-EL], Line Pressure Test.)

8. Carry out the road test. (Refer to 05–17A ROAD TEST [LA4A-EL].)

TURBINE SHAFT SPEED SENSOR REMOVAL/INSTALLATION [LA4A-EL]

W6U517W46

1. Disconnect the negative battery cable.
2. Remove the wheel and tire. (drivers sheets side.)
3. Remove the splash shield.
4. Disconnect the turbine shaft speed sensor connector.
5. Remove the turbine shaft speed sensor.
6. Apply ATF to a new O-ring and install it on a new turbine shaft speed sensor.
7. Install the turbine shaft speed sensor.

Tightening torque
13 N·m {1.3 kgf·cm, 10 ft·lbf}

8. Connect the turbine shaft speed sensor connector.
9. Install the splash shield.
10. Install the wheel and tire. (drivers sheets side)
11. Connect the negative battery cable.

TRANSAXLE FLUID TEMPERATURE SENSOR REMOVAL/INSTALLATION [LA4A-EL]

W6U517W47

Note
- Transaxle fluid temperature sensor (TFT) and solenoid valve are together as one unit, and are installed to the solenoid body. Refer to the SOLENOID BODY REMOVAL/INSTALLATION [LA4A-EL] procedure.

O/D OFF INDICATOR LIGHT INSPECTION [LA4A-EL]

W6U517W48

Refer to 05–17B O/D OFF INDICATOR LIGHT INSPECTION [GF4A-EL].

POWERTRAIN CONTROL MODULE INSPECTION [LA4A-EL]

W6U517W37

Note
- For **PID/DATA Monitor and Record**, refer to 01–40A POWERTRAIN CONTROL MODULE (PCM) INSPECTION [FS].

POWERTRAIN CONTROL MODULE REMOVAL/INSTALLATION [LA4A-EL]

W6U517W38

Refer to 01–40A POWERTRAIN CONTROL MODULE (PCM) REMOVAL/INSTALLATION [FS].

AUTOMATIC TRANSAXLE REMOVAL/INSTALLATION [LA4A-EL]

W6U517W07

Note

- The oil pan could contain small chips, shavings, and other particles helpful in checking the condition of the transaxle and diagnosing certain problems. To ensure that all foreign particles stay in the oil pan, make sure that the transaxle is never tipped completely over while the oil pan is still installed.

1. Disconnect the negative battery cable.
2. Drain the ATF into a container. (Refer to 05–17A AUTOMATIC TRANSAXLE FLUID (ATF) REPLACEMENT [LA4A-EL].)
3. Remove the battery component. (Refer to 01–17 BATTERY REMOVAL/INSTALLATION.)
4. Remove the fresh-air duct, air cleaner component. (Refer to 01–13A INTAKE-AIR SYSTEM REMOVAL/INSTALLATION [FS].)
5. Remove the front wheel and tire.
6. Remove the splash shield.
7. Remove in the order indicated in the table.
8. After removal, remove the oil pan to check the condition of the transaxle.
9. Install in the reverse order of removal.
10. Install the splash shield.
11. Install the wheel and tire.
12. Install the fresh-air duct, air cleaner component. (Refer to 01–13A INTAKE-AIR SYSTEM REMOVAL/INSTALLATION [FS].)
13. Install the battery component. (Refer to 01–17 BATTERY REMOVEL/INSTALLATION.)
14. Fill the transaxle with the specified ATF after installation. (Refer to 05–17A AUTOMATIC TRANSAXLE FLUID (ATF) REPLACEMENT [LA4A-EL].)
15. Check for leakage of ATF from all connecting points.
16. Connect the negative battery cable.
17. Check the operation of the transaxle range switch. (Refer to 05–17A ELECTRICAL SYSTEM COMPONENTS [LA4A-EL].)
18. Check the operation of the selector lever. (Refer to 05–18 SELECTOR LEVER INSPECTION.)
19. Carry out the mechanical system test. (Refer to 05–17A MECHANICAL SYSTEM TEST [LA4A-EL].)

Service item	Test item		
	Line pressure test	Stall test	Time lag test
Automatic transaxle replacement	○		
Automatic transaxle overhaul	○	○	○
Torque converter replacement	○	○	
Oil pump replacement	○		
Clutch system replacement	○		
Differential replacement	○		

20. Carry out the road test. (Refer to 05–17A ROAD TEST [LA4A-EL].)

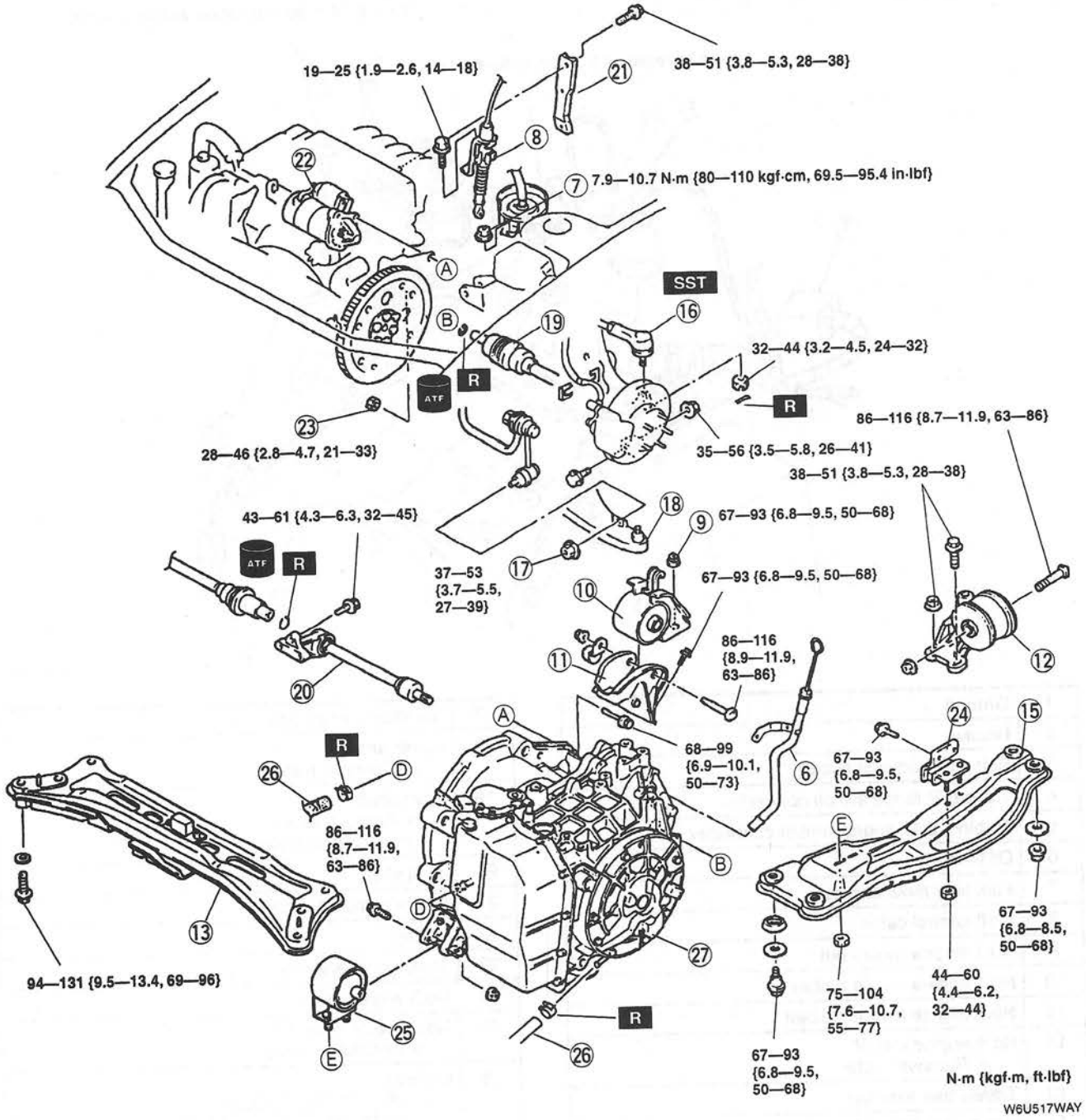
19—25 {1.9—2.6, 14—18}
38—51 {3.8—5.3, 28—38}
21
8
22
7 7.9—10.7 N·m {80—110 kgf·cm, 69.5—95.4 in·lbf}
A
SST
16
B
19
32—44 {3.2—4.5, 24—32}
R
ATF
R
23
28—46 {2.8—4.7, 21—33}
35—56 {3.5—5.8, 26—41}
86—116 {8.7—11.9, 63—86}
38—51 {3.8—5.3, 28—38}
43—61 {4.3—6.3, 32—45}
18
9
67—93 {6.8—9.5, 50—68}
ATF
R
17
37—53
{3.7—5.5,
27—39}
67—93 {6.8—9.5, 50—68}
10
12
20
11
86—116
{8.9—11.9,
63—86}
A
24
15
R
26
D
68—99
{6.9—10.1,
50—73}
6
67—93
{6.8—9.5,
50—68}
E
86—116
{8.7—11.9,
63—86}
B
D
13
67—93
{6.8—8.5,
50—68}
94—131 {9.5—13.4, 69—96}
27
44—60
{4.4—6.2,
32—44}
75—104
{7.6—10.7,
55—77}
25
R
E
26
67—93
{6.8—9.5,
50—68}
N·m {kgf·m, ft·lbf}
W6U517WAY

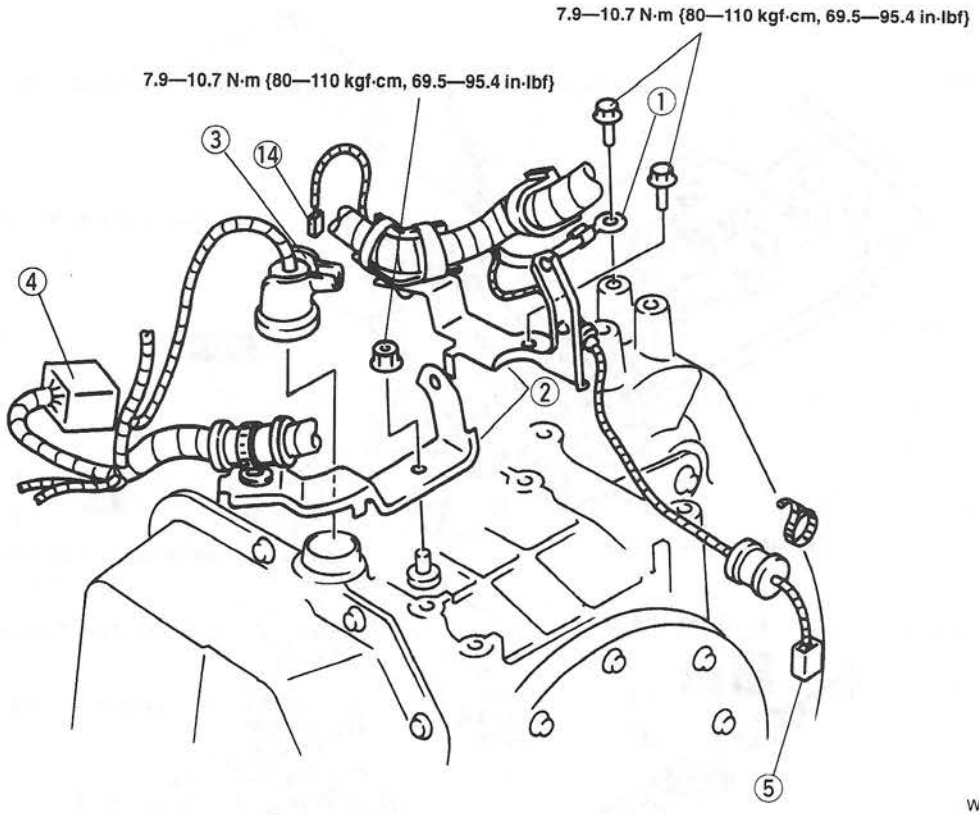

W6U517WAZ

1	Ground
2	Bracket
3	Solenoid body connector
4	Transaxle range switch connector
5	Turbine shaft speed sensor connector
6	Oil filler tube
7	Fuel filter mounting nut
8	Shift control cable
9	No.1 engine mount nut
10	No.1 engine mount rubber
11	No.1 engine mount bracket
12	No.4 engine mount ☞ Removal Note
13	Transverse member
14	Vehicle speedometer sensor connector
15	Engine mounting member ☞ Installation Note
16	Tie-rod end ☞ Removal Note ☞ Installation Note

17	Stabilizer control link
18	Lower arm ☞ Removal Note
19	Drive shaft ☞ Removal Note ☞ Installation Note
20	Joint shaft
21	Intake manifold bracket
22	Starter
23	Torque converter nut
24	No.5 engine mount
25	No.2 engine mount ☞ Installation Note
26	Oil hose ☞ 05–17A OIL COOLER REMOVAL/INSTALLATION
27	Transaxle ☞ Removal Note

No.4 Engine Mount Removal Note

Caution
- **To prevent damage to the body, insert a rag into the gap between the fender and body, when installing the SST.**

1. Support the engine by using the **SST** before removing the engine mounting member.



W6U517WB0

2. Remove the No.4 engine mount.

Tie-Rod End Removal Note

Caution
- **The sharp edges of the SST can slice the tie-rod end dust boot. Install the SST so that the sharp edges are between the dust boot and the tie rod.**

1. Remove the cotter pin and nut.
2. Disconnect the tie rod end from the knuckle by using the **SST**.

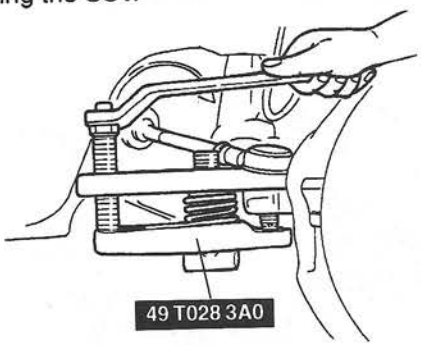

W6U517WB1

Lower Arm Removal Note

1. Remove the clinch bolt from the lower arm ball joint.

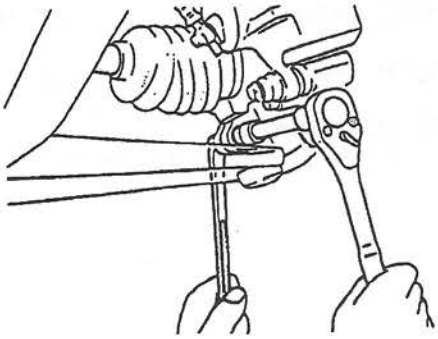
W6U517WB2

Caution
- **Wrap a rag around the ball joint dust seal to protect it from damage.**

2. Wrap a rag around the ball joint dust boot.
3. Pry the lower arm out of the knuckle.

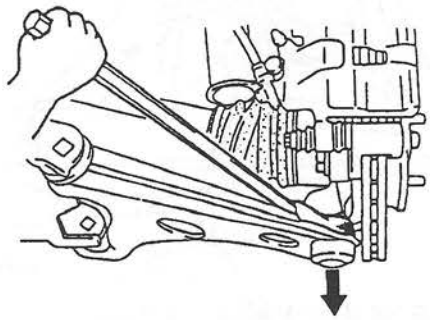
W6U517WB3

Drive Shaft Removal Note

1. Remove the clip.
2. Remove the ABS wheel speed sensor harness mounting nuts.

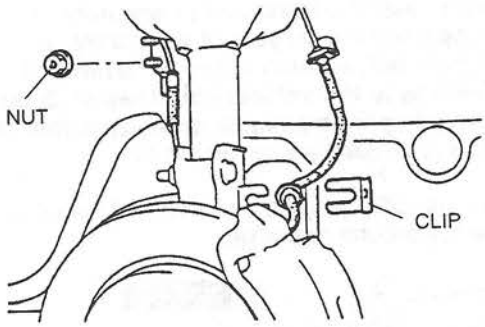

W6U517WB4

3. Separate the driver side drive shaft from the joint shaft by using a brass bar and a hammer.

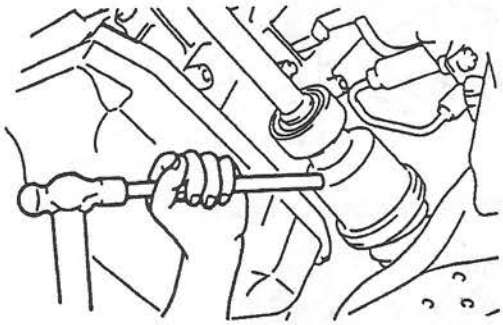
W6U517WB5

Caution
- **The sharp edges of the drive shaft snap ring can slice or puncture the oil seal. Be careful when removing the drive shaft from the transaxle.**

Note
- Do not pry on the seal surface.

4. Separate the passenger side drive shaft from the transaxle by prying with a bar inserted between the outer ring and the transaxle, as shown in the figure.

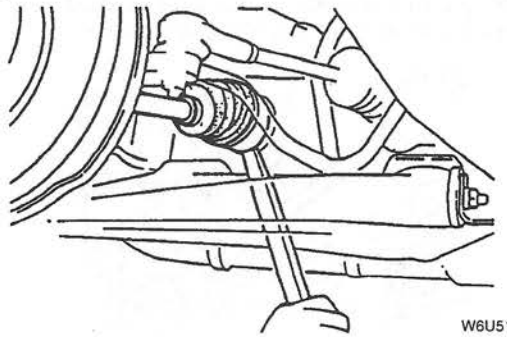
W6U517WB6

5. Suspend the drive shaft with a rope.

Transaxle Removal Note

Warning
- **Do not allow the transaxle to fall from the jack.**
- **Verify that the transaxle is securely supported by the jack. If the transaxle should fall, serious injury or death and damage to the vehicle could result. Before removing the transaxle make sure that the jack is securely supporting it.**

1. Loosen the **SST** (engine support) and lean the engine toward the transaxle.

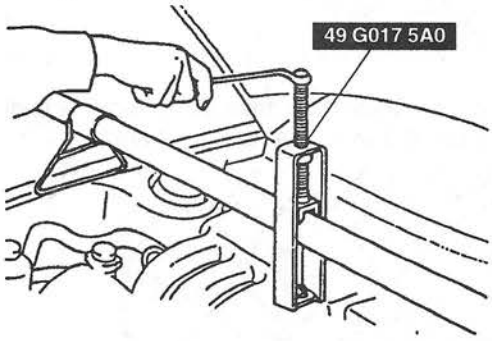

W6U517WB7

2. Support the transaxle on a jack.

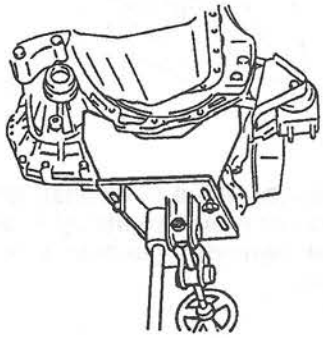
W6U517WB8

3. Remove the transaxle mounting bolts.
4. Remove the transaxle.

Transaxle Installation Note

Warning
- **Do not allow the transaxle to fall from the jack.**
- **Verify that the transaxle is securely supported by the jack. If the transaxle should fall, serious injury or death and damage to the vehicle could result. Before removing the transaxle make sure that the jack is securely supporting it.**

1. Set the transaxle on a jack and lift it into place.

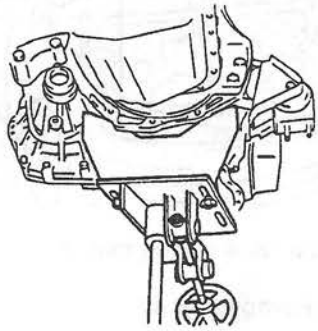
W6U517WB9

2. Install the transaxle mounting bolts.

Tightening torque
A: 90—116 N·m
{9.1—11.9 kgf·m, 66—86 ft·lbf}
B: 38—51 N·m
{3.8—5.5 kgf·m, 28—38 ft·lbf}
C: 19—25 N·m
{1.9—2.6 kgf·m, 14—18 ft·lbf}

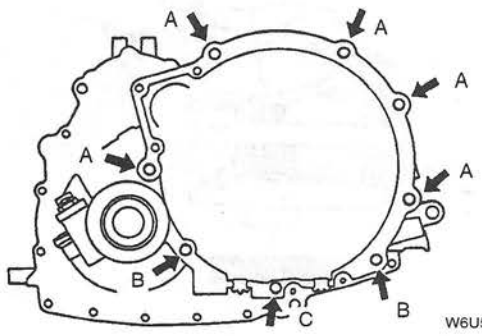

W6U517WBA

3. Install the torque converter nuts.

Tightening torque
28—46 N·m {2.8—4.7 kgf·m, 21—33 ft·lbf}

4. Hand tighten the No.4 engine mount nuts.

Joint Shaft Installation Note
1. Remove the **SST** from the transaxle case.

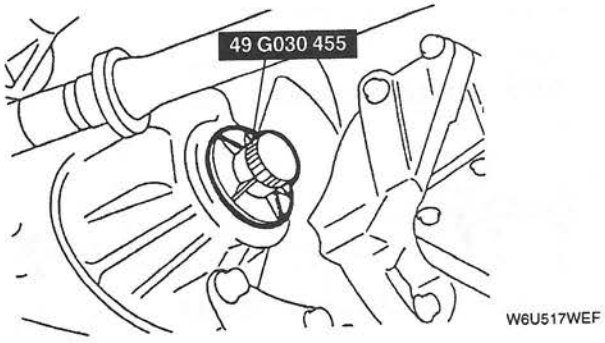

W6U517WEF

2. Verify that there is no damage to the oil seal.
3. Hand tighten A bolts.
4. Tighten the A, B bolts to the specified torque.

Tightening torque
43—61 N·m {4.3—6.3 kgf·m, 32—45 ft·lbf}

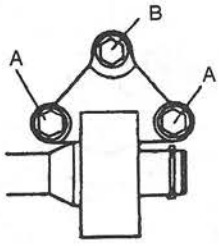

W6U517WFB

Drive Shaft Installation Note
Refer to 03–13 JOINT SHAFT REMOVAL/INSTALLATION, Clip Installation Note.

Lower Arm Installation Note
1. Connect the lower arm to the knuckle and tighten the clinch bolt.

Tightening torque
37—53 N·m {3.7—5.5 kgf·m, 27—39 ft·lbf}

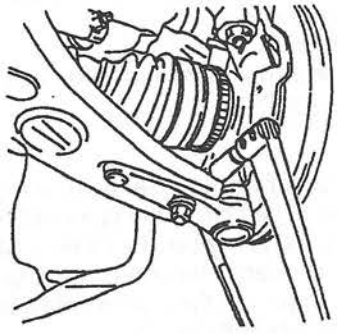
W6U517WBB

2. Install the ABS wheel speed sensor harness mounting nuts.

Tightening torque
7.9—10.7 N·m
{80—110 kgf·cm, 69.5—95.4 in·lbf}

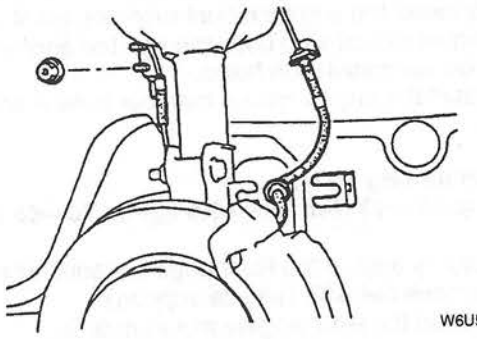
W6U517WBC

3. Install the clip.

Tie Rod End Installation Note
1. Install the locknut.

Tightening torque
32—44 N·m {3.2—4.5 kgf·m, 24—32 ft·lbf}

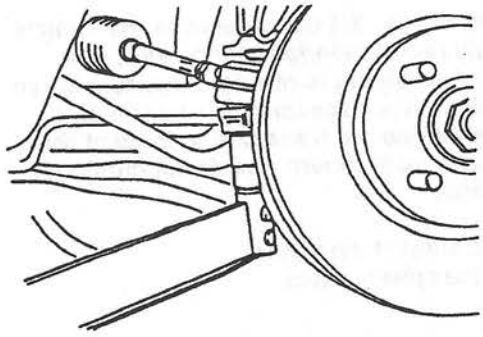
W6U517WBD

2. Secure the locknut by using a new cotter pin.

No.2 Engine Mount, Engine Mount Member Installation Note
1. Position the direction indicator on engine mount member bushings facing toward the front side, and install the bushings onto the engine mount member.

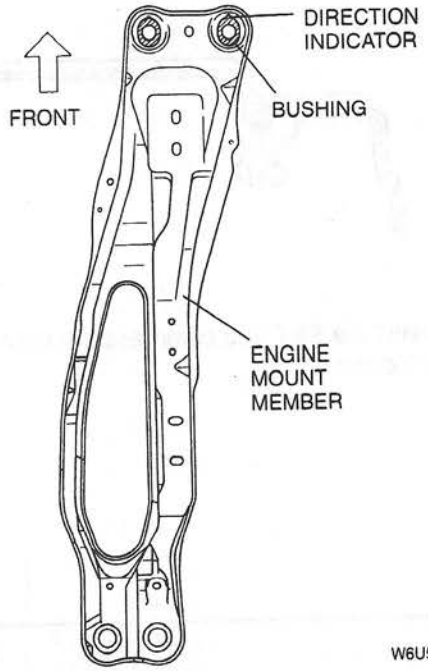

W6U517WF8

2. To install the engine mount member, put the No.2 engine mount stud bolts through the engine mount member installation holes.
3. Install the engine mount member bolts A and nuts A.

Tightening torque
A: 67—93 N·m {6.8—9.5 kgf·m, 50—68 ft·lbf}

4. Loosely tighten the No.2 engine mount nuts B.
5. Remove the **SST** (engine support).
6. Tighten the No.2 engine mount nuts B.

Tightening torque
B: 75—104 N·m {7.6—10.7 kgf·m, 55—77 ft·lbf}

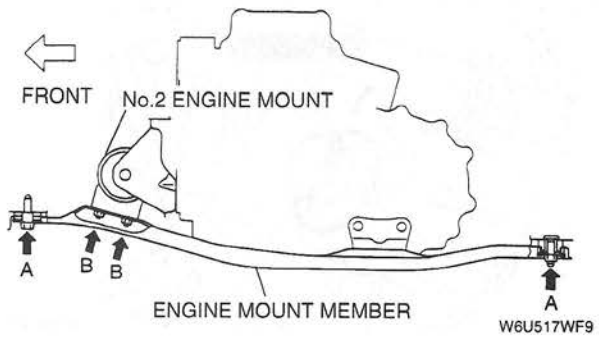

W6U517WF9

2/4 BAND SERVO REMOVAL/INSTALLATION

Caution
- **Servicing the 2/4 band servo in the vehicle is only recommended in the event of a leak. If servicing is required due to a servo problem, it is necessary to remove and disassemble the transaxle to inspect the 2/4 band component and direct clutch for damage.**

1. Raise and support the vehicle.
2. Remove the splash shield.

Warning
- **The servo cover is under high spring pressure.**

3. Install a nut with an integral washer onto the forcing bolt of the servo cover remover/replacer tool with a permanent thread sealer. This nut and washer will aid in the installation of the cover.

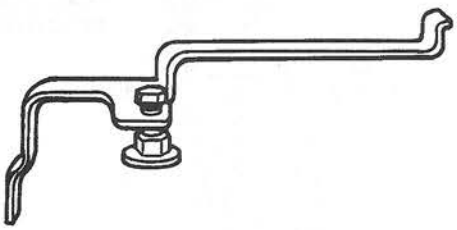
W6U517WBJ

4. Install the **SST** and compress the servo cover component.

W6U517W08

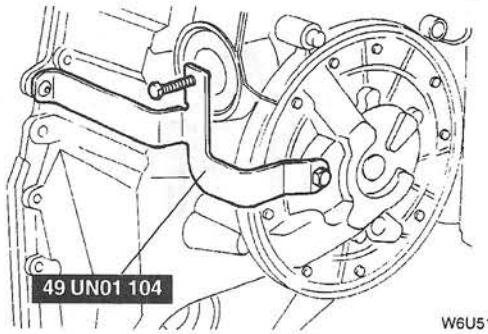

W6U517WBK

5. Remove the servo cover retaining ring and release the tension on the servo cover component slowly.
6. After releasing all of the tension on the servo cover component, remove the **SST**.
7. Remove the servo cover component, 2/4 servo piston and return spring.
8. Lubricate the 2/4 servo piston, servo cover, servo cover seal, and servo case bore using ATF or petroleum jelly to aid in the installation and prevent cutting of the seal.
9. Install the 2/4 servo piston and return spring into the transaxle case.
10. Install the **SST**.
11. Tighten the center screw to compress the 2/4 servo into the bore.

Note
- If the cover will not seat deep enough in the bore to install the servo cover retaining ring, a blunt punch may be used with a small hammer. Gently tap the cover around the outer edge with the punch until the snap ring groove is fully exposed.

12. Install the servo cover retaining ring into transaxle case.
13. Remove the **SST**.
14. Lower the vehicle. Check the fluid level prior to road testing.

CONTROL VALVE BODY AND TERMOSTATIC OIL LEVEL CONTROL VALVE REMOVAL/INSTALLATION [LA4A-EL]

W6U517W09

Caution
- **Clean the transaxle exterior thoroughly with a steam cleaner or cleaning solvents before removal.**

1. Disconnect the negative battery cable.
2. Drain the ATF. (Refer to 05–17A AUTOMATIC TRANSAXLE FLUID (ATF) REPLACEMENT [LA4A-EL].)
3. Remove the battery component. (Refer to 01–17 BATTERY REMOVAL/INSTALLATION.)
4. Remove the fresh-air duct, air cleaner component. (Refer to 01–13A INTAKE-AIR SYSTEM REMOVAL/INSTALLATION [FS].)
5. Remove the wheel and fire.
6. Remove the splash shield.
7. Disconnect the transaxle range (TR) switch connector.
8. Disconnect the solenoid body connector.
9. Remove the oil hose. (Refer to 05–17A OIL COOLER REMOVAL/INSTALLATION [LA4A-EL].)
10. Remove the control valve body cover.
11. Remove the control valve body mounting bolts.

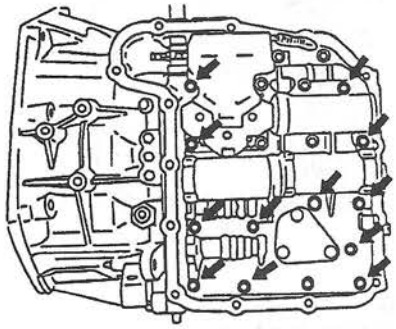

W6U517WBL

Caution
- **Do not pull on the connector wires or use a hammer on the connector.**

12. Remove the control valve body component.

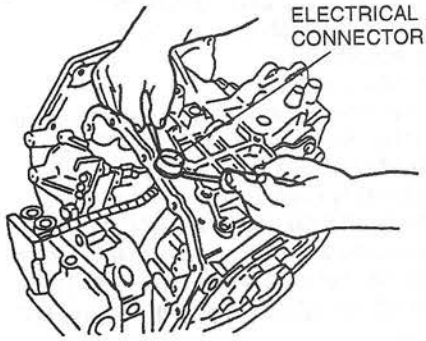

W6U517WCR

13. If the thermostatic oil level control valve must be removed, remove the bolt and the bracket. Pull the thermostatic oil level control valve straight out of the transaxle case.

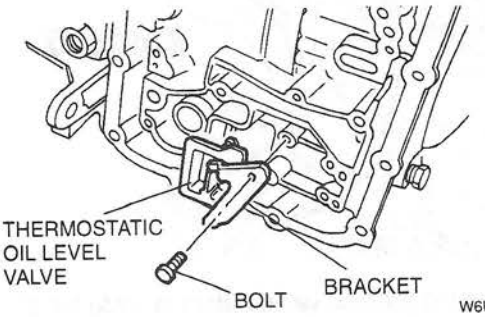

W6U517WBM

14. If the thermostatic oil level control valve was removed, insert it into the transaxle case and install the bracket and bolt.

Tightening torque
11—13 N·m
{112—133 kgf·cm, 97—115 in·lbf}

15. Install a new O-ring on the solenoid electrical connector and lightly coat the O-ring with petroleum jelly.

Caution
- **Do not pull wires or damage connector body.**

16. Place the control valve body slightly away from the transaxle case and push the solenoid body connector into its bore.
17. Align the Z-link in the manual valve.
18. Install the 12 mounting bolts. Tighten the mounting bolts in the sequence shown.

Tightening torque
9—11 N·m {92—112 kgf·cm, 80—97 in·lbf}

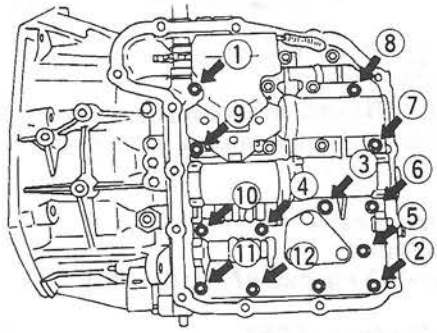

W6U517WBN

19. Loosen the nut on the ball stud for the manual valve detent actuating rod.
20. Remove the manual lever control shaft outer lever.
21. Use the **SST** to move the shaft to the D range position and install the pin to hold the tool in position.

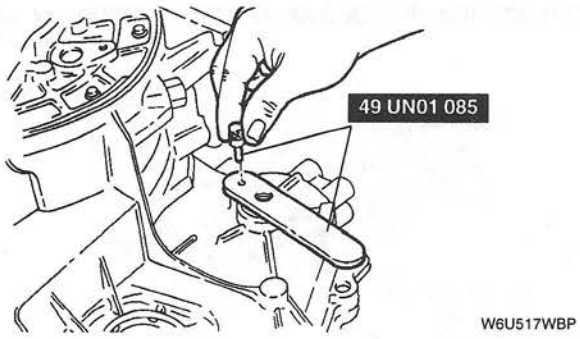

22. Move the manual valve detent lever to the D range position.

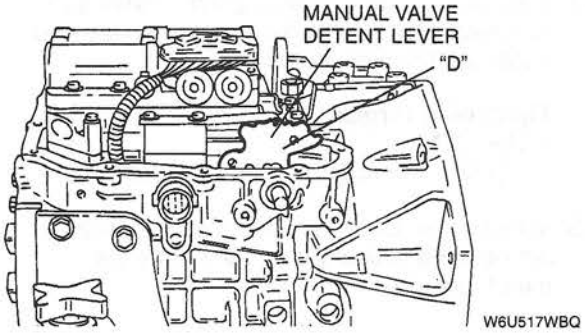

23. Loosen the nut on the ball stud for the manual valve detent lever actuating rod component.

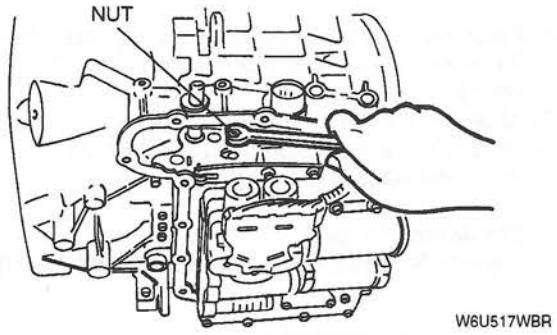

24. Initially tighten the nut on the ball. Remove the shifter pin.
25. Rotate the **SST** until the socket can be installed on the nut. Tighten the manual valve detent lever ball stud nut.

Tightening torque
11—13 N·m
{112—133 kgf·cm, 97—115 in·lbf}

26. Remove the pin and **SST**.
27. Install the manual control lever component and bolt.

Tightening torque
24—30 N·m {2.4—3.1 kgf·m, 18—22 ft·lbf}

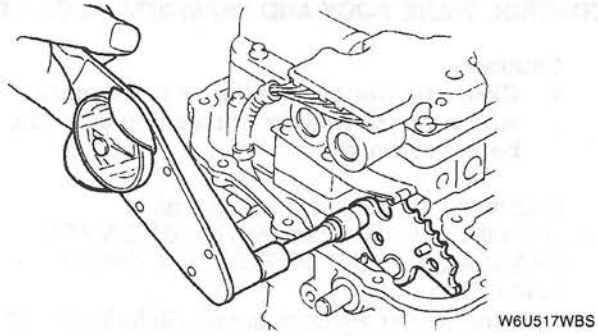

28. Install the control valve body cover gasket on the case. Attach the cover to the case.
29. Install the fourteen mounting bolts in the sequence shown.

Tightening torque
14—18 N·m
{143—184 kgf·cm, 124—159 in·lbf}

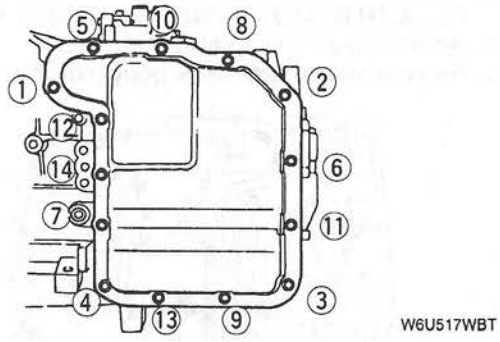

Caution
- **If reusing the hose clamp, position it in the original location on the hose and squeeze the clamp lightly with large pliers to ensure a tight fit.**

30. Install the oil hose. (Refer to 05–17A OIL COOLER REMOVAL/INSTALLATION [LA4A-EL].)
31. Connect the solenoid body connector.
32. Connect the TR switch connector.
33. Install the splash shild.
34. Install the wheel and tire.
35. Install the fresh-air duct, air cleaner component. (Refer to 01–13A INTAKE-AIR SYSTEM REMOVAL/INSTALLATION [FS].)
36. Install the battery component. (Refer to 01–17 BATTERY REMOVAL/INSTALLATION.)
37. Fill the transaxle with the specified ATF after installation. (Refer to 05–17A AUTOMATIC TRANSAXLE FLUID (ATF) REPLACEMENT [LA4A-EL].)
38. Check for leakage of ATF from all connecting points.
39. Connect the negative battery cable.
40. Carry out the mechanical system test. (Refer to 05–17A MECHANICAL SYSTEM TEST [LA4A-EL].)
41. Carry out the road test. (Refer to 05–17A ROAD TEST [LA4A-EL].)

OIL SEALS REMOVAL/INSTALLATION [LA4A-EL]

1. Remove the drive shaft and joint shaft. (Refer to 05–17A AUTOMATIC TRANSAXLE REMOVAL/INSTALLATION [LA4A-EL].)
2. Remove the differential seals using the **SSTs** or equivalent.

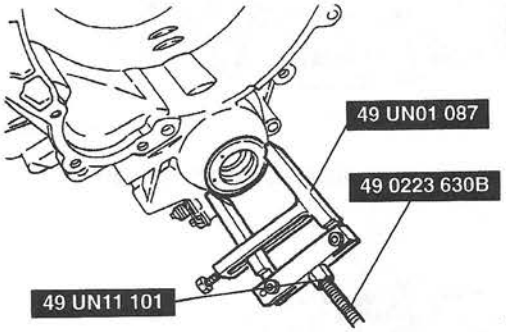

W6U517WBU

3. Apply a thin coat of petroleum jelly on the outside and the lip of the new differential seals.

W6U517W10

4. Use the **SST** to tap in the differential seals.

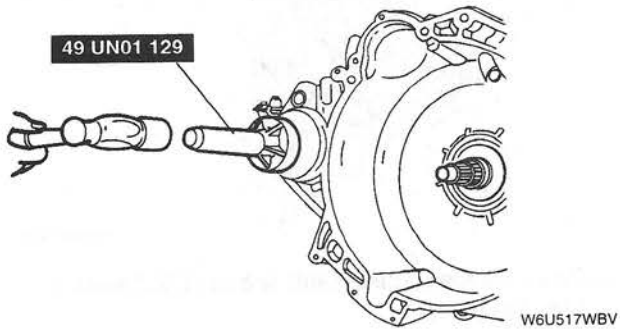

W6U517WBV

5. Install the drive shaft and joint shaft. (Refer to 05–17A AUTOMATIC TRANSAXLE REMOVAL/INSTALLATION [LA4A-EL].)

OIL PUMP BODY SEAL REMOVAL/INSTALLATION [LA4A-EL]

W6U517W11

Issue
Some vehicles leak fluid from the pump-to-case interface area of the transaxle. This may be caused by the pump body seal being rolled or pinched during installation.

Action
If a fluid leak is detected in the pump-to-case interface area, refer to the following service procedure to replace the pump body seal.

Caution
- **This procedure does not require complete teardown of the transaxle and should only be used for leak concerns. If replacement of the pump body or pump support is required, the transaxle must be disassembled and reassembled. The components will be misaligned if this repair is performed while the transaxle is still in the vehicle.**

1. Remove the transaxle. (Refer to 05–17A AUTOMATIC TRANSAXLE REMOVAL/INSTALLATION [LA4A-EL].)
2. Remove the torque converter from the transaxle and drain.
3. Remove the transaxle drain plug from the transaxle case. Allow the transaxle to drain completely.

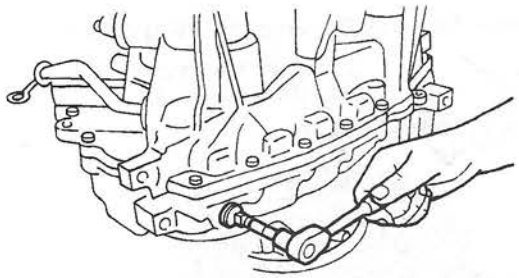

W6U517WBW

4. Remove the pump drive shaft.

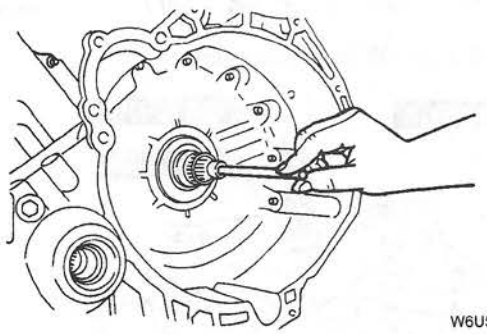

W6U517WBX

5. Position the transaxle with the pump facing up and remove the TSS sensor mounting bolt.


W6U517WBY

6. Separate the turbine shaft speed (TSS) sensor from the pump.

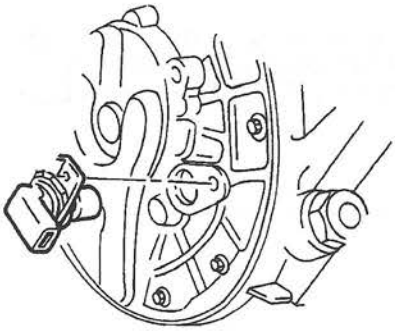
W6U517WBZ

7. Remove the nine (9) pump mounting bolts.

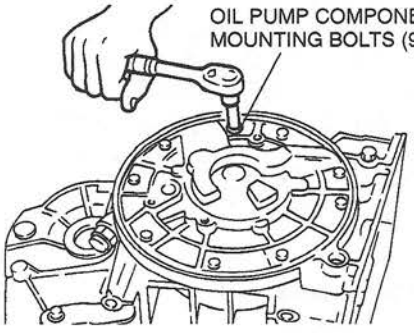

W6U517WC0

8. Install the **SSTs** on the pump.

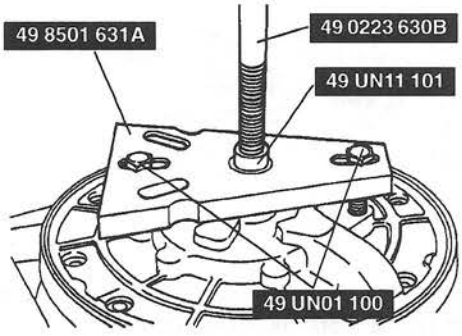

W6U517WC1

9. Install a large screwdriver through the TSS sensor hole. Do not locate the screwdriver on the reverse clutch hub tabs.
10. Remove the pump while holding the components into the case with the screwdriver. Remove the #1 thrust bearing. This bearing may be attached to the pump support or on the reverse clutch hub.

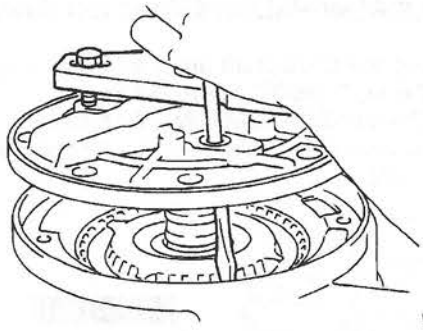
W6U517WC2

11. Remove the pump support mounting bolts.

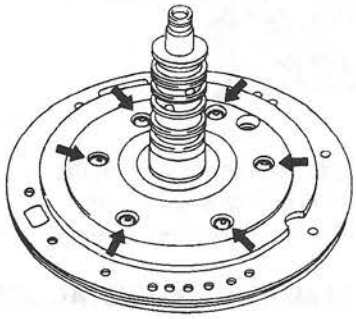
W6U517WC3

12. Remove the pump support.

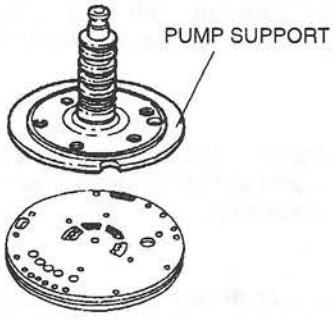

W6U517WC4

13. Remove the pump-to-case gasket and separator plate and discard the gasket.

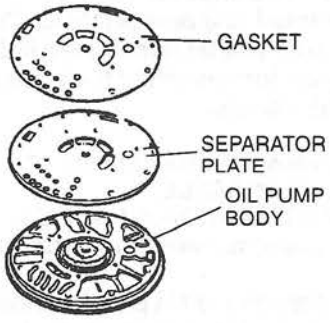

W6U517WC5

14. Remove the pump seal and discard it.

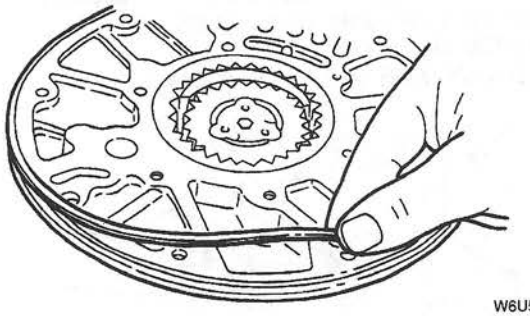

W6U517WC6

15. Install the **SST** in the holes. Use the bolt hole next to the TSS sensor hole and the bolt hole opposite it for the **SST**.

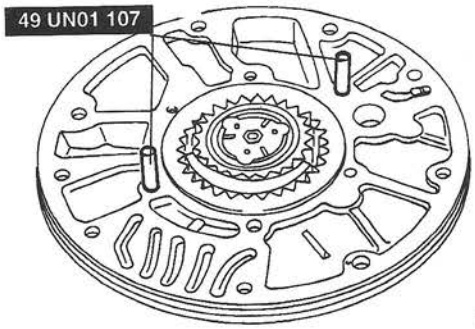

W6U517WC7

16. Install the separator plate and new gasket.

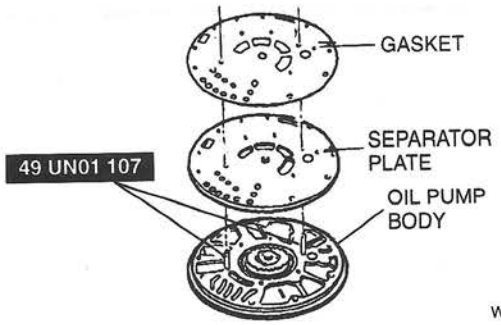

W6U517WC8

17. Install the pump support.

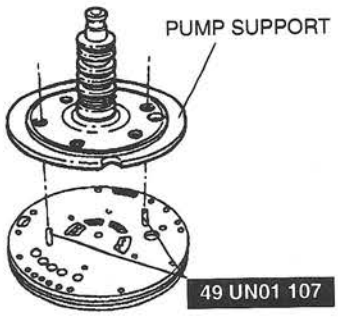

W6U517WC9

18. Install four (4) mounting bolts and tighten the bolts to **13 N·m {1.3 kgf·m, 10 ft·lbf}**.
19. Remove the **SST** and install and torque the remaining six (6) bolts to **13 N·m {1.3 kgf·m, 10 ft·lbf}**.

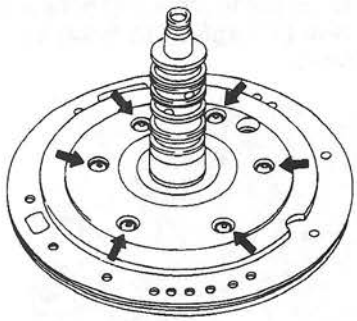

W6U517WCA

20. Install the new pump seal. Ensure that the white stripe is visible all around the pump.
21. Visually inspect the case flange for damage or burrs.

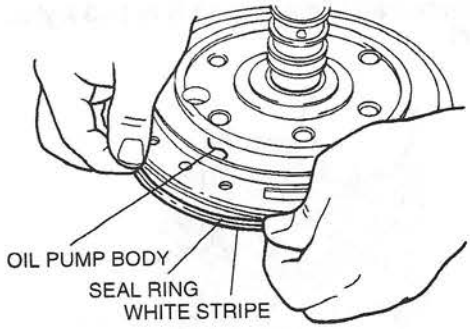

W6U517WCB

22. Lubricate the #1 thrust bearing with petroleum jelly and install on the pump support.

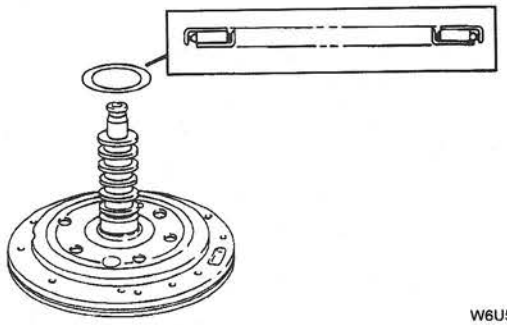

W6U517WCC

23. Lubricate the pump support seals and the pump bore in the case.
24. Lower the pump component into the case.

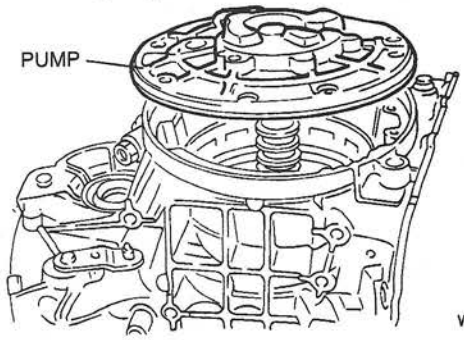

W6U517WCD

25. Install the nine (9) pump mounting bolts and torque to **13 N·m {1.3 kgf·m, 10 ft·lbf}** in sequence shown.

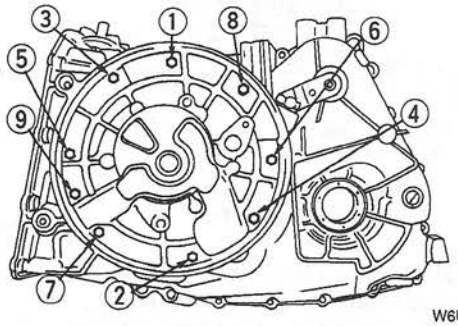

W6U517WCE

26. Install the turbine shaft speed (TSS) sensor and mounting bolt and tighten to **13 N·m {1.3 kgf·m, 10 ft·lbf}**.

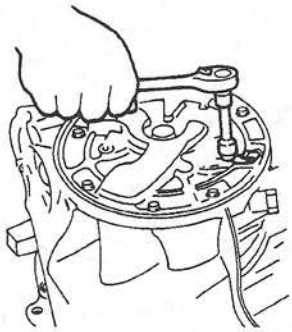

W6U517WCF

27. Install the pump drive shaft.
28. Install the torque converter into the transaxle.
29. Install the transaxle. (Refer to 05–17A AUTOMATIC TRANSAXLE REMOVAL/INSTALLATION [LA4A-EL].)

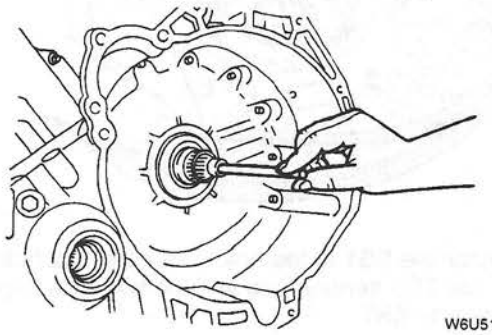

W6U517WCG

OIL COOLER REMOVAL/INSTALLATION [LA4A-EL]

W6U517W12

1. Disconnect the negative battery cable.
2. Diain the ATF. (Refer to 05–17A AUTOMATIC TRANSAXLE FLUID (ATF) REPLACEMENT [LA4A-EL].)
3. Remove in the order shown in the figure.
4. Install in the reverse order of removal.
5. Add ATF to the specified level. (Refer to 05–17A AUTOMATIC TRANSAXLE FLUID (ATF) REPLACEMENT [LA4A-EL].)
6. Connect the negative battery cable.
7. Inspect for oil leakage from the oil pipes and oil hoses.
8. Inspect the ATF level and condition. (Refer to 05–17A AUTOMATIC TRANSAXLE FLUID (ATF) INSPECTION [LA4A-EL].)
9. Carry out the line pressure test. (Refer to 05–17A MECHANICAL SYSTEM TEST [LA4A-EL], Line Pressure Test.)
10. Carry out the road test. (Refer to 05–17A ROAD TEST [LA4A-EL].)

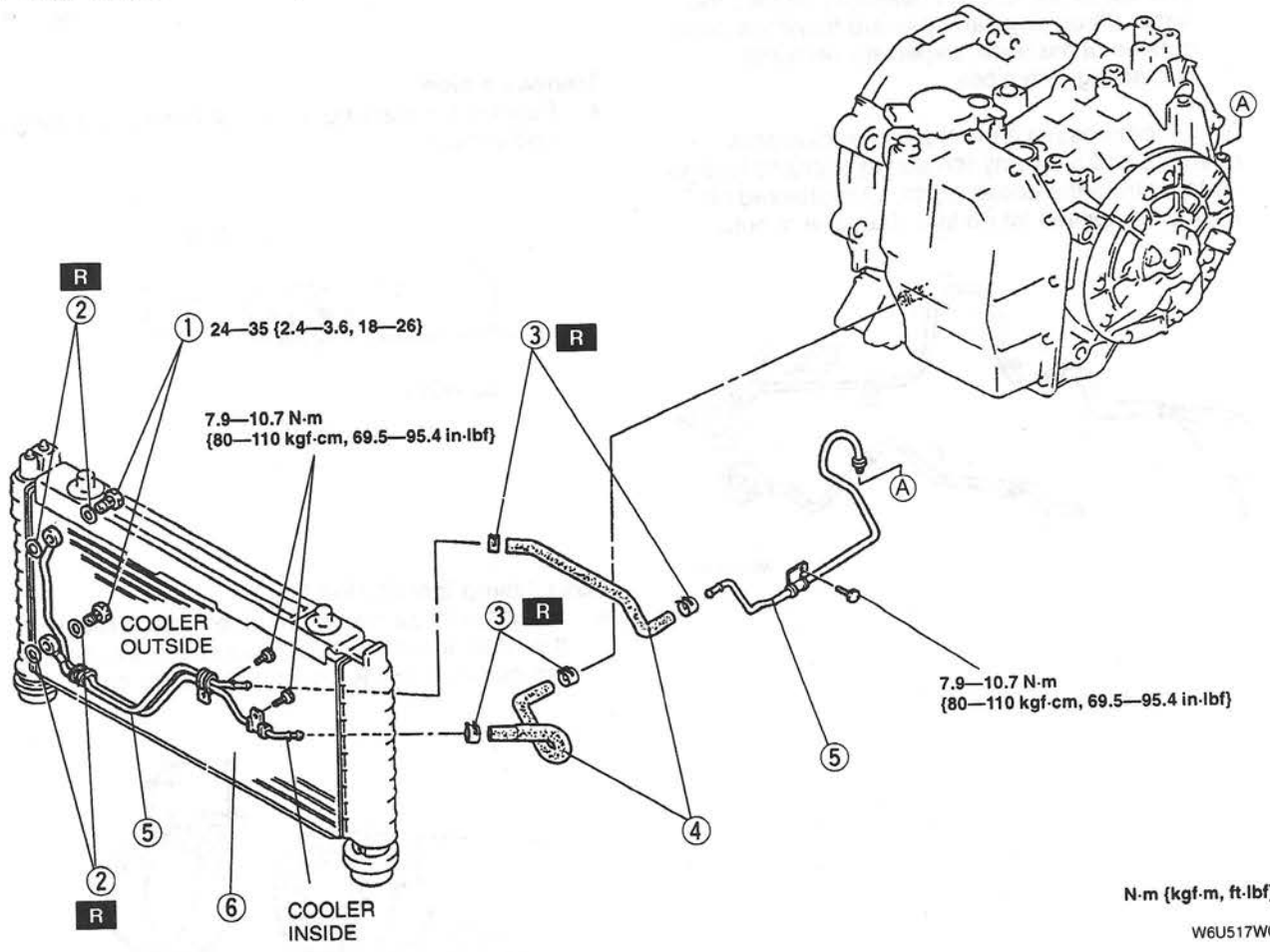

N·m {kgf·m, ft·lbf}

W6U517WCH

1	Connector bolts
2	Washers
3	Hose clamp ☞ Installation Note
4	Oil hose ☞ Installation Note

5	Oil pipe ☞ Installation Note
6	Radiator ☞ Installation Note

Radiator Installation Note

1. The automatic transaxle oil cooler flushing must be performed whenever a transaxle is removed for service to remove existing fluid which may be contaminated and to prevent contamination of new fluid. The flushing must be performed after installation of the overhauled replacement of the transaxle.
2. Follow the instruction in the manufacture's publication for flushing the automatic transaxle oil cooler.

Oil Pipe Installation Note

Note

- In order to prevent ATF leakage, replace the hose. When any damages are found inside or outside of the hose, especially on areas contacting with pipes.

- Apply compressed air to the cooler-side pipe opening, and blow any remaining dust and foreign material from the cooler pipes. Compressed air should be applied for no less than one minute.

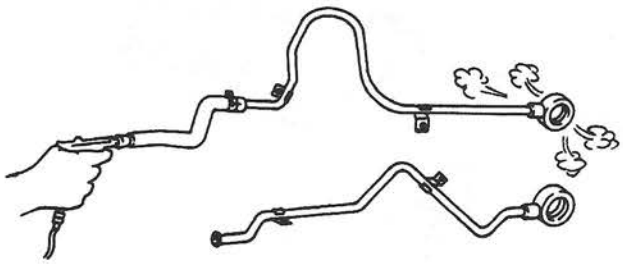

W6U517WCJ

Oil Hose Installation Note

Radiator side

- Align the marks, and slide the oil hose onto the oil pipe until it is fully seated as shown.

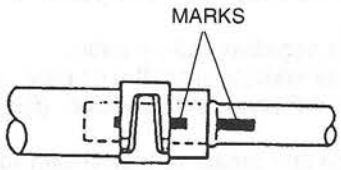

W6U517WCK

Transaxle side

- Position the marking on the oil hose side facing up and install it.

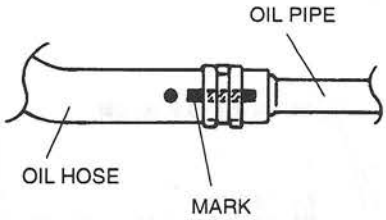

W6U517WCL

Hose Clamp Installation Note

- Install the hose clamp onto the hose. If reusing the hose, install the new hose clamp exactly into the mark left by the previous hose clamp.

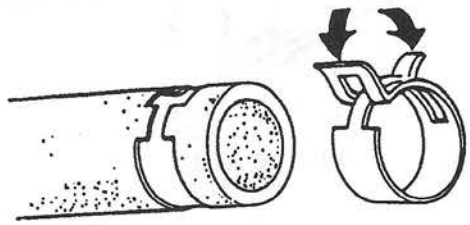

W6U517WCM

DRIVE PLATE REMOVAL/INSTALLATION [LA4A-EL]

W6U517W13

1. Remove in the order indicated in the table.
2. Install in the reverse order of removal.

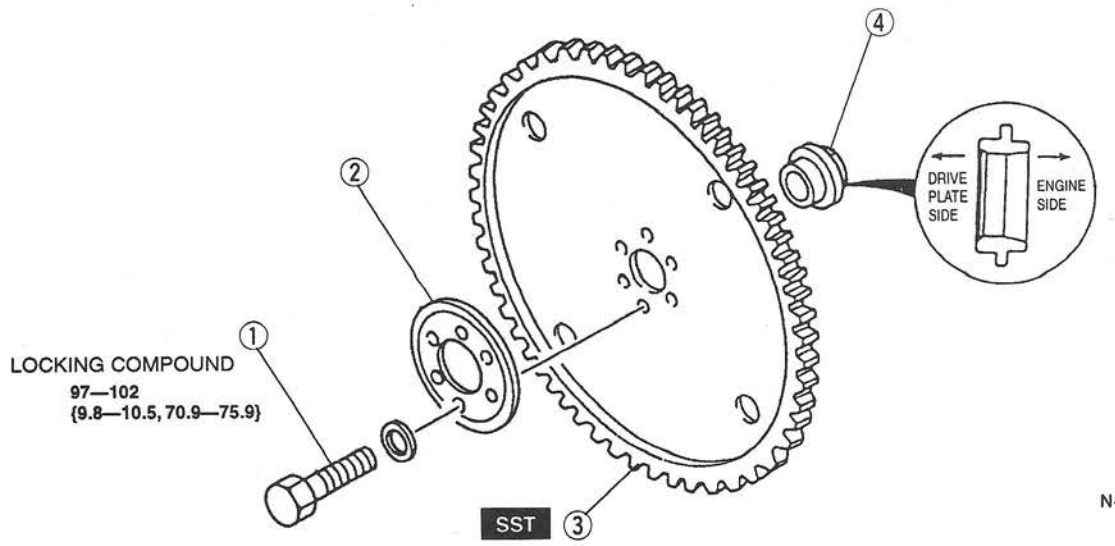

N·m {kgf·m, ft·lbf}

W6U517WCN

1	Drive plate mounting bolts ☞ Removal Note ☞ Installation Note
2	Backing plate
3	Drive plate
4	Adapter

Drive Plate Mounting Bolts Removal Note

1. Set the **SST** or equivalent against the drive plate.
2. Remove the bolts and the drive plate.

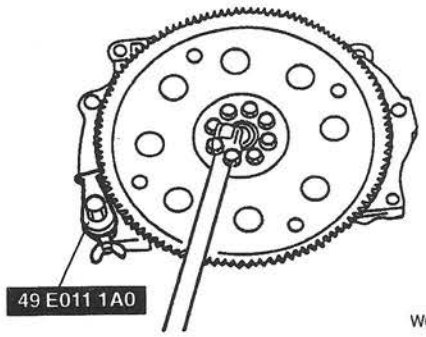

W6U517WCP

Drive Plate Mounting Bolts Installation Note

1. Remove any old locking compound from the bolt threads and bolt holes, and apply new locking compound to the bolt threads.
2. Set the **SST** or equivalent against the drive plate.
3. Tighten the drive plate mounting bolts in two or three steps in the order shown.

Tightening torque
97—102 N·m
{9.8—10.5 kgf·m, 70.9—75.9 ft·lbf}

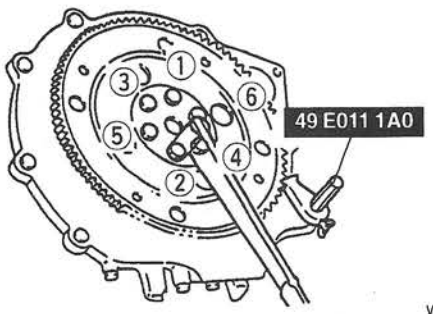

W6U517WCQ

05–17B AUTOMATIC TRANSAXLE [GF4A-EL]

MECHANICAL SYSTEM TEST [GF4A-EL] 05–17B–2
- Mechanical System Test Preparation . 05–17B–2
- Line Pressure Test 05–17B–2
- Stall Test 05–17B–3
- Time Lag Test 05–17B–4

ROAD TEST [GF4A-EL] 05–17B–4
- Road Test Preparation 05–17B–4
- Typical Shift Diagram 05–17B–4
- D Range Test 05–17B–5
- 2 Range Test 05–17B–7
- 1 Range Test 05–17B–7
- P Position Test 05–17B–8

AUTOMATIC TRANSAXLE FLUID (ATF) INSPECTION [GF4A-EL] 05–17B–8
- ATF Condition Inspection 05–17B–8
- ATF Level Inspection 05–17B–9

AUTOMATIC TRANSAXLE FLUID (ATF) REPLACEMENT [GF4A-EL] 05–17B–10

O/D OFF SWITCH INSPECTION [GF4A-EL] 05–17B–10
- Inspection of Operation 05–17B–10
- Inspection of Voltage 05–17B–10
- Inspection of Continuity 05–17B–10

O/D OFF SWITCH REMOVAL/INSTALLATION [GF4A-EL] 05–17B–11

TRANSAXLE RANGE SWITCH INSPECTION [GF4A-EL] 05–17B–11
- Inspection of Operation 05–17B–11
- Inspection of Continuity 05–17B–11

TRANSAXLE RANGE SWITCH REMOVAL/INSTALLATION [GF4A-EL] 05–17B–12

TRANSAXLE RANGE SWITCH ADJUSTMENT [GF4A-EL] 05–17B–13

TRANSAXLE FLUID TEMPERATURE SENSOR INSPECTION [GF4A-EL] 05–17B–13

TRANSAXLE FLUID TEMPERATURE SENSOR REMOVAL/INSTALLATION [GF4A-EL] 05–17B–14

INPUT/TURBINE SPEED SENSOR INSPECTION [GF4A-EL] 05–17B–14

INPUT/TURBINE SPEED SENSOR REMOVAL/INSTALLATION [GF4A-EL] 05–17B–15

VEHICLE SPEEDOMETER SENSOR INSPECTION [GF4A-EL] 05–17B–15

VEHICLE SPEEDOMETER SENSOR REMOVAL/INSTALLATION [GF4A-EL] 05–17B–16

SOLENOID VALVES INSPECTION [GF4A-EL] 05–17B–16
- Inspection of Resistance 05–17B–16
- Inspection of Operation 05–17B–16
- Inspection of Output Duty 05–17B–16

SOLENOID VALVE REMOVAL/INSTALLATION [GF4A-EL] 05–17B–17

O/D OFF INDICATOR LIGHT INSPECTION [GF4A-EL] 05–17B–17
- Inspection of Operation 05–17B–17
- Inspection of Voltage 05–17B–17
- Inspection of Continuity 05–17B–18

POWERTRAIN CONTROL MODULE INSPECTION [GF4A-EL] 05–17B–18

POWERTRAIN CONTROL MODULE REMOVAL/INSTALLATION [GF4A-EL] 05–17B–18

AUTOMATIC TRANSAXLE REMOVAL/INSTALLATION [GF4A-EL] 05–17B–19
- Selector Cable Removal Note 05–17B–22
- Lower Arm Removal Note 05–17B–22
- Tie-Rod End Removal Note 05–17B–22
- Drive Shaft Removal Note 05–17B–22
- Engine Mounting Member Removal Note 05–17B–23
- Torque Converter Nuts Removal Note 05–17B–23
- Transaxle Removal Note 05–17B–23
- Transaxle Installation Note 05–17B–24
- No.2 Engine Mount, Engine Mount Member Installation Note 05–17B–24
- No.1 Engine Mount Bolt Installation Note 05–17B–25
- Joint Shaft Installation Note 05–17B–25
- Drive Shaft Installation Note 05–17B–25
- Lower Arm Installation Note 05–17B–25
- Tie-Rod End Installation Note 05–17B–25
- Breather Hose Installation Note 05–17B–26
- Selector Cable Installation Note 05–17B–26

OIL SEAL REMOVAL/INSTALLATION [GF4A-EL] 05–17B–26

CONTROL VALVE BODY REMOVAL/INSTALLATION [GF4A-EL] 05–17B–26

OIL COOLER REMOVAL/INSTALLATION [GF4A-EL] 05–17B–28
- Oil Cooler Installation Note 05–17B–28
- Oil Pipe Installation Note 05–17B–29
- Oil Hose Installation Note 05–17B–29
- Hose Clamp Installation Note 05–17B–29

DRIVE PLATE REMOVAL/INSTALLATION [GF4A-EL] 05–17B–30
- Drive Plate Mounting Bolts Removal Note 05–17B–30
- Drive Plate Mounting Bolts Installation Note 05–17B–30

MECHANICAL SYSTEM TEST [GF4A-EL]

W6U517W14

Mechanical System Test Preparation

1. Engage the parking brake and use wheel chocks at the front and rear of the wheels.
2. Check the engine coolant. (Refer to 01–11 ENGINE OIL LEVEL INSPECTION.)
3. Check the engine oil. (Refer to 01–12 ENGINE COOLANT LEVEL INSPECTION.)
4. Check the ATF levels. (Refer to 05–17B AUTOMATIC TRANSAXLE FLUID (ATF) INSPECTION [GF4A-EL].)
5. Check the idle speed and ignition timing in P position. (Refer to 01–10B ENGINE TUNE-UP [KL].)

Line Pressure Test

Warning

- **Removing the square-head plug when the ATF is hot can be dangerous. Hot ATF can come out of the opening and badly burn. Before removing the square-head plug, allow the ATF to cool.**

1. Remove the square head plug shown in the figure.

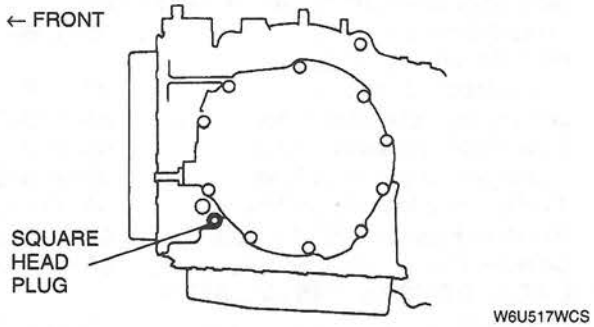

W6U517WCS

2. Connect the **SSTs** (49 H019 002, 49 B019 901, and 49 0378 400B) to the line pressure inspection port.

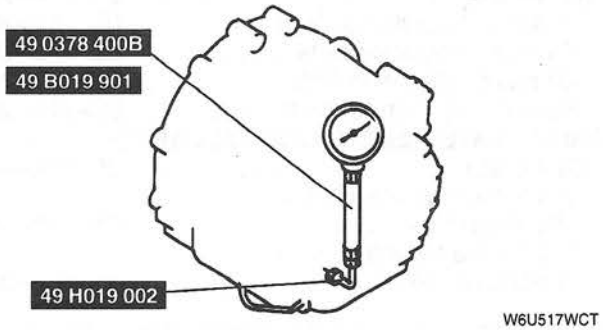

W6U517WCT

3. Start the engine.
4. Shift the selector lever to D range and read the line pressure at idle.
5. Replace the **SST** (49 B019 901) to the 49 B019 902.

Caution

- **If the accelerator pedal is pressed for longer than 5 seconds while the brake pedal is depressed, the transaxle could be damaged. Therefore, do steps 5 and 6 within 5 seconds of each other.**

6. Firmly depress the brake pedal with the left foot, and then gradually depress the accelerator pedal with the right.
7. When the engine speed no longer increases, quickly read the line pressure and release the accelerator.
8. Shift the selector to N position and let the engine idle for 1 minute or more to cool the ATF.
9. Read the line pressure at idle and at the engine stall speed for the remaining ranges in the same manner.
   (1) 2 range
   (2) 1 range
   (3) R position

ATF temperature
60—70 °C {140—158 °F}
Turn off all electrical loads

Position/ Range	Line pressure (kPa {kgf/cm^2, psi})	
	Idle	Stall
D, 2, 1	420—530 {4.2—5.5, 60—75}	1,100—1,170 {11.2—12.0, 160—170}
R	730—1,010 {7.4—10.3, 110—146}	1,910—2,020 {19.4—20.7, 276—294}

10. Shift the selector lever to P position.
11. Turn off the engine.
12. Install a new square head plug in the line pressure inspection port.

Tightening torque
5.0—9.8 N·m {50—110 kgf·cm, 44—86 in·lbf}

Evaluation of line pressure test

Line pressure	Possible cause
Low pressure in every position	Worn oil pump Oil leaking from oil pump, control valve body, and/or transaxle case Pressure regulator valve sticking Pressure control solenoid malfunction Pressure modulator valve sticking Solenoid reducing valve sticking
Low pressure in D and 2 only	Oil leaking from hydraulic circuit of forward clutch
Low pressure in 1 and R only	Oil leaking from hydraulic circuit of low and reverse brake
Low pressure in R only	Oil leaking from hydraulic circuit of reverse clutch
Higher than specification	Pressure control solenoid malfunction Pressure regulator valve sticking Pressure modulator valve sticking Solenoid reducing valve sticking

Stall Test

1. Start the engine.
2. Shift the selector lever to D range.

Caution

- **If the accelerator pedal is pressed for longer than 5 seconds while the brake pedal is pressed, the transaxle could be damaged. Therefore, do steps 3 and 4 within 5 seconds of each other.**

3. Firmly depress the brake pedal with the left foot, and gently depress the accelerator pedal with the right.
4. When the engine speed no longer increases, quickly read the engine speed and release the accelerator pedal.
5. Shift the selector to N position and let the engine idle for 1 minute or more to cool the ATF.
6. Perform stall tests for the remaining ranges in the same manner.
   (1) D range
   (2) R position
   (3) 2 range
   (4) 1 range

Engine stall speed
ATF temperature: 60—70 °C {140—158 °F}
Turn off all electrical loads
2,000—2,500 rpm

7. Turn off the engine.

Evaluation of stall test

Condition		Possible cause	
Above specification	In all forward ranges and R position	Insufficient line pressure	Worn oil pump
			Oil leaking from oil pump, control valve, and/or transaxle case
			Pressure regulator valve sticking
			Pressure control solenoid malfunction
			Pressure modulator valve sticking
	In forward ranges	Forward clutch slipping One-way clutch 1 slipping	
	In D range	One-way clutch 2 slipping	
	In 2 range	2–4 brake band slipping	
	In 1 range and R position	Low and reverse brake slipping	
	In R position	Low and reverse brake slipping Reverse clutch slipping Perform road test to determine whether problem is low and reverse brake or reverse clutch • Engine breaking felt in 1 range: Reverse clutch • Engine breaking not felt in 1 range: Low and reverse brake	
Below specification		Engine out of tune	
		One-way clutch slipping within torque converter	

Time Lag Test

1. Start the engine.
2. After normal operating temperature is reached, shift from N position to D range.
3. Use a stopwatch to measure the time it takes from shifting until shock is felt. Make three measurements for each test and average the results.
4. Perform the test for the following shifts in the same manner.
   - N position → R position

Time lag

N position → D range ... below approx. 0.9 second

N position → R position ... below approx. 1.1 second

Evaluation of time lag test

Condition		Possible Cause
More than specification	N → D shift	Insufficient line pressure Forward clutch slipping One-way clutch 1 slipping One-way clutch 2 slipping
	N → R shift	Insufficient line pressure Low and reverse brake slipping Reverse clutch slipping

ROAD TEST [GF4A-EL]

W6U517W15

Road Test Preparation

1. Before testing, check and correct the engine coolant, engine oil, and ATF levels as necessary.
2. Warm the engine thoroughly to raise the ATF temperature to operating level (**60—70 °C {140—158 °F}**).
3. Check the idle speed and ignition timing in P position. (Refer to 01–10B ENGINE TUNE-UP [KL].)

Typical Shift Diagram

D RANGE (O/D OFF SWITCH OFF, NORMAL MODE)

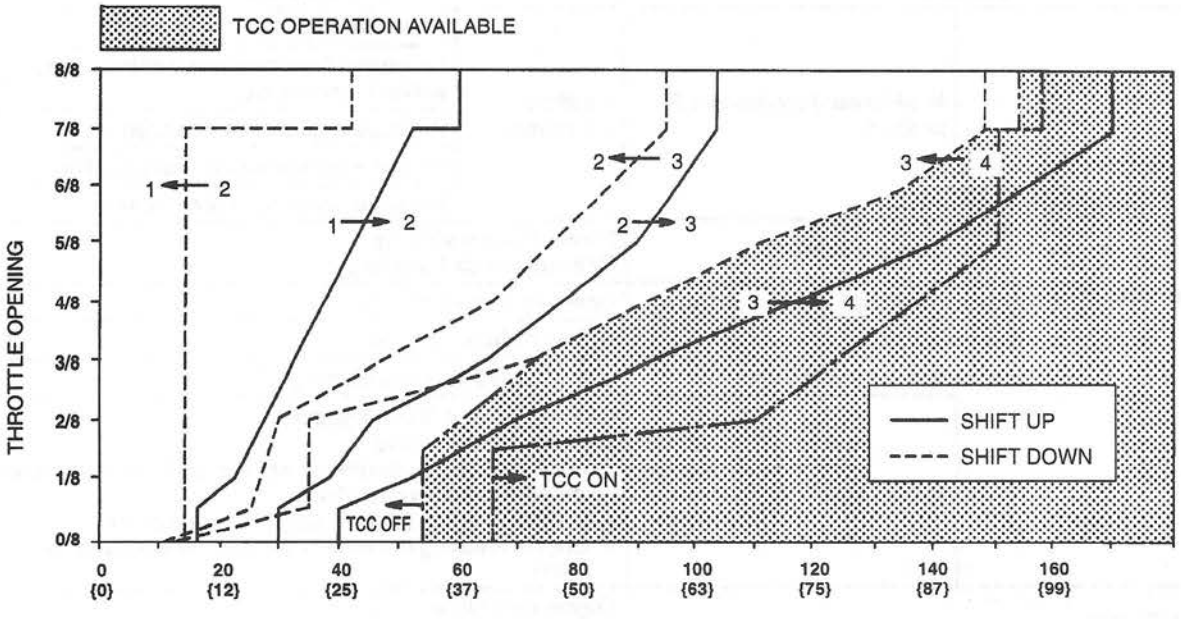

W6U517WCU

D Range Test
D range (O/D OFF switch OFF)

Note
- The NORMAL mode and SLOPE mode are automatically selected by the powertrain control module. The powertrain control module is shift to SLOPE mode when the upgrade or downgrade is approx. 4% or more, and is shift to NORMAL mode when the upgrade or downgrade is approx. 2% or less.

1. Shift the selector lever to D range.
2. Accelerate the vehicle with half and wide open throttle.
3. Verify that 1→2, 2→3, and 3→4 upshifts and downshifts are obtained. The shift points must be as shown in the diagram above.
4. Drive the vehicle in fourth, third, and second gears and verify that kickdown occurs for 4→3, 4→2, 4→1, 3→2, 3→1, 2→1, and that the shift points are as shown in the diagram above.
5. Decelerate the vehicle and verify that engine braking effect is felt in fourth and third gears.
6. Drive the vehicle and verify that torque converter clutch operation is obtained in fourth gear. (only for NORMAL mode)

D range (O/D OFF switch ON)
1. Shift the selector lever to D range and select the O/D OFF switch ON.
2. Accelerate the vehicle with half and wide open throttle.
3. Verify that 1→2 and 2→3 upshifts and downshifts are obtained.
4. Drive the vehicle in third and second gears and verify that kickdown occurs for 3→2, 3→1, 2→1.
5. Decelerate the vehicle and verify that engine braking effect is felt in third gear.
6. Drive the vehicle and verify that torque converter clutch operation is obtained in third gear.

Noise and vibration
Drive the vehicle in third gear (O/D OFF switch ON) and listen closely for any out of the ordinary noise or vibration. The torque converter, drive shaft, and differential can be sources of abnormal noise and vibration if they are not functioning properly. Check these when searching for sources of noise and vibration.

Shift point

Range/Mode			Throttle condition	Shift	Vehicle speed (km/h {mph})	Turbine speed (rpm)
D	O/D OFF switch OFF	NORMAL	Wide open throttle	1GR→2GR	59—65 {37—40}	5,950—6,550
				2GR→3GR	102—110 {63—68}	5,650—6,100
				3GR→4GR	167—177 {104—110}	6,000—6,400
				TCC ON (4GR)	151—161 {94—100}	3,800—4,100
			Half throttle	1GR→2GR	36—40 {22—25}	3,650—2,257
				2GR→3GR	74—81 {46—50}	4,100—4,500
				3GR→4GR	110—122 {68—76}	6,200—4,400
				TCC ON (4GR)	133—140 {82—87}	3,400—3,550
			Closed throttle position	4GR→1GR	11—17 {7—10}	300—400
			Kickdown	4GR→3GR	143—153 {89—95}	3,600—3,900
				3GR→2GR	91—99 {56—61}	3,300—3,600
				2GR→1GR	39—45 {24—28}	2,200—2,500
		SLOPE	Wide open throttle	1GR→2GR	59—65 {37—40}	5,950—6,550
				2GR→3GR	102—110 {63—68}	5,650—6,100
				3GR→4GR	167—177 {104—110}	6,000—6,400
				TCC ON (4GR)	151—161 {94—100}	3,800—4,100
			Half throttle	1GR→2GR	36—40 {22—25}	3,650—2,257
				2GR→3GR	70—89 {43—55}	3,150—3,300
				3GR→4GR	93—119 {58—74}	3,350—3,050
				TCC ON (4GR)	133—140 {82—87}	3,400—3,550
			Closed throttle position	4GR→1GR	11—17 {7—10}	300—400
			Kickdown	4GR→3GR	143—153 {89—95}	3,600—3,900
				3GR→2GR	91—99 {56—61}	3,300—3,600
				2GR→1GR	39—45 {24—28}	2,200—2,500
	O/D OFF switch ON	NORMAL	Wide open throttle	1GR→2GR	59—65 {37—40}	5,950—6,550
				2GR→3GR	102—110 {63—68}	5,650—6,100
			Half throttle	1GR→2GR	36—40 {22—25}	3,650—2,257
				2GR→3GR	74—81 {46—50}	4,100—4,500
			Closed throttle position	3GR→1GR	11—17 {7—10}	300—400
			Kickdown	3GR→2GR	91—99 {56—61}	3,300—3,600
				2GR→1GR	39—45 {24—28}	2,200—2,500
		SLOPE	Wide open throttle	1GR→2GR	59—65 {37—40}	5,950—6,550
				2GR→3GR	102—110 {63—68}	5,650—6,100
				TCC ON (3GR)	108—118 {67—73}	3,950—4,350
			Half throttle	1GR→2GR	36—40 {22—25}	3,650—2,257
				2GR→3GR	70—89 {43—55}	3,150—3,300
			Closed throttle position	3GR→1GR	11—17 {7—10}	300—400
			Kickdown	3GR→2GR	91—99 {56—61}	3,300—3,600
				2GR→1GR	39—45 {24—28}	2,200—2,500

2 Range Test

Vehicle without traction control system (TCS)

1. Shift the selector lever to 2 range.
2. Accelerate the vehicle with half and wide open throttle, and verify that second gear is held.
3. Decelerate the vehicle and verify that engine braking effect is felt.

Vehicle with TCS

1. Shift the selector lever to 2 range.
2. Accelerate the vehicle with half and wide open throttle, and verify the 1–2 upshift and downshift are obtained.
3. Decelerate the vehicle and verify that engine braking effect is felt in second gear.

Noise and vibration

Drive the vehicle in second gear and listen closely for any out of the ordinary noise or vibration. The torque converter, drive shaft, and differential can be sources of abnormal noise and vibration if they are not functioning properly. Check these when searching for sources of noise and vibration.

Shift point

Vehicle without TCS

Range	Throttle condition	Shift	Vehicle speed (km/h {mph})	Turbine speed (rpm)
2	—	4GR→3GR	165—171 {102—106}	4,200—4,300
		3GR→2GR	101—107 {62—66}	3,650—3,900

Vehicle with TCS

Range	Throttle condition	Shift	Vehicle speed (km/h {mph})	Turbine speed (rpm)
2	Wide open throttle	1GR→2GR	59—65 {37—40}	5,950—6,550
	Half throttle	1GR→2GR	36—40 {22—25}	3,650—2,257
	Closed throttle position	2GR→1GR	13—19 {8—12}	1,350—2,000
	Kickdown	2GR→1GR	39—45 {24—28}	2,200—2,500
	—	4GR→3GR	165—171 {102—106}	4,200—4,300
		3GR→2GR	101—107 {62—66}	3,650—3,900

1 Range Test

1. Shift the selector lever to 1 range.
2. Accelerate the vehicle with half and wide open throttle, and verify that first gear is held.
3. Decelerate the vehicle and verify that engine braking effect is felt.

Noise and vibration

Drive the vehicle in first gear and listen closely for any out of the ordinary noise or vibration. The torque converter, drive shaft, and differential can be sources of abnormal noise and vibration if they are not functioning properly. Check these when searching for sources of noise and vibration.

Shift point

Range	Throttle condition	Shift	Vehicle speed (km/h {mph})	Turbine speed (rpm)
1	—	2GR→1GR	44—50 {27—31}	2,450—2,800

P Position Test
Shift into P position on a gentle slope, release the brake, and verify that the vehicle does not roll.

Evaluation

Condition	Possible Cause
No 1–2 up- or downshift	Stuck shift solenoid A Stuck 1–2 shift valve
No 2–3 up- or downshift	Stuck shift solenoid B Stuck 2–3 shift valve
No 3–4 up- or downshift	Stuck shift solenoid C Stuck 3–4 shift valve
TCC non operation shift	Stuck torque converter clutch control solenoid valve Stuck torque converter clutch control valve
Incorrect shift point	Misadjusted throttle position sensor Stuck shift valves
Excessive shift shock or slippage	Stuck accumulators Stuck or no one-way check orifice Worn clutches, brakes, or one-way clutch
No engine braking effect	Worn clutches or brakes

AUTOMATIC TRANSAXLE FLUID (ATF) INSPECTION [GF4A-EL]

W6U517W16

ATF Condition Inspection
One way of determining whether the transaxle should be disassembled is by noting:
1. If the ATF is muddy or varnished.
2. If the ATF smells strange or unusual.

ATF Condition

Condition			Possible cause
Clear red		Normal	—
Light red (pink)		Contaminated with water	• Broken oil cooler inside of radiator • Poor breather hose installation By water contamination, problem could be occurring to parts inside of transaxle. It is necessary to overhaul transaxle and detect defected parts. If necessary, exchange transaxle.
Reddish brown	Has burnt smell and metal specs are found	Deteriorated ATF	Defective powertrain components inside of transaxle. Specs cause wide range of problems by plugging up in oil pipe, control valve body, and oil cooler in radiator. • When large amount of metal specs are found, overhaul transaxle and detect defective parts. If necessary, exchange transaxle. • Implement flushing operation as there is a possibility to have specs plugged in oil pipe and/or oil cooler inside of radiator.
	Has no burnt smell	Normal	Discoloration by oxidation

ATF Level Inspection

Caution
- **The ATF amount varies according to ATF's temperature. Therefore, when checking the ATF level or replacing the ATF, use a thermometer to measure the temperature then adjust the ATF amount to the specified level according to the specified temperature.**

1. Park the vehicle on level ground.
2. Apply the parking brake and position wheel chocks securely to prevent the vehicle from rolling.

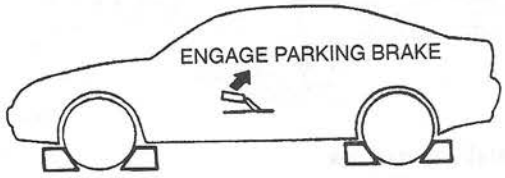

W6U517WCW

3. Adjust the length of the thermistor probe measure to measure the same as the dipstick and hold the probe with a paper holder. Insert into the filler tube and measure the temperature.

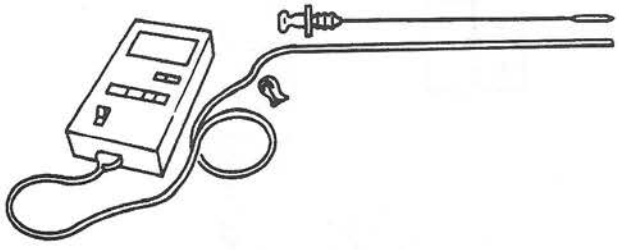

W6U517WCV

4. Warm up the engine until the ATF reaches **60—70 °C {140—158 °F}**.

Caution
- **Do not warm the transaxle by performing stalls. This will damage the torque converter.**

Note
- In some cases it may be necessary to inspect the ATF in the cool range **15—25 °C {59—77 °F}** before warming up the engine.

5. While depressing the brake pedal, shift the selector lever to each range (P—1), pausing momentarily in each range.

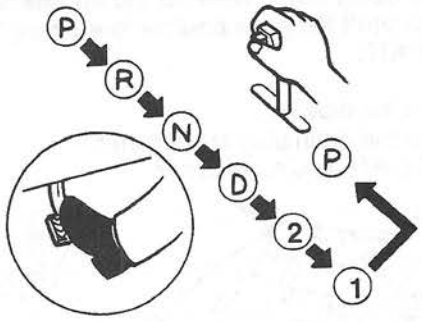

W6U517WCX

6. Shift back to P position.

Note
- If the ATF level is too high or too low in hot condition, the following problems may be the cause.

ATF level	Condition	Possible cause
Too low	Line pressure is lower than the specification	Air in transaxle oil passage due to slipping or damaged clutch mechanism
Too high	ATF is hot	ATF deteriorated due to slipping clutch or stuck valve

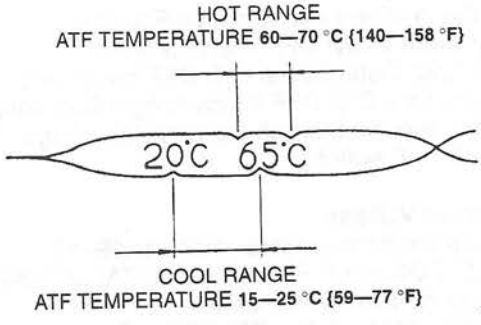

W6U517WCY

7. Ensure that the ATF level is in the HOT (65 °C) range. Add ATF to the specification, if necessary.

ATF type
ATF M-III or equivalent (e.g. Dexron®II)

AUTOMATIC TRANSAXLE FLUID (ATF) REPLACEMENT [GF4A-EL]

W6U517W39

Warning
- **When the transaxle and ATF are hot, they can badly burn. Turn off the engine and wait until they are cool before changing the ATF.**

1. Remove the dipstick.
2. Remove the drain plug and washer.
3. Drain the ATF into a container.

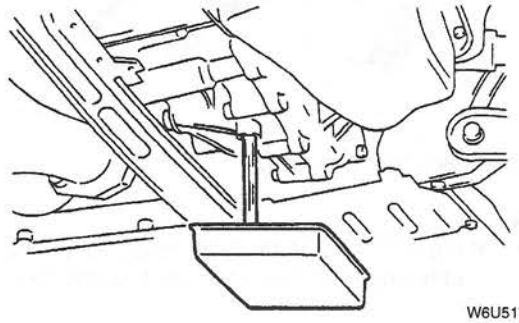

W6U517WCZ

4. Install a new washer and the drain plug.

Tightening torque
40—53 N·m {4.0—5.5 kgf·m, 29—39 ft·lbf}

5. Add the specified amount and type of ATF through the oil filler tube.

ATF type
M-III or equivalent (e.g. Dexron®II)
Capacity
8.0 L {8.5 US qt, 7.0 Imp qt}

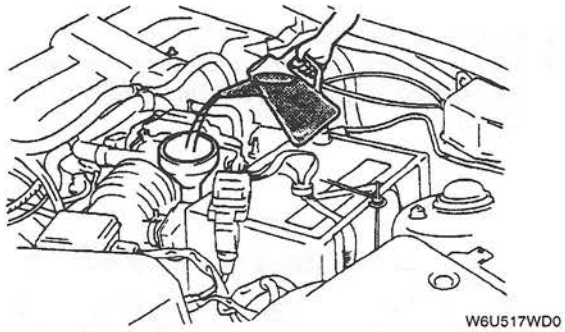

W6U517WD0

6. Install the dipstick.
7. Verify the ATF level. (Refer to 05–17B AUTOMATIC TRANSAXLE FLUID (ATF) INSPECTION [GF4A-EL], ATF Level Inspection.)

O/D OFF SWITCH INSPECTION [GF4A-EL]

W6U517W17

Inspection of Operation
1. Turn the ignition switch from OFF to ON.
2. Verify that the O/D OFF indicator is not illuminated. Depress the O/D OFF switch and verify that the O/D OFF indicator light illuminates.
3. If not as specified, check the terminal voltage of the O/D OFF switch.

Inspection of Voltage
1. Remove the front console. (Refer to 09–17 FRONT CONSOLE REMOVAL/INSTALLATION.)
2. Turn the ignition switch to ON.
3. Measure voltage at the O/D OFF switch connector terminals.

Position		Connector terminal	
		A	B
OFF (Normal)	(V)	B+	0
ON (Depressed)	(V)	0	0

(V) : Voltage

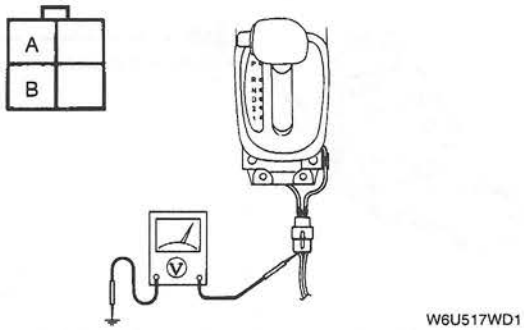

W6U517WD1

4. If not as specified, check the continuity of the O/D OFF switch.

Inspection of Continuity
1. Disconnect the negative battery cable.
2. Disconnect the O/D OFF switch connector.
3. Check continuity of the switch.

○—○ : Continuity

Position	Terminal	
	A	B
OFF (Normal)		
ON (Depressed)	○	○

W6U517WF4

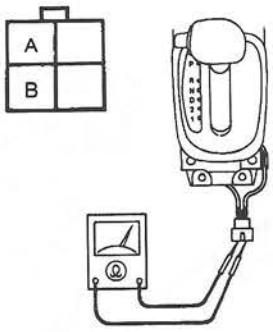

W6U517WD2

4. If not as specified, replace the selector lever knob component. (Refer to 05–17B O/D OFF SWITCH REMOVAL/INSTALLATION [GF4A-EL].)
5. If the switch is OK, check the wiring harness. (O/D OFF switch—powertrain control module, O/D OFF switch—Body ground.)
6. Install the front console. (Refer to 09–17 FRONT CONSOLE REMOVAL/INSTALLATION.)
7. Connect the negative battery cable.

O/D OFF SWITCH REMOVAL/INSTALLATION [GF4A-EL]

W6U517W36

1. Disconnect the negative battery cable.
2. Remove the front console. (Refer to 09–17 FRONT CONSOLE REMOVAL/INSTALLATION.)
3. Remove the indicator panel installation screws. (Refer to 05–18 SELECTOR LEVER DISASSEMBLY/ASSEMBLY.)
4. Disconnect the connector and remove the O/D OFF switch terminals.
5. Remove the selector lever knob component.
6. Install a new selector lever knob component.

Tightening torque
2.0—2.9 N·m {20—30 kgf·cm, 18—26 in·lbf}

7. Install the O/D OFF switch terminals and connect the connector.
8. Install the indicator panel installation screws. (Refer to 05–18 SELECTOR LEVER DISASSEMBLY/ASSEMBLY.)
9. Install the front console. (Refer to 09–17 FRONT CONSOLE REMOVAL/INSTALLATION.)
10. Connect the negative battery cable.

TRANSAXLE RANGE SWITCH INSPECTION [GF4A-EL]

W6U517W18

Inspection of Operation

1. Verify that the starter operates only with the ignition switch at the START position and the selector lever in P and N positions.
2. Verify that the back-up lights illuminate when shifted to R position with the ignition switch in the ON position.
3. Check the transaxle range switch if not as specified.

Inspection of Continuity

1. Disconnect the negative battery cable.
2. Remove the resonance chamber, fresh-air duct, and air cleaner component. (Refer to 01–13B INTAKE-AIR SYSTEM REMOVAL/INSTALLATION [KL].)
3. Disconnect the transaxle range switch connector.
4. Check continuity of the transaxle range switch.

○—○ : Continuity

Position/ Range	Connector terminal								
	A	B	C	D	E	F	G	H	I
P	○				○				
						○			○
R	○			○					
N	○							○	
						○			○
D	○	○							
2	○						○		
1	○		○						

W6U517WF5

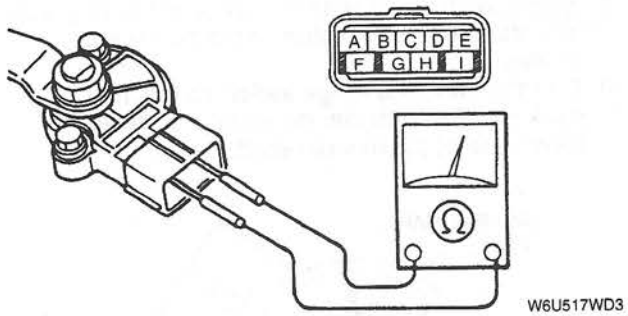

W6U517WD3

5. If not as specified, replace or adjust the transaxle range switch.
6. Connect the transaxle range switch connector.
7. Install the air cleaner component, fresh-air duct, and resonance chamber. (Refer to 01–13B INTAKE-AIR SYSTEM REMOVAL/INSTALLATION [KL].)
8. Connect the negative battery cable.

TRANSAXLE RANGE SWITCH REMOVAL/INSTALLATION [GF4A-EL]

1. Disconnect the negative battery cable.
2. Remove the resonance chamber, fresh-air duct, and air cleaner component. (Refer to 01–13B INTAKE-AIR SYSTEM REMOVAL/INSTALLATION [KL].)
3. Disconnect the transaxle range switch connector.
4. Remove the clip and spring pin.
5. Remove the selector cable in the order shown in the figure.
   (1) Disconnect the selector cable from the manual shaft lever.
   (2) Pull out the selector cable from the cable bracket and remove it.

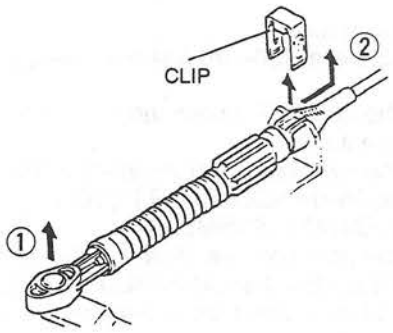

W6U517WD4

6. Remove the manual shaft nut.
7. Remove the lock-washer and lever.
8. Remove the transaxle range switch.
9. Rotate the manual shaft to converter housing side fully, then return 2 notches to set the neutral position.
10. Turn the transaxle range switch so that the N mark is in line with the flat, straight surfaces on either side of the manual shaft.

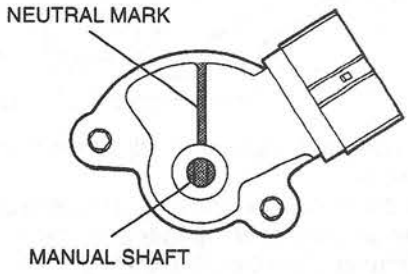

W6U517WD5

11. Hand tighten the transaxle range switch bolts.
12. Verify that there is continuity between terminals A and H of the transaxle range switch connector.

W6U517W19

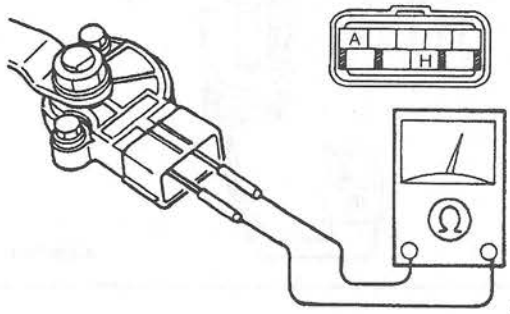

W6U517WD6

13. Tighten the transaxle range switch mounting bolts.

Tightening torque
7.9—10.7 N·m
{80—110 kgf·cm, 69.5—95.4 in·lbf}

14. Install the lever and spring washer.
15. Tighten the manual shaft nut by using a torque wrench.

Tightening torque
32—46 N·m {3.2—4.7 kgf·m, 24—33 ft·lbf}

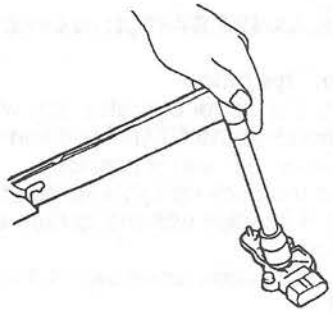
W6U517WD7

16. Verify that the selector lever range position and transaxle range switch are aligned; then connect the selector cable and install a new spring pin and clip.
17. Check continuity of the transaxle range switch. (Refer to 05–17B TRANSAXLE RANGE SWITCH INSPECTION [GF4A-EL], Inspection of Continuity.)
18. Connect the transaxle range switch connector.
19. Install the air cleaner component, fresh-air duct, and resonance chamber. (Refer to 01–13B INTAKE-AIR SYSTEM REMOVAL/INSTALLATION [KL].)
20. Connect the negative battery cable.
21. Check operation of the transaxle range switch. (Refer to 05–17B TRANSAXLE RANGE SWITCH INSPECTION [GF4A-EL], Inspection of Operation.)

TRANSAXLE RANGE SWITCH ADJUSTMENT [GF4A-EL]

W6U517W40

1. Disconnect the negative battery cable.
2. Remove the resonance chamber, fresh-air duct, and air cleaner component. (Refer to 01–13B INTAKE-AIR SYSTEM REMOVAL/INSTALLATION [KL].)
3. Remove the spring pin and clip and disconnect the selector cable.
4. Rotate the manual shaft to N position.
5. Disconnect the transaxle range switch connector.
6. Loosen the transaxle range switch mounting bolts.
7. Connect an ohmmeter between terminals A and H.

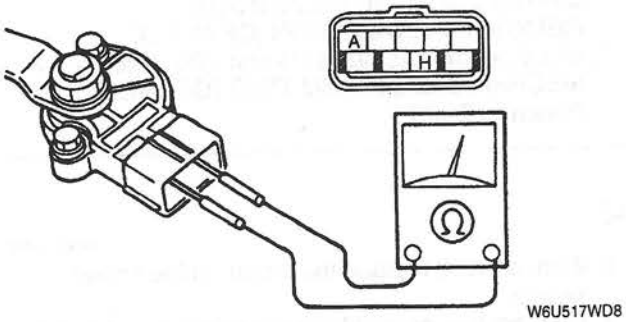

W6U517WD8

8. Adjust the switch to the point where there is continuity between the terminals.
9. Tighten the transaxle range switch mounting bolts.

Tightening torque
7.9—10.7 N·m
{80—110 kgf·cm, 69.5—95.4 in·lbf}

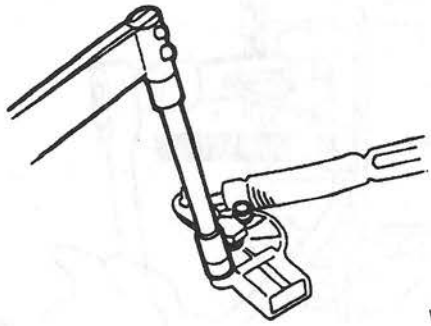

W6U517WD9

10. Verify that the selector lever range position and transaxle range switch are aligned.
11. Connect the transaxle range switch connector.
12. Connect the selector cable and install a new spring pin and clip.
13. Install the air cleaner component, fresh-air duct, and resonance chamber. (Refer to 01–13B INTAKE-AIR SYSTEM REMOVAL/INSTALLATION [KL].)
14. Connect the negative battery cable.

TRANSAXLE FLUID TEMPERATURE SENSOR INSPECTION [GF4A-EL]

W6U517W20

1. Remove the transaxle fluid temperature sensor. (Refer to 05–17B TRANSAXLE FLUID TEMPERATURE REMOVAL/INSTALLATION [GF4A-EL].)

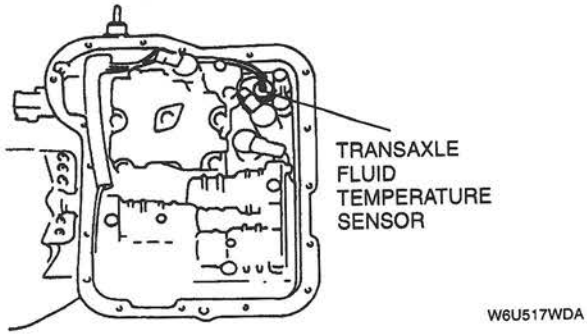

W6U517WDA

2. Place the transaxle fluid temperature sensor in ATF with a thermometer as shown and heat the ATF gradually. Do not allow the test pieces to touch the bottom.
3. Measure resistance between the terminals of the transaxle fluid temperature sensor.

ATF temperature (°C {°F})	Resistance (kΩ)
–20 {–4}	13.47—17.17
0 {32}	5.445—6.678
20 {68}	2.441—2.894
40 {104}	1.193—1.374
60 {140}	0.6284—0.7048
80 {176}	0.3527—0.3865
100 {212}	0.2091—0.2245
120 {248}	0.1301—0.1372
130 {266}	0.1044—0.1090

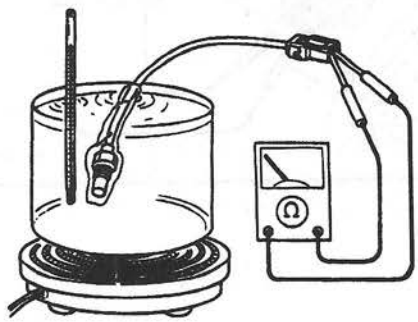

W6U517WDB

4. If not correct, replace the transaxle fluid temperature sensor.
5. Install the transaxle temperature sensor. (Refer to 05–17B TRANSAXLE TEMPERATURE SENSOR REMOVAL/INSTALLATION [GF4A-EL].)

TRANSAXLE FLUID TEMPERATURE SENSOR REMOVAL/INSTALLATION [GF4A-EL]

W6U517W21

1. Remove the control valve body cover. (Refer to 05–17B CONTROL VALVE BODY REMOVAL/INSTALLATION [GF4A-EL].)
2. Disconnect the transaxle fluid temperature sensor connector.

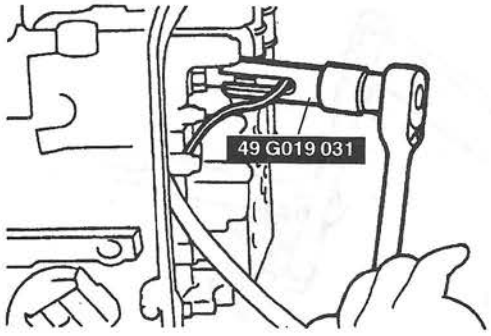

W6U517WDC

3. Remove the transaxle fluid temperature sensor by using the **SST**.
4. Install a new transaxle fluid temperature sensor by using the **SST**.

Tightening torque
7.9—10.7 N·m
{80—110 kgf·cm, 69.5—95.4 in·lbf}

5. Connect the transaxle fluid temperature sensor connector.
6. Install the control valve body cover. (Refer to 05–17B CONTROL VALVE BODY REMOVAL/INSTALLATION [GF4A-EL].)
7. Carry out the line pressure test. (Refer to 05–17B MECHANICAL SYSTEM TEST [GF4A-EL], Line Pressure Test.)

INPUT/TURBINE SPEED SENSOR INSPECTION [GF4A-EL]

W6U517W22

1. Disconnect the negative battery cable.
2. Remove the resonance chamber, fresh-air duct, and air cleaner component. (Refer to 01–13B INTAKE-AIR SYSTEM REMOVAL/INSTALLATION [KL].)
3. Remove the fuel filter mounting nuts.
4. Disconnect the input/turbine speed sensor connector.
5. Measure resistance between the terminals of the input/turbine speed sensor.

Resistance (ATF temperature: –40—160 °C {–40—320 °F})
253—604 Ω

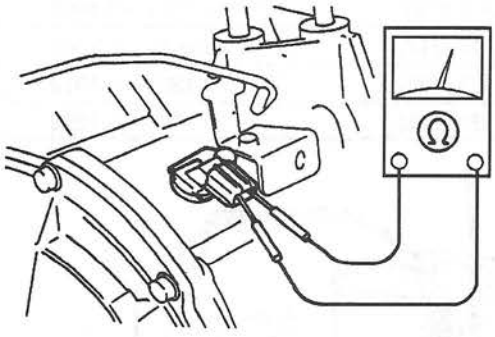

W6U517WDD

6. If not correct, replace the input/turbine speed sensor.
7. Connect the input/turbine speed sensor connector.
8. Install the fuel filter mounting nuts.
9. Install the air cleaner component, fresh-air duct, and resonance chamber. (Refer to 01-13B INTAKE-AIR SYSTEM REMOVAL/INSTALLATION [KL].)
10. Connect the negative battery cable.

INPUT/TURBINE SPEED SENSOR REMOVAL/INSTALLATION [GF4A-EL]

W6U517W23

1. Disconnect the negative battery cable.
2. Remove the resonance chamber, fresh-air duct, and air cleaner component. (Refer to 01–13B INTAKE-AIR SYSTEM REMOVAL/INSTALLATION [KL].)
3. Remove the fuel filter mounting nuts.
4. Disconnect the input/turbine speed sensor connector.
5. Remove the input/turbine speed sensor.

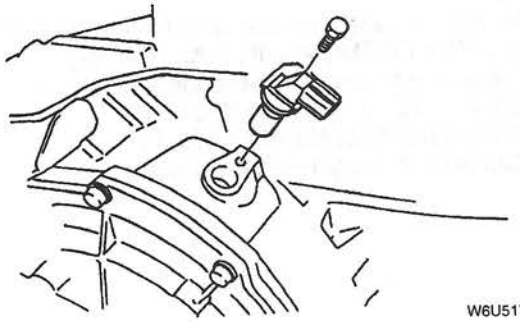

W6U517WDF

6. Apply ATF to a new O-ring and install it on a new input/turbine speed sensor.
7. Install the input/turbine speed sensor.

Tightening torque
7.9—10.7 N·m
{80—110 kgf·cm, 69.5—95.4 in·lbf}

8. Connect the input/turbine speed sensor connector.
9. Install the fuel filter mounting nuts.
10. Install the air cleaner component, fresh-air duct, and resonance chamber. (Refer to 01–13B INTAKE-AIR SYSTEM REMOVAL/INSTALLATION [KL].)
11. Connect the negative battery cable.

VEHICLE SPEEDOMETER SENSOR INSPECTION [GF4A-EL]

W6U517W24

1. Remove the vehicle speedometer sensor. (Refer to 05–17B VEHICLE SPEEDOMETER SENSOR REMOVAL/INSTALLATION [GF4A-EL].)

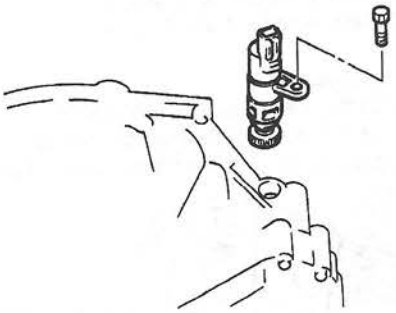

W6U517WDG

2. Measure the voltage between terminals of the vehicle speedometer sensor while rotating the driven gear.

Meter needle	Action
Moves slightly under 5 V	Repair wiring harness (Instrument cluster—Vehicle speedometer sensor)
Does not move	Replace vehicle speedometer sensor

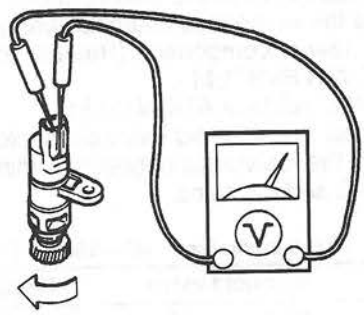

W6U517WDH

3. Install the vehicle speedometer sensor. (Refer to 05–17B VEHICLE SPEEDOMETER SENSOR REMOVAL/INSTALLATION [GF4A-EL].)

VEHICLE SPEEDOMETER SENSOR REMOVAL/INSTALLATION [GF4A-EL]

W6U517W25

1. Disconnect the negative battery cable.
2. Remove the battery component. (Refer to 01–17 BATTERY REMOVAL/INSTALLATION.)
3. Remove the air cleaner component. (Refer to 01–13B INTAKE-AIR SYSTEM REMOVAL/INSTALLATION [KL].)
4. Disconnect the vehicle speedometer sensor connector.
5. Remove the vehicle speedometer sensor.

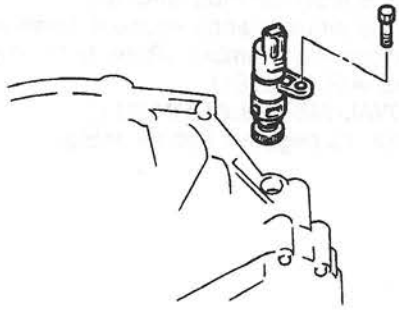

W6U517WDK

6. Apply ATF to a new O-ring and install it on a new vehicle speedometer sensor.
7. Install the vehicle speedometer sensor.

Tightening torque
7.9—10.7 N·m
{80—110 kgf·cm, 69.5—95.4 in·lbf}

8. Connect the vehicle speedometer sensor connector.
9. Install the battery component. (Refer to 01–07 BATTERY REMOVAL/INSTALLATION.)
10. Install the air cleaner component. (Refer to 01–03B INTAKE-AIR SYSTEM REMOVAL/INSTALLATION [KL].)
11. Connect the negative battery cable.

SOLENOID VALVES INSPECTION [GF4A-EL]

W6U517W26

Inspection of Resistance

1. Disconnect the negative battery cable.
2. Remove the resonance chamber, fresh-air duct and air cleaner component. (Refer to 01–13B INTAKE-AIR SYSTEM REMOVAL/INSTALLATION [KL].)
3. Disconnect the solenoid valve connector.
4. Measure the resistance between terminals A through G and a ground.

ATF temperature: –40—160 °C {–40—320 °F}

Terminal	Solenoid valve	Resistance (Ω)
A	Shift solenoid A	11—27
B	Shift solenoid B	11—27
C	Shift solenoid C	11—27
D	Torque converter clutch control	11—27
E	3–2 timing	11—27
G	Pressure control	9—18

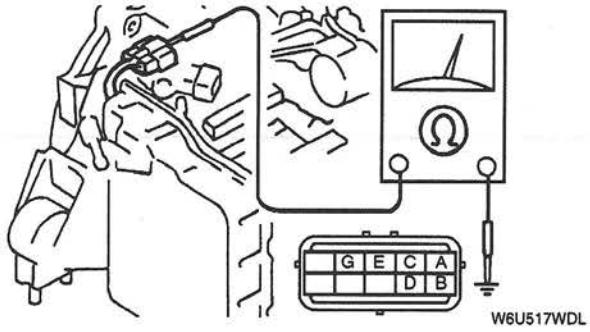

W6U517WDL

5. If not correct, check the wiring harness or replace the solenoid valve(s), if necessary.
6. Connect the solenoid valve connector.
7. Install the air cleaner component, fresh-air duct and resonance chamber. (Refer to 01–13B INTAKE-AIR SYSTEM REMOVAL/INSTALLATION [KL].)
8. Connect the negative battery cable.

Inspection of Operation

1. Disconnect the negative battery cable.
2. Disconnect the solenoid valve connector.
3. Apply battery voltage to each terminal of A—G.

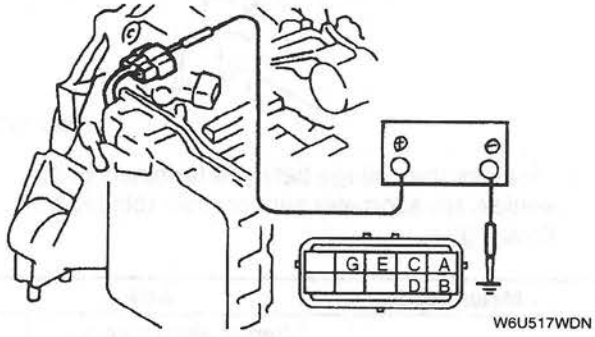

W6U517WDN

4. Verify that each control valve operates with a "click".
5. If the "click" is not heard, replace the solenoid valve.

Inspection of Output Duty

Pressure control solenoid

1. Connect the (+) terminal of a dwell meter to terminal 81 at the powertrain control module and the (–) terminal to a ground. Set the dwell meter selector to the 4 cylinder position.
2. Engage the parking brake and use wheel chocks at the front and rear of the wheels.
3. Start the engine.
4. Depress the brake pedal firmly.

5. Shift the selector lever to D range.

Caution
- **If the accelerator pedal is pressed for longer then 5 seconds while the brake pedal is pressed, the transaxle could be damaged. Therefore, do step 6 within 5 second of each other.**

Note
- The dwell meter indicates the OFF duty ratio.

6. Depress the accelerator pedal slowly and verify that the duty ratio charges as shown in the graph.

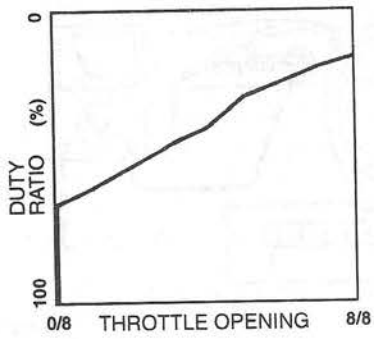

W6U517WDP

7. If not as specified, check the powertrain control module (Refer to 01–40B POWERTRAIN CONTROL MODULE (PCM) INSPECTION [KL].) and pressure control solenoid. (Refer to Inspection of resistance.)

SOLENOID VALVE REMOVAL/INSTALLATION [GF4A-EL]

W6U517W27

1. Remove the control valve body. (Refer to 05–17B SOLENOID VALVE BODY REMOVAL/INSTALLATION [GF4A-EL].)
2. Remove the solenoid valve(s).

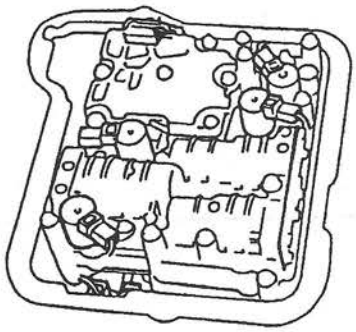
W6U517WDQ

3. Apply ATF to a new O-ring and install it on the solenoid valve.
4. Install the solenoid valve in the control valve body.

Tightening torque
6.5—7.8 N·m {66—80 kgf·cm, 58—69 in·lbf}

5. Install the control valve body. (Refer to 05–17B CONTROL VALVE BODY REMOVAL/INSTALLATION [GF4A-EL].)
6. Carry out the time lag test and line pressure test. (Refer to 05–17B MECHANICAL SYSTEM TEST [GF4A-EL], Line Pressure Test.)
7. Carry out the road test. (Refer to 05–17B ROAD TEST [GF4A-EL].)

O/D OFF INDICATOR LIGHT INSPECTION [GF4A-EL]

W6U517W28

Inspection of Operation

1. Turn the ignition switch from OFF to ON.

Note
- The O/D OFF indicator light will light if a malfunction exists in any of the EC-AT system components.

2. Verify that the O/D OFF indicator light is not illuminated.
3. Depress the switch and verify that the O/D OFF indicator illuminates.
4. If the O/D OFF switch function is not as specified, after checking the O/D OFF switch (Refer to 05–17B O/D OFF SWITCH INSPECTION.), check the terminal voltage of the O/D OFF indicator light.

Inspection of Voltage

1. Remove the instrument cluster. (Refer to 09–22 INSTRUMENT CLUSTER REMOVAL/INSTALLATION.)
2. Turn the ignition switch to ON.
3. Measure voltage between terminal 3N and a ground.

Voltage	Action
B+	Go to next step
Other	• Replace METER fuse • Repair wiring harness (METER fuse—Instrument cluster)

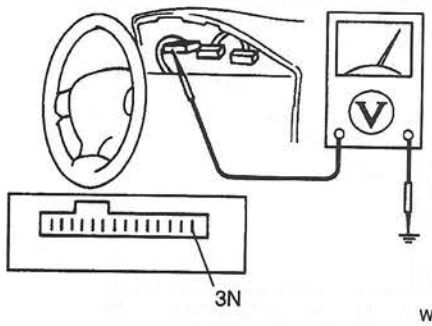

W6U517WDR

Inspection of Continuity

1. Disconnect the negative battery cable.
2. Disconnect the instrument cluster connector.
3. Check continuity between terminal 3C and powertrain control module terminal 79.

Terminals	Continuity
3C—79	Yes

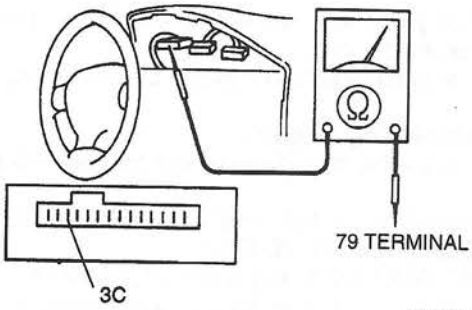

W6U517WDS

4. If not correct, check the wiring harness (instrument cluster—powertrain control module).
5. If correct, go to the next step.
6. Check continuity between terminals 3N and 3C.

Terminals	Continuity
3N—3C	Yes

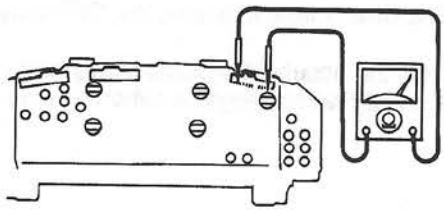

W6U517WDT

7. If not correct, replace the instrument cluster or bulb.
8. Install the instrument cluster. (Refer to 09–22 INSTRUMENT CLUSTER REMOVAL/INSTALLATION.)
9. Connect the negative battery cable.

POWERTRAIN CONTROL MODULE INSPECTION [GF4A-EL]

W6U517W29

Note

- For **PID/DATA Monitor and Record**, refer to 01–40B POWERTRAIN CONTROL MODULE (PCM) INSPECTION [KL].

POWERTRAIN CONTROL MODULE REMOVAL/INSTALLATION [GF4A-EL]

W6U517W30

Refer to 01–40B POWERTRAIN CONTROL MODULE (PCM) REMOVAL/INSTALLATION [KL].

AUTOMATIC TRANSAXLE REMOVAL/INSTALLATION [GF4A-EL]

W6U517W31

The oil pan could contain small chips, shavings, and other particles helpful in checking the condition of the transaxle and diagnosing certain problems.
To ensure that all foreign particles stay in the oil pan, make sure that the transaxle is never tipped completely over while the oil pan is still installed.

1. Disconnect the negative battery cable.
2. Drain the ATF into a container. (Refer to 05–17B AUTOMATIC TRANSAXLE FLUID (ATF) REMOVAL/INSTALLATION [GF4A-EL].)
3. Remove the battery component. (Refer to 01–17 BATTERY REMOVAL/INSTALLATION.)
4. Remove the fresh-air duct, air cleaner component. (Refer to 01–13B INTAKE-AIR SYSTEM REMOVAL/INSTALLATION [KL].)
5. Remove the front wheel and tire.
6. Remove the splash shield.
7. Remove in the order indicated in the table.
8. After removal, remove the oil pan to check the condition of the transaxle.
9. Install in the reverse order of removal.
10. Install the splash shield.
11. Install the wheel and tire.
12. Install the air cleaner component, fresh-air duct. (Refer to 01–13B INTAKE-AIR SYSTEM REMOVAL/INSTALLATION [KL].)
13. Install the battery component. (Refer to 01–07 BATTERY REMOVAL/INSTALLATION.)
14. Fill the transaxle with the specified ATF after installation. (Refer to 05–17B AUTOMATIC TRANSAXLE FLUID (ATF) REPLACEMENT [GF4A-EL].)
15. Check for leakage of ATF from all connecting points.
16. Connect the negative battery cable.
17. Check the operation of the transaxle range switch. (Refer to 05–17B TRANSAXLE RANGE SWITCH INSPECTION [GF4A-EL].)
18. Check the operation of the selector lever. (Refer to 05–18 SELECTOR LEVER INSPECTION.)
19. Carry out the mechanical system test. (Refer to 05–17B MECHANICAL SYSTEM TEST [GF4A-EL].)

Service item	Test item		
	Line pressure test	Stall test	Time lag test
Automatic transaxle replacement	○		
Automatic transaxle overhaul	○	○	○
Torque converter replacement	○	○	
Oil pump replacement	○		
Clutch system replacement	○		○
Differential replacement	○		

20. Carry out the road test. (Refer to 05–17B ROAD TEST [GF4A-EL].)

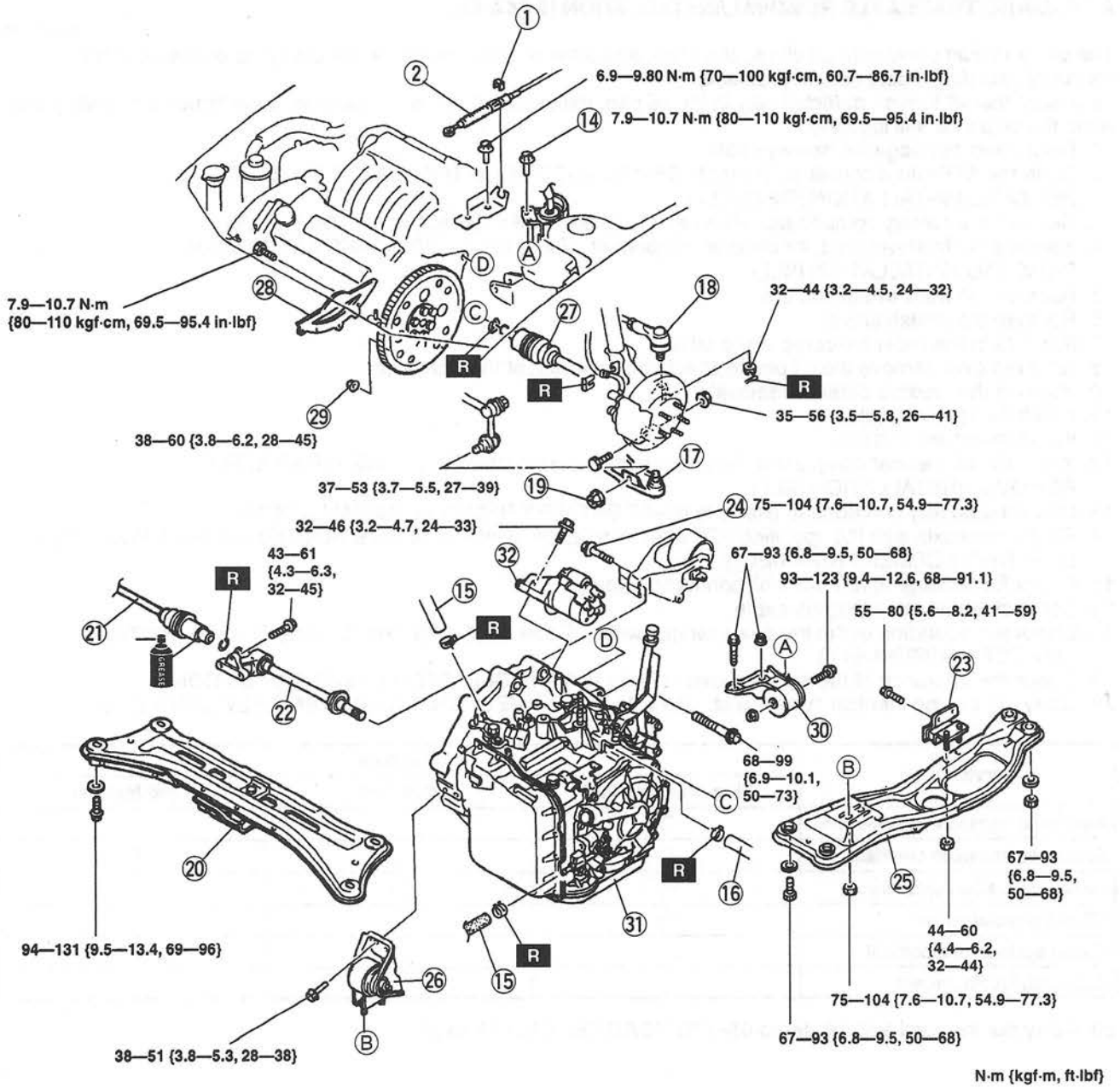

N·m {kgf·m, ft·lbf}

W6U517WDU

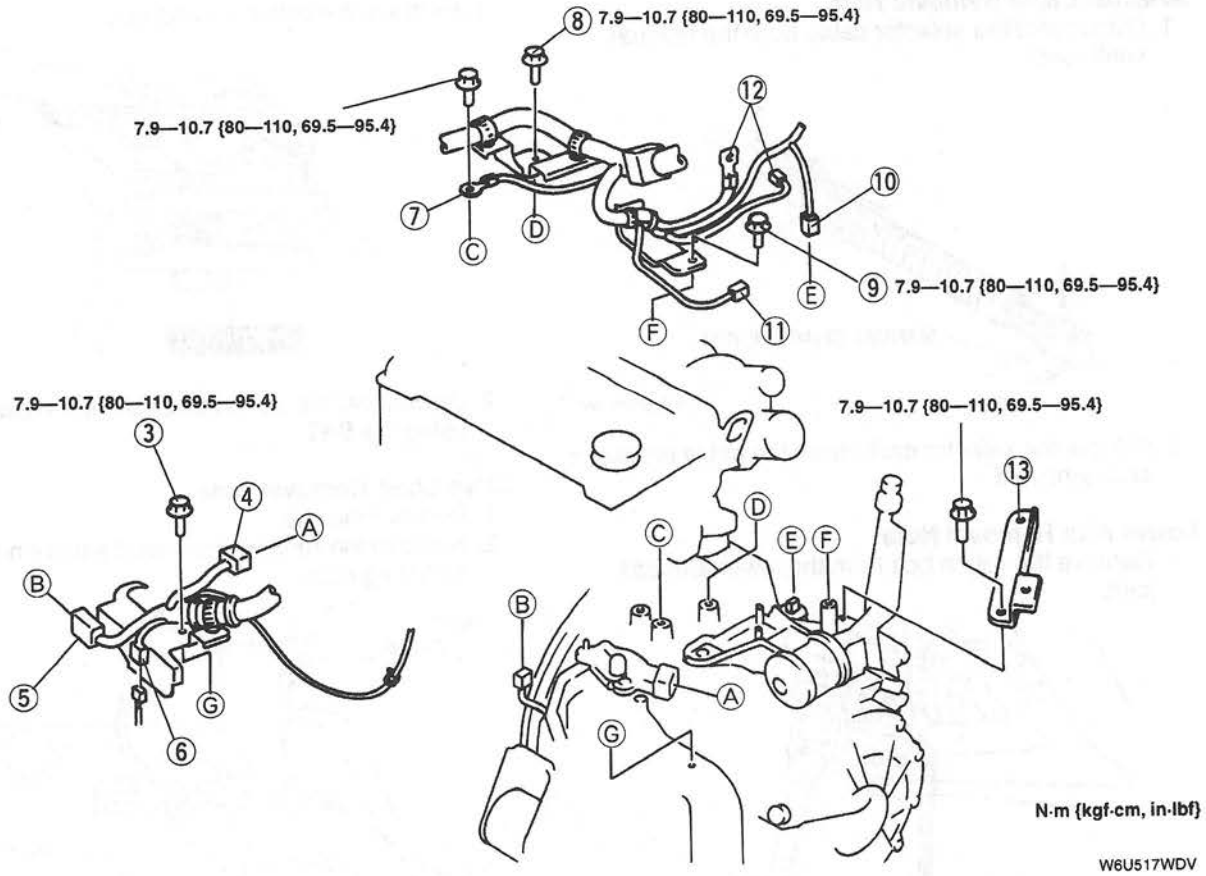

1	Clip
2	Selector cable ☞ Removal Note ☞ Installation Note
3	Bolt
4	Transaxle range switch connector
5	Solenoid valve connector
6	Oxygen sensor connector
7	Ground
8	Bolt
9	Bolt
10	Vehicle speedometer sensor connector
11	Input/turbine speed sensor connector
12	Starter harness
13	Engine mount stay
14	Fuel filter mounting bolts
15	Oil hose ☞ 05–17B OIL COOLER REMOVAL/INSTALLATION [GF4A-EL]
16	Breather hose ☞ Installation Note
17	Lower arm ☞ Removal Note ☞ Installation Note
18	Tie-rod end ☞ Removal Note ☞ Installation Note

19	Stabilizer control link nut
20	Transverse member
21	Drive shaft ☞ Removal Note ☞ Installation Note
22	Joint shaft ☞ Installation Note
23	No.5 engine mount rubber
24	No.1 engine mount bolts ☞ Installation Note
25	Engine mount member ☞ Removal Note ☞ Installation Note
26	No.2 engine mount ☞ Installation Note
27	Drive shaft ☞ Removal Note
28	Undercover
29	Torque converter nuts ☞ Removal Note
30	No.4 engine mount
31	Transaxle ☞ Removal Note ☞ Installation Note
32	Starter

Selector Cable Removal Note

1. Disconnect the selector cable from the manual shaft lever.

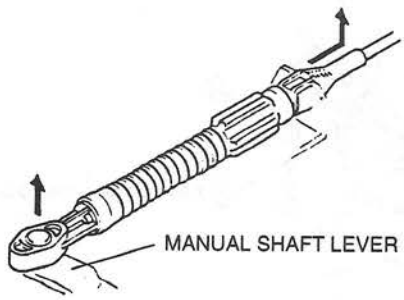

W6U517WDW

2. Pull out the selector cable from the cable bracket and remove it.

Lower Arm Removal Note

1. Remove the clinch bolt from the lower arm ball joint.

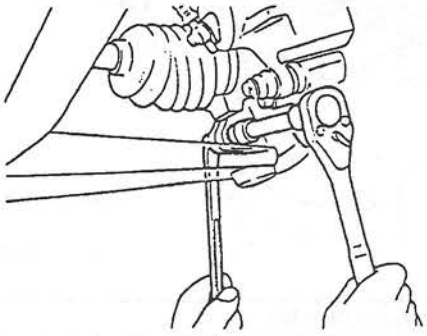

W6U517WDX

2. Wrap a rag around the ball joint dust boot.
3. Pry the lower arm out of the knuckle.

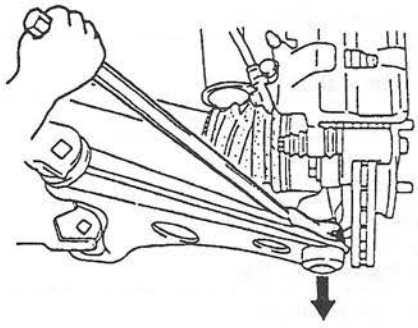

W6U517WDY

Tie-Rod End Removal Note

Caution

- **The sharp edges of the SST can slice the tie-rod end dust boot. Install the SST so that the sharp edges are between the dust boot and the knuckle.**

1. Remove the cotter pin and nut.

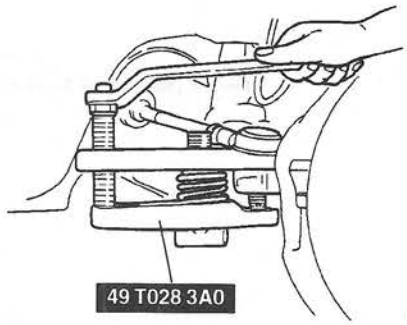

W6U517WDZ

2. Disconnect the tie-rod end from the knuckle by using the **SST**.

Drive Shaft Removal Note

1. Remove the clip.
2. Remove the ABS wheel-speed sensor harness mounting nuts.

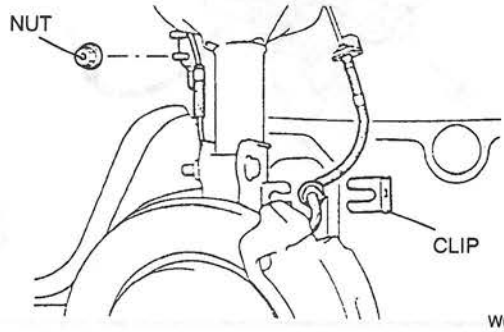

W6U517WE0

3. Separate the driver side drive shaft from the joint shaft by using a brass bar and a hammer.

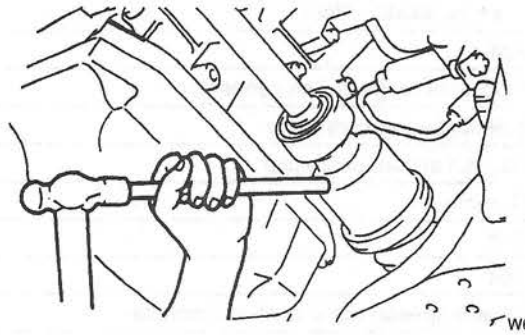

W6U517WE1

Caution

- **The sharp edges of the drive shaft snap ring can slice or puncture the oil seal. Be careful when removing the drive shaft from the transaxle.**

4. Separate the passenger side drive shaft from the transaxle by prying with a bar inserted between the outer ring and the transaxle, as shown in the figure.

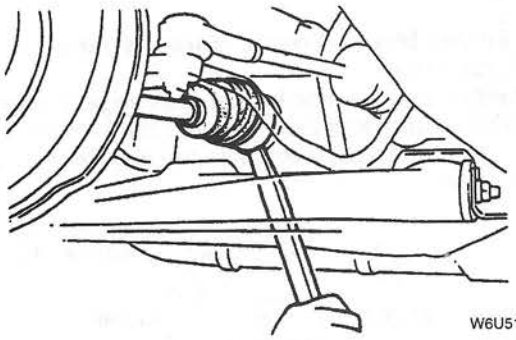
W6U517WE2

5. Suspend the drive shaft with a rope.
6. Install the **SST** into the transaxle to hold the side gear.

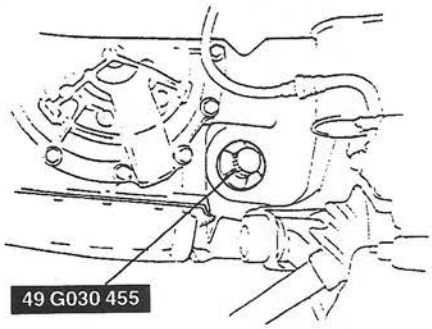

W6U517WE3

Engine Mounting Member Removal Note

Caution
- **To prevent damage to the body, insert a rag into the gap between the fender and body, when installing the SST.**

1. Support the engine by using the **SST** before removing the engine mounting member.



W6U517WE4

2. Remove the engine mounting member.

Torque Converter Nuts Removal Note
Hold the drive plate and remove the torque converter nuts.

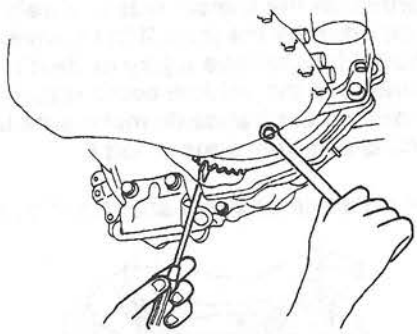
W6U517WE5

Transaxle Removal Note
1. Loosen the **SST** (engine support) and lean the engine toward the transaxle.

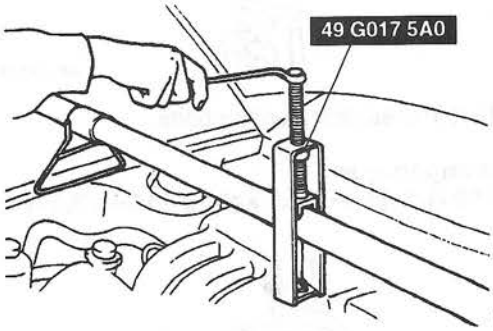

W6U517WE6

Warning
- **Verify that the transaxle is securely supported by the jack. If the transaxle should fall, serious injury or death and damage to the vehicle could result. Before removing the transaxle make sure that the jack is securely supporting it.**

2. Support the transaxle on a jack.
3. Remove the transaxle mounting bolts.
4. Remove the transaxle.

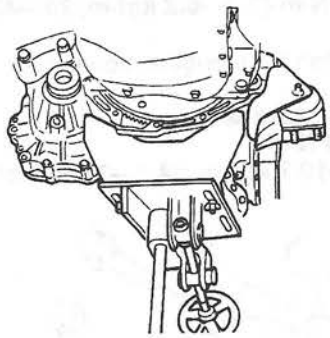
W6U517WE7

Transaxle Installation Note

Warning

- **Verify that the transaxle is securely supported by the jack. If the transaxle should fall, serious injury or death and damage to the vehicle could result. Before removing the transaxle make sure that the jack is securely supporting it.**

1. Set the transaxle on a jack and lift it into place.

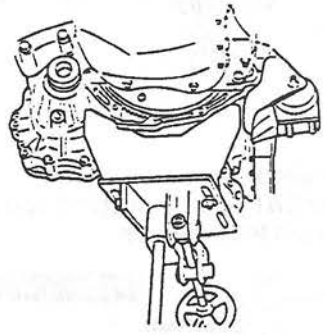

W6U517WE8

2. Install the transaxle mounting bolts.

Tightening torque
68—99 N·m {6.9—10.1 kgf·m, 50.0—73.0 ft·lbf}

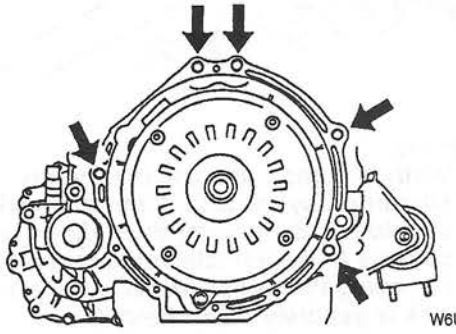

W6U517WE9

3. Install the torque converter nuts.

Tightening torque
38—60 N·m {3.8—6.2 kgf·m, 28—45 ft·lbf}

4. Hand tighten No.4 engine mount nuts.

Tightening torque
75—104 N·m
{7.6—10.7 kgf·m, 54.9—77.3 ft·lbf}

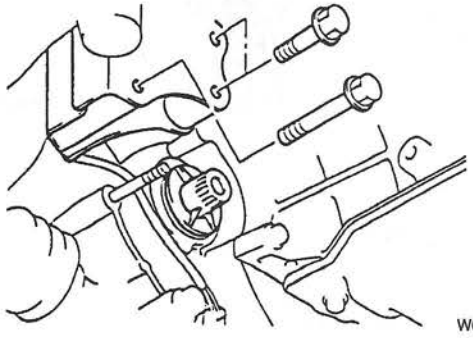

W6U517WEA

No.2 Engine Mount, Engine Mount Member Installation Note

1. Position the direction indicator on engine mount member bushings facing toward the front side, and install the bushings onto the engine mount member.

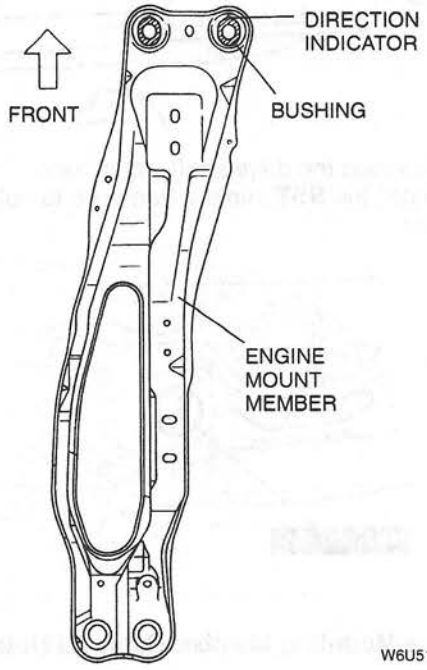

W6U517WF8

2. To install the engine mount member, put the No.2 engine mount stud bolts through the engine mount member installation holes.
3. Install the engine mount member bolts A and nuts A.

Tightening torque
A: 67—93 N·m {6.8—9.5 kgf·m, 50—68 ft·lbf}

4. Loosely tighten the No.2 engine mount nuts B.
5. Remove the **SST** (engine support).
6. Tighten the No.2 engine mount nuts B.

Tightening torque
B: 75—104 N·m {7.6—10.7 kgf·m, 55—77 ft·lbf}

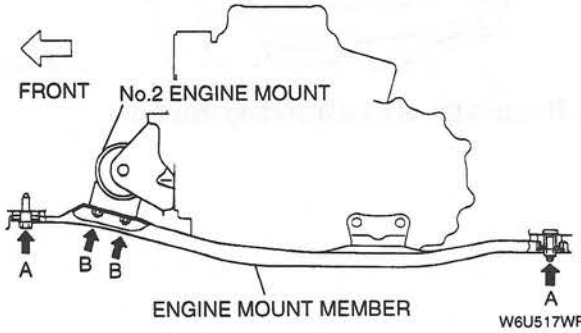

W6U517WF9

No.1 Engine Mount Bolt Installation Note

Caution
- **Align the transaxle bolt holes and the engine mount exactly. Any misalignment can result in boltes and bolt holes becoming damaged or stripped during installation.**

1. Use the **SST** (engine support) to make sure the transaxle bolt holes and No.1 engine mount align.
2. Tighten the bolts to the specified torque.

Joint Shaft Installation Note

1. Remove the **SST** from the transaxle case.

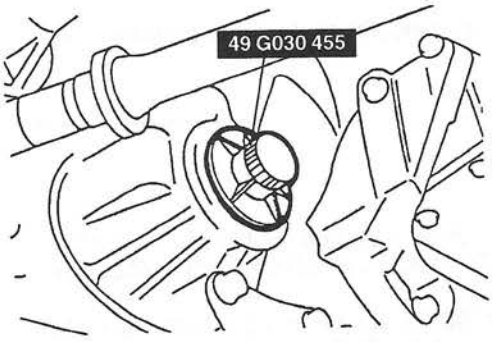

W6U517WEF

2. Verify that there is no damage to the oil seal.
3. Hand tighten A bolts.
4. Tighten the A, B bolts to the specified torque.

Tightening torque
43—61 N·m {4.3—6.3 kgf·m, 32—45 ft·lbf}

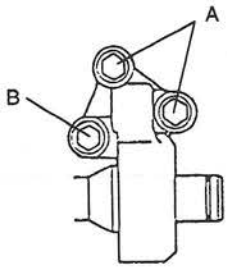

W6U517WEG

Drive Shaft Installation Note

Refer to 03–13 JOINT SHAFT REMOVAL/INSTALLATION, Clip Installation Note.

Lower Arm Installation Note

1. Connect the lower arm to the knuckle and tighten the clinch bolt.

Tightening torque
44—58 N·m {4.4—6.0 kgf·m, 32—43 ft·lbf}

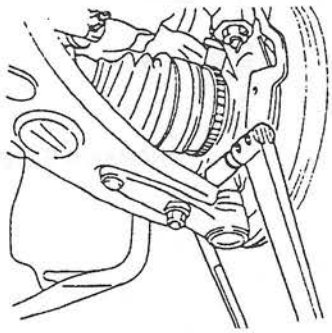
W6U517WEH

2. Install the ABS wheel-speed sensor harness mounting nuts.

Tightening torque
7.9—10.7 N·m
{80—110 kgf·cm, 69.5—95.4 in·lbf}

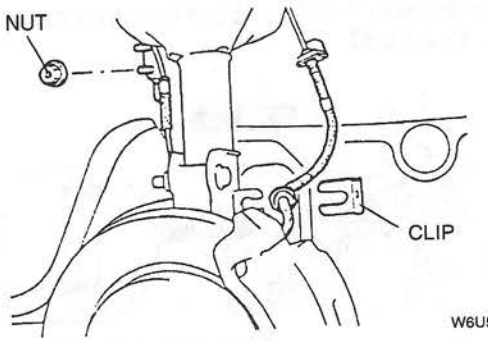

W6U517WEJ

3. Install the clip.

Tie-Rod End Installation Note

1. Install the locknut.

Tightening torque
43—56 N·m {4.3—5.8 kgf·m, 32—41 ft·lbf}

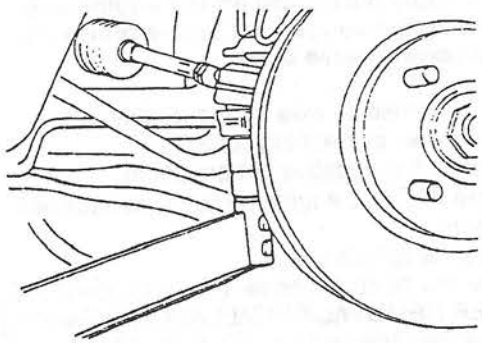
W6U517WEK

2. Secure the locknut by using a new cotter pin.

Breather Hose Installation Note

- Position the marking on the oil hose side facing up and install it.

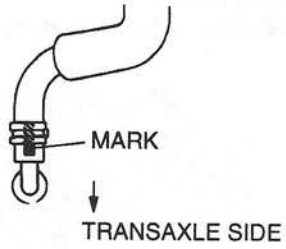

W6U517WEL

Selector Cable Installation Note

1. Install the selector cable to the cable bracket.
2. Install the clip to the selector cable.

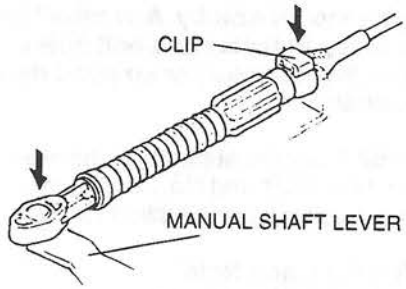

W6U517WEM

3. Connect the selector cable to the manual shaft lever.

OIL SEAL REMOVAL/INSTALLATION [GF4A-EL]

W6U517W32

1. Remove the drive shaft and joint shaft. (Refer to 05–17B TRANSAXLE REMOVAL/INSTALLATION [GF4A-EL].)
2. Remove the oil seal by using a screwdriver.
3. Tap the new oil seal into the transaxle case by using the **SST**.

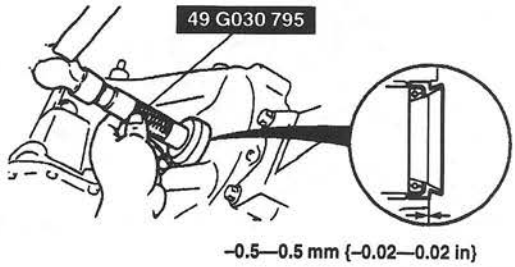

–0.5—0.5 mm {–0.02—0.02 in}

W6U517WEN

4. Install the drive shaft and joint shaft. (Refer to 05–17B TRANSAXLE REMOVAL/INSTALLATION [GF4A-EL].)
5. Using the **SST** and a hammer, tap the new oil seal in evenly until the **SST** contacts the transaxle case.
6. Coat the lip of the oil seal with ATF.

CONTROL VALVE BODY REMOVAL/INSTALLATION [GF4A-EL]

W6U517W33

Warning

- **When the transaxle and ATF are hot, they can badly burn. Turn off the engine and wait until they are cool before removing the control valve body.**

1. Clean the transaxle exterior thoroughly with a steam cleaner or cleaning solvents.
2. Disconnect the negative battery cable.
3. Drain the ATF and engine coolant into separate containers.
4. Remove the splash shield.
5. Remove the oil cooler hose. (Refer to 05–17B OIL COOLER REMOVAL/INSTALLATION [GF4A-EL].)
6. Remove the radiator hose. (Refer to 01–12 RADIATOR REMOVAL/INSTALLATION.)
7. Remove the control valve body cover and gasket.

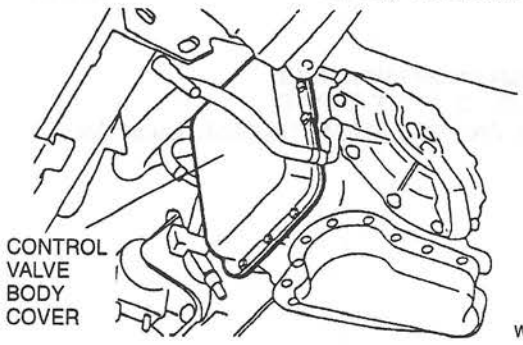

W6U517WEP

8. Disconnect the solenoid connectors and transaxle fluid temperature sensor connector.

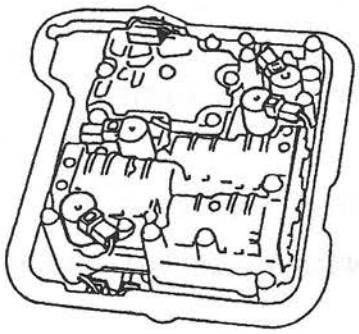

W6U517WEQ

9. Remove the control valve body component.

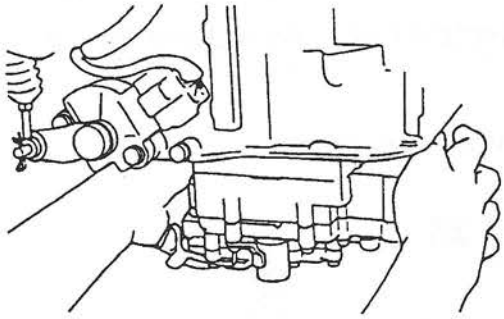

W6U517WER

10. Align the manual plate and the manual valve.

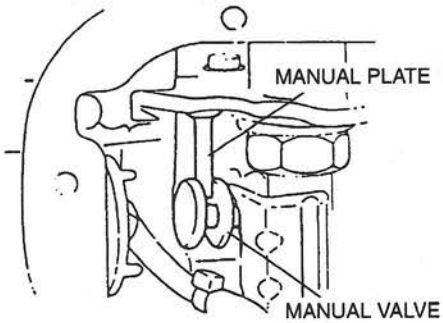

W6U517WES

11. Install the control valve body component.

Tightening torque
10.8—14.7 N·m
{110—150 kgf·cm, 95.5—130.2 in·lbf}

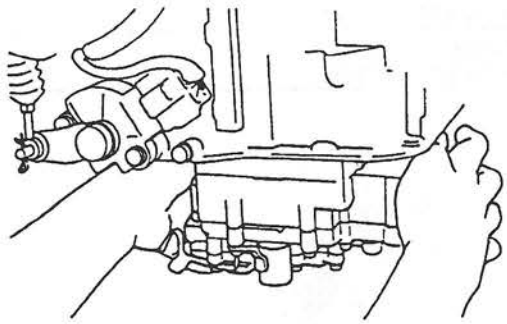

W6U517WET

12. Match the harness colors and connect the solenoid connectors and transaxle fluid temperature sensor connector.
13. Install a new gasket and the control valve body cover.

Tightening torque
8.4—10.7 N·m
{85—110 kgf·cm, 73.7—95.4 in·lbf}

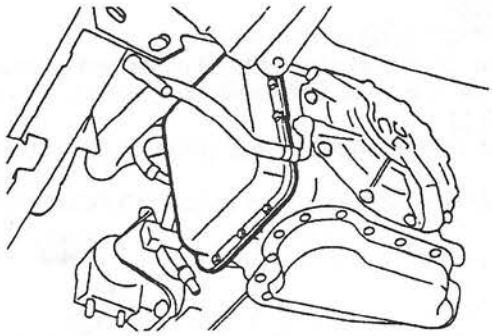

W6U517WEU

14. Install the radiator hose. (Refer to 01–12 RADIATOR REMOVAL/INSTALLATION.)
15. Install the oil cooler hose. (Refer to 05–17B OIL COOLER REMOVAL/INSTALLATION [GF4A-EL].)
16. Install the splash shield.
17. Fill the radiator and reservoir with the specified amount and type of engine coolant. (Refer to 01–12 ENGINE COOLANT LEVEL INSPECTION.)
18. Connect the negative battery cable.
19. Fill the transaxle with the specified ATF. (Refer to 05–17B AUTOMATIC TRANSAXLE FLUID (ATF) REPLACEMENT [GF4A-EL].)
20. Check for leakage of ATF from the oil pan or the oil hose connecting points.
21. Carry out the mechanical system test. (Refer to 05–17B MECHANICAL SYSTEM TEST [GF4A-EL].)
22. Carry out the road test. (Refer to 05–17B ROAD TEST [GF4A-EL].)

OIL COOLER REMOVAL/INSTALLATION [GF4A-EL]

W6U517W34

1. Disconnect the negative battery cable.
2. Remove the fresh-air duct, air cleaner component. (Refer to 01–13B INTAKE-AIR SYSTEM REMOVAL/INSTALLATION [KL].)
3. Remove in the order indicated in the table.
4. Install in the reverse order of removal.
5. Install the fresh-air duct, air cleaner component. (Refer to 01–13B INTAKE-AIR SYSTEM REMOVAL/INSTALLATION [KL].)
6. Add ATF to the specified level. (Refer to 05–17B AUTOMATIC TRANSAXLE FLUID (ATF) REPLACEMENT [GF4A-EL].)
7. Connect the negative battery cable.
8. Inspect for oil leakage from the oil pipes and oil hoses.
9. Inspect the ATF level and condition. (Refer to 05–17B AUTOMATIC TRANSAXLE FLUID (ATF) INSPECTION [GF4A-EL].)
10. Carry out the line pressure test. (Refer to 05–17B MECHANICAL SYSTEM TEST [GF4A-EL], Line Pressure Test.)
11. Carry out the road test. (Refer to 05–17B ROAD TEST [GF4A–EL].)

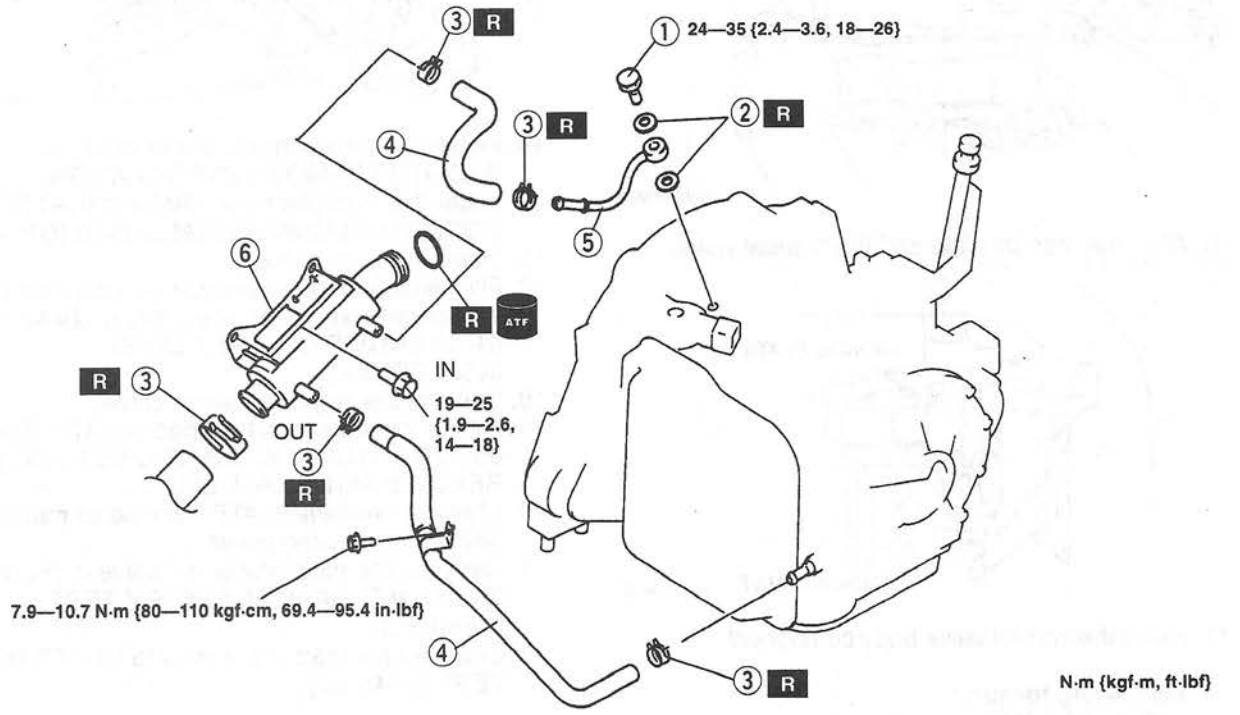

W6U517WEV

1	Connector bolt
2	Washers
3	Hose clamp ☞ Installation Note
4	Oil hose ☞ Installation Note

5	Oil pipe ☞ Installation Note
6	Oil cooler ☞ Installation Note

Oil Cooler Installation Note

1. The automatic transaxle oil cooler flushing must be performed whenever a transaxle is removed for service to remove existing fluid which may be contaminated and to prevent contamination of new fluid. The flushing must be performed after installation of the overhauled replacement of the transaxle.
2. Follow the instruction in the manufacture's publication for flushing the automatic transaxle oil cooler.
3. Align the marks, and slide the oil hose onto the oil pipe until it is full seated as shown.

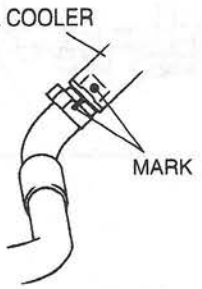

W6U517WEW

Oil Pipe Installation Note

Note

- In order to prevent ATF leakage, replace the hose. When any damages are found inside or outside of the hose, especially on areas contacting with pipes.

- Apply compressed air to the cooler-side pipe opening, and blow any remaining dust and foreign material from the cooler pipes. Compressed air should be applied for no less than one minute.

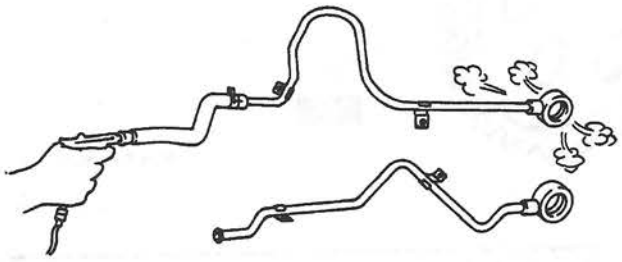

W6U517WF7

Oil Hose Installation Note

Oil cooler side

1. Position the marking on the oil hose side facing up and install it.

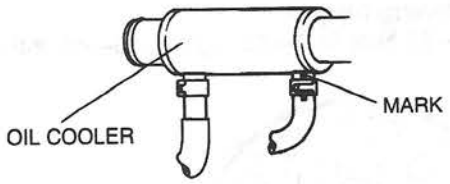

W6U517WEX

2. Position the marking on the oil hose side facing to the radiator and install it.

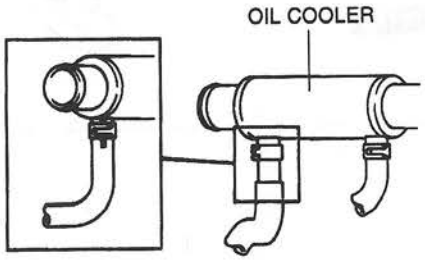

W6U517WF6

Transaxle side

1. Position the marking on the oil hose side facing up and install it.

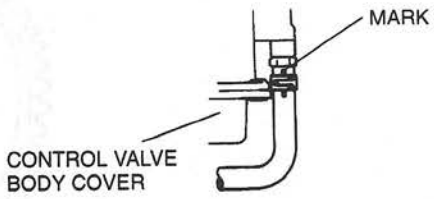

W6U517WEY

2. Aligen the marks, and slide the oil hose onto oil pipe until it is full seated as shown.

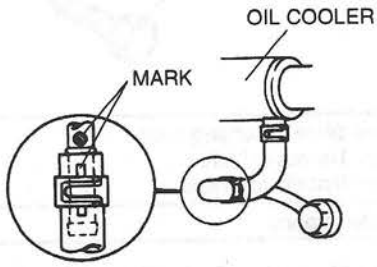

W6U517WEZ

Hose Clamp Installation Note

1. Install the hose clamp onto the hose. If reusing the hose, install the new hose clamp exactly into the mark left by the previous hose clamp.

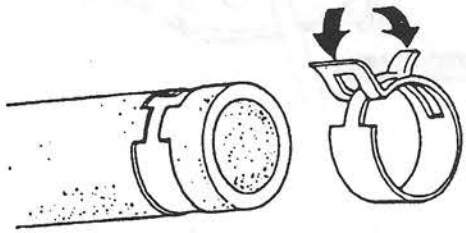

W6U517WF0

2. Verify that the hose clamp does not interfere with any other parts.

DRIVE PLATE REMOVAL/INSTALLATION [GF4A-EL]

W6U517W35

1. Remove in the order indicated in the table.
2. Install in the reverse order of removal.

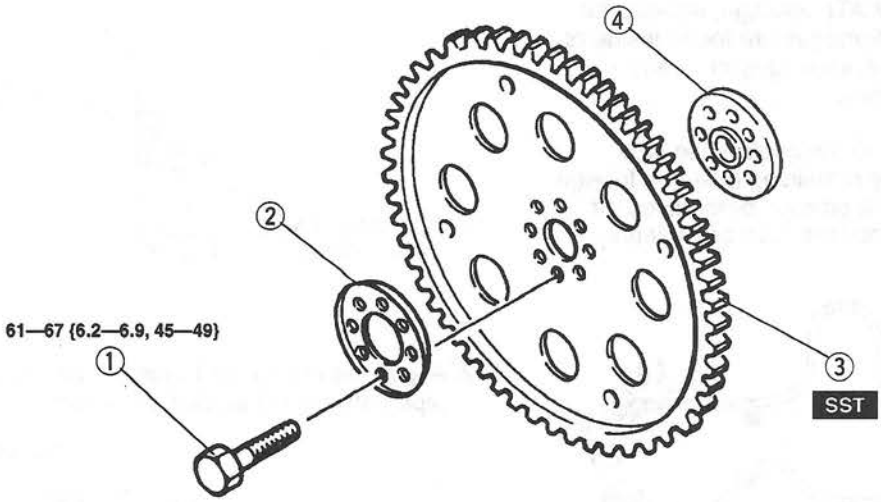

N·m {kgf·m, ft·lbf}

W6U517WF1

1	Drive plate mounting bolts ☞ Removal Note ☞ Installation Note
2	Backing plate
3	Drive plate
4	Adapter

Drive Plate Mounting Bolts Removal Note

1. Set the **SST** or equivalent against the drive plate.
2. Remove the bolts and the drive plate.

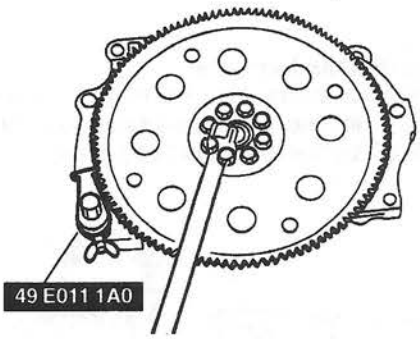

W6U517WF2

Drive Plate Mounting Bolts Installation Note

1. Set the **SST** or equivalent against the drive plate.
2. Tighten the drive plate mounting bolts in two or three steps in the order shown.

Tightening torque
61—67 N·m {6.2—6.9 kgf·m, 45—49 ft·lbf}

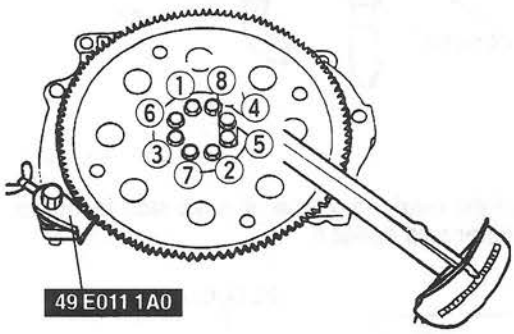

W6U517WF3

05–18 AUTOMATIC TRANSAXLE SHIFT MECHANISM

INTERLOCK CABLE INSPECTION 05–18–1
SELECTOR LEVER INSPECTION 05–18–1
SELECTOR LEVER ADJUSTMENT 05–18–2
INDICATOR PANEL ADJUSTMENT 05–18–2
SELECTOR LEVER AND CABLE REMOVAL/INSTALLATION 05–18–3
Indicator Panel Removal Note 05–18–4
Selector Lever Removal Note 05–18–4
Selector Cable Removal Note 05–18–4
Interlock Cable Installation Note 05–18–4
Selector Cable Installation Note 05–18–5
Selector Lever Installation Note 05–18–5
Indicator Panel Installation Note 05–18–5
SELECTOR LEVER DISASSEMBLY/ASSEMBLY 05–18–6
Connector Disassembly Note 05–18–7
Indicator Panel Assembly Note 05–18–7

INTERLOCK CABLE INSPECTION

W6U518W01

1. Remove the interlock cable and lock unit.
2. With the slider pin protrusion (dimension A) as specified below, verify that the interlock cable moves freely in the lock unit.

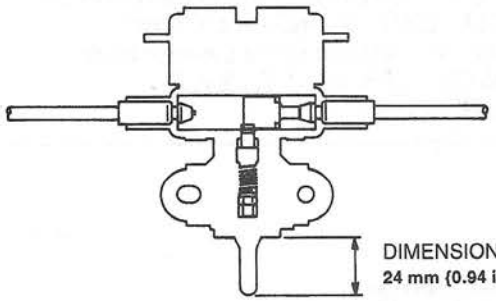

W6U518WA0

3. If not as specified, replace the interlock cable.
4. Install the interlock cable and lock unit. (Refer to 05–18 SELECTOR LEVER AND CABLE REMOVAL/INSTALLATION.)

SELECTOR LEVER INSPECTION

W6U518W02

1. Turn the ignition switch to ON (engine OFF).
2. With the brake pedal depressed, verify that there is a "click" at each range when shifted in the pattern shown.
3. Verify that the selector lever can only be shifted as shown.
4. Verify that the position of the selector lever and the indicator are aligned.

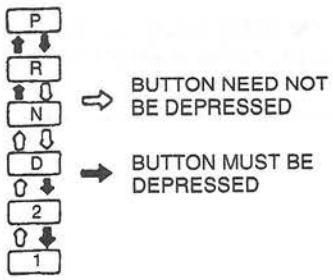

W6U518WA1

5. If not as specified, adjust the indicator panel. (Refer to 05–18 INDICATOR PANEL ADJUSTMENT.)
6. Start the engine.
7. Verify that the vehicle operates in each selected range.

SELECTOR LEVER ADJUSTMENT

W6U518W03

1. Remove the front console. (Refer to 09–17 FRONT CONSOLE REMOVAL/INSTALLATION.)
2. Shift the selector lever to P position (KL), or D range (FS).
3. Remove the indicator screws and lift up the indicator panel.

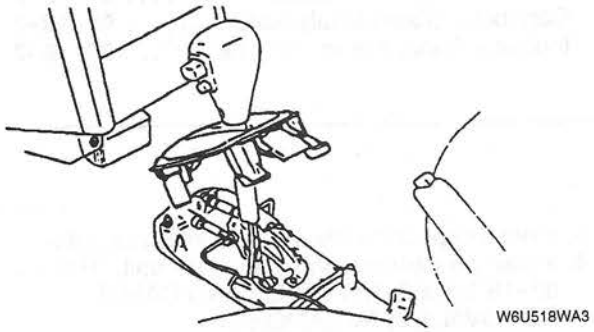

W6U518WA3

4. Slide the lock cover.
5. Disconnect the set button.
6. Shift the selector lever to P position (KL), or D range (FS).
7. Connect the set button.
8. Slide the lock cover to lock the set button.

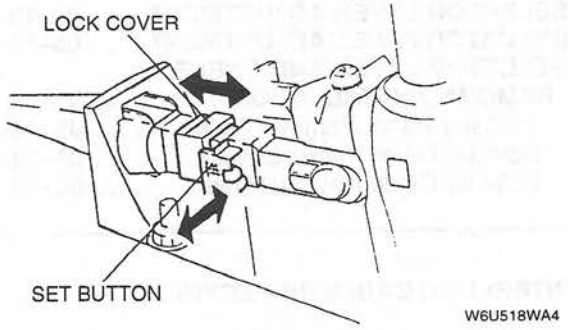

W6U518WA4

9. Install and adjust the indicator panel. (Refer to 05–18 SELECTOR LEVER DISASSEMBLY/ASSEMBLY.)
10. Install the front console. (Refer to 09–17 FRONT CONSOLE REMOVAL/INSTALLATION.)
11. Verify correct operation of the selector lever. (Refer to 05–18 SELECTOR LEVER INSPECTION.)

INDICATOR PANEL ADJUSTMENT

W6U518W04

1. Loosen the indicator panel screws.
2. Shift the selector lever to P position.
3. Align the alignment screws in the slider with the holes in the indicator panel. Install heavy-gauge wire to hold the slider.

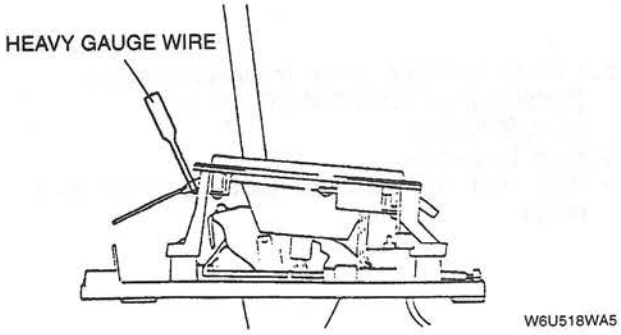

W6U518WA5

4. Tighten the indicator panel screws in the order shown in the figure.

Tightening torque
2.0—2.9 N·m {20—30 kgf·cm, 18—26 in·lbf}

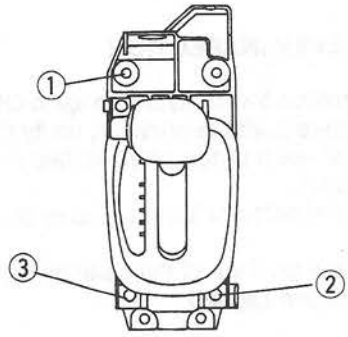

W6U518WA6

5. Remove the heavy gauge wire.
6. Verify that the selector lever properly aligns with the indicator in each range.

SELECTOR LEVER AND CABLE REMOVAL/INSTALLATION

W6U518W05

1. Disconnect the negative battery cable.
2. Remove the steering colum cover. (Refer to 06–12 STEERING WHEEL AND COLUMN REMOVAL/INSTALLATION.)
3. Remove the side panel. (Refer to 09–17 SIDE PANEL REMOVAL/INSTALLATION.)
4. Remove the lower panel. (Refer to 09–17 LOWER PANEL REMOVAL/INSTALLATION.)
5. Remove the front console. (Refer to 09–17 FRONT CONSOLE REMOVAL/INSTALLATION.)
6. Remove the heater unit. (Refer to 07–11 HEATER UNIT REMOVAL/INSTALLATION.)
7. Remove the SAS unit braket. (Refer to 08–10 SAS UNIT BRAKET REMOVAL/INSTALLATION.)
8. Remove in the order indicated in the table.
9. Install in the reverse order of removal.
10. Install the SAS unit braket. (Refer to 08–10 SAS UNIT BRAKET REMOVAL/INSTALLATION.)
11. Install the heater unit. (Refer to 07–11 HEATER UNIT REMOVAL/INSTALLATION.)
12. Install the front console. (Refer to 09–17 FRONT CONSOLE REMOVAL/INSTALLATION.)
13. Install the lower panel. (Refer to 09–17 LOWER PANEL REMOVAL/INSTALLATION.)
14. Install the side panel. (Refer to 09–17 SIDE PANEL REMOVAL/INSTALLATION.)
15. Install the steering colum cover. (Refer to 06–12 STEERING WHEEL AND COLUMN REMOVAL/INSTALLATION.)
16. Connect the negative battery cable.

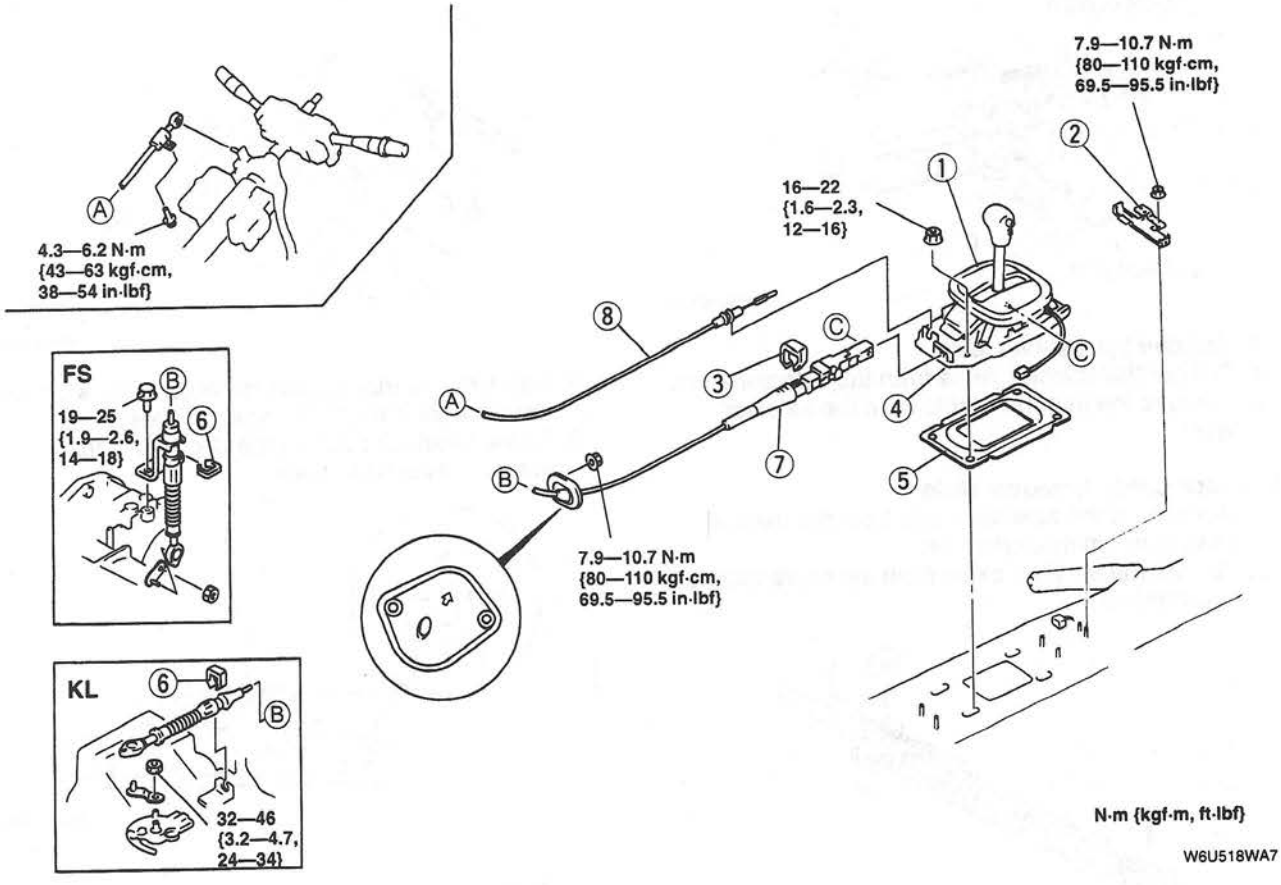

W6U518WA7

1	Indicator panel ☞ Removal Note ☞ Installation Note
2	Braket
3	Clip
4	Selector lever ☞ Removal Note ☞ Installation Note ☞ 05–18 SELECTOR LEVER DISASSEMBLY/ASSEMBLY ☞ 05–18 SELECTOR LEVER INSPECTION

5	Insulator
6	Clip
7	Selector cable ☞ Removal Note ☞ Installation Note
8	Interlock cable ☞ Installation Note

Indicator Panel Removal Note
Remove the indicator screws and lift up the indicator panel.

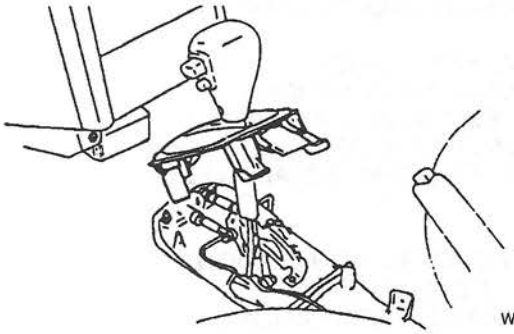

W6U518WA8

Selector Lever Removal Note
1. Slide the lock cover.
2. Disconnect the set button.

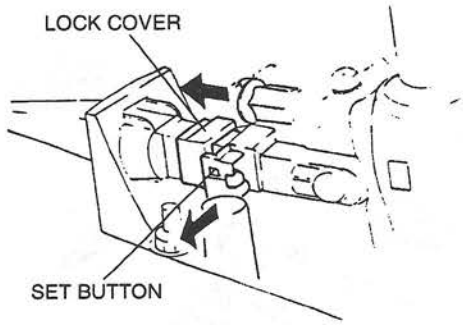

W6U518WA9

3. Remove the selector lever.
4. Pull out the selector cable from the selector lever.
5. Remove the interlock cable from the selector lever.

Selector Cable Removal Note
1. Disconnect the selector cable from the manual shaft lever on the transaxle.
2. Pull out the selector cable from the cable bracket and remove it.

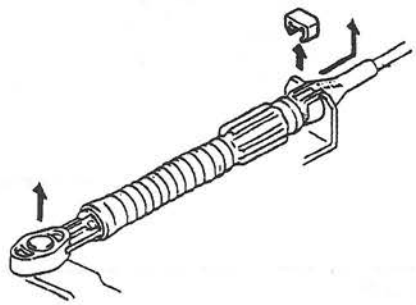
W6U518WAA

Interlock Cable Installation Note
1. Verify that the ignition switch is in LOCK position, and shift the selector lever in P position.
2. Install the lock unit.

Tightening torque
4.3—6.2 N·m {43—63 kgf·cm, 38—54 in·lbf}

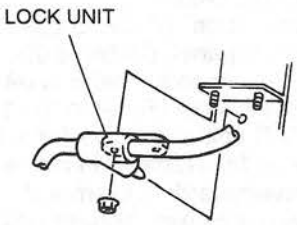

W6U518WAB

3. Install the interlock cable. (key side)

Tightening torque
4.3—6.2 N·m {43—63 kgf·cm, 38—54 in·lbf}

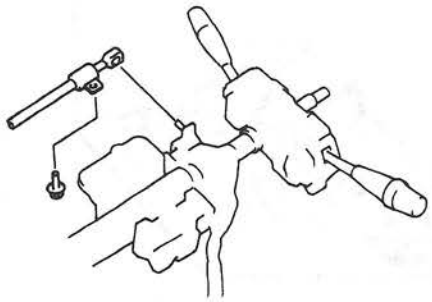
W6U518WAC

4. Install the interlock cable (selector lever side) onto the interlock cam on the selector lever.
5. Fit the interlock cable in the U-grove in the selector lever base plate.

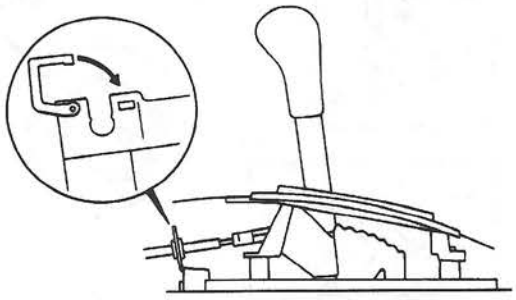
W6U518WAD

Caution
- **Applying load to the interlock cable while pressing the lock piece in can affect the lock unit operation.**

Note
- Step 6 and 7 are for the interlock cable replacement only.

6. Press the lock piece in until it is locked.

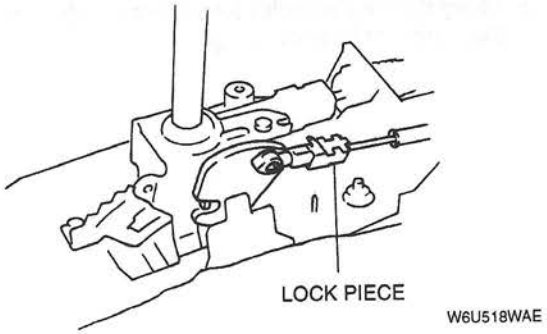

W6U518WAE

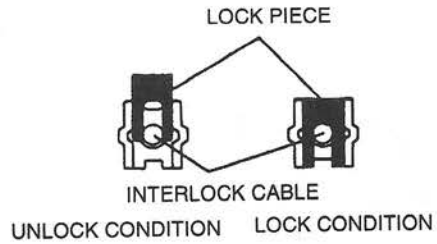

W6U518WAF

7. Remove the lock unit lock pin in the order shown in the figure.

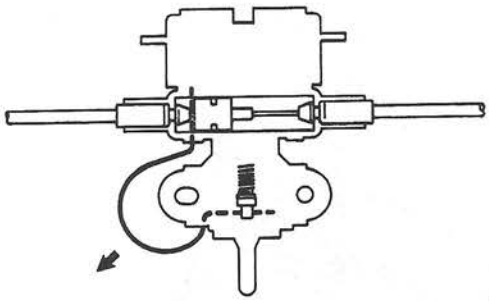

W6U518WAG

Selector Cable Installation Note

1. Shift the selector lever and manual shaft to P position (KL), or D range (FS).

Caution

- **Bending the selector cable in the manner shown in the figure will damage the cable and cause it to become loose during shifting, when handling and installing the selector cable, hold it straight.**



W6U518WAH

2. Install the selector cable to the cable bracket.
3. Install the clip to the selector cable.
4. Connect the selector cable to the manual shaft lever on the transaxle.

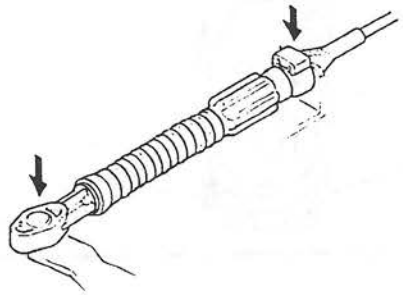

W6U518WAJ

Selector Lever Installation Note

1. Install the selector lever.
2. Install the selector cable to the selector lever.

Tightening torque
16—22 N·m {1.6—2.3 kgf·m, 12—16 ft·lbf}

3. Shift the selector lever to P position (KL), or D range (FS).
4. Connect the set button.
5. Slide the lock cover and lock the set button.

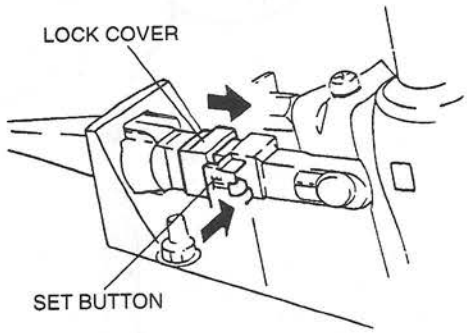

W6U518WAK

Indicator Panel Installation Note

1. Shift the selector lever to P position.
2. Align the alignment screws in the slider with the holes in the indicator panel. Install heavy-gauge wire to hold the slider.

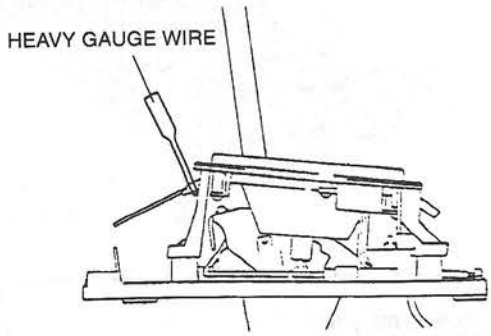

W6U518WAL

3. Tighten the indicator panel screws in the order shown in the figure.

Tightening torque
2.0—2.9 N·m {20—30 kgf·cm, 18—26 in·lbf}

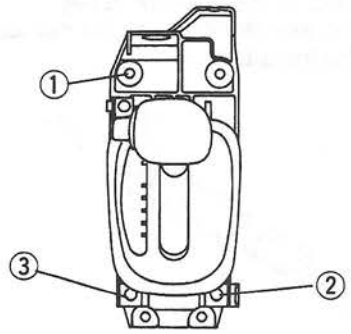

W6U518WAM

4. Remove the heavy gauge wire.
5. Verify that the selector lever properly aligns with the indicator in each range.

SELECTOR LEVER DISASSEMBLY/ASSEMBLY

W6U518W06

1. Disassemble in the order indicated in the table.
2. Assemble in the reverse orde of disassembly.

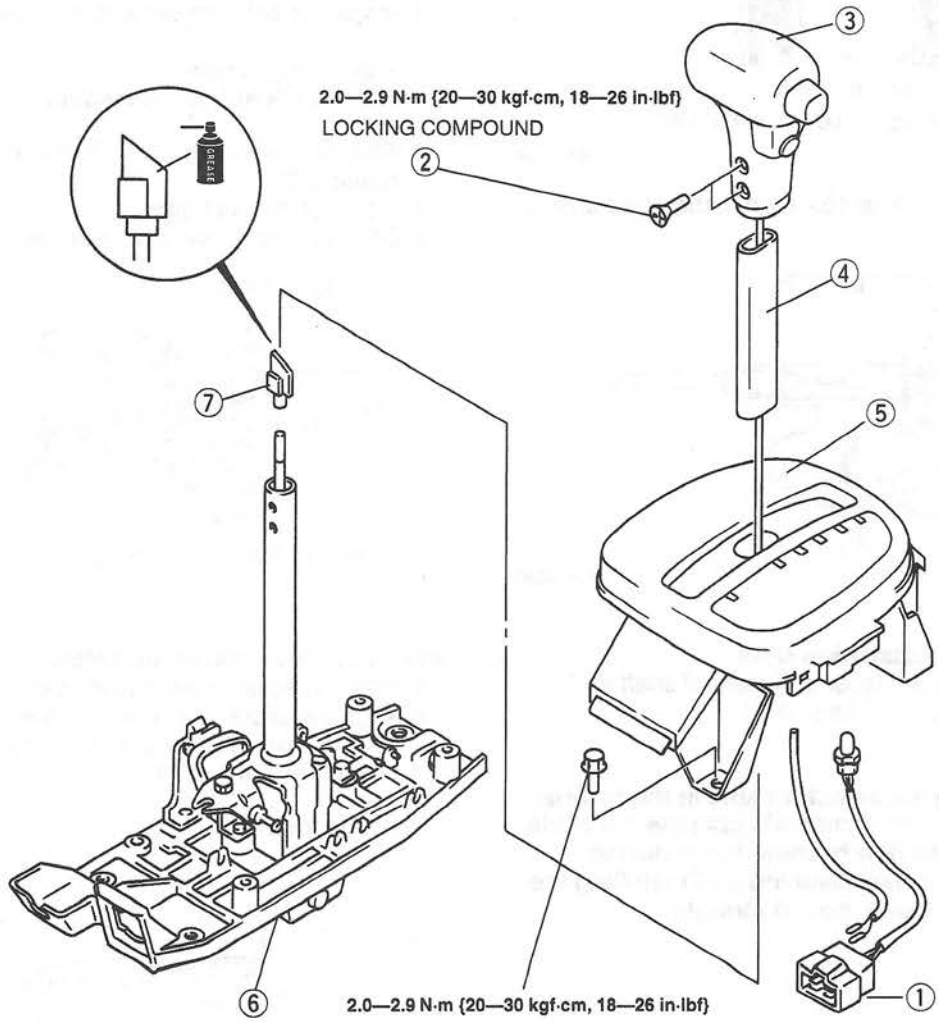

W6U518WAN

1	Connector ☞ Disassembly Note
2	Screws
3	Selector lever knob
4	Cover

5	Indicator panel ☞ Assembly Note
6	Selector lever
7	Cam

Connector Disassembly Note

1. Insert a thin piece of metal from the terminal side of the connector, and lift up the terminal locking tab.
2. Pull the terminal out of the connector.

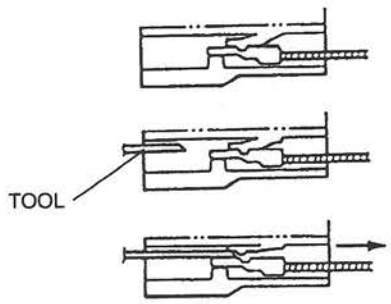

W6U518WAP

Indicator Panel Assembly Note

1. Shift the selector lever to P position.
2. Align the alignment screws in the slider with the holes in the indicator panel. Install heavy-gauge wire to hold the slider.

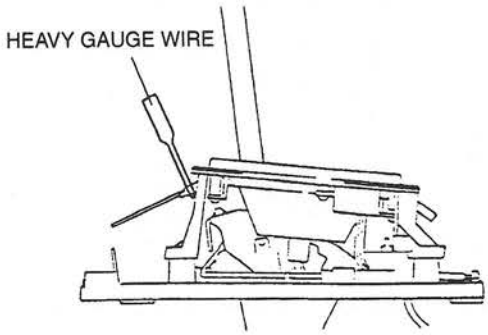

W6U518WAQ

3. Temporarily install the indicator panel to the selector lever bracket.
4. Tighten the indicator panel screws in the order shown in the figure.

Tightening torque
2.0—2.9 N·m {20—30 kgf·cm, 18—26 in·lbf}

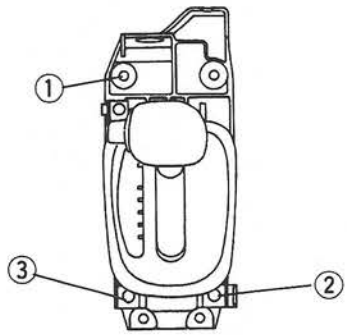

W6U518WAR

5. Remove the heavy gauge wire.
6. Verify that the selector lever properly aligns with the indicator panel in all ranges and positions.

05–50 TECHNICAL DATA

05 TRANSMISSION/TRANSAXLE 05–50–1

05 TRANSMISSION/TRANSAXLE

W6U550W01

Item			Engine	
			FS	KL
CLUTCH				
Transaxle type			G25M-R	
Clutch pedal				
Height		(mm {in})	194—202 {7.64—7.95} (with carpet)	
Free play		(mm {in})	5.0—14.0 {0.20—0.55}	
Distance to carpet when clutch fully disengaged (mm {in})		Minimum	38 {1.50} (with carpet)	
Clutch disc				
Facing thickness (mm {in})		Flywheel side	3.5 {0.14}	
		Pressure plate side	3.8 {0.15}	
Clutch fluid				
Type			SAE J1703, FMVSS116 DOT-3	
MANUAL TRANSAXLE				
Transaxle type			G25M-R	
Oil	Grade		API service GL-4 or GL-5	
	Viscosity	All season	SAE 75W–90	
		Above 10 °C {50 °F}	SAE 80W–90	
	Capacity	(L {US qt, Imp qt})	2.7 {2.9, 2.4}	
AUTOMATIC TRANSAXLE				
Transaxle type			LA4A-EL	GF4A-EL
Line pressure (kPa {kgf/cm^2, psi})	D, 2, 1	Idle	330—370 {3.34—3.75, 47—53}	420—530 {4.2—5.5, 60—78}
		Stall	1,158—1,269 {11.80—12.93, 168—184}	1,100—1,170 {11.2—12.0, 160—170}
	R	Idle	470—530 {4.81—5.41, 68—77}	730—1,010 {7.4—10.3, 110—146}
		Stall	1,790—2,020 {18.21—20.66, 259—294}	1,190—2,020 {19.4—20.7, 276—294}
	P, N	Idle	470—530 {4.81—5.41, 68—77}	—
Engine stall speed (rpm)	D, 2, 1		2,200—2,500	
	R		2,200—2,500	2,000—2,500
Time lag (second)	N–D		Below approx. 1.0	Below approx. 0.9
	N–R		Below approx. 1.0	Below approx. 1.1

Item		Engine	
		FS	KL
Transaxle fluid temperature (TFT) sensor (kΩ)	0—20 °C {32—58 °F}	100—37	—
	20 °C {58 °F}	—	2.441—2.894
	21—40 °C {59—104 °F}	37—16	—
	40 °C {104 °F}	—	1.193—1.374
	41—70 °C {105—158 °F}	16—5	—
	60 °C {140 °F}	—	0.6284—0.7084
	71—90 °C {159—194 °F}	5—2.7	—
	80 °C {176 °F}	—	0.3527—0.3865
	91—110 °C {195—230 °F}	2.7—1.5	—
	100 °C {212 °F}	—	0.2091—0.2245
	111—130 °C {231—266 °F}	1.5—0.8	—
	120 °C {248 °F}	—	0.1301—0.1372
	131—150 °C {267—302 °F}	0.8—0.54	—
	130 °C {266 °F}		0.1044—0.1090
Turbine shaft speed sensor (TSS) (Ω)		12—22	—
Input/turbine speed sensor (Ω)	ATF temperature: –40—160 °C {–40—320 °F}	—	235—604
Solenoid valves (Ω)	Shift solenoid No.1 (SS1)	12—22	—
	Shift solenoid No.2 (SS2)	12—22	—
	TCC	12.5—19.0	—
	Electronic pressure control (EPC)	3.7—5.92	—
	3–2 timing/coasting clutch solenoid (3–2T/CCS)	3.7—5.92	—
	Shift solenoid A	—	11—27
	Shift solenoid B	—	11—27
	Shift solenoid C	—	11—27
	TCC control	—	11—27
	3–2 timing	—	11—27
	Pressure control solenoid	—	9—18
Automatic transaxle fluid (ATF)	Type	ATF M-III or equivalent (e.g. Mercon®)	ATF M-III or equivalent (e.g. Dexron®II)
	Capacity (L {US qt, Imp qt})	8.3 {8.8, 7.3}	8.0 {8.5, 7.0}

05–60 SERVICE TOOLS

05 TRANSMISSION/TRANSAXLE SST . 05–60–1

05 TRANSMISSION/TRANSAXLE SST

W6U560W01

49 0259 770B Flare wrench nut  T0259770B	49 SE01 310A Clutch disc centering tool 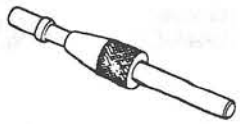 TSE01310A	49 1285 071 Bearing puller  T1285071X
49 B001 795 Oil seal installer 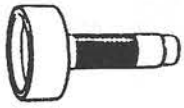 TB001795X	49 UN01 128 Adapter (LA4A-EL) 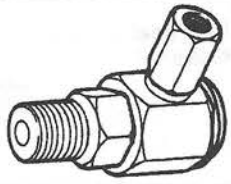 TUN01128X	49 0378 400B Oil pressure gauge set  T0378400B
49 B019 902 Oil pressure gauge (Part of 49 0378 400B)  TB019902X	49 B019 903 Hose (Part of 49 0378 400B) 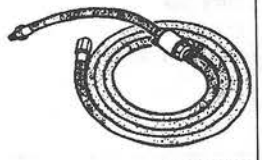 TB019903X	49 B019 901 Oil pressure guage  TB019901X
49 UN01 086 MLPS alignment tool (LA4A-EL) 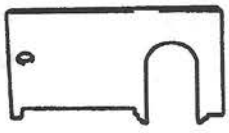 TUN01086X	49 UN01 071 Transaxle tester (LA4A-EL) 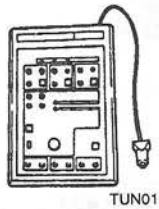 TUN01071X	49 UN01 089 Transaxle diagnostic harness (LA4A-EL)  TUN01089X
49 UN01 090 Transaxle overlay (LA4A-EL) 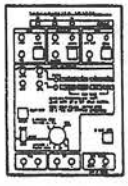 TUN01090X	49 UN01 091 MLPS harness adapter (LA4A-EL) 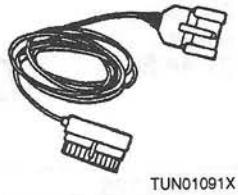 TUN01091X	49 UN01 092 MLPS overlay (LA4A-EL) 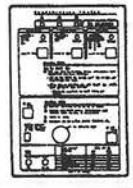 TUN01092X
49 G017 5A0 Engine support  TG0175A0X	49 G017 503 Hook (Part of 49 G017 5A0)  TG017503X	49 G017 501 Bar (Part of 49 G017 5A0)  TG017501X
49 G017 502 Support (Part of 49 G017 5A0) 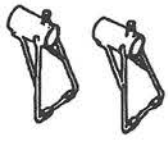 TG017502X	49 T028 3A0 Ball joint puller 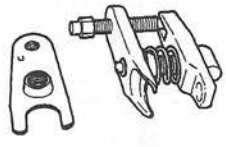 TT0283A0X	49 T028 303 Body (Part of 49 T028 3A0)  TT028303X

49 T028 304 Attachment (Part of 49 T028 3A0)  TT028304X	49 UN01 104 Servo cover remover/ replacer (LA4A-EL) 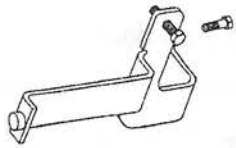 TUN01104X	49 UN01 105 Servo piston rod selector (LA4A-EL) 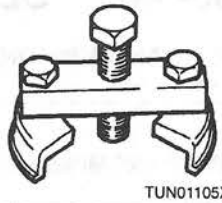 TUN01105X
49 UN01 085 Shifter shaft alignment tool (LA4A-EL) 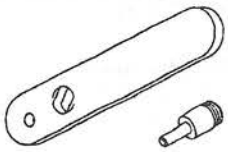 TUN01085X	49 UN01 087 Converter seal remover (LA4A-EL) 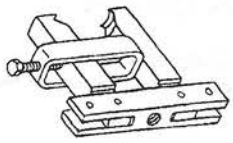 TUN01087X	49 0223 630B Axle shaft puller (LA4A-EL)  T0223630B
49 UN11 101 Threaded adapter (LA4A-EL) 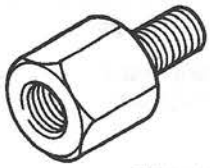 TUN11101X	49 E011 1A0 Ring gear brake set 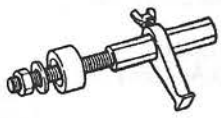 TE0111A0X	49 E011 103 Shaft (Part of 49 E011 1A0)  TE011103X
49 E011 104 Collar (Part of 49 E011 1A0)  TE011104X	49 E011 105 Stopper (Part of 49 E011 1A0)  TE011105X	49 UN01 100 Oil pump removal bolts 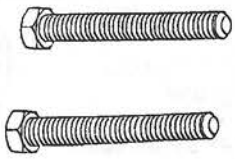 TUN01100X
49 8501 631A Adapter (LA4A-EL) 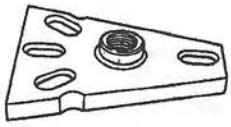 T8501631A	49 T088 0A0 NGS set  TT0880A0X	49 T088 010E Program Card (V4.0)  TT088010E
49 G019 031 Wrench (GF4A-EL) 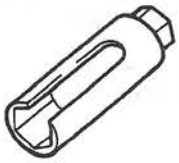 TG019031X	49 G030 455 Diff. side gear holder (GF4A-EL) 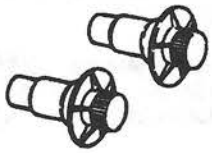 TG030455X	49 G030 795 Oil seal installer (GF4A-EL)  TG030795X
49 G030 797 Handle (Part of 49 G030 795) (GF4A-EL)  TG030797X	49 G030 796 Body (Part of 49 G030 795) (GF4A-EL)  TG030796X	49 F028 202 Bush installer 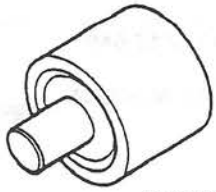 TF028202X

STEERING

06
SECTION

GENERAL PROCEDURES 06–10
ENGINE SPEED SENSING POWER STEERING 06–12
TECHNICAL DATA 06–50
SERVICE TOOLS 06–60

06–10 GENERAL PROCEDURES

PRECAUTION (STEERING) 06–10–1

PRECAUTION (STEERING)

W6U610W01

Wheels and tires removal/installation

- The removal and installation procedures for the wheels and tires are not mentioned in this section. When a wheel is removed, tighten it to **89—117 N·m {9.0—12.0 kgf·m, 66—86 ft·lbf}**.

Power steering components removal/installation

- If any power steering fluid line has been disconnected anytime during the procedure, add ATF M-III or equivalent (e.g. Dexron®II), bleed the fluid lines, and inspect for leakage after the procedure has been completed.

Connectors disconnection/connection

- Disconnect the negative battery cable before doing any work that requires handling of connectors. Connect the negative battery cable only after the work is completed.

06–12 ENGINE SPEED SENSING POWER STEERING

AIR BLEEDING 06–12–1
POWER STEERING FLUID INSPECTION 06–12–1
Fluid Level Inspection 06–12–1
Fluid Leakage Inspection 06–12–1
Fluid Pressure Inspection 06–12–2
STEERING WHEEL AND COLUMN INSPECTION 06–12–3
Steering Wheel Play Inspection 06–12–3
Steering Wheel Looseness Inspection 06–12–3
Steering Wheel Effort Inspection 06–12–3
STEERING WHEEL AND COLUMN REMOVAL/INSTALLATION 06–12–4
Steering Wheel Removal Note 06–12–5
Intermediate Shaft, Steering Shaft Component Installation Note 06–12–5
Steering Wheel Installation Note 06–12–5
STEERING SHAFT COMPONENT DISASSEMBLY/ASSEMBLY 06–12–5
Steering Lock Mounting Bolts And Bracket Disassembly Note 06–12–5
Steering Lock Mounting Bolts And Bracket Assembly Note 06–12–6
STEERING SHAFT INSPECTION 06–12–6
STEERING LOCK (ATX MODEL) INSPECTION 06–12–6
STEERING GEAR AND LINKAGE REMOVAL/INSTALLATION 06–12–7
Tie-rod End Ball Joint Removal Note . 06–12–8
No.1 Engine Mount Component Removal Note 06–12–8
Steering Gear And Linkage Removal Note 06–12–8
Mounting Bracket Nut And Bolt Installation Note 06–12–8
Bolt (Intermediate Shaft) Installation Note 06–12–8
Pressure Pipe Installation Note 06–12–8
STEERING GEAR AND LINKAGE DISASSEMBLY/ASSEMBLY 06–12–9
Adjusting Cover Assembly Note 06–12–10
STEERING GEAR AND LINKAGE INSPECTION 06–12–10
Tie-rod End Inspection 06–12–10
Tie Rod Inspection 06–12–10
POWER STEERING OIL PUMP REMOVAL/INSTALLATION 06–12–11
Nut Removal/Installation Note 06–12–12
POWER STEERING OIL PUMP DISASSEMBLY/ASSEMBLY 06–12–13
Oil Pump Disassembly Note 06–12–15
Shaft And Bearing Disassembly Note . 06–12–15
Oil Seal Assembly Note 06–12–15
Shaft And Bearing Assembly Note ... 06–12–15
Blade Assembly Note 06–12–15
Cam Ring Assembly Note 06–12–15
Rear Pump Body Assembly Note 06–12–15

AIR BLEEDING

W6U612W01

1. Inspect the fluid level. (Refer to 06–12 POWER STEERING FLUID INSPECTION, Fluid Level Inspection.)
2. Jack up the front of the vehicle and support it on safety stands.
3. Turn the steering wheel fully to the left and right several times with the engine not running.
4. Inspect the fluid level again. If it has dropped, add fluid.
5. Repeat steps 2 and 3 until the fluid level stabilizes.
6. Lower the vehicle.
7. Start the engine and let it idle.
8. Turn the steering wheel fully to the left and right several times.
9. Verify that the fluid is not foamy and that the fluid level has not dropped.
10. Add fluid as necessary and repeat steps 7 and 8.

POWER STEERING FLUID INSPECTION

W6U612W02

Fluid Level Inspection

- Inspect the power steering fluid level. Add fluid to the specified level as necessary.

Fluid specification
ATF M-III or equivalent (e.g. Dexron®II)

Fluid Leakage Inspection

Caution
- **To prevent damage to the steering system, do not keep the steering wheel in the fully turned position for more than 5 seconds.**

1. Start the engine and let it idle. Turn the steering wheel fully to the left and right to apply fluid pressure.

Note
- The points where fluid leakage may occur are indicated in the figure.

2. Inspect for fluid leakage.

FS ENGINE

KL ENGINE

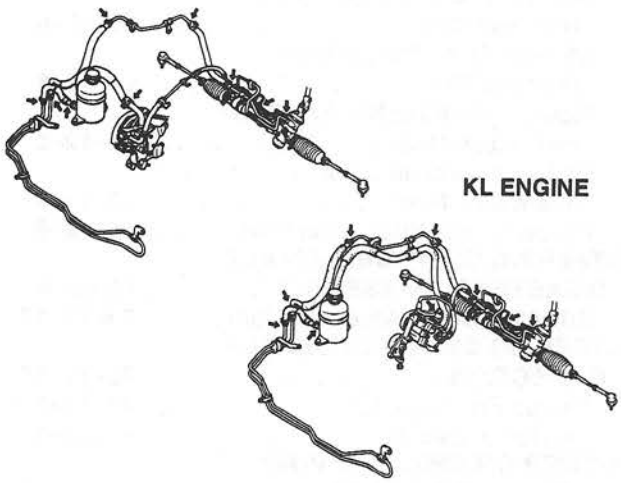

W6U612WA0

Fluid Pressure Inspection

1. Set the **SSTs** as shown in the figure.

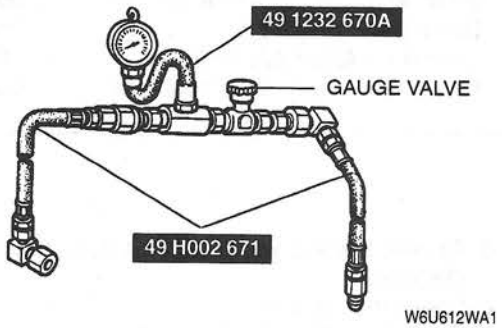

W6U612WA1

Tightening torque
40—49 N·m {4.0—5.0 kgf·m, 29—36 ft·lbf}

2. Disconnect the pressure pipe from the oil pump, and connect the **SSTs**.

FS ENGINE

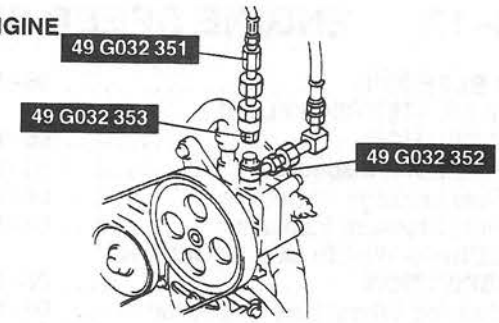

KL ENGINE

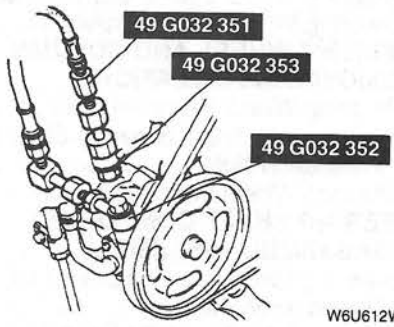

W6U612WA2

3. Bleed the air from the system.
4. Open the gauge valve fully. Start the engine and turn the steering wheel fully left and right to raise the fluid temperature to **50—60 °C {122—140 °F}**.

Caution
- **If the valve is left closed for more than 5 seconds, the fluid temperature will increase excessively and adversely affect the oil pump.**

5. Close the gauge valve completely. Increase the engine speed to **1,000—1,500 rpm** and measure the fluid pressure generated by the oil pump. If the pressure is not within the specification, repair or replace the oil pump component.

Oil pump fluid pressure
FS engine: 7.9—8.3 MPa
{80—85 kgf/cm^2, 1138—1208 psi}
KL engine: 8.4—8.8 MPa
{85—90 kgf/cm^2, 1209—1279 psi}

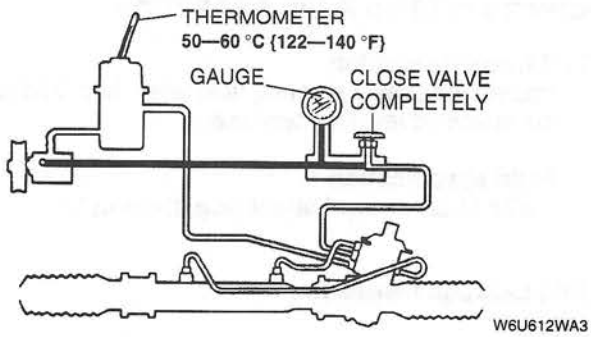

W6U612WA3

Caution
- **If the steering wheel is kept in the fully turned position for more than 5 seconds, the fluid temperature will rise excessively and adversely affect the oil pump.**

6. Open the gauge valve fully and increase the engine speed to **1,000—1,500 rpm**.
7. Turn the steering wheel fully to the left and right, then measure the fluid pressure generated at the gear housing. If the pressure is not within the specification, repair or replace the steering gear component.

Gear housing fluid pressure
FS engine: 7.9—8.3 MPa
{80—85 kgf/cm^2, 1138—1208 psi}
KL engine: 8.4—8.8 MPa
{85—90 kgf/cm^2, 1209—1279 psi}

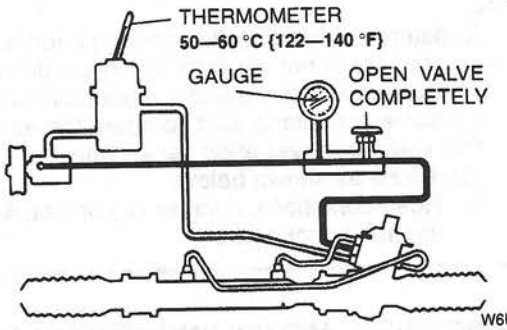

W6U612WA4

8. Remove the gauge set. Install and tighten the pressure pipe to the specified torque.

Tightening torque
24—29 N·m {2.4—3.0 kgf·m, 18—21 ft·lbf}

9. Bleed the air from the system. (Refer to 06–12 AIR BLEEDING.)

STEERING WHEEL AND COLUMN INSPECTION

W6U612W03

Steering Wheel Play Inspection

1. With the wheels in the straight-ahead position, gently turn the steering wheel to the left and right and verify that the play is within the specification.

Play
0—30 mm {0—1.18 in}

2. If the play exceeds the specification, either the steering joints are worn or the backlash of the steering gear is excessive. Correct as necessary.

Steering Wheel Looseness Inspection

- Move the steering wheel as shown in the figure to inspect for column bearing wear, steering shaft joint play, steering wheel looseness, and column looseness.

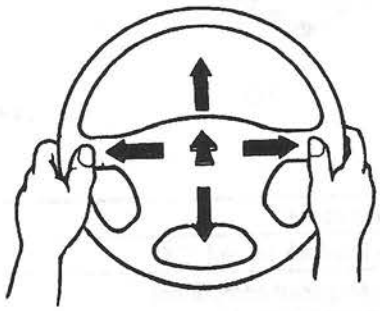
W6U612WA5

Steering Wheel Effort Inspection

1. Inspect the following points:
   (1) Tire size and tire pressure
   (2) Fluid level
   (3) Drive belt deflection
2. With the vehicle on a hard, level surface, put the wheels in the straight-ahead position.
3. Start the engine and warm the power steering fluid to **50—60 °C {122—140 °F}**.

Warning
- **Refer to 08–10 DRIVER-SIDE AIR BAG MODULE REMOVAL/INSTALLATION for removal/installation of the air bag module after inspection.**

4. Remove the air bag module.
5. Measure the steering wheel effort by using a torque wrench.

Steering wheel effort
7.8 N·m {80 kgf·cm, 69 in·lbf} max.

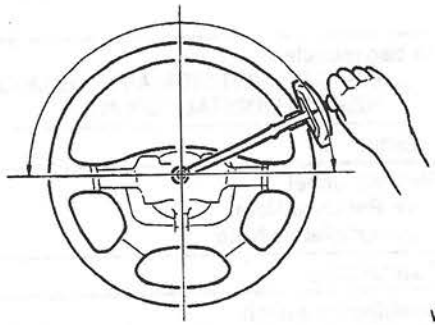
W6U612WA6

Note
- To determine whether the steering effort is satisfactory or not, perform the inspection on another vehicle of the same model and under the same conditions, and compare the results.
- The steering wheel effort varies with conditions as shown below.
  1. Road conditions, such as dry or wet, and asphalt or concrete.
  2. Tire conditions, such as brand, wear, and tire pressure.

6. If not within the specification, note the following:
   (1) Air in system
   (2) Fluid leakage at hose or connectors
   (3) Function of oil pump and steering gear

STEERING WHEEL AND COLUMN REMOVAL/INSTALLATION

W6U612W04

1. Remove in the order indicated in the table.
2. Install in the reverse order of removal.

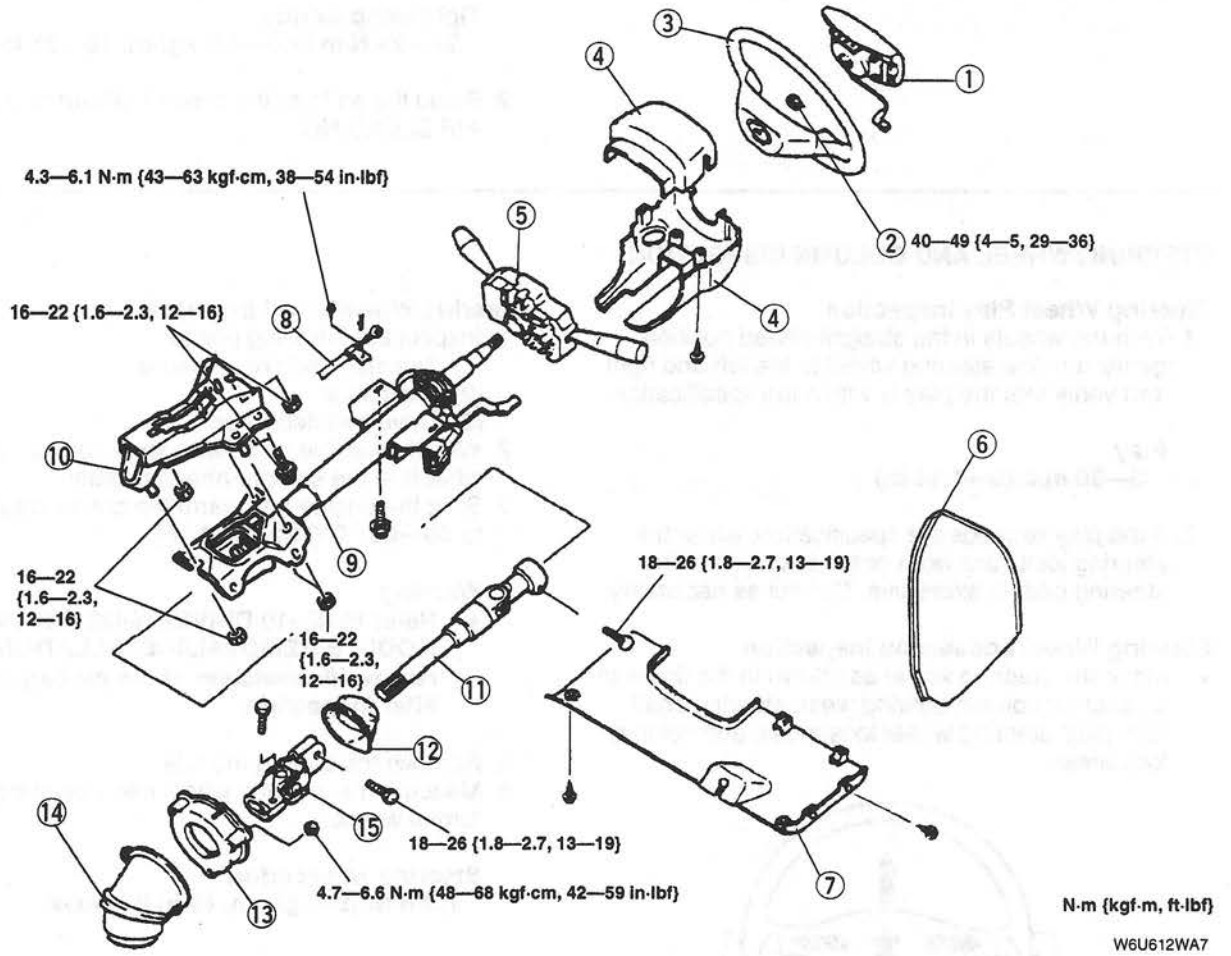

W6U612WA7

1	Air bag module ☞ 08–10 DRIVER-SIDE AIR BAG MODULE REMOVAL/INSTALLATION
2	Locknut
3	Steering wheel ☞ Removal Note ☞ Installation Note
4	Column cover
5	Combination switch
6	Side panel ☞ 09–17 SIDE PANEL REMOVAL/INSTALLATION

7	Lower panel
8	Key interlock cable (ATX)
9	Steering shaft component ☞ Installation Note
10	Bracket
11	Intermediate shaft ☞ Installation Note
12	Shaft seal
13	Set plate
14	Dust cover
15	Universal joint

Steering Wheel Removal Note

Caution
- **Do not try to remove the steering wheel by hitting the shaft with a hammer. The column will collapse.**

1. Set the vehicle in the straight-ahead position.
2. Remove the steering wheel by using a suitable puller.

Intermediate Shaft, Steering Shaft Component Installation Note

Caution
- **Do not apply the shock in the axial direction of the shaft.**

Note
- If the tilt lever does not move easily, loosen the D nuts, tap the lower bracket at the point shown and retighten.

1. Tighten bolt A after tightening bolt B.
2. Tighten bolt C with the steering shaft at its upper most tilt position.
3. After installation, lightly tap the lower bracket at the point shown by using a hammer to verify correct installation.

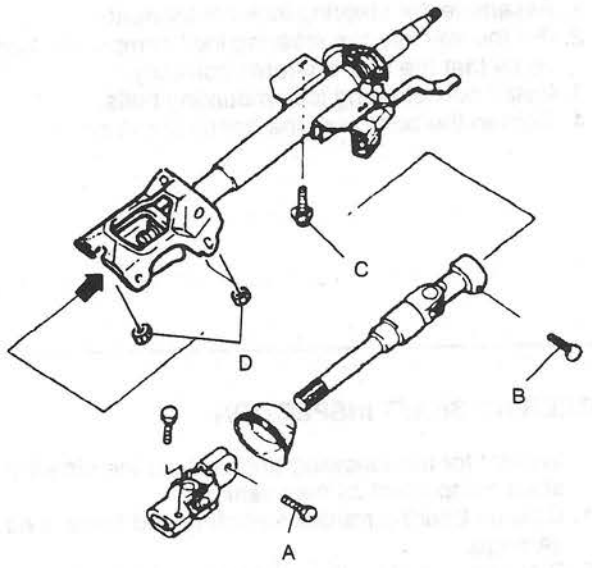

W6U612WA8

Steering Wheel Installation Note
- Set the wheels in the straight-ahead position, and install the steering wheel.

STEERING SHAFT COMPONENT DISASSEMBLY/ASSEMBLY

W6U612W05

1. Disassemble in the order indicated in the table.
2. Assemble in the reverse order of removal.

1	Steering lock mounting bolts and bracket ☞ Disassembly Note ☞ Assembly Note
2	Steering lock component
3	Steering shaft component

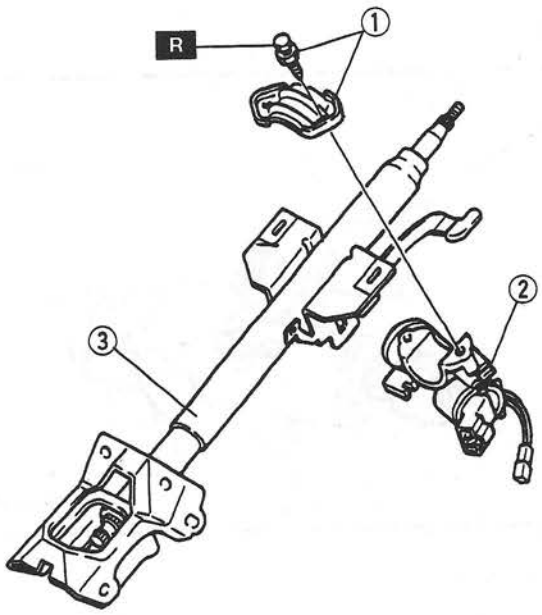

W6U612WA9

Steering Lock Mounting Bolts And Bracket Disassembly Note

1. Make a groove in the heads of the steering lock mounting bolts by using a chisel and a hammer.
2. Remove the bolts by using a screwdriver.
3. Disassemble the steering lock component.

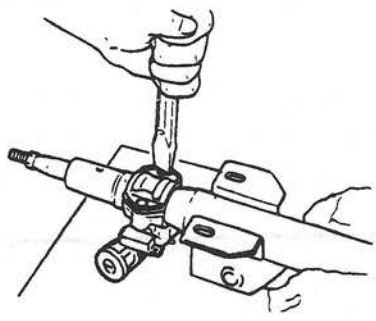

W6U612WAA

Steering Lock Mounting Bolts And Bracket Assembly Note

1. Assemble the steering lock component.
2. Put the key into the steering lock component and verify that the lock operates correctly.
3. Install new steering lock mounting bolts.
4. Tighten the bolts until the heads break off.

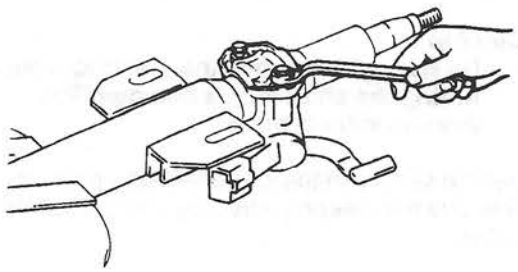

W6U612WAB

STEERING SHAFT INSPECTION

W6U612W06

- Inspect for the following and replace the steering shaft component as necessary.

1. Column bearing rotates smoothly and there is no damage.
2. Steering shaft length is within the specification.

Length
516.4 mm {20.33 in}

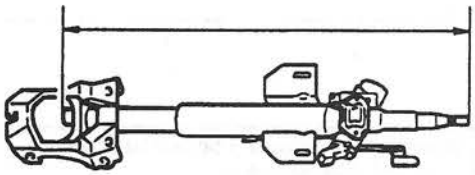

W6U612WAC

3. Tilt operation
   (1) Verify that the adjusting lever moves smoothly from unlock position to lock position.
   (2) Verify that the steering shaft is fixed firmly when the adjusting lever is locked.

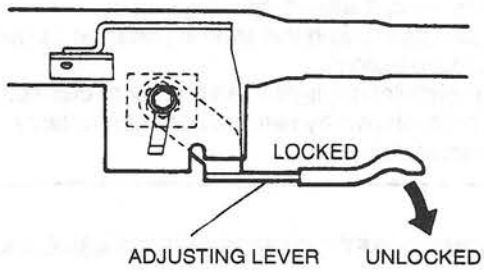

W6U612WAD

STEERING LOCK (ATX MODEL) INSPECTION

W6U612W07

- Verify that the cable connector does not move when the key is in the LOCK position and that it moves freely with the key in other positions.

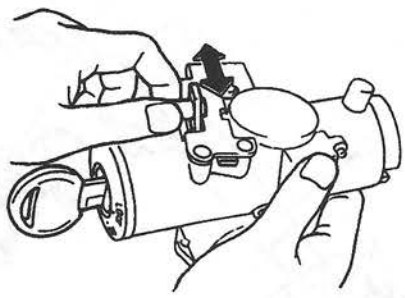

W6U612WAE

STEERING GEAR AND LINKAGE REMOVAL/INSTALLATION

W6U612W08

1. Remove in the order indicated in the table.
2. Install in the reverse order of removal.
3. After installation, inspect the toe-in. (Refer to 02–11 PREINSPECTION, FRONT WHEEL ALIGNMENT.)

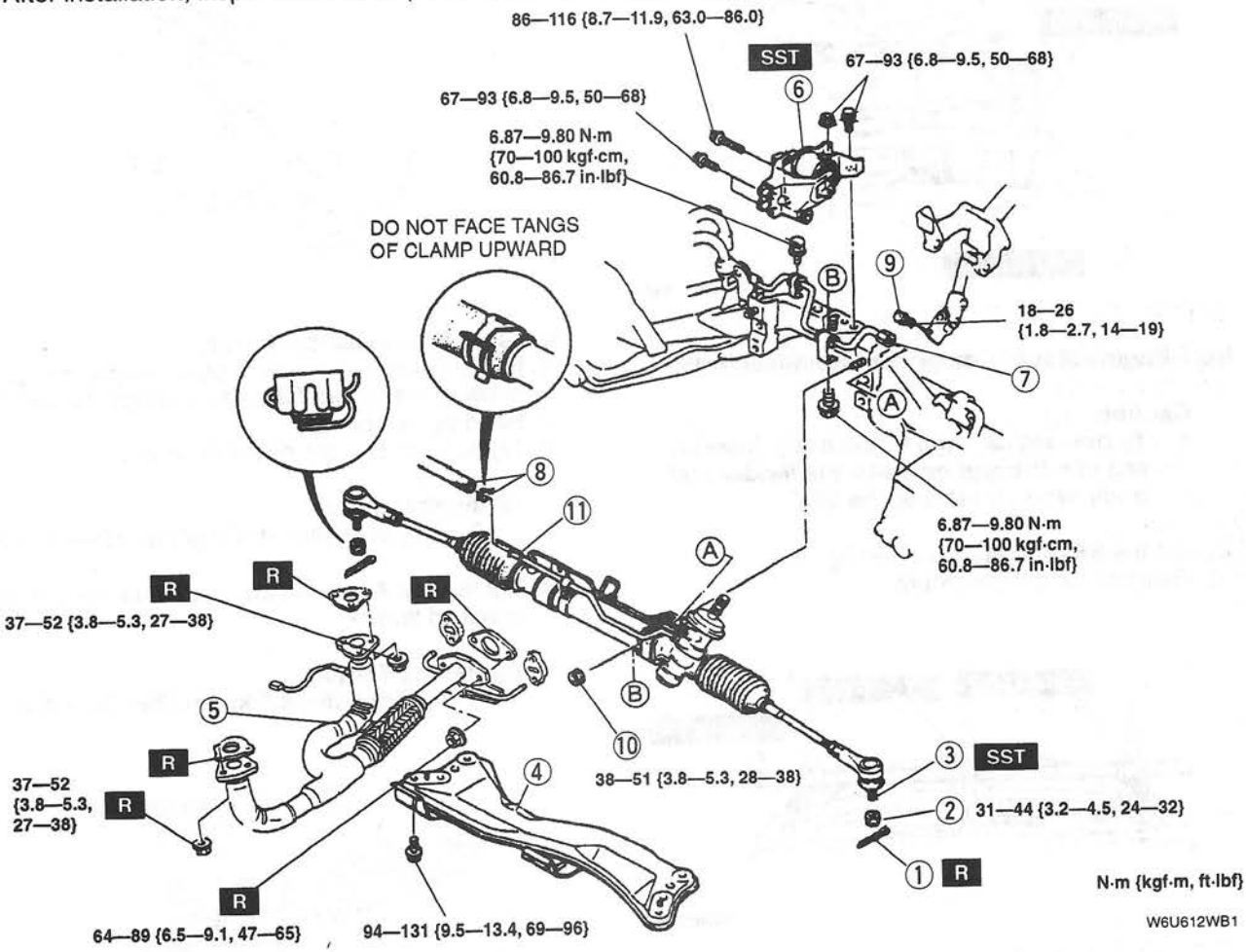

1	Cotter pin
2	Nut
3	Tie-rod end ball joint ☞ Removal Note
4	Transverse member
5	Front exhaust pipe and catalytic converter (KL engine)
6	No.1 engine mount component ☞ Removal Note

7	Pressure pipe ☞ Installation Note
8	Return hose and clamp
9	Bolt (intermediate shaft) ☞ Installation Note
10	Mounting bracket nut and bolt ☞ Installation Note
11	Steering gear and linkage ☞ Removal Note

Tie-rod End Ball Joint Removal Note

1. Remove the tie rod nut.
2. Separate the tie-rod end from the steering knuckle by using the **SSTs**.

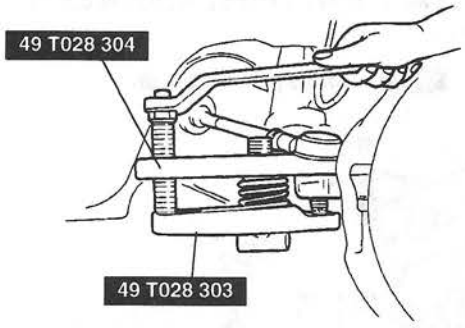

W6U612WAF

No.1 Engine Mount Component Removal Note

Caution

- **To prevent damage to the body, insert a rag into the gap between the fender and body, when installing the SST.**

1. Set the **SSTs** as shown in the figure.
2. Remove the engine mount.

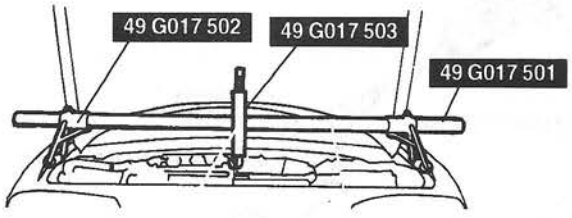

W6U612WAG

Steering Gear And Linkage Removal Note

- Remove the steering gear and linkage by pulling it from the right side.

Mounting Bracket Nut And Bolt Installation Note

1. Loosely tighten nuts 4 and 3.
2. Tighten the mounting bracket nuts and bolts to the specified torque in the order shown.

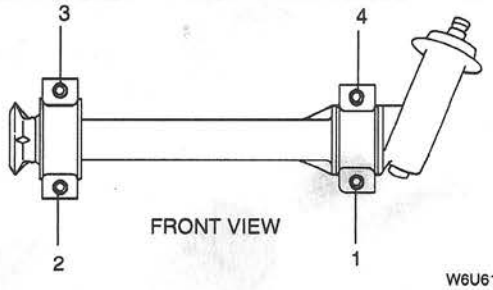

W6U612WAH

Bolt (Intermediate Shaft) Installation Note

- Align the marks and install the intermediate shaft and bolt.

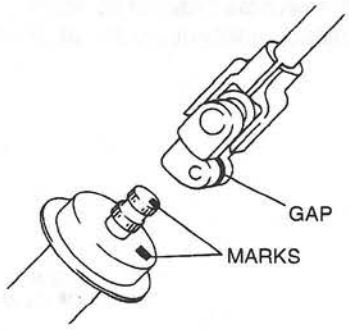

W6U612WAJ

Pressure Pipe Installation Note

1. Hand-tighten the pressure pipe fitting to the gear housing, being careful not to damage the O-ring.
2. Hand-tighten bolt A.
3. Tighten bolt B to the specified torque.

Tightening torque
7.9—10.7 N·m {80—110 kgf·cm, 70—95 in·lbf}

4. Tighten bolt A and the pressure pipe fitting to the specified torque.

Tightening Torque
35—44 N·m {3.5—4.5 kgf·m, 26—32 ft·lbf}

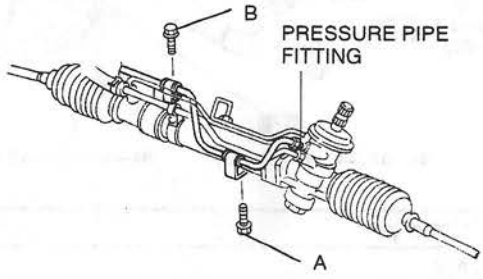

W6U612WAK

STEERING GEAR AND LINKAGE DISASSEMBLY/ASSEMBLY

W6U612W09

1. Disassemble in the order indicated in the table.
2. Assemble in the reverse order of removal.

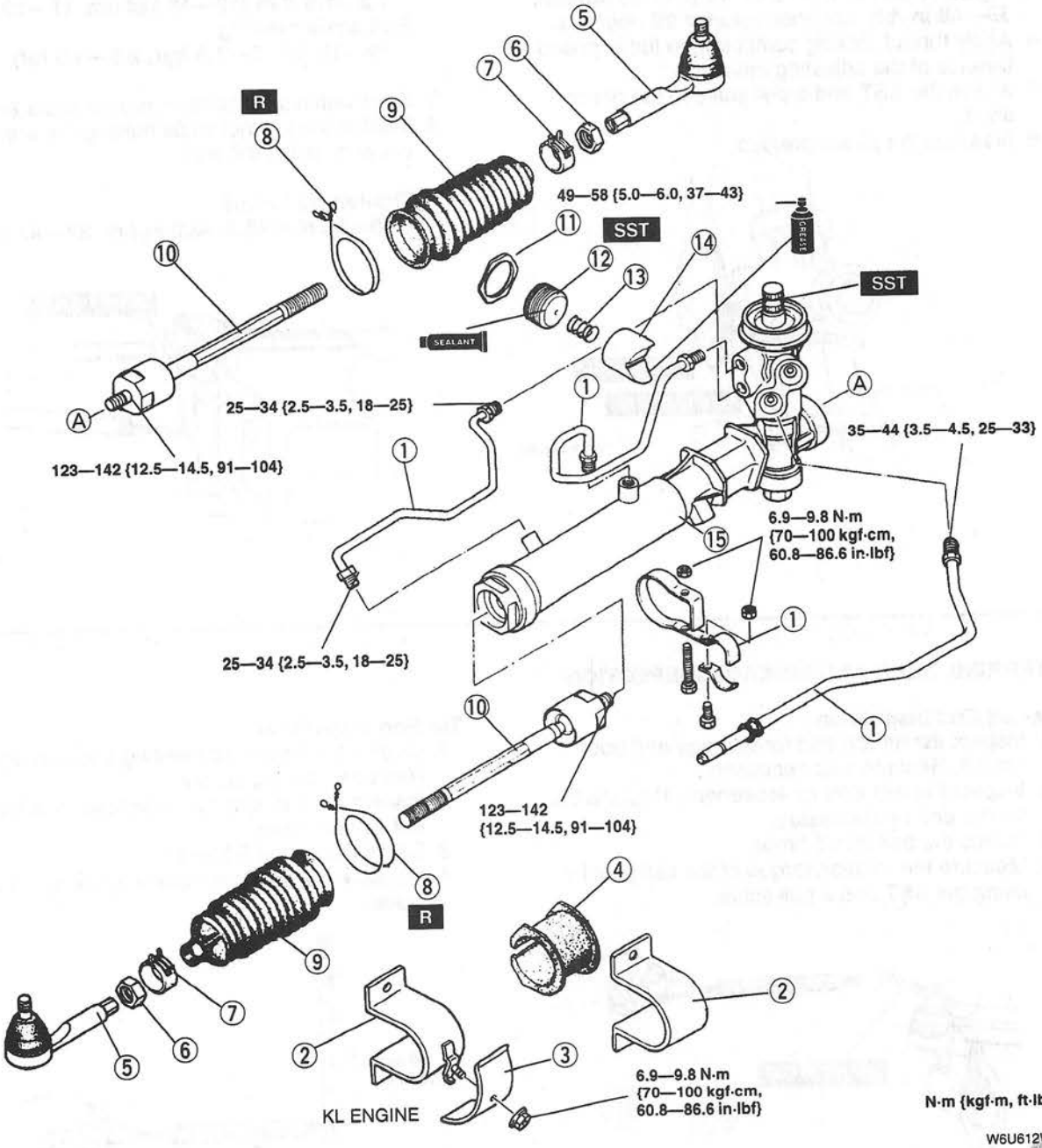

W6U612WAL

1	Oil pipe and pipe clip
2	Mounting bracket
3	Heat insulator (KL engine)
4	Mounting rubber
5	Tie-rod end
6	Locknut (tie-rod end)
7	Clamp
8	Boot wire

9	Boot
10	Tie rod
11	Locknut (adjusting cover)
12	Adjusting cover ☞ Assembly Note
13	Spring
14	Pressure pad
15	Steering gear component

Adjusting Cover Assembly Note

1. Set the rack in the center position.
2. Tighten the adjusting cover to **9.8 N·m {100 kgf·cm, 87 in·lbf}**, then loose it.
3. Tighten again to **4.4—5.4 N·m {45—55 kgf·cm, 39—48 in·lbf}**, and then return it **20 degrees**.
4. Apply thread-locking compound to the exposed threads of the adjusting cover.
5. Attach the **SST** and a pull scale to the pinion shaft.
6. Measure the pinion preload.

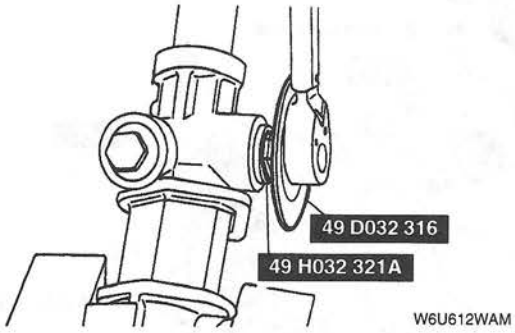

W6U612WAM

Rack position
Center ±90°
Pinion preload
1.2—1.5 N·m {12—16 kgf·cm, 11—13 in·lbf}
Pull scale reading
12—15 N {1.2—1.6 kgf, 2.8—3.3 lbf}

7. If not within specification, repeat steps 2—6.
8. Tighten the locknut while holding the adjusting cover by using the **SST**.

Tightening torque
49—58 N·m {5.0—6.0 kgf·m, 37—43 ft·lbf}

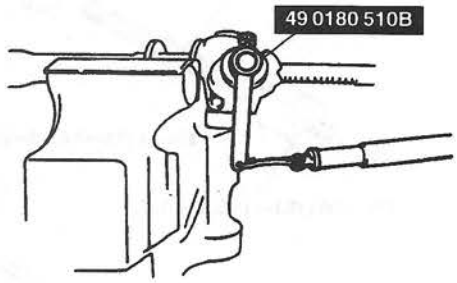

W6U612WAN

STEERING GEAR AND LINKAGE INSPECTION

W6U612W12

Tie-rod End Inspection

1. Inspect the tie-rod end for damage and boot cracks. Replace it as necessary.
2. Inspect the ball joint for looseness. Replace the tie-rod end as necessary.
3. Rotate the ball joint 5 times.
4. Measure the rotation torque of the ball joint by using the **SST** and a pull scale.



W6U612WAP

Rotation torque
0.3—2.9 N·m {3—30 kgf·cm, 2.6—26 in·lbf}
Pull scale reading
3—29 N {0.3—3 kgf, 0.7—6.6 lbf}

5. If not within specification, replace the tie-rod end.

Tie Rod Inspection

1. Inspect the tie rod for bending and damage. Replace it as necessary.
2. Inspect the ball joint for looseness. Replace the tie rod as necessary.
3. Swing the tie rod 5 times.
4. Measure the swinging torque by using a pull scale.

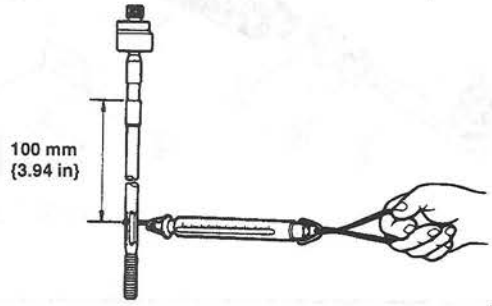

W6U612WAQ

Swinging torque
0.1—3.4 N·m {1—35 kgf·cm, 0.9—30 in·lbf}
Pull scale reading
0.7—21 N {0.07—2.2 kgf, 0.16—4.8 lbf}

5. If not within specification, replace the tie rod.

POWER STEERING OIL PUMP REMOVAL/INSTALLATION

W6U612W10

1. Remove the transverse member (KL engine).
2. Remove in the order indicated in the table.
3. Install in the reverse order of removal.
4. Adjust the drive belt. (Refer to 01–10A DRIVE BELT ADJUSTMENT [FS].) (Refer to 01–10B DRIVE BELT ADJUSTMENT [KL].)

FS ENGINE

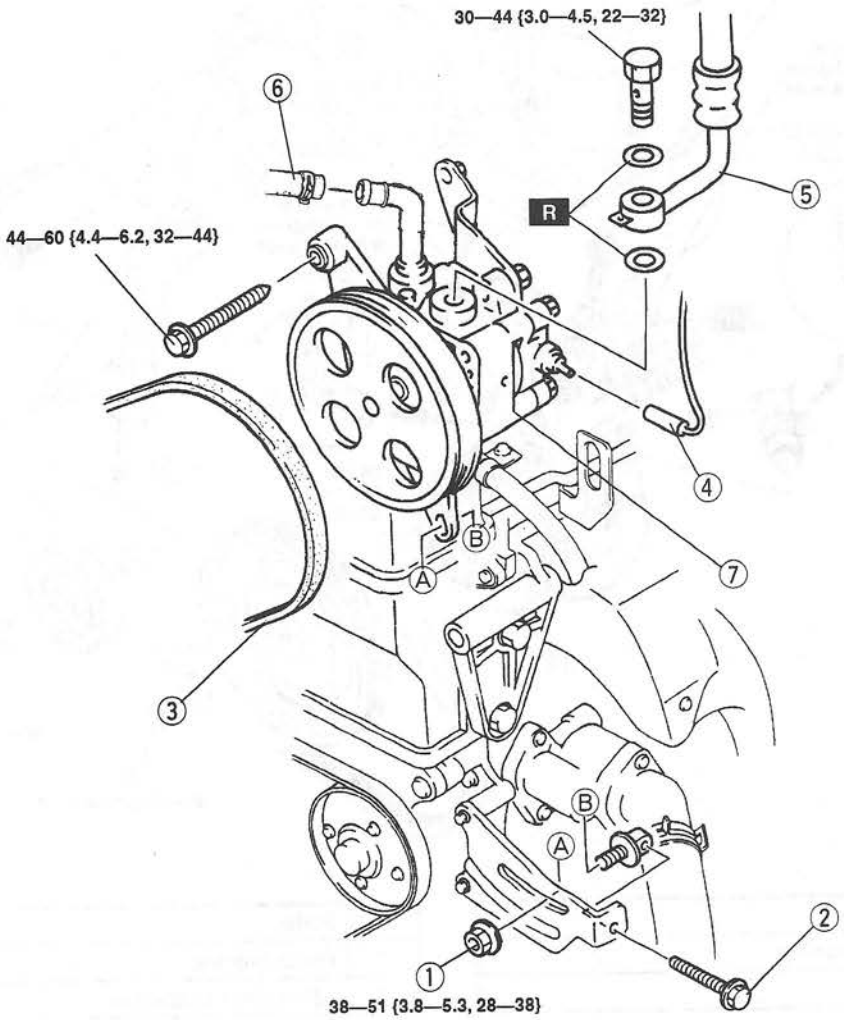

N·m {kgf·m, ft·lbf}

W6U612WAS

1	Flange nut
2	Adjusting bolt
3	Drive belt
4	Pressure switch connector

5	Pressure pipe
6	Return hose
7	Power steering oil pump and bracket

KL ENGINE

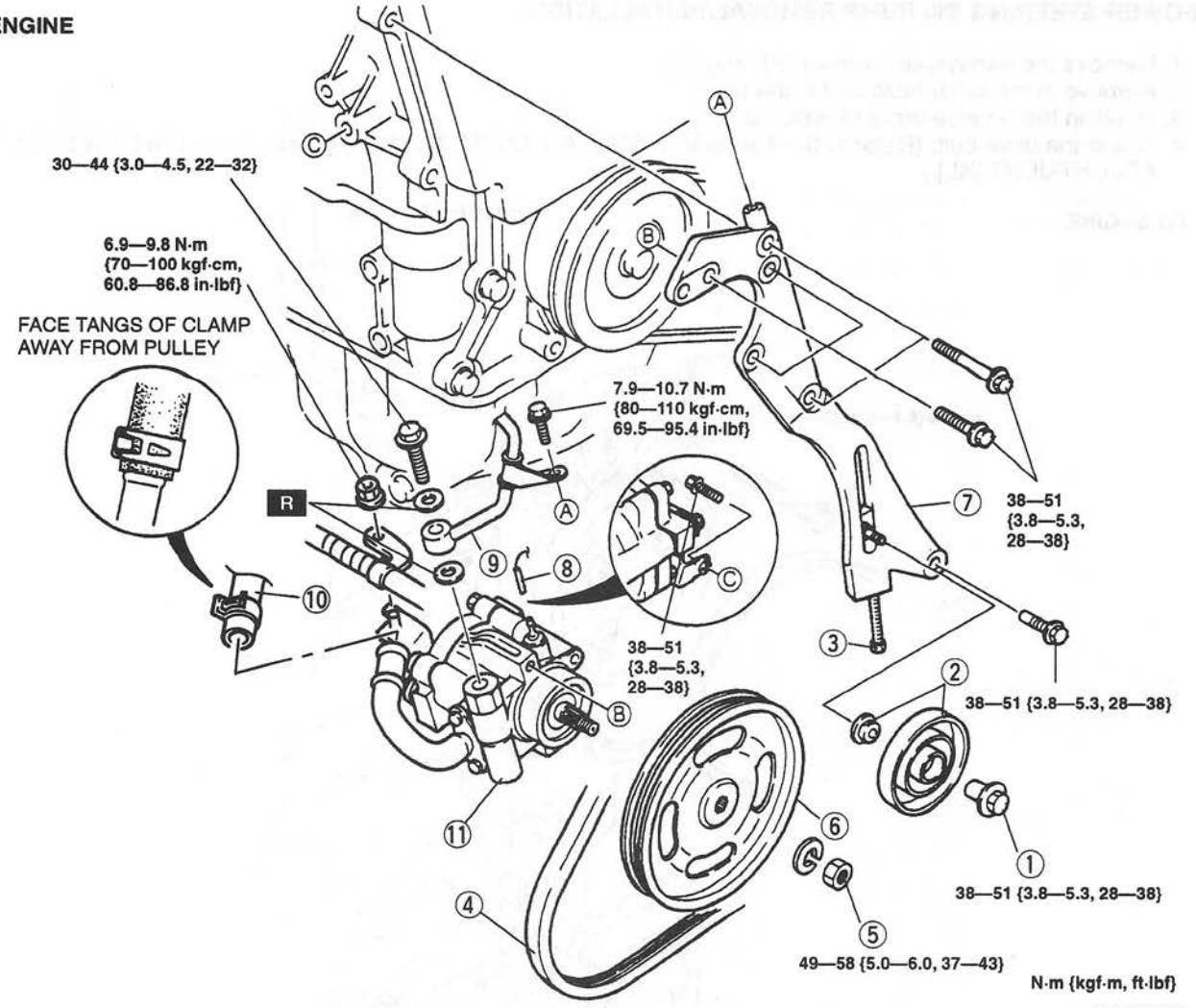

1	Locknut
2	Idler pulley and bearing
3	Adjusting bolt
4	Drive belt
5	Nut ☞ Removal/Installation Note

6	Pulley
7	Pump bracket
8	PSP switch connector
9	Pressure pipe
10	Return hose
11	Power steering oil pump

Nut Removal/Installation Note

- Insert a screwdriver through a hole of the pulley, and while holding the pulley, loosen or tighten the nut.

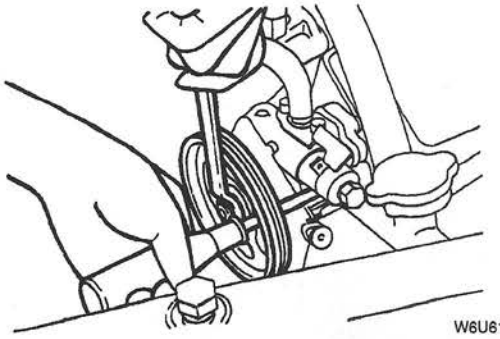

POWER STEERING OIL PUMP DISASSEMBLY/ASSEMBLY

W6U612W11

Note
- The following procedure is for replacement of the O-rings, the shaft, and the front pump body only. Replace the oil pump component as other repairs are necessary.

1. Disassemble in the order indicated in the table.
2. Assemble in the reverse order of disassembly.

FS ENGINE

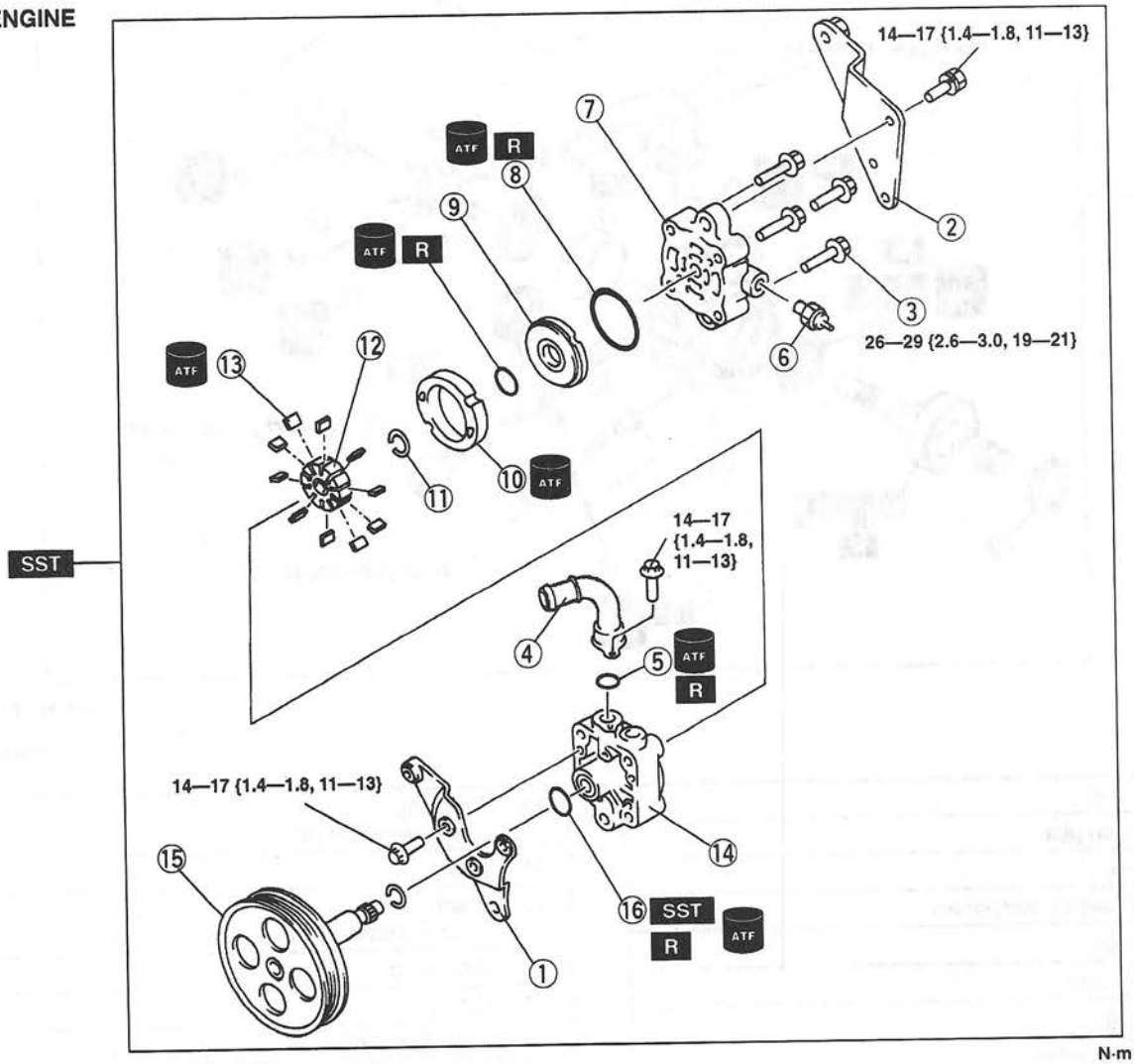

N·m {kgf·m, ft·lbf}

W6U612WB2

1	Front bracket
2	Rear bracket
3	Bolt
4	Suction pipe
5	O-ring
6	PSP switch component
7	Rear pump body ☞ Assembly Note
8	O-ring
9	Side plate

10	Cam ring ☞ Assembly Note
11	Backup ring
12	Rotor
13	Blade ☞ Assembly Note
14	Front pump body
15	Shaft component
16	Oil seal ☞ Assembly Note

KL ENGINE

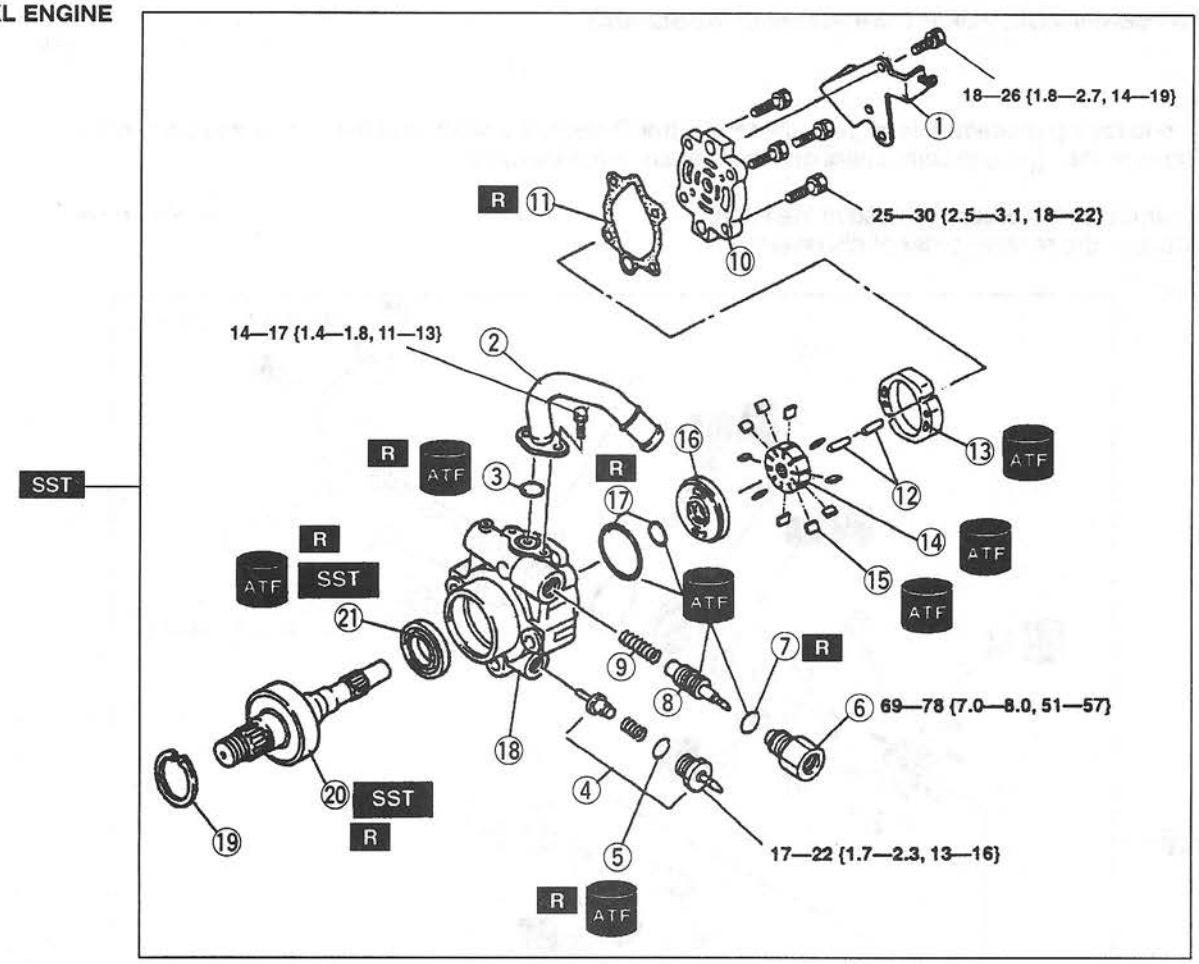

N·m {kgf·m, ft·lbf}

W6U612WAU

1	Bracket
2	Suction pipe
3	O-ring
4	PSP switch component
5	O-ring
6	Connector
7	O-ring
8	Control valve
9	Spring
10	Rear Pump body ☞ Assembly Note
11	Gasket
12	Pin

13	Cam ring ☞ Assembly Note
14	Rotor
15	Blade ☞ Assembly Note
16	Side plate
17	O-ring
18	Front Pump body
19	Snap ring
20	Shaft and bearing ☞ Disassembly Note ☞ Assembly Note
21	Oil seal ☞ Assembly Note

Oil Pump Disassembly Note
- Install the pump to the **SST** and hold the pump and **SST** in a vise.

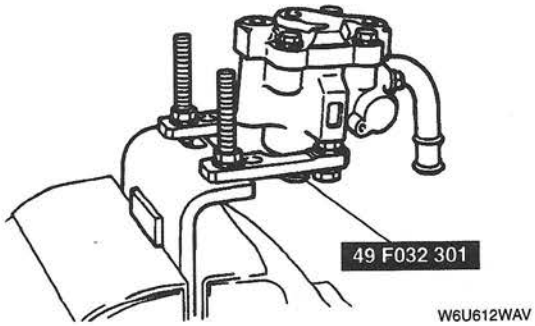

W6U612WAV

Shaft And Bearing Disassembly Note
- Disassemble the shaft and bearing by using a press.

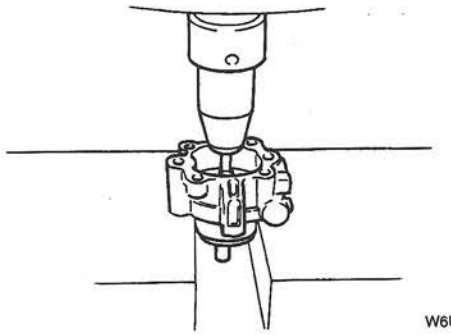
W6U612WAW

Oil Seal Assembly Note
- Tap the oil seal into the front pump body by using the **SST**.

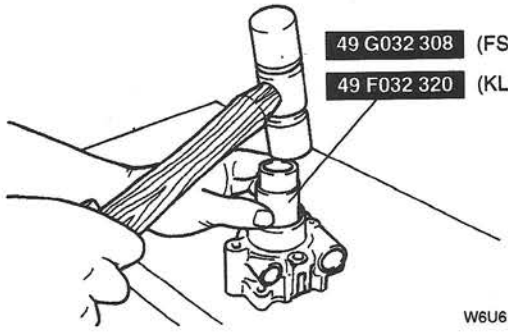

W6U612WAX

Shaft And Bearing Assembly Note
- Press the shaft and bearing into the front pump body by using the **SST**.

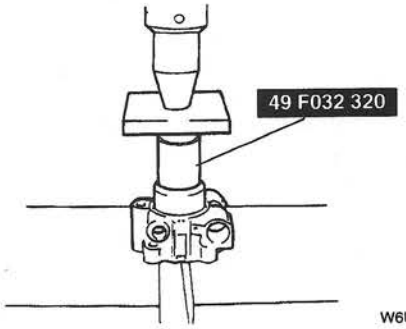

W6U612WAY

Blade Assembly Note
- Place the blades in the rotor with the rounded edges contacting the cam.

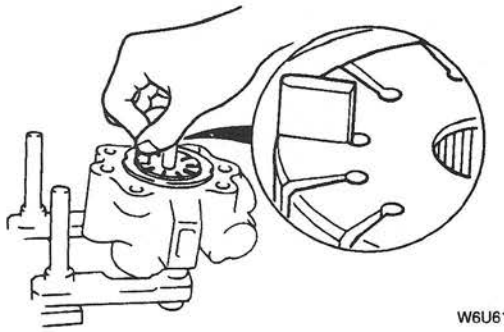
W6U612WAZ

Cam Ring Assembly Note
- Install the cam ring in the front pump body with the mark facing upward.

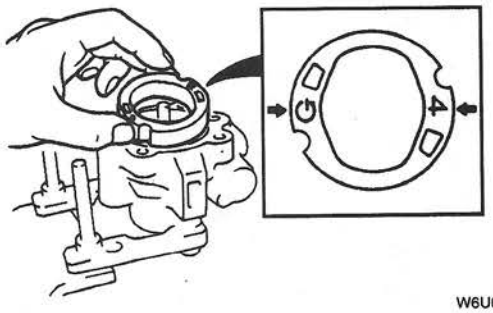
W6U612WB0

Rear Pump Body Assembly Note
- After installing the rear pump body, manually turn the shaft to verify that it rotates smoothly.

06–50 TECHNICAL DATA

06 STEERING 06–50–1

06 STEERING

W6U650W01

Item		Specification
ENGINE SPEED SENSING POWER STEERING		
STEERING WHEEL		
Steering wheel play (mm {in})		0—30 {0—1.2}
Steering wheel effort (N·m {kgf·cm, in·lbf})		7.8 {80, 69} max.
STEERING SHAFT AND JOINT		
Shaft length (mm {in})		516.4 {20.33}
POWER STEERING SYSTEM		
Power steering fluid	Type	ATF M-III or equivalent (e.g. Dexron®II)
	Capacity (L {US qt, Imp qt})	0.95 {1.00, 0.84} (FS, MTX), 1.15 {1.22, 1.01} (FS, ATX) 1.35 {1.43, 1.19} (KL)

06–60 SERVICE TOOLS

06 STEERING SST 06–60–1

06 STEERING SST

W6U660W01

49 T028 3A0 Ball joint puller set 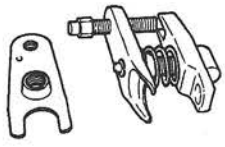 TT0283A0X	49 T028 303 Body (Part of 49 T028 3A0) 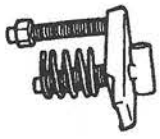 TT028303X	49 T028 304 Attachment (Part of 49 T028 3A0)  TT028304X
49 1232 670A Power steering gauge set  T1232670A	49 1232 672 Gauge (Part of 49 1232 670A)  T1232672X	49 1232 673 Valve body (Part of 49 1232 670A) 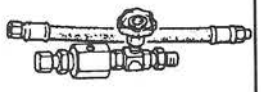 T1232673X
49 H002 671 Power steering gauge adapter  TH002671X	49 0180 510B Preload attachment 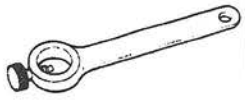 T0180510B	49 G032 3A4 Adapter set  TG0323A4X
49 G032 351 Adapter (Part of 49 G032 3A4) 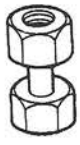 TG032351X	49 G032 352 Adapter (Part of 49 G032 3A4)  TG032352X	49 G032 353 Bolt (Part of 49 G032 3A4)  TG032353X
49 D032 316 Protractor 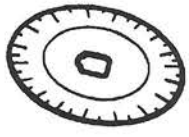 TD032316X	49 H032 321A Hexagon wrench  TH032321A	49 F032 301 Power steering pump hanger 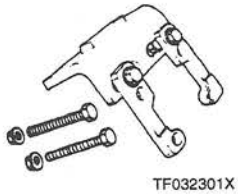 TF032301X
49 G017 5A0 Engine support  TG0175A0X	—	—

HVAC

07
SECTION

TROUBLESHOOTING 07–01
REFRIGERANT SYSTEM 07–10
BASIC SYSTEM 07–11
CONTROL SYSTEM 07–40
TECHNICAL DATA 07–50

07–01 TROUBLESHOOTING

FOREWORD 07–01–1
TROUBLESHOOTING INDEX 07–01–1
SYMPTOM TROUBLESHOOTING 07–01–2

FOREWORD

W6U701W01

- Refer to 00–00 GENERAL INFORMATION and thoroughly read and understand the basic flow of troubleshooting to properly perform the procedures.

TROUBLESHOOTING INDEX

W6U701W02

- For the steps which have an asterisk (*), inspect the connection of the connector with the terminal and for any damage. If the connection is poor, reconnect them, or repair or replace the appropriate parts if necessary.
- Troubleshooting hint lists inspection part (step) according to malfunction. Use it to immediately confirm the inspection method.

No.	SYMPTOM
1	Air conditioning system will not work at all.
2	Illumination light and indicator light of each switch do not illuminate properly.
3	Air outlet temperature does not change.
4	No cool air.
5	Insufficient A/C cooling.
6	Air does not blow out at all. Airflow volume does not change when operating fan switch.
7	Air does not blow out on specific airflow mode.
8	Air intake mode does not change.
9	Airflow mode does not change when operating airflow mode switch.

SYMPTOM TROUBLESHOOTING

W6U701W03

1	**Air conditioning system will not work at all.**		
TROUBLESHOOTING HINTS Malfunction in heater control unit power supply circuit • Fuse malfunction • Malfunction in wiring harness between A/C 10 A fuse and heater control unit Malfunction in heater control unit ground circuit • Heater control unit malfunction • Malfunction in wiring harness between heater control unit and ground			
STEP	**INSPECTION**		**ACTION**
1	Check A/C 10 A fuse. Is it okay?	Yes	Go to next step.
		No	Replace fuse, then go to step 4. If fuse burns out right away, go to next step.
2*	Turn ignition switch to ON. Measure voltage at terminal 2L (IG2 signal) of heater control unit 10-pin connector. Is voltage **approximately 12 V**? 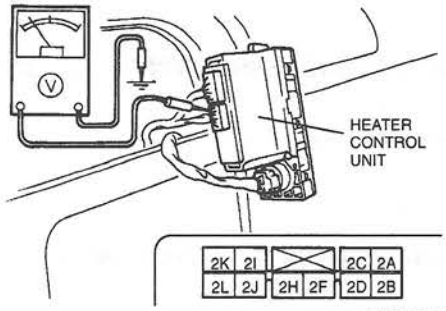 W6U701WA0	Yes	Go to next step.
		No	Repair wiring harness between A/C 10 A fuse and heater control unit, then go to step 4.
3*	Measure voltage at terminal 2J (GND signal) of heater control unit 10-pin connector. Is voltage **0 V**? 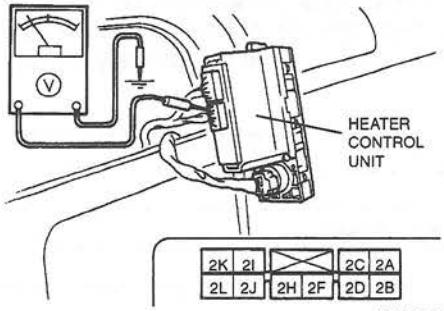 W6U701WA1	Yes	Replace heater control unit, then go to next step.
		No	Repair wiring harness between heater control unit and ground, then go to next step.
4	Does A/C system operate correctly?	Yes	Troubleshooting completed. Explain repairs to customer.
		No	Reconfirm malfunction symptoms, then repeat from step 1 if malfunction reoccurs.

2	**Illumination light and indicator light of each switch do not illuminate properly.**		
TROUBLESHOOTING HINTS Malfunction in A/C switch indicator light circuit • Step 1, 2 Malfunction in other indicator lights (except A/C switch indicator light) circuit • Heater control unit malfunction			
STEP	**INSPECTION**		**ACTION**
1	Turn ignition switch to ON. Turn both A/C switch and fan switch on. Does A/C switch indicator light illuminate?	Yes	Go to next step.
		No	Go to troubleshooting symptom No.4.

STEP	INSPECTION		ACTION
2	Start engine. Verify air conditioning system works. Does A/C system work?	Yes	Go to next step.
		No	Go to troubleshooting symptom No.1.
3	Do other indicator lights (except A/C switch indicator light) illuminate?	Yes	Operation is normal. (Reconfirm malfunction symptoms.)
		No	Replace heater control unit, then go to next step.
4	Is heater control unit indication incorrect?	Yes	Troubleshooting completed. Explain repairs to customer.
		No	Reconfirm malfunction symptoms, then repeat from step 1 if malfunction reoccurs.

3 Air outlet temperature does not change.

TROUBLESHOOTING HINTS

Misunderstanding by customer
- Step 1

Malfunction in air mix actuator's +5 V signal circuit
- Air mix actuator malfunction
- Heater control unit malfunction
- Malfunction in wiring harness between heater control unit and air mix actuator

Malfunction in air mix actuator's potentiometer input signal circuit
- Malfunction in wiring harness between heater control unit and air mix actuator

Malfunction in air mix actuator's actuator control signal circuit
- Malfunction in wiring harness between heater control unit and air mix actuator

Malfunction in air mix actuator's motor drive signal circuit
- Malfunction in wiring harness between heater control unit and air mix actuator

Malfunction in heater unit's air mix link circuit
- Step 14, 15

Malfunction in air mix actuator circuit
- Air mix actuator malfunction

Malfunction in heater unit's air mix door circuit
- Heater control unit malfunction
- Air mix door malfunction

STEP	INSPECTION		ACTION
1	Does engine start-up at normal operating temperature?	Yes	Go to next step.
		No	Warm engine for **approximately 10 minutes**, then go to step 19.
2	Is air mix actuator fixed to MAX HOT or MAX COLD?	Yes	Go to next step.
		No	Go to step 10.
3	Is air mix actuator fixed to MAX HOT?	Yes	Go to next step.
		No	Go to step 8. (It fixes to MAX COLD.)
4*	Turn ignition switch to ON. Measure voltage at terminal G (+5 V signal) of air mix actuator connector. Is voltage **approximately 5 V**? 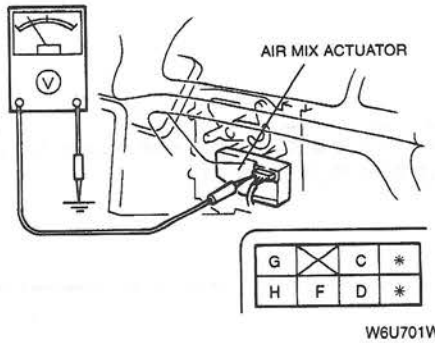 W6U701WA2	Yes	Go to step 7.
		No	Go to next step.

07

STEP	INSPECTION		ACTION
5	Disconnect air mix actuator connector. Measure voltage at terminal G (+5 V signal) of air mix actuator connector of wiring harness. Is voltage **approximately 5 V**? 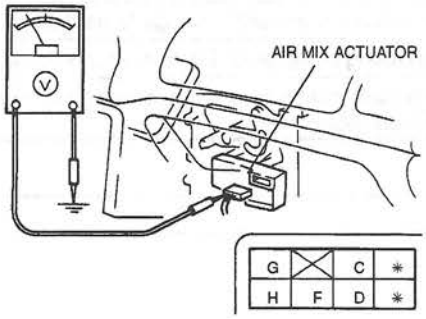 W6U701WA3	Yes	Inspect air mix actuator, then go to step 19.
		No	Go to next step.
6*	Turn ignition switch to LOCK. Disconnect heater control unit 10-pin connector. Check if there is no continuity between the following terminals and ground. • Terminal 2A (10-pin, heater control unit)–terminal G (air mix actuator) Is there no continuity? 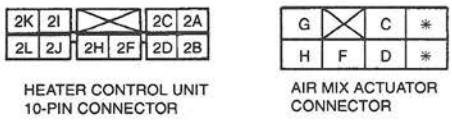 W6U701WA4	Yes	Replace heater control unit, then go to step 19.
		No	Repair wiring harness between heater control unit and air mix actuator, then go to step 19.
7*	Disconnect heater control unit 10-pin connector and air mix actuator connector. Check if there is no continuity between the following terminals and ground. • Terminal 2D (10-pin, heater control unit)–terminal F (air mix actuator) Is there no continuity? 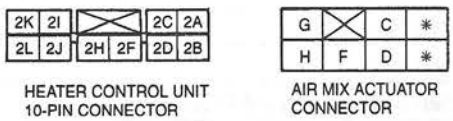 W6U701WA5	Yes	Go to step 14.
		No	Repair wiring harness between heater control unit and air mix actuator, then go to step 19.
8*	Turn ignition switch to LOCK. Disconnect heater control unit 10-pin connector and air mix actuator connector. Check if there is no continuity between the following terminals and +B circuit. • Terminal 2D (10-pin, heater control unit)–terminal F (air mix actuator) Is there no continuity? 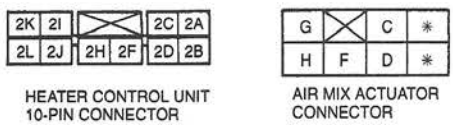 W6U701WA6	Yes	Go to next step.
		No	Repair wiring harness between heater control unit and air mix actuator, then go to step 19.

STEP	INSPECTION		ACTION
9*	Check if there is continuity between the following terminals. • Terminal 2B (10-pin, heater control unit)–terminal C (air mix actuator) Is there continuity? 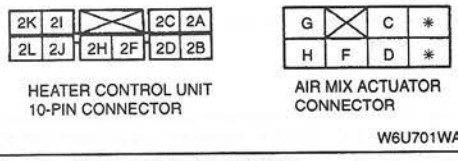 HEATER CONTROL UNIT 10-PIN CONNECTOR AIR MIX ACTUATOR CONNECTOR W6U701WA7	Yes	Go to step 14.
		No	Repair wiring harness between heater control unit and air mix actuator, then go to step 19.
10*	Turn ignition switch to LOCK. Disconnect heater control unit 10-pin connector and air mix actuator connector. Check if there is continuity between the following terminals. • Terminal 2A (10-pin, heater control unit)–terminal G (air mix actuator) Is there continuity? 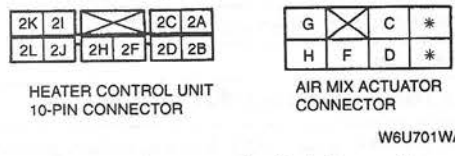 HEATER CONTROL UNIT 10-PIN CONNECTOR AIR MIX ACTUATOR CONNECTOR W6U701WA8 Check if there is no continuity between the above terminals and +B circuit. Is there no continuity?	Yes	Go to next step.
		No	Repair wiring harness between heater control unit and air mix actuator, then go to step 19.
11*	Check if there is continuity between the following terminals. • Terminal 2D (10-pin, heater control unit)–terminal F (air mix actuator) Is there continuity? 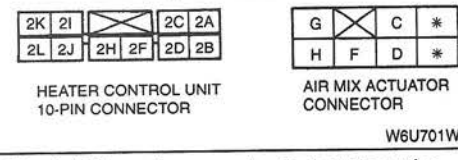 HEATER CONTROL UNIT 10-PIN CONNECTOR AIR MIX ACTUATOR CONNECTOR W6U701WA9	Yes	Go to next step.
		No	Repair wiring harness between heater control unit and air mix actuator, then go to step 19.
12*	Check if there is no continuity between the following terminals and +B circuit. • Terminal 2B (10-pin, heater control unit)–terminal C (air mix actuator) Is there no continuity? 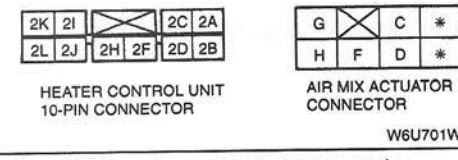 HEATER CONTROL UNIT 10-PIN CONNECTOR AIR MIX ACTUATOR CONNECTOR W6U701WAA	Yes	Go to next step.
		No	Repair wiring harness between heater control unit and air mix actuator, then go to step 19.
13	Check if there is continuity between the following terminals. • Terminal 2C (10-pin, heater control unit)–terminal H (air mix actuator) • Terminal 2F (10-pin, heater control unit)–terminal D (air mix actuator) Are there continuity? 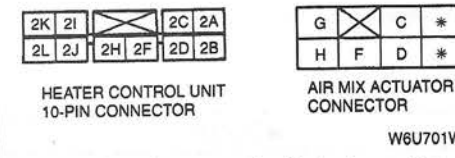 HEATER CONTROL UNIT 10-PIN CONNECTOR AIR MIX ACTUATOR CONNECTOR W6U701WAB Check if there is no continuity between the above terminals and ground. Are there no continuity?	Yes	Go to next step.
		No	Repair wiring harness between heater control unit and air mix actuator, then go to step 19.

07

STEP	INSPECTION		ACTION
14	Inspect heater unit's air mix links, air mix cranks, and air mix rod. • Is there grease on links and cranks? • Are links, cranks, and rod securely and properly installed? Are above items okay?	Yes	Go to next step.
		No	Apply grease or properly and securely install links, cranks, and rod, then go to step 19.
15	Remove air mix actuator. Turn ignition switch to ON. Set fan switch at fourth position. Inspect heater unit. • Does groove of links on heater unit have no dust on it? • Does temperature of discharged air change smoothly when air mix link is operated by hand?	Yes	Go to next step.
		No	If any links have dust on it, remove dust, then go to step 19. If temperature of discharged air does not change smoothly, then go to step 17.
16	Inspect air mix actuator. ☞ 07–40 AIR MIX ACTUATOR INSPECTION Is it okay?	Yes	Go to next step.
		No	Replace air mix actuator, then go to step 17.
17	Is there foreign material or obstruction in heater unit's air mix doors?	Yes	Remove obstruction, then go to step 7.
		No	Go to next step.
18	Inspect heater unit's air mix doors. • Are doors free of cracks and damage? • Are doors securely and properly installed? Are above items okay?	Yes	Replace heater control unit, then go to next step.
		No	Replace any doors, or install doors in proper position, then go to next step.
19	Does temperature of discharged air change when temperature control dial is operated?	Yes	Troubleshooting completed. Explain repairs to customer.
		No	Reconfirm malfunction symptoms, then repeat from step 1 if malfunction reoccurs.

4	**No cool air.**

TROUBLESHOOTING HINTS

Malfunction in A/C switch indicator light circuit
- Heater control unit malfunction
- Malfunction in wiring harness between heater control unit and fan switch

Malfunction in drive belt circuit
- Drive belt malfunction

Malfunction in A/C signal (between heater control unit, refrigerant pressure switch, and PCM) circuit
- Refrigerant pressure switch (LO) malfunction
- Refrigerant pressure switch (HI) malfunction
- PCM malfunction
- Malfunction in wiring harness between refrigerant pressure switch (LO) and heater control unit
- Malfunction in wiring harness between PCM and refrigerant pressure switch (HI)
- Malfunction in wiring harness between refrigerant pressure switch (HI) and refrigerant pressure switch (LO)

Malfunction in A/C relay (IG2 signal) circuit
- WIPER 20 A fuse malfunction
- A/C relay malfunction
- Malfunction in wiring harness between WIPER 20 A fuse and A/C relay

Malfunction in PCM (IG2 signal) circuit
- Malfunction in wiring harness between A/C relay and PCM

Malfunction in A/C cut control circuit of PCM
- PCM malfunction
- Input signal parts malfunction

Malfunction in A/C relay (A/C control signal) circuit
- COOLING FAN 40 A fuse malfunction
- A/C relay malfunction
- Malfunction in wiring harness between COOLING FAN 40 A fuse and A/C relay

Malfunction in A/C compressor (A/C control signal) circuit
- Magnetic clutch malfunction
- Malfunction in wiring harness between A/C relay and magnetic clutch

STEP	INSPECTION		ACTION
1	Is air discharged?	Yes	Go to next step.
		No	Go to symptom troubleshooting No. 6, 7.

STEP	INSPECTION		ACTION
2	Start engine. Turn both A/C switch and fan switch on. Does A/C compressor operate?	Yes	Go to next step if A/C switch indicator light does not illuminate. If indicator light works, go to symptom troubleshooting No. 5.
		No	Go to next step.
3	Does A/C switch indicator light illuminate?	Yes	Go to step 5.
		No	Go to next step.
4*	Turn fan switch to off. Measure voltage at terminal 1E (A/C signal) of heater control unit 14-pin connector. Is voltage okay? 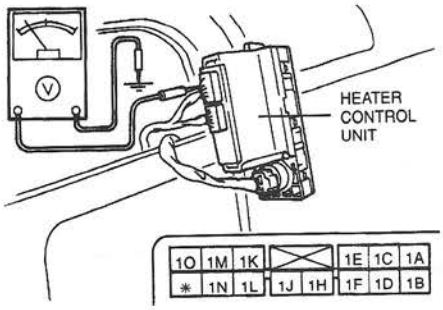 W6U701WAC	Yes	Replace heater control unit, then go to step 25.
		No	Repair wiring harness between heater control unit and fan switch, then go to step 25.
5	Perform refrigerant system performance test. ☞ 07–10 REFRIGERANT SYSTEM PERFORMANCE TEST Is operation normal?	Yes	Reconfirm malfunction symptoms.
		No	Go to next step.
6	Inspect drive belt. ☞ 01–10 DRIVE BELT INSPECTION Is it okay?	Yes	Verify cooling fan and condenser fan operation. If fans are inoperative, inspect fan relays, condenser fan and/or cooling fan, and related harnesses. If operation is okay, go to next step.
		No	Adjust or replace drive belt, then go to step 25. ☞ 01–10 DRIVE BELT ADJUSTMENT
7*	Disconnect heater control unit 14-pin connector. Start engine. Turn both A/C switch and fan switch on. Measure voltage at terminal 1F (A/C signal) of heater control unit 14-pin connector of wiring harness. Is voltage okay? 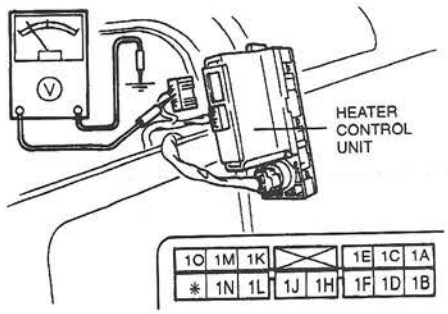 W6U701WAD	Yes	Connect heater control unit connector, then go to step 15.
		No	Go to next step.

07

STEP	INSPECTION		ACTION
8*	Disconnect refrigerant pressure switch (LO) connector. Start engine. Turn both A/C switch and fan switch on. Measure voltage at terminal A (A/C signal) of refrigerant pressure switch (LO) connector of wiring harness. Is voltage **approximately 12 V**? 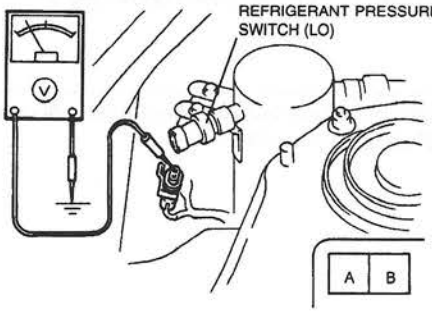 W6U701WAE	Yes	Go to next step.
		No	Go to step 11.
9*	Check if there is continuity between the following terminals. • Terminal B (refrigerant pressure switch (LO))–terminal 1F (14-pin, heater control unit) Is there continuity? 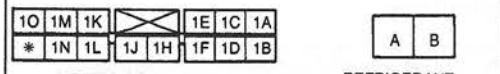 HEATER CONTROL UNIT 14-PIN CONNECTOR REFRIGERANT PRESSURE SWITCH (LO) CONNECTOR W6U701WAF	Yes	Go to next step.
		No	Repair wiring harness between refrigerant pressure switch (LO) and heater control unit, then go to step 25.
10	Connect heater control unit 14-pin connector. When terminals A and B of refrigerant pressure switch (LO) connector at wiring harness are shorted, is cool air discharged? 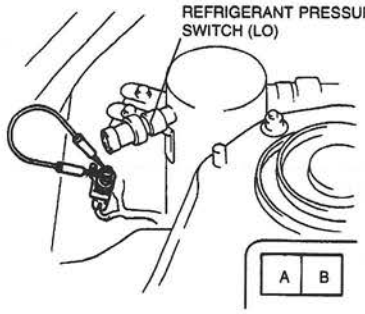 W6U701WAG	Yes	Replace refrigerant pressure switch (LO), then go to step 25.
		No	Reconfirm malfunction symptoms.

STEP	INSPECTION		ACTION
11*	Disconnect refrigerant pressure switch (HI) connector. Start engine. Turn both A/C switch and fan switch on. Measure voltage at terminal A (A/C signal) of refrigerant pressure switch (HI) connector of wiring harness. Is voltage **approximately 12 V**? 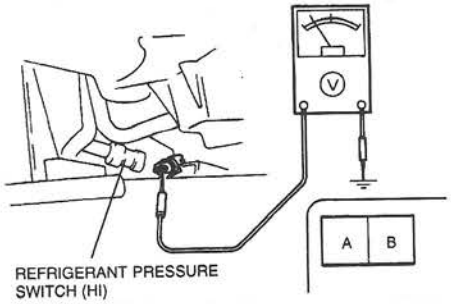 W6U701WAH	Yes	Go to step 13.
		No	Go to next step.
12*	Measure voltage at test pin 41 (A/C signal) of PCM. ☞ 01–40A PCM INSPECTION ☞ 01–40B PCM INSPECTION Is voltage **approximately 12 V**?	Yes	Repair wiring harness between PCM and refrigerant pressure switch (HI), then go to step 25.
		No	PCM inspection completed. Go to step 25.
13*	Check if there is continuity between the following terminals. • Terminal B (refrigerant pressure switch (HI))–terminal A (refrigerant pressure switch (LO)) Is there continuity?  W6U701WAK	Yes	Go to next step.
		No	Repair wiring harness between refrigerant pressure switch (HI) and (LO), then go to step 25.
14	Connect heater control unit 14-pin connector and refrigerant pressure switch (LO) connector. When terminals A and B of refrigerant pressure switch connector (HI) at wiring harness are shorted, is cool air discharged? 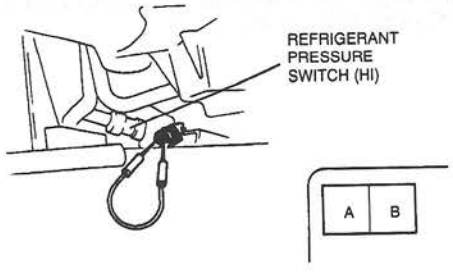 W6U701WAL	Yes	Replace refrigerant pressure switch (HI), then go to step 25.
		No	Reconfirm malfunction symptoms.
15	When A/C switch is operated OFF to ON, is operation sound heard from A/C relay?	Yes	Go to step 21.
		No	Go to next step.
16	Is WIPER 20 A fuse okay?	Yes	Go to next step.
		No	Replace WIPER 20 A fuse, then go to step 25. If fuse burns out right away, go to next step.

STEP	INSPECTION		ACTION
17*	Remove A/C relay. Turn ignition switch to ON. Turn A/C switch off. Measure voltage at terminal A (IG2 signal) of A/C relay on main fuse block side. Is voltage **approximately 12 V**? 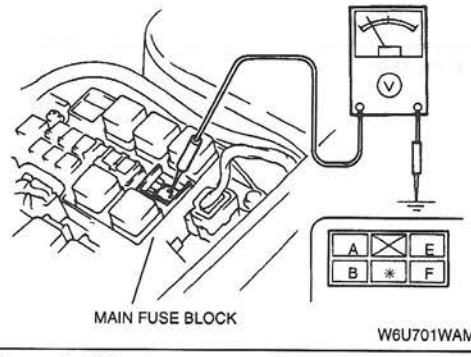 MAIN FUSE BLOCK W6U701WAM	Yes	Go to next step.
		No	Repair wiring harness between WIPER 20 A fuse and A/C relay, then go to step 25.
18	Inspect A/C relay. ☞ 07–40 A/C RELAY INSPECTION Is it okay?	Yes	Install A/C relay, then go to next step.
		No	Replace A/C relay, then go to step 25.
19*	Turn A/C switch off. Measure voltage at test pin 69 (IG2 signal) of PCM. ☞ 07–40A PCM INSPECTION ☞ 07–40B PCM INSPECTION Is voltage **approximately 12 V**?	Yes	Go to next step.
		No	Repair wiring harness between A/C relay and PCM, then go to step 25.
20*	Inspect input signal parts (power steering pressure switch, engine coolant temperature sensor, crankshaft position sensor, throttle position sensor, A/C switch and refrigerant pressure switches. excluding wiring harness) of PCM (A/C cut control). Are they okay?	Yes	Replace PCM, then go to step 25.
		No	Replace input signal parts, then go to step 25.
21	Is COOLING FAN 40 A fuse okay?	Yes	Go to next step.
		No	Replace COOLING FAN 40 A fuse, then go to step 25. If fuse burns out right away, go to next step.
22*	Remove A/C relay. Measure voltage at terminal B (A/C control signal) of A/C relay on main fuse block side. Is voltage **approximately 12 V**? 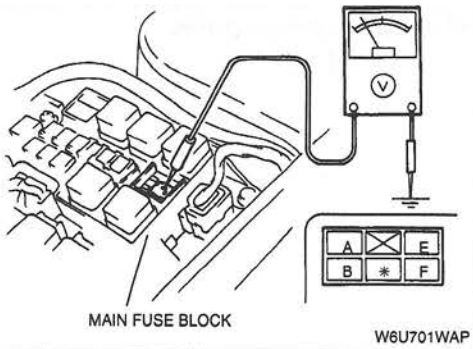 MAIN FUSE BLOCK W6U701WAP	Yes	Go to next step.
		No	Repair wiring harness between COOLING FAN 40 A fuse and A/C relay, then go to step 25.
23	Inspect A/C relay. ☞ 07–40 A/C RELAY INSPECTION Is it okay?	Yes	Install A/C relay, then go to next step.
		No	Replace A/C relay, then go to step 25.

STEP	INSPECTION		ACTION
24*	Turn ignition switch to ON. Turn A/C switch off. Measure voltage at terminal A (A/C control signal) of magnetic clutch connector. Is voltage **approximately 12 V**? 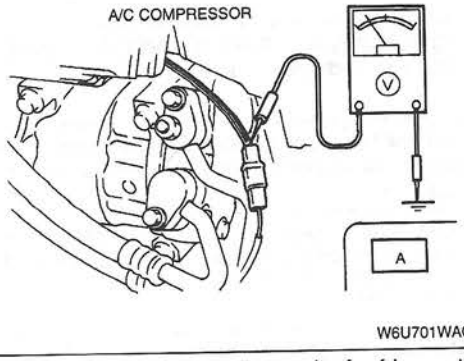 	Yes	Inspect magnetic clutch, then go to next step. ☞ 07–40 MAGNETIC CLUTCH INSPECTION
		No	Repair wiring harness between A/C relay and magnetic clutch, go to next step.
25	Is cool air discharged? (Is result of refrigerant system performance test correct?)	Yes	Troubleshooting completed. Explain repairs to customer.
		No	Reconfirm malfunction symptoms, then repeat from step 1 if malfunction reoccurs.

5 Insufficient A/C cooling.

TROUBLESHOOTING HINTS
Malfunction in defective drive belt circuit
- Drive belt malfunction

Malfunction in heater unit's air mix link circuit
- Air mix link, air mix crank, and air mix rod malfunction

Malfunction in blower unit or condenser circuit
- Condenser malfunction

Malfunction in refrigerant lines circuit
- Refrigerant lines malfunction

Malfunction in accumulator tank circuit
- Accumulator tank malfunction

Malfunction in A/C compressor circuit, insufficient compressor oil
- A/C compressor malfunction

STEP	INSPECTION		ACTION
1	Perform refrigerant system performance test. ☞ 07–10 REFRIGERANT SYSTEM PERFORMANCE TEST Is operation okay?	Yes	Operation is normal. (Reconfirm malfunction symptoms.)
		No	Go to next step.
2	Inspect drive belt. ☞ 01–10 DRIVE BELT INSPECTION Is it okay?	Yes	Go to next step.
		No	Adjust or replace drive belt, then go to step 14. ☞ 01–10 DRIVE BELT ADJUSTMENT
3	Inspect refrigerant pressure. ☞ 07–10 REFRIGERANT PRESSURE CHECK Are both the high-pressure side and low-pressure side values high?	Yes	Go to next step.
		No	Go to step 7.
4	Are heater unit's air mix link, air mix crank, and air mix rod properly and securely installed in the correct position?	Yes	Go to next step.
		No	Repair or securely and properly install link, crank, and rod, then go to step 14.
5	Is inlet of blower unit clogged?	Yes	Remove obstruction, then go to step 14. (Within the cooling unit, if air does not reach evaporator, heat exchange does not occur and refrigerant pressure becomes high. Therefore, removal of obstruction is necessary.)
		No	Go to next step.
6	Inspect condenser. ☞ 07–11 CONDENSER INSPECTION Is it okay?	Yes	Adjust refrigerant to specified amount, then go to step 14. (Excessive amount of refrigerant.)
		No	Replace condenser, or repair and clean condenser fins, then go to step 14.

STEP	INSPECTION		ACTION
7	Are the refrigerant pressure's high-pressure side and low-pressure side values low?	Yes	Go to next step.
		No	Go to step 11.
8	Inspect refrigerant lines. • Is piping free of damage and cracks? • Are piping connections free of oil grime? (visual inspection) • Are piping connections free of gas leakage? Are above items okay?	Yes	Adjust both compressor oil and refrigerant to specified amount, then go to step 14.
		No	If piping is damaged or cracked, replace it, then go to step 14. If there is no damage, go to next step.
9	Are piping connections loose?	Yes	Tighten connections to specified torque, adjust both compressor oil and refrigerant to specified amount, then go to step 14.
		No	Replace O-ring on piping, adjust both compressor oil and refrigerant to specified amount, then go to step 14.
10	Turn A/C switch off and let air conditioner stop for **10 minutes**. Start engine. Turn both A/C switch and fan switch on. Does malfunction occur after A/C compressor turns on?	Yes	Go to next step.
		No	Replace accumulator tank, then go to step 14. (Since water has intermixed in accumulator tank, replacement is necessary.)
11	Does refrigerant pressure's high-pressure side hardly increase?	Yes	Go to next step. (Pressure hardly increases.)
		No	Reconfirm malfunction symptoms.
12	When engine is racing, does pressure on high-pressure side increase?	Yes	Return to step 3.
		No	Go to next step.
13	Remove A/C compressor and drain compressor oil. ☞ 07–11 A/C COMPRESSOR REMOVAL/INSTALLATION Check charged compressor oil amount. Refill specified compressor oil amount into A/C compressor. After compressor oil is replenished to specified amount, does pressure on high-pressure side increase?	Yes	Troubleshooting completed. (Explain to customer that the cause was insufficient compressor oil.)
		No	Replace A/C compressor, then go to next step. (The cause is defective compression of A/C compressor.)
14	Is cool air discharged? (Are the results of refrigerant system performance test okay?)	Yes	Troubleshooting completed. Explain repairs to customer.
		No	Reconfirm malfunction symptoms, then repeat from step 1 if malfunction reoccurs.

6	**Air does not blow out at all.** **Airflow volume does not change when operating fan switch.**

TROUBLESHOOTING HINTS

Malfunction in blower relay, blower motor, resistor, and fan switch circuit
- Step 1

Malfunction in blower unit circuit
- Fan and blower unit case malfunction

STEP	INSPECTION		ACTION
1	Inspect the following systems, electrical parts. • Blower relay, blower motor, resistor, fan switch. Are they okay?	Yes	Go to next step.
		No	Repair or replace malfunctioning part, then go to step 5.
2	Turn ignition switch to ON. Set to recirculate mode. Does fan in blower unit rotate smoothly?	Yes	Go to step 4.
		No	Go to next step.
3	Inspect fan in blower unit. • Is fan free of interference with blower unit case? • Is fan free of foreign material and obstructions? Is fan okay?	Yes	Go to next step.
		No	Remove obstruction, repair or replace fan and blower unit case, then go to step 5.

STEP	INSPECTION		ACTION
4	Is intake vent of blower unit clogged?	Yes	Remove obstruction, then go to next step.
		No	Check if there are any obstructions in passage from blower unit to heater unit, then go to next step.
5	Is air discharged?	Yes	Troubleshooting completed. Explain repairs to customer.
		No	Reconfirm malfunction symptoms, then repeat from step 1 if malfunction reoccurs.

7	**Air does not blow out on specific airflow mode.**

TROUBLESHOOTING HINTS
Malfunction in VENT mode circuit
- Steps 2—5

Malfunction in HEAT mode circuit
- Step 6

Malfunction in DEFROSTER mode circuit
- Steps 7—9

STEP	INSPECTION		ACTION
1	Does airflow mode change when airflow mode switch is operated?	Yes	Go to next step.
		No	Go to troubleshooting symptom No. 9.
2	Is air discharged when in VENT mode?	Yes	Go to step 6.
		No	Go to next step.
3	Are center and side vent dials at closed position?	Yes	Turn dial to open position, then go to step 10.
		No	Go to next step.
4	Is vent clogged?	Yes	Remove obstruction, then go to step 10.
		No	Go to next step.
5	Is duct in dashboard properly installed and in good condition?	Yes	Check duct for clogging, deformity, and air leakage, then go to step 10.
		No	Securely and properly install duct, then go to step 10.
6	Is air discharged when in HEAT mode?	Yes	Go to next step.
		No	Check vent for clogging, then go to step 10.
7	Is air discharged when in DEFROSTER mode?	Yes	Operation is okay. Reconfirm malfunction symptoms.
		No	Go to next step.
8	Is vent clogged?	Yes	Remove obstruction, then go to step 10.
		No	Go to next step.
9	Is defroster duct properly installed and in good condition?	Yes	Check duct for clogging, deformity, and air leakage, then go to next step.
		No	Securely and properly install duct, then go to next step.
10	Is air discharged from vent?	Yes	Troubleshooting completed. Explain repairs to customer.
		No	Reconfirm malfunction symptoms, then repeat from step 1 if malfunction reoccurs.

8	Air intake mode does not change.

TROUBLESHOOTING HINTS
Malfunction in air intake link circuit
- Air intake link malfunction

Malfunction in IG2 signal circuit of air intake actuator
- Malfunction in wiring harness between A/C 10 A fuse and air intake actuator

Malfunction in air intake actuator circuit
- Air intake actuator malfunction

Malfunction in RECIRCULATE and FRESH signal circuit of heater control unit
- Malfunction in wiring harness between heater control unit and air intake actuator

Malfunction in air intake door circuit
- Heater control unit malfunction
- Air intake door malfunction

STEP	INSPECTION		ACTION
1	Inspect air intake link. • Is link securely and properly installed? • Is link free of obstructions and hindrances? Are above items okay?	Yes	Go to next step.
		No	Install link in proper position. If link is damaged, replace it, then go to step 7.
2*	Measure voltage at terminal B (IG-2 signal) of air intake actuator connector. Is voltage **approximately 12 V**? 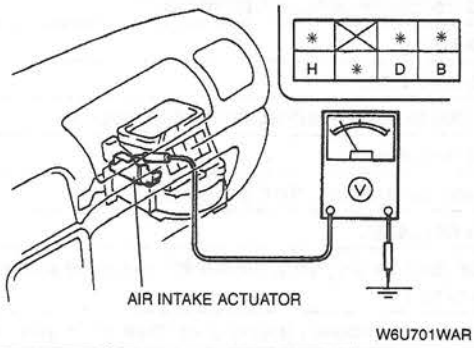 	Yes	Go to next step.
		No	Repair wiring harness between A/C 10 A fuse and air intake actuator, then go to step 7.
3	Remove air intake actuator. Turn ignition switch to ON. Set fan switch at fourth position. Is each air intake mode (RECIRCULATE, FRESH) accessed smoothly when air intake link is operated by hand.	Yes	Go to next step.
		No	Go to step 6.
4	Inspect air intake actuator. ☞ 07–40 AIR INTAKE ACTUATOR INSPECTION Is it okay?	Yes	Go to next step.
		No	Replace air intake actuator, then go to step 7.
5*	Turn ignition switch to LOCK. Disconnect heater control unit 14-pin connector. Check if there is continuity between the following terminals. • Terminal 1H (14-pin, heater control unit) – terminal H (air intake actuator) • Terminal 1J (14-pin, heater control unit) – terminal D (air intake actuator) Are there continuities? 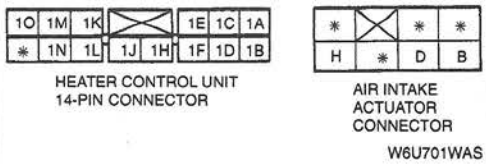 Check if there is no continuity between the above terminals and ground. Are there no continuities?	Yes	Go to next step.
		No	Repair wiring harness between heater control unit and air intake actuator, then go to step 7.

STEP	INSPECTION		ACTION
6	Inspect blower unit's air intake door. • Is door free on obstructions, cracks, and damage? • Is door securely and properly installed? Are above items okay?	Yes	Replace heater control unit, then go to next step.
		No	Remove obstruction, or install door in proper position. If door is cracked or damaged, replace it, then go to next step.
7	Does air intake mode change smoothly?	Yes	Troubleshooting completed. Explain repairs to customer.
		No	Reconfirm malfunction symptoms, then repeat from step 1 if malfunction reoccurs.

9 Airflow mode does not change when operating airflow mode switch.

[TROUBLESHOOTING HINTS]
Malfunction in heater control unit's airflow mode link or airflow mode crank circuit
- Step 1

Malfunction in airflow mode actuator circuit
- Airflow mode actuator malfunction

Malfunction in heater control unit's each signal circuit
- Malfunction in wiring harness between heater control unit and airflow mode actuator

Malfunction in heater unit's each door circuit
- Heater control unit malfunction
- Heater unit's doors malfunction

STEP	INSPECTION		ACTION
1	Remove airflow mode actuator. Inspect heater unit's airflow mode links and airflow mode cranks. • Is there grease on links and clamp? • Are links and clamp securely and properly installed? Are above items okay?	Yes	Go to next step.
		No	Apply grease or properly and securely install links, then go to step 6.
2	Turn ignition switch to ON. Set fan switch at fourth position. Is each airflow mode (VENT, BI-LEVEL, HEAT, HEAT/DEF, DEFROSTER) accessed smoothly when airflow mode main link is operated by hand?	Yes	Go to next step.
		No	Go to step 5.
3	Inspect airflow mode actuator. ☞ 07–40 AIRFLOW MODE ACTUATOR INSPECTION Is it okay?	Yes	Go to next step.
		No	Replace airflow mode actuator, then go to step 6.

STEP	INSPECTION		ACTION
4*	Turn ignition switch to LOCK. Disconnect heater control unit 10-pin and 14-pin connectors. Check if there is continuity between the following terminals. • Terminal 1C (14-pin, heater control unit) – terminal H (airflow mode actuator) • Terminal 1N (14-pin, heater control unit) – terminal F (airflow mode actuator) • Terminal 1O (14-pin, heater control unit) – terminal A (airflow mode actuator) • Terminal 1M (14-pin, heater control unit) – terminal I (airflow mode actuator) • Terminal 1L (14-pin, heater control unit) – terminal G (airflow mode actuator) • Terminal 1K (14-pin, heater control unit) – terminal C (airflow mode actuator) • Terminal 1A (14-pin, heater control unit) – terminal J (airflow mode actuator) • Terminal 2H (10-pin, heater control unit) – terminal D (airflow mode actuator) • Terminal 2I (10-pin, heater control unit) – terminal B (airflow mode actuator) Are there continuities?	Yes	Go to next step.
	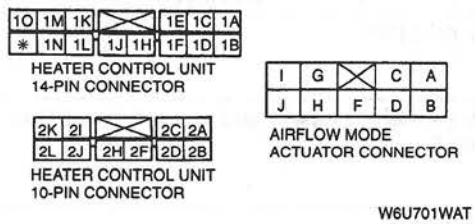 Check if there is no continuity between the above terminals and ground. Are there no continuities?	No	Repair wiring harness between heater control unit and airflow mode actuator, then go to step 6.
5	Inspect heater unit's doors. • Is door free of obstructions, cracks, and damage? • Are doors securely and properly installed? Are above items okay?	Yes	Replace heater control unit, then go to next step.
		No	Remove obstruction, or install doors in proper position. If any doors are cracked or damaged, replace them, then go to next step.
6	Does airflow mode change when airflow mode switch is operated?	Yes	Troubleshooting completed. Explain repairs to customer.
		No	Reconfirm malfunction symptoms, then repeat from step 1 if malfunction reoccurs.

07–10 REFRIGERANT SYSTEM

REFRIGERANT SYSTEM SERVICE WARNINGS 07–10–1
Using/Handling Unapproved Refrigerant 07–10–1
Handling Refrigerant 07–10–1
Storing Refrigerant 07–10–1
REFRIGERANT SYSTEM SERVICE CAUTIONS 07–10–1
Handling Compressor Oil 07–10–1
REFRIGERANT SYSTEM GENERAL PROCEDURES 07–10–2
Manifold Gauge Set Installation 07–10–2
REFRIGERANT SYSTEM PERFORMANCE TEST 07–10–2
REFRIGERANT PRESSURE CHECK .. 07–10–2
REFRIGERANT CHARGING 07–10–3

REFRIGERANT SYSTEM SERVICE WARNINGS

W6U710W01

Using/Handling Unapproved Refrigerant

- **Using a flammable refrigerant, such as OZ-12, in this vehicle is dangerous. In an accident, the refrigerant may catch fire, resulting in serious injury or death. When servicing this vehicle, use only R-134a.**
- **Checking for system leaks on a vehicle that has been serviced with flammable refrigerant, such as OZ-12, is dangerous. Conventional leak detectors use an electronically generated arc which can ignite the refrigerant, causing serous injury or death. If a flammable refrigerant may have been used to service the system, or if you suspect a flammable refrigerant has been used, contact the local fire marshall or EPA office for information on handling the refrigerant.**

Handling Refrigerant

- **Do not allow the refrigerant to leak near fire or any kind of heat. A poisonous gas may be generated if the refrigerant gas contacts fire or heat such as from cigarettes and heaters. When carrying out any operation that can cause refrigerant leakage, extinguish or remove the above-mentioned heat sources and maintain adequate ventilation.**
- **Handling liquid refrigerant is dangerous. A drop of it on the skin can result in localized frostbite. When handling the refrigerant, wear gloves and safety goggles. If refrigerant splashes into the eyes, immediately wash them with clean water and consult a doctor.**

Storing Refrigerant

- **The refrigerant container is highly pressurized. If it is subjected to high heat, it could explode, scattering metal fragments and liquid refrigerant that can seriously injure you. Store the refrigerant at temperatures below 40 °C {104 °F}.**

REFRIGERANT SYSTEM SERVICE CAUTIONS

W6U710W02

Handling Compressor Oil

- **Use only SP–20 compressor oil for this vehicle. Using PAG oil other than SP–20 compressor oil can damage the A/C compressor.**
- **Do not spill SP–20 compressor oil on the vehicle. A drop of compressor oil on the vehicle surface can eat away at the paint. If oil gets on the vehicle, wipe it off immediately.**
- **SP–20 compressor oil (PAG oil) has a higher moisture absorption efficiency than the previously used mineral oil. If moisture mixes with the compressor oil, the refrigerant system could be damaged. Therefore, install caps immediately after using the compressor oil or removing refrigerant system parts to prevent moisture absorption.**

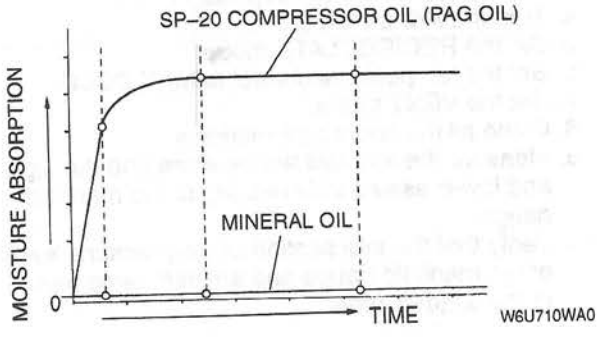

W6U710WA0

REFRIGERANT SYSTEM GENERAL PROCEDURES

W6U710W03

Manifold Gauge Set Installation

1. Fully close the valves of the manifold gauge.
2. Connect the charging hoses to the high- and low-pressure side joints of the manifold gauge.
3. Connect the quick couplers to the ends of the charging hoses.
4. Connect the quick couplers to the charging valves.

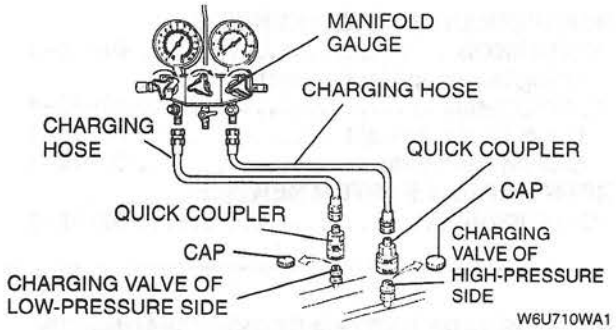

W6U710WA1

REFRIGERANT SYSTEM PERFORMANCE TEST

W6U710W04

1. Warm up the engine and run it at a constant **1,500 rpm.**
2. Set the fan switch at 4th position.
3. Turn the A/C switch on.
4. Set the RECIRCULATE mode.
5. Set the temperature control to MAX COLD.
6. Set the VENT mode.
7. Close all the doors and windows.
8. Wait until the center ventilator temperature stabilizes.
9. Measure the center ventilator temperature.
10. Measure the ambient temperature.
11. Verify that the intersection of the center ventilator temperature and the ambient temperature is in the shaded zone.

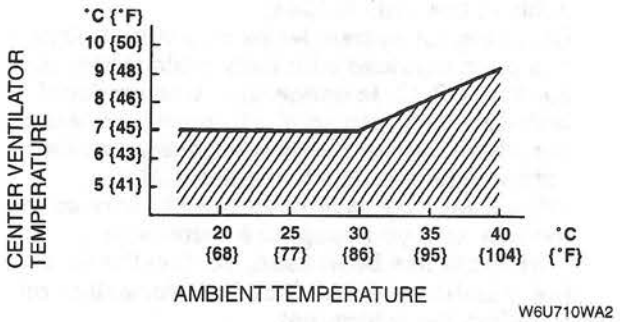

W6U710WA2

12. If not as specified, troubleshoot the refrigerant system. (Refer to 07–01 SYMPTOM TROUBLESHOOTING.)

REFRIGERANT PRESSURE CHECK

W6U710W05

1. Install the manifold gauge set.
2. Warm up the engine and run it at a constant **1,500 rpm.**
3. Set the fan switch at 4th position.
4. Turn the A/C switch on.
5. Set the RECIRCULATE mode.
6. Set the temperature control to MAX COLD.
7. Set the VENT mode.
8. Close all the doors and windows.
9. Measure the ambient temperature and the high- and low-pressure side reading of the manifold gauge.
10. Verify that the intersection of the pressure reading of the manifold gauge and ambient temperature is in the shaded zone.

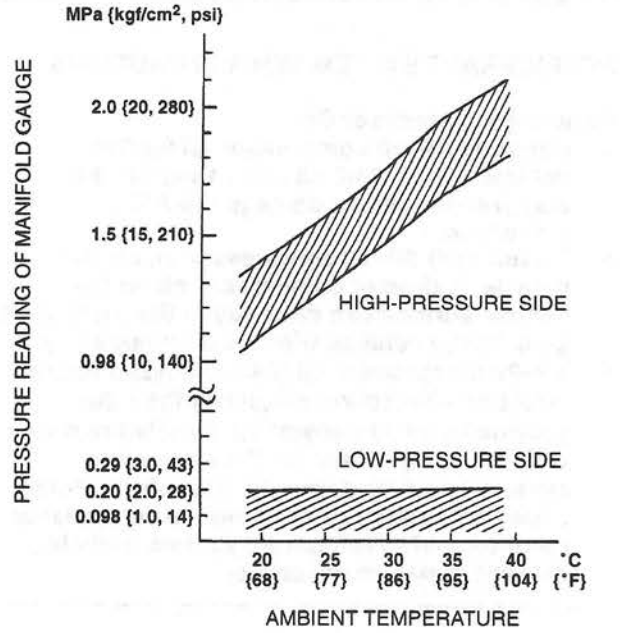

W6U710WA3

11. If not as specified, troubleshoot the refrigerant system. (Refer to 07–01 SYMPTOM TROUBLESHOOTING.)

REFRIGERANT CHARGING

Caution
- **Do not exceed the specification when charging the system with refrigerant. Doing so will decrease the efficiency of the air conditioner or damage the refrigeration cycle parts.**

1. Install the manifold gauge set.
2. Connect the tap pin side of the charging hose to the air purge valve of the manifold gauge.
3. Connect the vacuum pump hose to the center joint of the manifold gauge.
4. Connect the vacuum pump hose to the vacuum pump.
5. Connect the charging hose to the refrigerant tank.
6. Place the refrigerant tank on the scale.

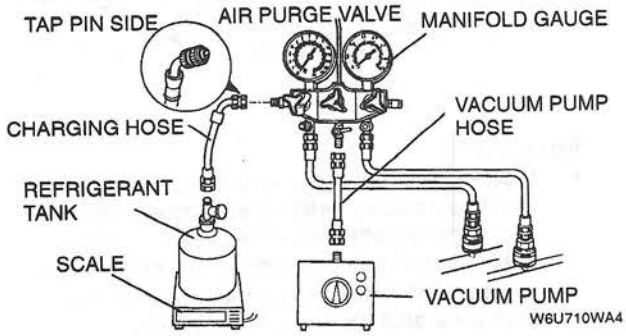

7. Open all the valves of the manifold gauge.

Caution
- **Close the manifold gauge valve immediately after stopping the vacuum pump. If the valve is left open, the vacuum pump oil will backflow into the refrigeration cycle and cause a decrease in the efficiency of the air conditioner.**

8. Start the vacuum pump and let it operate for **15 minutes**.

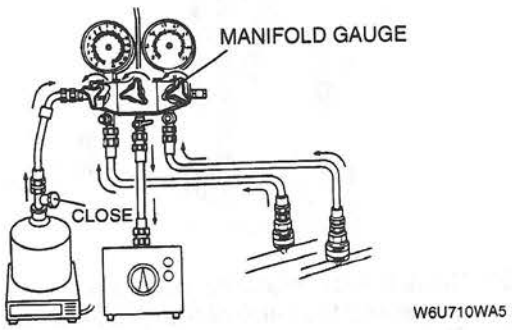

W6U710W06

9. Verify that high- and low-pressure side readings of the manifold gauge are at **–101 kPa {–760 mmHg, –29.9 inHg}**. Close each valve of the manifold gauge.

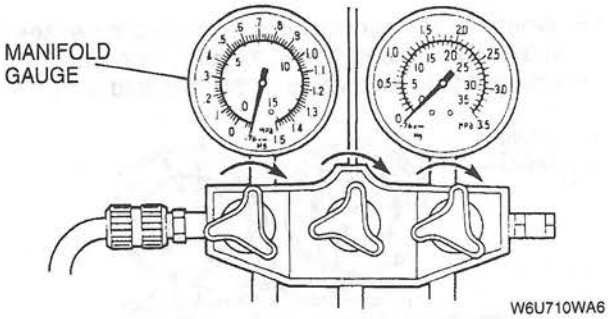

10. Stop the vacuum pump and wait for **5 minutes**.
11. Check the high- and low-pressure side readings of the manifold gauge. If the reading has changed, check for leaks and then repeat from step 7. If the reading has not changed, go to step 12.
12. Open the valve of the refrigerant tank.
13. Weigh the refrigerant tank to charge the suitable amount of refrigerant.

Regular amount of refrigerant
750 g {26.5 oz}

Warning
- **If the refrigerant system is charged with a large amount of refrigerant when checking for gas leakage, and if any leakage should occur, the refrigerant will be released into the atmosphere. In order to prevent the accidental release of refrigerant which can destroy the ozone layer in the stratosphere (causing the "greenhouse effect"), follow the proper procedures and charge with only a small amount of refrigerant when checking for gas leakage.**
- **If charging the system with refrigerant by service cans or refrigerant tank, running the engine with the high-pressure side valve open is dangerous. Pressure within the service cans or refrigerant tank will increase and they could explode, scattering metal fragments and liquid refrigerant that can seriously injure you. Therefore, do not open the high-pressure side valve while the engine is running.**

14. Open the low-pressure side valve of the manifold gauge.

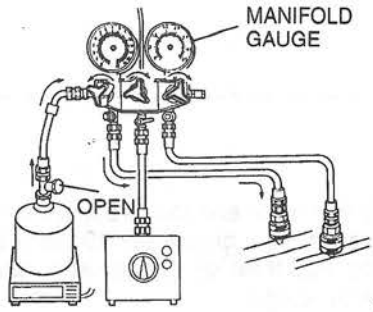

W6U710WA7

15. When the high-pressure side reading increases to **0.098 MPa {1.0 kgf/cm^2, 14 psi}**, close the low-pressure side valve of the manifold gauge.

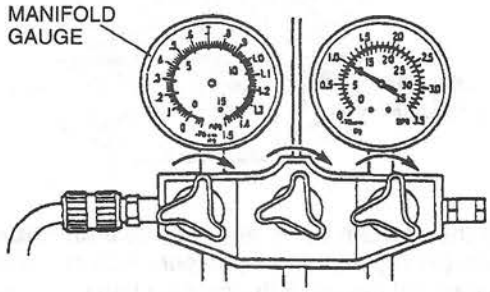

W6U710WA8

16. Check for leaks from the cooler pipe/hose connections by using a gas leak tester. If there are no leaks, go to step 17. If a leak is found at a loose joint, tighten the joint and check for leaks again. If there is still a leak at the same joint, discharge the refrigerant and then repair the joint. Repeat the charging procedure from step 7. If there are no leaks after tightening the joint, go to step 17.

Warning
- **If charging the system with refrigerant by service cans or refrigerant tank, running the engine with the high-pressure side valve open is dangerous. Pressure within the service cans or refrigerant tank will increase and they could explode, scattering metal fragments and liquid refrigerant that can seriously injure you. Therefore, do not open the high-pressure side valve while the engine is running.**

17. Open the low-pressure side valve of the manifold gauge and charge with refrigerant until the weight of refrigerant tank has decreased **350 g {12.4 oz}** from the amount in step 13.

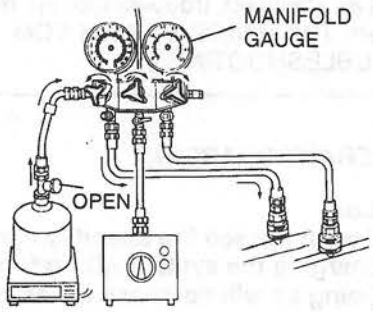

W6U710WA9

18. Close the low-pressure side valve of the manifold gauge.

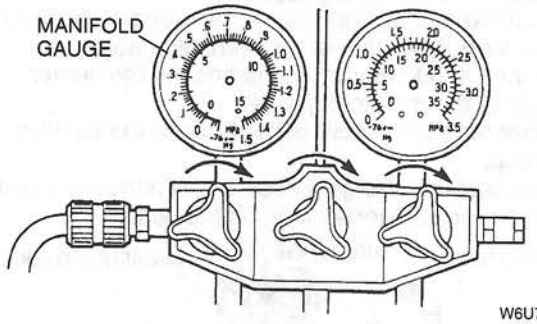

W6U710WAA

Warning
- **If charging the system with refrigerant by service cans or refrigerant tank, running the engine with the high-pressure side valve open is dangerous. Pressure within the service cans or refrigerant tank will increase and they could explode, scattering metal fragments and liquid refrigerant that can seriously injure you. Therefore, do not open the high-pressure side valve while the engine is running.**

19. Start the engine and actuate the A/C compressor.
20. Open the low-pressure side valve of the manifold gauge and charge with refrigerant until the weight of the refrigerant tank has decreased **750 g {26.5 oz}** from the amount in step 13.

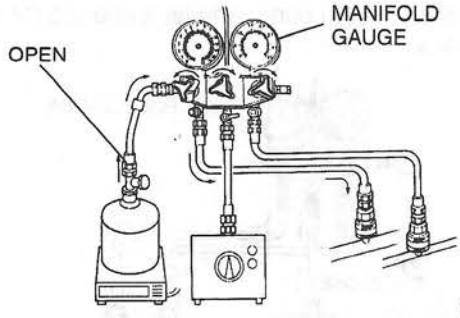

W6U710WAB

21. Close the low-pressure side valve of the manifold gauge and the valve of the refrigerant tank.
22. Stop the engine and A/C compressor.

23. Check for leaks by using a gas leak tester. If there are no leaks, go to step 24. If a leak is found at a loose joint, tighten the joint and check for leaks again. If there is still a leak at the same joint, discharge the refrigerant and then repair the joint. Repeat the charging procedure from step 7. If there are no leaks after tightening the joint, go to step 24.
24. Remove the manifold gauge set.
25. Install the caps to the charging valves.

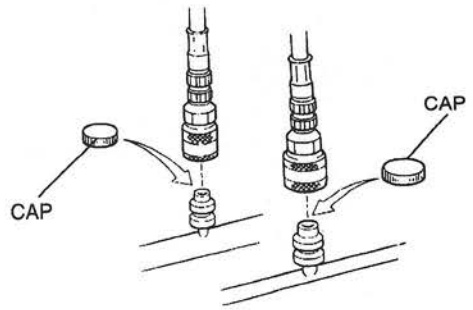

W6U710WAC

07–11 BASIC SYSTEM

BASIC SYSTEM STRUCTURAL VIEW . 07–11–2
BLOWER UNIT
REMOVAL/INSTALLATION 07–11–3
BLOWER UNIT
DISASSEMBLY/ASSEMBLY 07–11–3
COOLING UNIT
REMOVAL/INSTALLATION 07–11–4
Cooling Unit Installation Note 07–11–4
COOLING UNIT
DISASSEMBLY/ASSEMBLY 07–11–5
EVAPORATOR INSPECTION 07–11–5
HEATER UNIT
REMOVAL/INSTALLATION 07–11–5
HEATER UNIT
DISASSEMBLY/ASSEMBLY 07–11–6
AIRFLOW MODE MAIN LINK
REMOVAL/INSTALLATION 07–11–7
Airflow Mode Main Link Installation Note 07–11–7
HEATER CORE INSPECTION 07–11–7
REAR DUCT
REMOVAL/INSTALLATION 07–11–8
REAR HEAT DUCT
REMOVAL/INSTALLATION 07–11–8
A/C COMPRESSOR
REMOVAL/INSTALLATION 07–11–8
A/C Compressor Installation Note 07–11–9
CONDENSER
REMOVAL/INSTALLATION 07–11–9
Condenser Installation Note 07–11–10
CONDENSER INSPECTION 07–11–10
ACCUMULATOR TANK
REMOVAL/INSTALLATION 07–11–10
Accumulator Tank Installation Note ... 07–11–10
ORIFICE TUBE
REMOVAL/INSTALLATION 07–11–11
REFRIGERANT LINES
REMOVAL/INSTALLATION 07–11–11
Refrigerant Lines Removal Note 07–11–12
Refrigerant Lines Installation Note 07–11–12

BASIC SYSTEM STRUCTURAL VIEW

W6U711W01

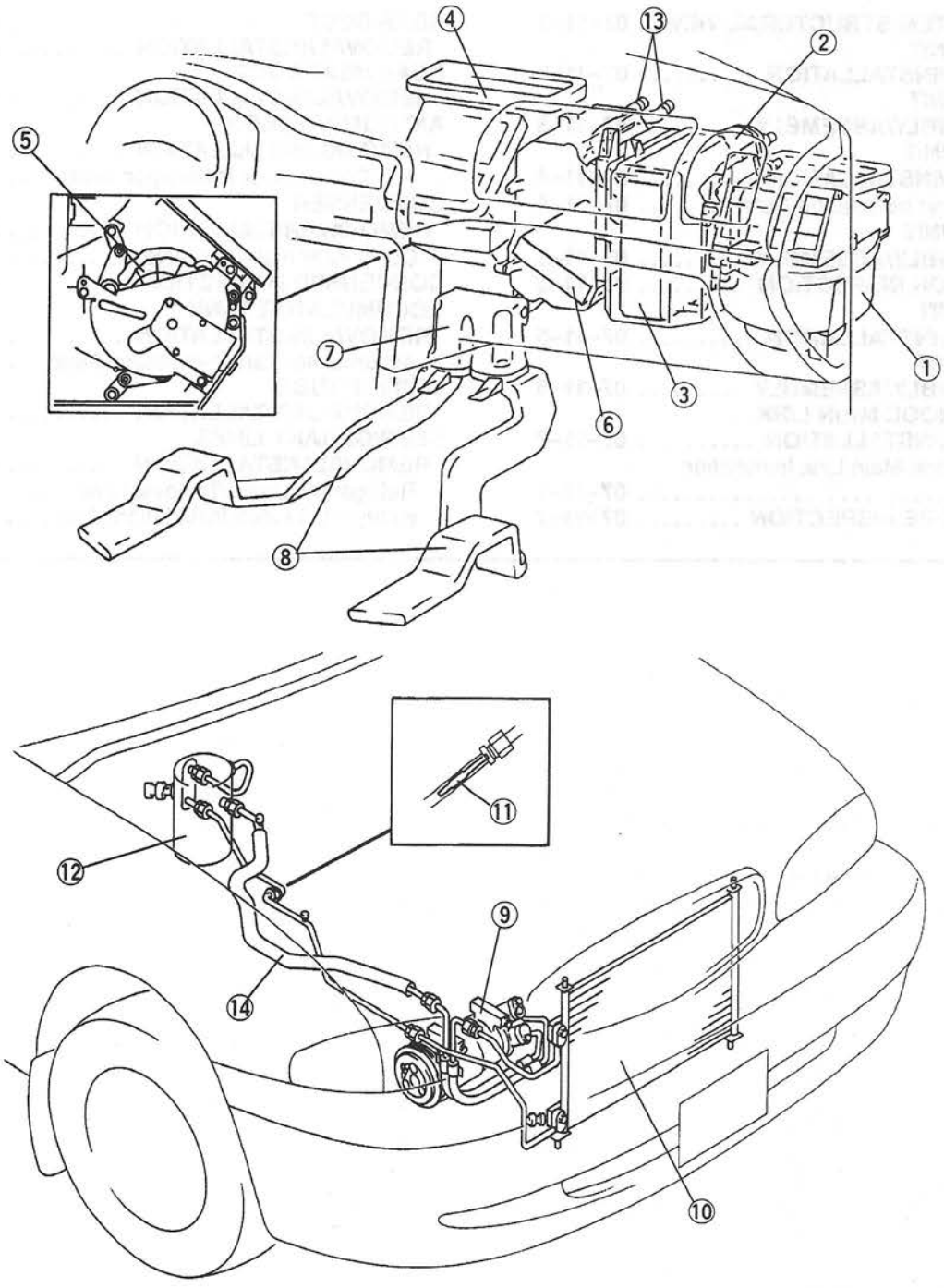

W6U711WA0

1	Blower unit
2	Cooling unit
3	Evaporator
4	Heater unit
5	Airflow mode main link
6	Heater core
7	Rear duct (CANADA only)

8	Rear heat duct (CANADA only)
9	A/C compressor
10	Condenser
11	Orifice tube
12	Accumulator tank
13	Heater hose
14	Refrigerant lines

BLOWER UNIT REMOVAL/INSTALLATION

W6U711W02

1. Disconnect the negative battery cable.
2. Remove the cooling unit. (Refer to 07–11 COOLING UNIT REMOVAL/INSTALLATION.)
3. Remove in the order indicated in the table.
4. Install in the reverse order of removal.

1	Connector
2	Nut
3	Blower unit

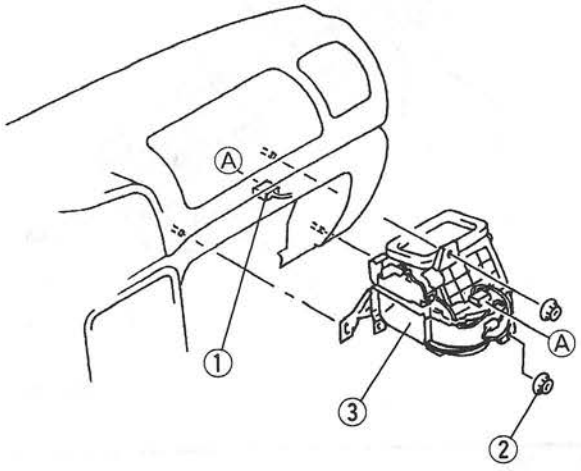

W6U711WA1

BLOWER UNIT DISASSEMBLY/ASSEMBLY

W6U711W03

1. Disassemble in the order indicated in the table.
2. Assemble in the reverse order of disassembly.

1	Blower harness
2	Blower motor
3	Air intake actuator
4	Air intake rod
5	Air intake link
6	Resistor
7	Polyurethane protector
8	Case
9	Air guider
10	Air intake door

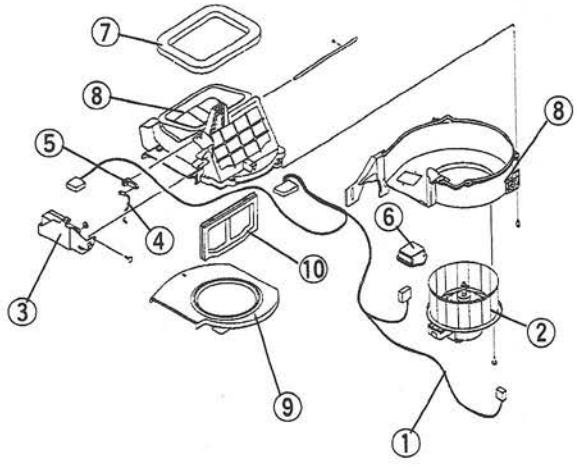

W6U711WA2

COOLING UNIT REMOVAL/INSTALLATION

1. Discharge the refrigerant from the system.
2. Remove the center lower panel. (Refer to 09–17 CENTER LOWER PANEL REMOVAL/INSTALLATION.)

Caution
- **If moisture or foreign material enters the refrigeration cycle, cooling ability will be lowered and abnormal noise will occur. Always immediately plug all open fittings after removing any refrigeration cycle parts to keep moisture or foreign material out of the cycle.**

3. Disconnect the accumulator tank. (Refer to 07–11 ACCUMULATOR TANK REMOVAL/INSTALLATION.)
4. Disconnect cooler pipe No.5. (Refer to 07–11 REFRIGERANT LINES REMOVAL/INSTALLATION.)
5. Remove in the order indicated in the table. Do not allow compressor oil to spill.
6. Install in the reverse order of removal.
7. Recharge with refrigerant. (Refer to 07–10 REFRIGERANT CHARGING.)
8. Perform the refrigerant system performance test. (Refer to 07–10 REFRIGERANT SYSTEM PERFORMANCE TEST.)

W6U711W04

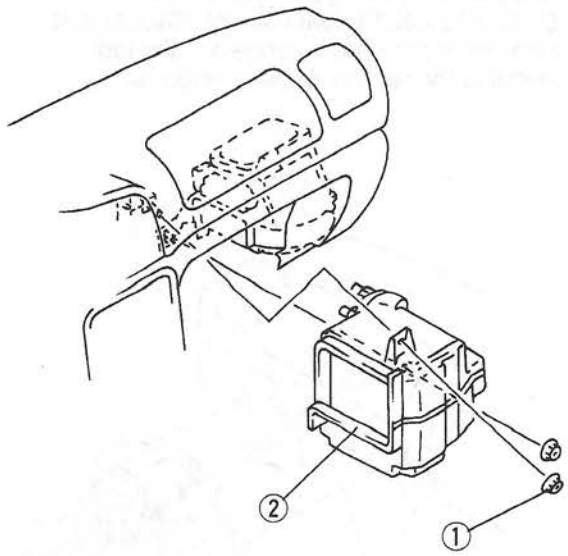

W6U711WA3

1	Nut
2	Cooling unit ☞ Installation Note

Cooling Unit Installation Note
- When installing a new cooling unit (evaporator), add SP-20 compressor oil into the refrigeration cycle.

Supplemental amount
50 ml {50 cc, 1.7 fl oz}

COOLING UNIT DISASSEMBLY/ASSEMBLY

W6U711W05

1. Disassemble in the order indicated in the table.
2. Assemble in the reverse order of disassembly.

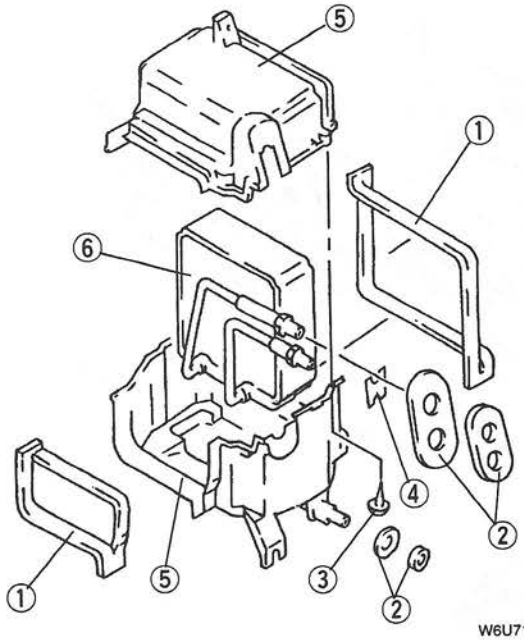

W6U711WA4

1	Polyurethane protector
2	Seal
3	Screw
4	Spacer
5	Case
6	Evaporator

EVAPORATOR INSPECTION

W6U711W06

1. Remove the evaporator from the cooling unit. (Refer to 07–11 COOLING UNIT DISASSEMBLY/ASSEMBLY.)
2. Check for cracks, damage, and oil leakage. If any are found, replace the evaporator.
3. Check for bent fins. If any are bent, use a flathead screwdriver to straighten them.

HEATER UNIT REMOVAL/INSTALLATION

W6U711W07

1. Disconnect the negative battery cable.
2. Drain the engine coolant. (Refer to 01–12 ENGINE COOLANT REPLACEMENT.)
3. Remove the dashboard. (Refer to 09–17 DASHBOARD REMOVAL/INSTALLATION.)
4. Remove the cooling unit. (Refer to 07–11 COOLING UNIT REMOVAL/INSTALLATION.)
5. Remove the rear duct.
6. Disconnect the heater hoses.
7. Remove in the order indicated in the table.
8. Install in the reverse order of removal.

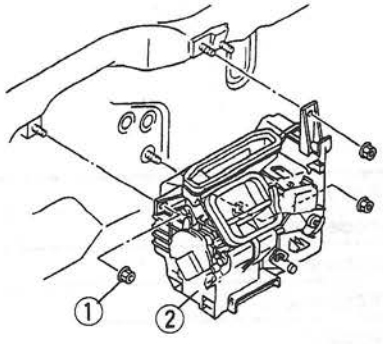

W6U711WA5

1	Nut
2	Heater unit

HEATER UNIT DISASSEMBLY/ASSEMBLY

W6U711W08

1. Disassemble in the order indicated in the table.
2. Assemble in the reverse order of disassembly.

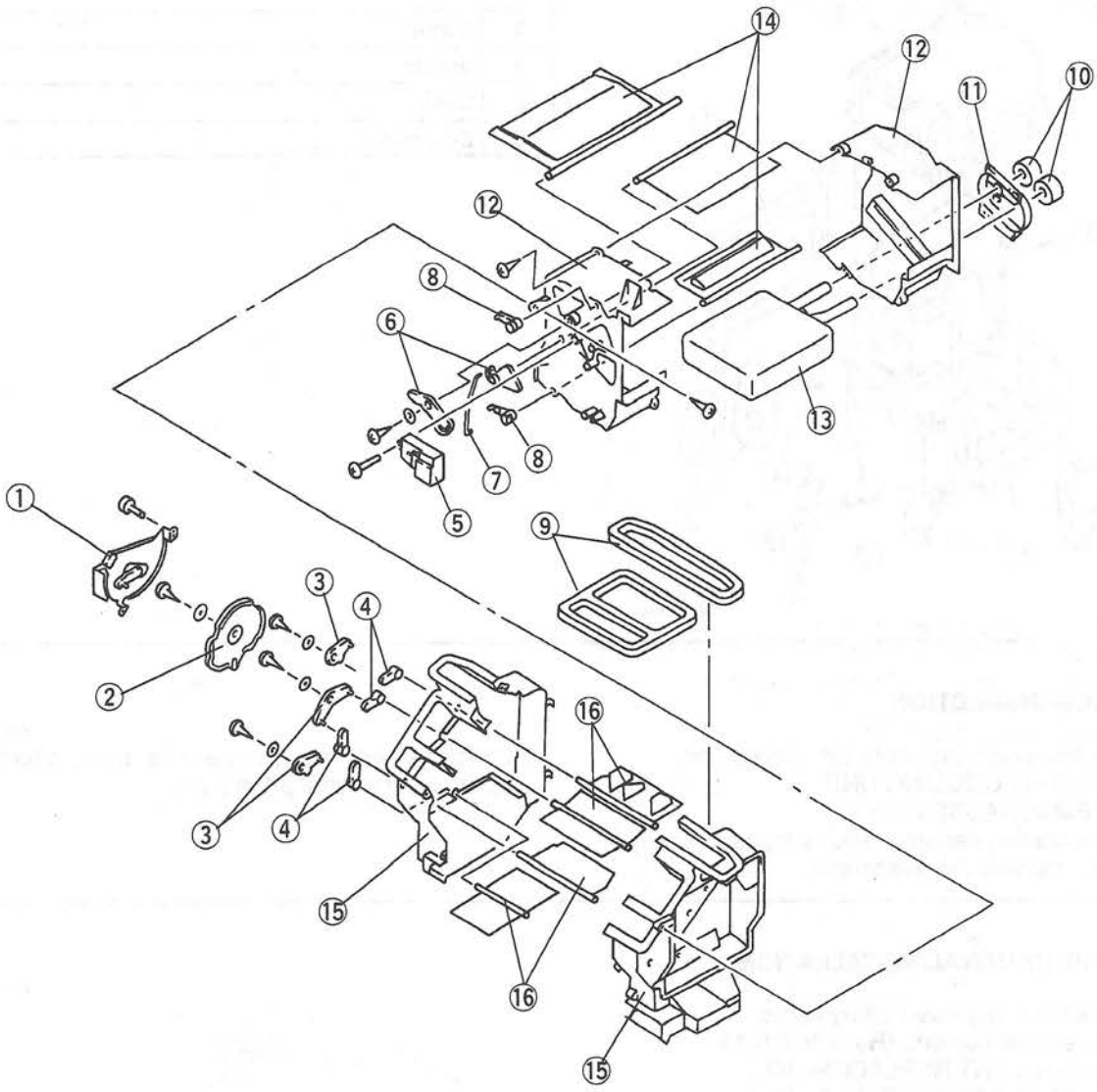

W6U711WA6

1	Airflow mode actuator
2	Airflow mode main link
3	Airflow mode sub link
4	Airflow mode crank
5	Air mix actuator
6	Air mix link
7	Air mix rod
8	Air mix crank

9	Polyurethane protector
10	Seal
11	Cover
12	Case
13	Heater core
14	Air mix door
15	Case
16	Airflow mode door

AIRFLOW MODE MAIN LINK REMOVAL/INSTALLATION

W6U711W09

1. Disconnect the negative battery cable.
2. Remove the airflow mode actuator.
3. Remove in the order indicated in the table.
4. Install in the reverse order of removal.

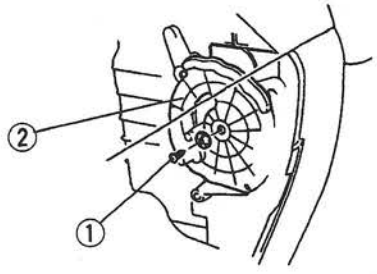

W6U711WA7

1	Screw
2	Airflow mode main link ☞ Installation Note

Airflow Mode Main Link Installation Note

Caution

- **If any grease other than the specified grease is applied to the links, abnormal noise will occur or the links will not properly operate. Therefore, do not apply any grease to the links.**

1. Push and hold each airflow mode sub link in the direction of the arrow.

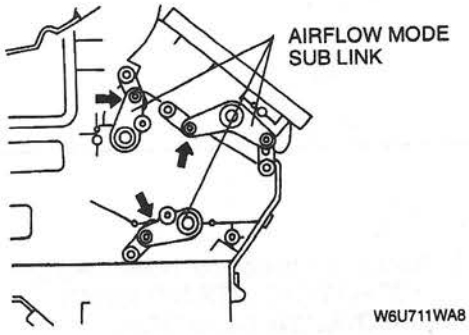

W6U711WA8

2. Set the airflow mode main link to the heater unit as shown in the figure.

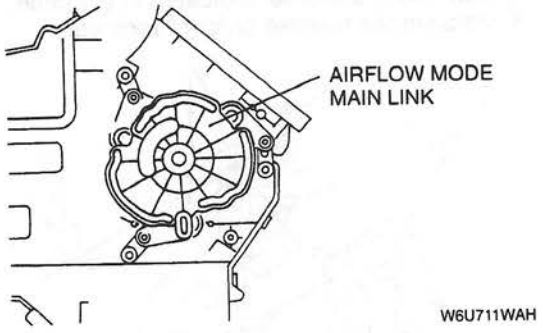

W6U711WAH

3. Press the airflow mode main link lightly and rotate it in the direction of the arrow, then set the projections of each airflow mode sub link into the grooves of the airflow mode main link.

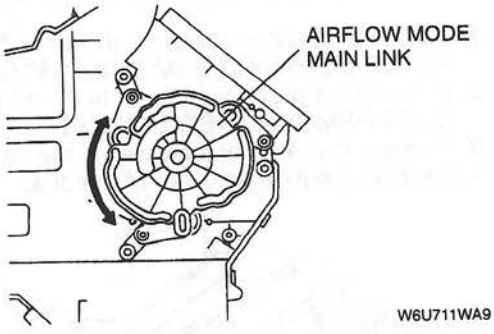

W6U711WA9

4. Rotate airflow mode main link and verify that each mode is accessed properly.

HEATER CORE INSPECTION

W6U711W10

1. Remove the heater core from the heater unit. (Refer to 07–11 HEATER UNIT DISASSEMBLY/ASSEMBLY.)
2. Check for cracks, damage, and coolant leakage. If any are found, replace the heater core.
3. Check for bent fins. If any are bent, use a flathead screwdriver to straighten them.
4. Verify that the heater core inlet and outlet are not distorted or damaged. Repair with pliers if necessary.

REAR DUCT REMOVAL/INSTALLATION

W6U711W11

1. Remove the side wall. (Refer to 09–17 SIDE WALL REMOVAL/INSTALLATION.)
2. Remove in the order indicated in the table.
3. Install in the reverse order of removal.

1	Fastener
2	Rear duct

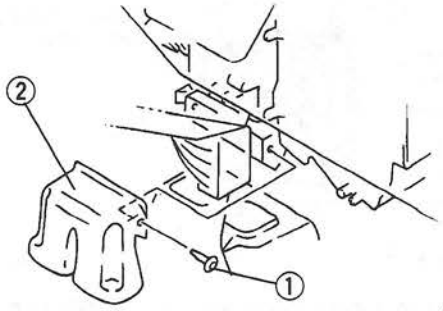

W6U711WAA

REAR HEAT DUCT REMOVAL/INSTALLATION

W6U711W12

1. Turn over the floor covering. (Refer to 09–17 FLOOR COVERING REMOVAL/INSTALLATION.)
2. Remove the rear duct. (Refer to 07–11 REAR DUCT REMOVAL/INSTALLATION.)
3. Remove in the order indicated in the table.
4. Install in the reverse order of removal.

1	Fastener
2	Rear heat duct (RH)
3	Rear heat duct (LH)

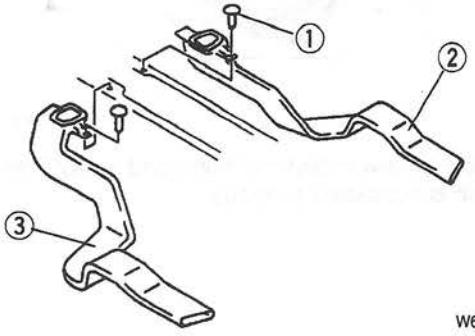

W6U711WAB

A/C COMPRESSOR REMOVAL/INSTALLATION

W6U711W13

1. Discharge the refrigerant from the system.
2. Disconnect the negative battery cable.
3. Remove the under cover.
4. Remove the drive belt.

Caution

- **If moisture or foreign material enters the refrigeration cycle, cooling ability will be lowered and abnormal noise will occur. Always immediately plug all open fittings after removing any refrigeration cycle parts to keep moisture or foreign material out of the cycle.**

5. Disconnect the cooler hoses (HI) and (LO). (Refer to 07–11 REFRIGERANT LINES REMOVAL/INSTALLATION.)
6. Remove in the order indicated in the table. Do not allow compressor oil to spill.
7. Install in the reverse order of removal.
8. Adjust the drive belt. (Refer to 01–10 DRIVE BELT ADJUSTMENT.)
9. Recharge with refrigerant. (Refer to 07–10 REFRIGERANT CHARGING.)
10. Perform the refrigerant system performance test. (Refer to 07–10 REFRIGERANT SYSTEM PERFORMANCE TEST.)

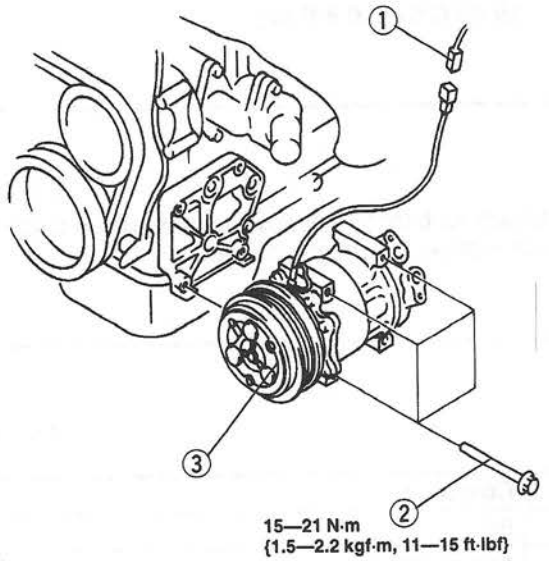

W6U711WAC

1	Connector
2	Bolt
3	A/C compressor ☞ Installation Note

A/C Compressor Installation Note

- Remove the following amount of SP-20 compressor oil from the new A/C compressor when replacing the A/C compressor.

Compressor oil to be removed
240 ml {240 cc, 8.11 fl oz} – [compressor oil from old A/C compressor + 15 ml {15 cc, 0.5 fl oz}]

CONDENSER REMOVAL/INSTALLATION

W6U711W15

1. Discharge the refrigerant from the system.
2. Disconnect the negative battery cable.
3. Remove the upper seal board.

Caution

- **If moisture or foreign material enters the refrigeration cycle, cooling ability will be lowered and abnormal noise will occur. Always immediately plug all open fittings after removing any refrigeration cycle parts to keep moisture or foreign material out of the cycle.**

4. Disconnect cooler pipe No.1 and No.3. (Refer to 07–11 REFRIGERANT LINES REMOVAL/INSTALLATION.)
5. Remove in the order indicated in the table. Do not allow compressor oil to spill.
6. Install in the reverse order of removal.
7. Recharge with refrigerant. (Refer to 07–10 REFRIGERANT CHARGING.)
8. Perform the refrigerant system performance test. (Refer to 07–10 REFRIGERANT SYSTEM PERFORMANCE TEST.)

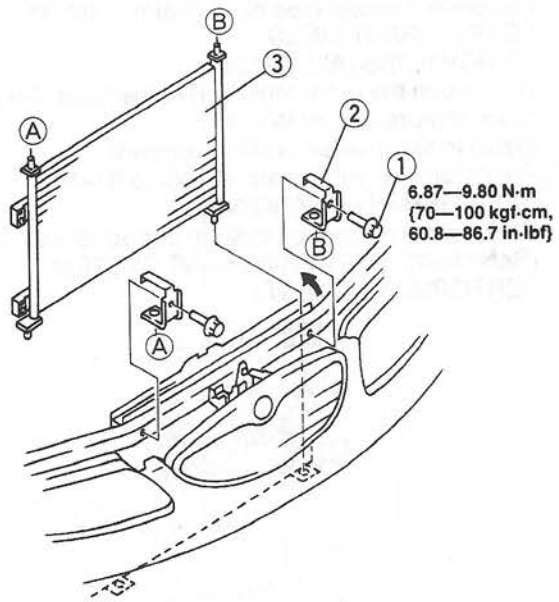

W6U711WAD

1	Bolt
2	Condenser bracket
3	Condenser ☞ Installation Note

Condenser Installation Note
- When installing a new condenser, add SP-20 compressor oil into the refrigeration cycle.

Supplemental amount
25 ml {25 cc, 0.8 fl oz}

CONDENSER INSPECTION

W6U711W14

1. Check for cracks, damage, and oil leakage. If any are found, replace the condenser.
2. Check for fins clogged by dust. If any are clogged, remove the dust from the fins.
3. Check for bent fins. If any are bent, use a flathead screwdriver to straighten them.

ACCUMULATOR TANK REMOVAL/INSTALLATION

W6U711W17

1. Discharge the refrigerant from the system.
2. Disconnect the negative battery cable.

Caution
- **If moisture or foreign material enters the refrigeration cycle, cooling ability will be lowered and abnormal noise will occur. Always immediately plug all open fittings after removing any refrigeration cycle parts to keep moisture or foreign material out of the cycle.**

3. Disconnect cooler pipe No.2 (Refer to 07–11 REFRIGERANT LINES REMOVAL/INSTALLATION.)
4. Remove in the order indicated in the table. Do not allow compressor oil to spill.
5. Install in the reverse order of removal.
6. Recharge with refrigerant. (Refer to 07–10 REFRIGERANT CHARGING.)
7. Perform the refrigerant system performance test. (Refer to 07–10 REFRIGERANT SYSTEM PERFORMANCE TEST.)

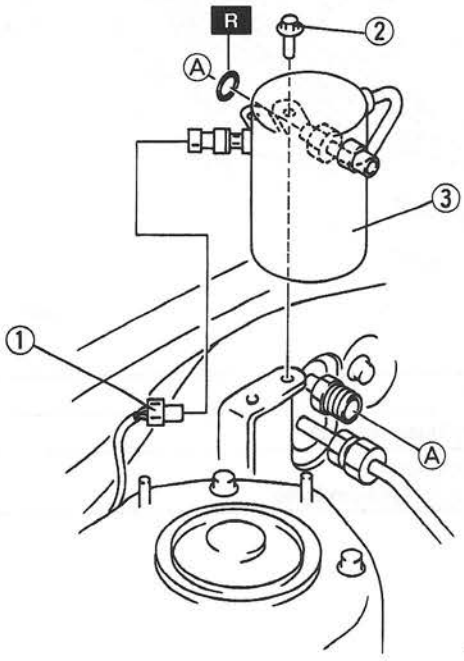

W6U711WAF

1	Connector
2	Bolt
3	Accumulator tank ☞ Installation Note

Accumulator Tank Installation Note
- When installing a new accumulator tank, add SP-20 compressor oil into the refrigeration cycle.

Supplemental amount
15 ml {15 cc, 0.5 fl oz}

ORIFICE TUBE REMOVAL/INSTALLATION

W6U711W16

1. Discharge the refrigerant from the system.
2. Remove cooler pipe No.5. (Refer to 07–11 REFRIGERANT LINES REMOVAL/INSTALLATION.)
3. Remove the orifice tube carefully to prevent it from breaking.
4. Install in the reverse order of removal.
5. Recharge with refrigerant. (Refer to 07–10 REFRIGERANT CHARGING.)
6. Perform the refrigerant system performance test. (Refer to 07–10 REFRIGERANT SYSTEM PERFORMANCE TEST.)

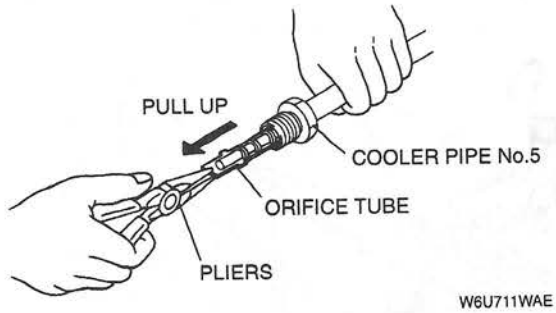

W6U711WAE

REFRIGERANT LINES REMOVAL/INSTALLATION

W6U711W18

1. Discharge the refrigerant from the system.
2. Disconnect the negative battery cable.
3. Disconnect the refrigerant pressure switch (HI) connector, then remove cooler pipe No.3.
4. Remove the bolts and slide the coolant reservoir, then remove the cooler hose (HI), (LO), cooler pipe No.1, No.2, No.3, and No.4.
5. Remove the headlight (RH), then remove cooler pipe No.1 and No.3. (Refer to 09–18 HEADLIGHT REMOVAL/INSTALLATION.)
6. Remove the radiator grille and splash shield, then remove cooler pipe No.3.
7. Remove the accumulator tank, then remove cooler pipe No.5. (Refer to 07–11 ACCUMULATOR TANK REMOVAL/INSTALLATION.)

Caution

- **If moisture or foreign material enters the refrigeration cycle, cooling ability will be lowered and abnormal noise will occur. Always immediately plug all open fittings after removing any refrigeration cycle parts to keep moisture or foreign material out of the cycle.**

8. Remove in the order indicated in the table. Do not allow compressor oil to spill.

Caution

- **If the O-ring is damaged during installation, gas leakage can occur. In order to prevent damaging the O-ring, first hand-tighten the nut or bolt on the piping connection, then use a wrench to tighten into the specification.**

9. Install in the reverse order of removal.
10. Recharge with refrigerant. (Refer to 07–10 REFRIGERANT CHARGING.)
11. Perform out the refrigerant system performance test. (Refer to 07–10 REFRIGERANT SYSTEM PERFORMANCE TEST.)

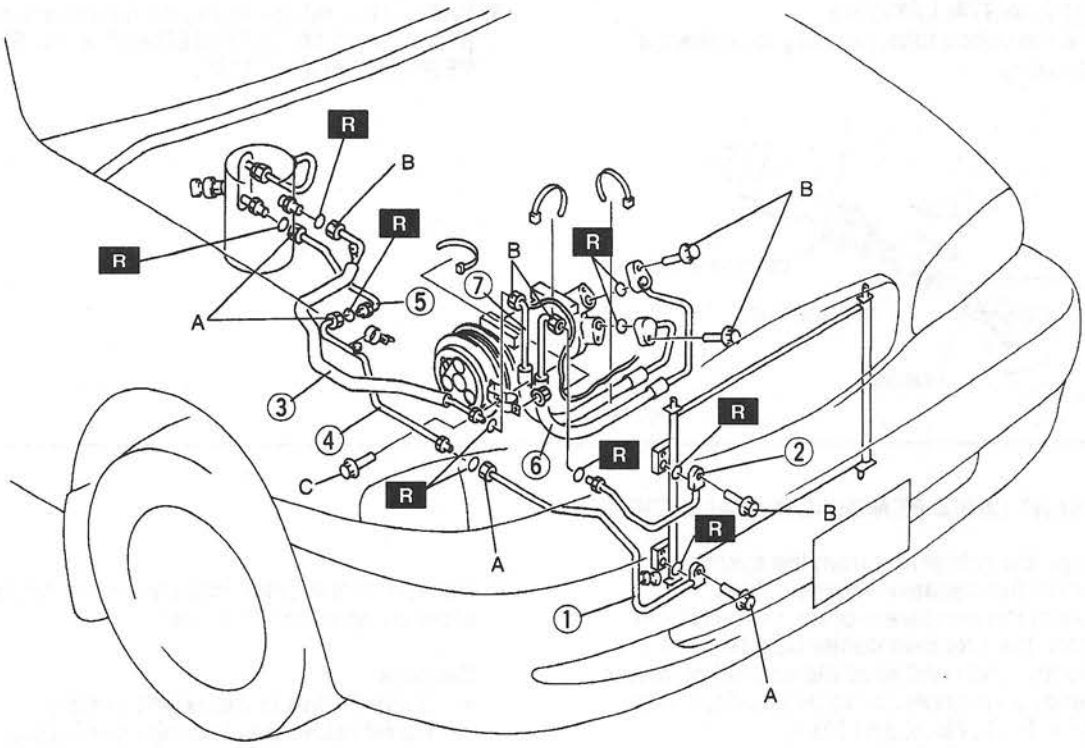

A: 15—24 N·m {1.5—2.5 kgf·m, 11—18 ft·lbf}
B: 20—29 N·m {2.0—3.0 kgf·m, 15—21 ft·lbf}
C: 4.0—5.8 N·m {40—60 kgf·cm, 35—52 in·lbf}

W6U711WAG

1	Cooler pipe No.3 ☞ Refrigerant Lines Removal Note ☞ Refrigerant Lines Installation Note
2	Cooler pipe No.1 ☞ Refrigerant Lines Removal Note ☞ Refrigerant Lines Installation Note
3	Cooler pipe No.2 ☞ Refrigerant Lines Removal Note ☞ Refrigerant Lines Installation Note
4	Cooler pipe No.4 ☞ Refrigerant Lines Removal Note ☞ Refrigerant Lines Installation Note
5	Cooler pipe No.5 ☞ Refrigerant Lines Removal Note ☞ Refrigerant Lines Installation Note
6	Cooler hose (HI) ☞ Refrigerant Lines Removal Note ☞ Refrigerant Lines Installation Note
7	Cooler hose (LO) ☞ Refrigerant Lines Removal Note ☞ Refrigerant Lines Installation Note

Refrigerant Lines Removal Note

- Loosen the nut by using 2 spanners, then remove the cooler pipe.

Refrigerant Lines Installation Note

- Tighten the nut by using a spanner and a torque wrench, then install the cooler pipe or hose.
- Apply compressor oil to O-rings and connect the joint.
- When installing a new cooler pipe or hose, add SP-20 compressor oil into the refrigeration cycle.

Supplemental amount
10 ml {10 cc, 0.3 fl oz}

07–40 CONTROL SYSTEM

CONTROL SYSTEM STRUCTURAL VIEW 07–40–2
AIR INTAKE ACTUATOR REMOVAL/INSTALLATION 07–40–4
AIR INTAKE ACTUATOR INSPECTION 07–40–4
AIR MIX ACTUATOR REMOVAL/INSTALLATION 07–40–5
AIR MIX ACTUATOR INSPECTION 07–40–5
AIRFLOW MODE ACTUATOR REMOVAL/INSTALLATION 07–40–6
AIRFLOW MODE ACTUATOR INSPECTION 07–40–6
BLOWER MOTOR REMOVAL/INSTALLATION 07–40–7
BLOWER MOTOR INSPECTION 07–40–7
CONDENSER FAN REMOVAL/INSTALLATION 07–40–8
CONDENSER FAN INSPECTION 07–40–8
RESISTOR REMOVAL/INSTALLATION 07–40–8
RESISTOR INSPECTION 07–40–9
MAGNETIC CLUTCH DISASSEMBLY/ASSEMBLY 07–40–9
Nut Removal/Installation Note 07–40–9
A/C Compressor Pulley Removal Note 07–40–9
MAGNETIC CLUTCH ADJUSTMENT .. 07–40–10
MAGNETIC CLUTCH INSPECTION 07–40–10
CONDENSER FAN RELAY REMOVAL/INSTALLATION ... 07–40–11
A/C RELAY, BLOWER RELAY, AND CONDENSER FAN RELAY INSPECTION 07–40–11
BLOWER RELAY REMOVAL/INSTALLATION 07–40–11
HEATER CONTROL UNIT REMOVAL/INSTALLATION 07–40–12
REFRIGERANT PRESSURE SWITCH REMOVAL/INSTALLATION 07–40–12
Refrigerant Pressure Switch Installation Note 07–40–12
REFRIGERANT PRESSURE SWITCH INSPECTION 07–40–13
FAN SWITCH INSPECTION 07–40–13
HEATER CONTROL UNIT INSPECTION 07–40–14
Terminal Voltage List (Reference) 07–40–14
FAN SWITCH REMOVAL/INSTALLATION 07–40–15
HEATER CONTROL UNIT BULB REMOVAL/INSTALLATION 07–40–16
SWING LOUVER INSPECTION 07–40–16
SWING LOUVER REMOVAL/INSTALLATION 07–40–16
PRESSURE RELIEF VALVE INSPECTION 07–40–17

CONTROL SYSTEM STRUCTURAL VIEW

W6U740W01

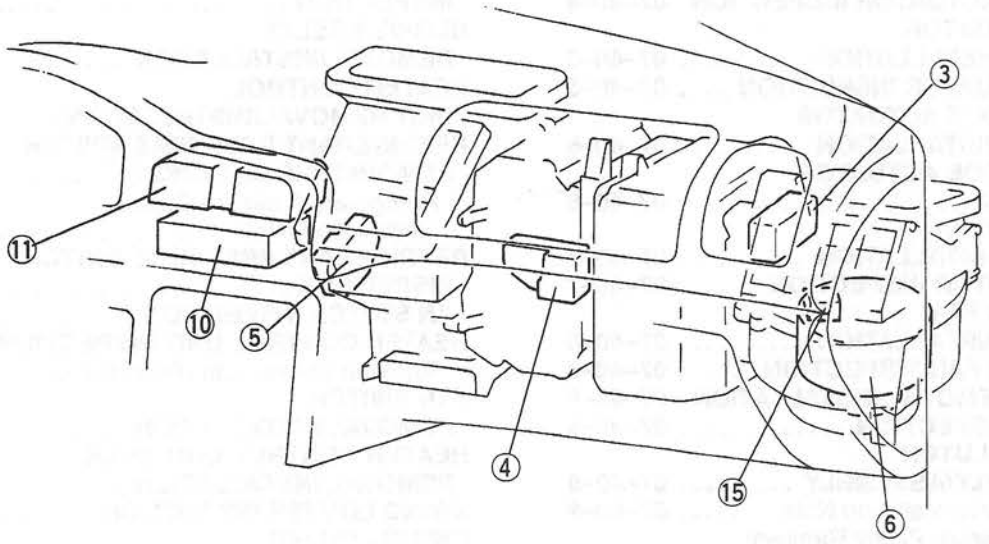

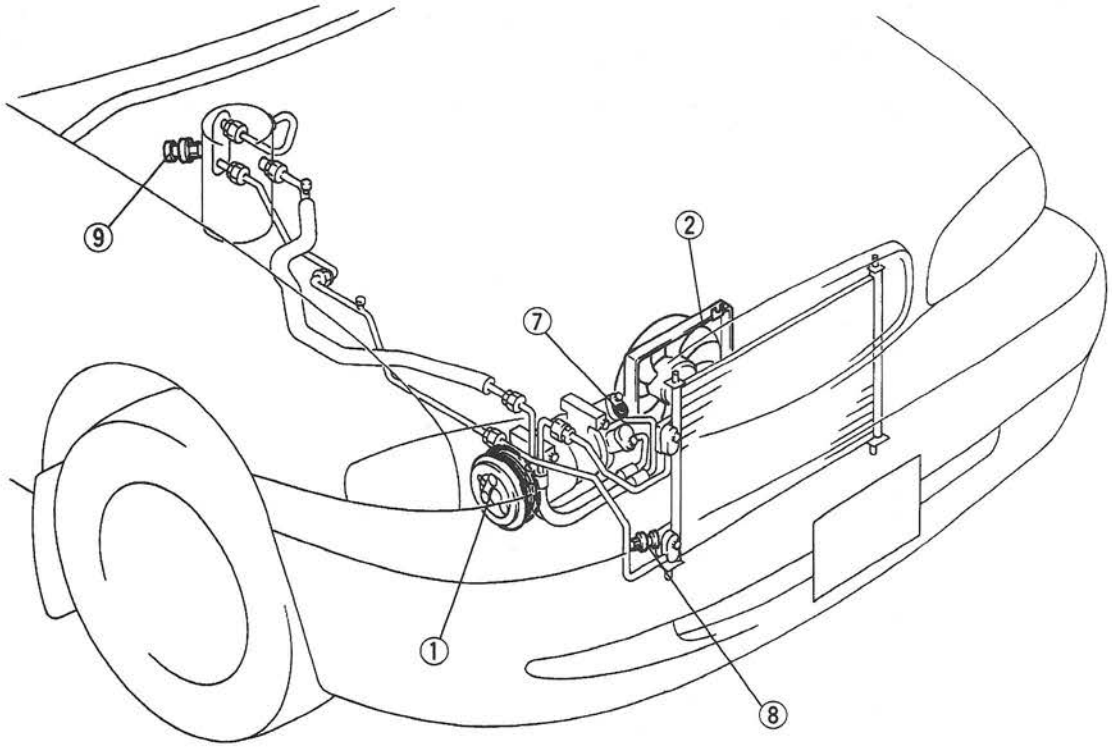

W6U740WA0

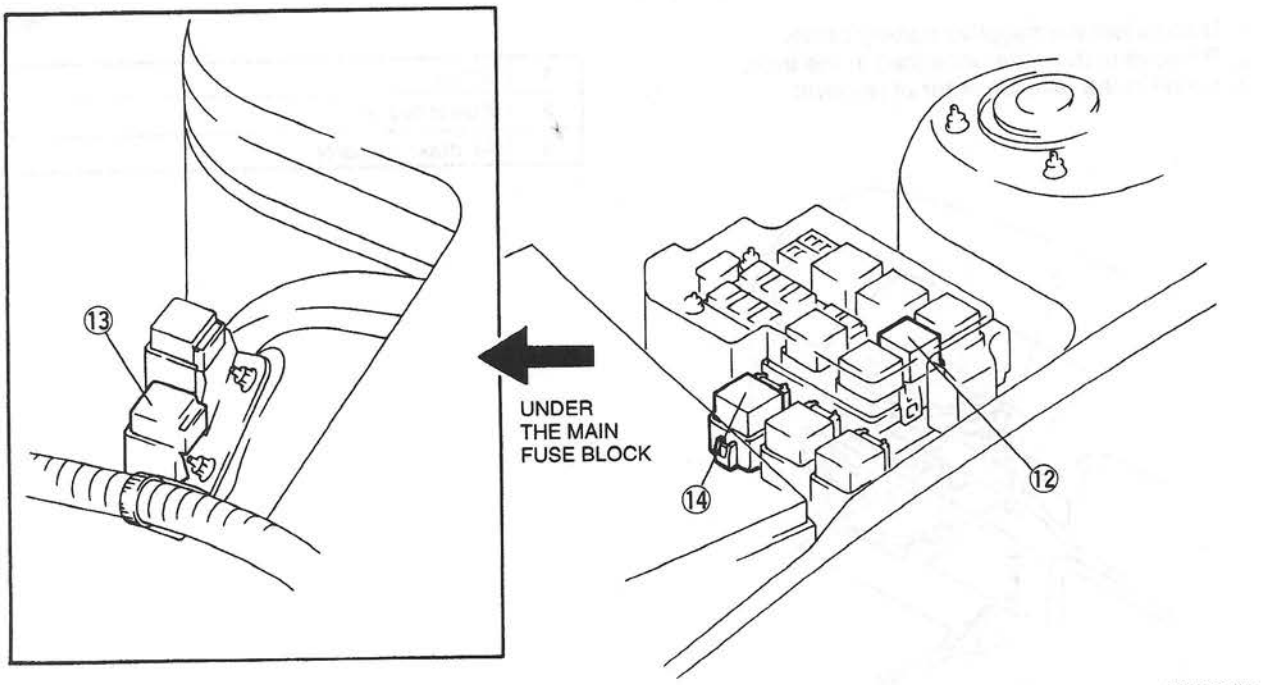

W6U740WA1

1	Magnetic clutch
2	Condenser fan
3	Air intake actuator
4	Air mix actuator
5	Airflow mode actuator
6	Blower motor
7	Pressure relief valve
8	Refrigerant pressure switch (HI)

9	Refrigerant pressure switch (LO)
10	Heater control unit
11	Swing louver
12	A/C relay
13	Blower relay
14	Condenser fan relay
15	Resistor

AIR INTAKE ACTUATOR REMOVAL/INSTALLATION

W6U740W07

1. Disconnect the negative battery cable.
2. Remove in the order indicated in the table.
3. Install in the reverse order of removal.

1	Screw
2	Blower harness
3	Air intake actuator

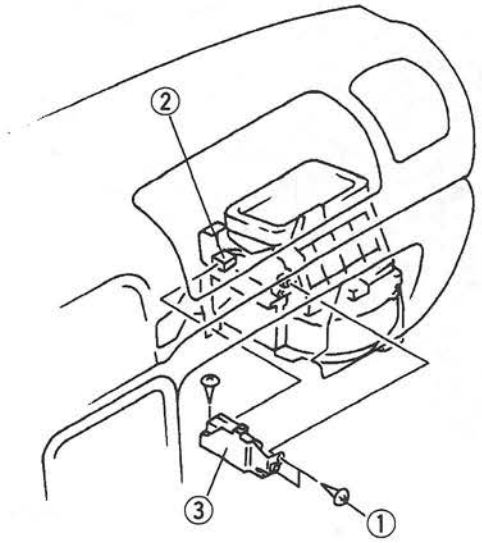

W6U740WAA

AIR INTAKE ACTUATOR INSPECTION

W6U740W08

1. Remove the air intake actuator.
2. Connect battery positive voltage to terminal B and ground to terminal D or H of the air intake actuator.
3. Verify that the air intake actuator operates as shown below.

Connection		Movement
B+	GND	
B	H	FRESH→RECIRCULATE
B	D	RECIRCULATE→FRESH

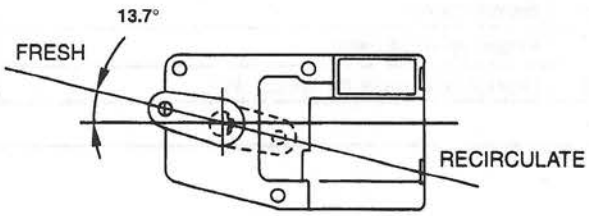

W6U740WAC

4. If not as specified, replace the air intake actuator.

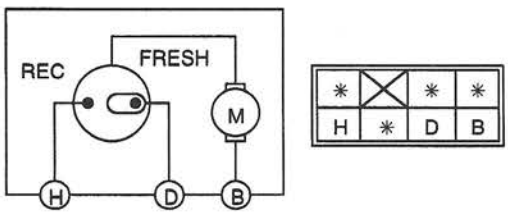

W6U740WAB

AIR MIX ACTUATOR REMOVAL/INSTALLATION

W6U740W09

1. Disconnect the negative battery cable.
2. Remove the glove compartment.
3. Remove in the order indicated in the table.
4. Install in the reverse order of removal.

1	Connector
2	Screw
3	Air mix actuator

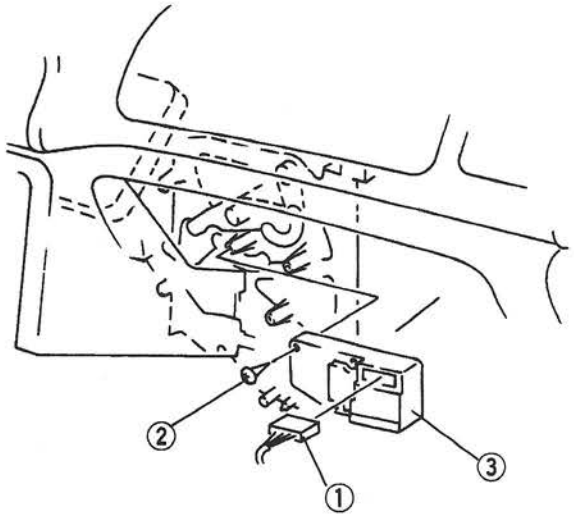

W6U740WAD

AIR MIX ACTUATOR INSPECTION

W6U740W10

1. Remove the air mix actuator.
2. Connect battery positive voltage to terminal D and ground to terminal H, and battery positive voltage to terminal H and ground to terminal D of the air mix actuator.
3. Verify that the air mix actuator operates as shown below.

Connection		Movement
B+	GND	
H	D	HOT→COLD
D	H	COLD→HOT

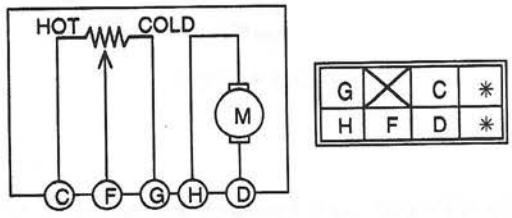

W6U740WAE

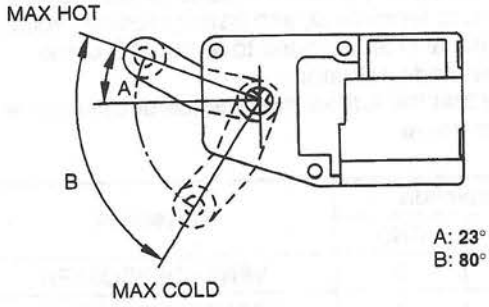

W6U740WAF

4. Verify that the resistance between the terminals of the air mix actuator is as shown in the graph.

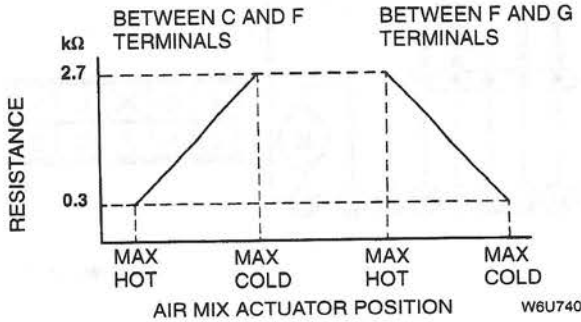

W6U740WAG

5. If not as specified, replace the air mix actuator.

AIRFLOW MODE ACTUATOR REMOVAL/INSTALLATION

W6U740W11

1. Disconnect the negative battery cable.
2. Remove in the order indicated in the table.
3. Install in the reverse order of removal.

1	Connector
2	Screw
3	Airflow mode actuator

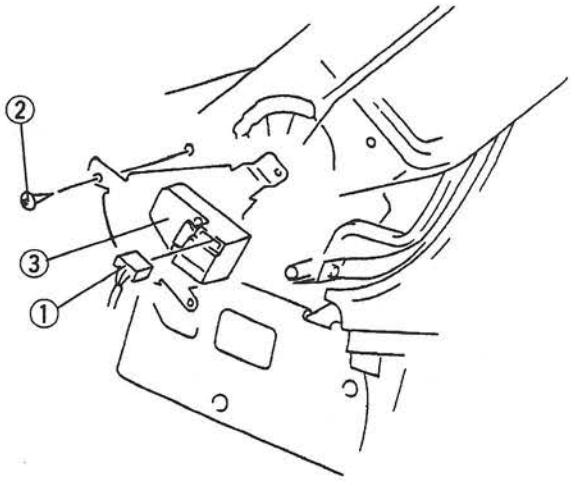

W6U740WAH

AIRFLOW MODE ACTUATOR INSPECTION

W6U740W12

1. Remove the airflow mode actuator.
2. Connect battery positive voltage to terminal B and ground to terminal D, and battery positive voltage to terminal D and ground to terminal B of the airflow mode actuator.
3. Verify that the airflow mode actuator operates as shown below.

Connection		Movement
B+	GND	
B	D	VENT→DEFROSTER
D	B	DEFROSTER→VENT

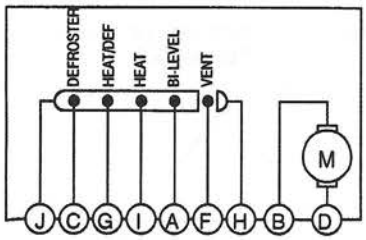

I	G		C	A
J	H	F	D	B

W6U740WAJ

A: 105°
B: 30°
C: 60°
D: 90°
E: 120°

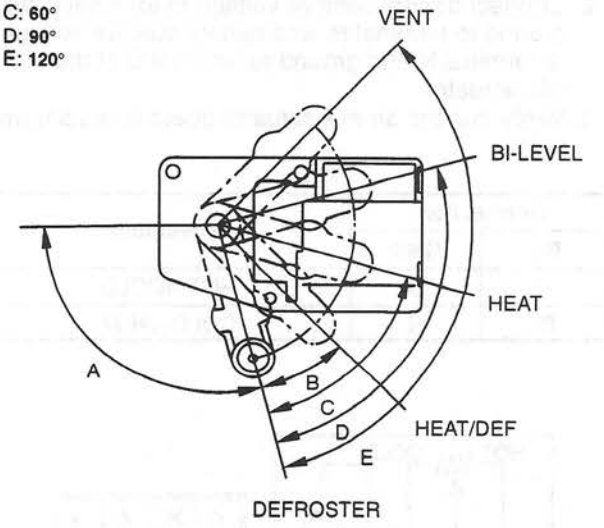

W6U740WAK

4. Check for continuity between the airflow mode actuator terminals by using an ohmmeter.

○—○ : Continuity

Airflow mode	Terminal						
	H	F	A	I	G	C	J
VENT			○	○	○	○	○
BI-LEVEL	○	○		○	○	○	○
HEAT	○	○	○		○	○	○
HEAT/DEF	○	○	○	○		○	○
DEFROSTER	○	○	○	○	○		

W6U740WAL

5. If not as specified, replace the airflow mode actuator.

BLOWER MOTOR REMOVAL/INSTALLATION

W6U740W14

1. Disconnect the negative battery cable.
2. Remove the under cover.
3. Remove in the order indicated in the table.
4. Install in the reverse order of removal.

1	Connector
2	Screw
3	Blower motor

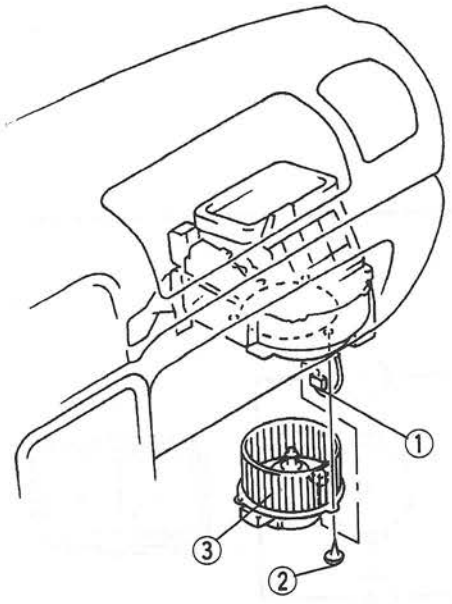

W6U740WAN

BLOWER MOTOR INSPECTION

W6U740W13

1. Remove the under cover.
2. Disconnect the blower motor connector.
3. Connect battery positive voltage to terminal B and ground to terminal A of the blower motor and verify its operation.

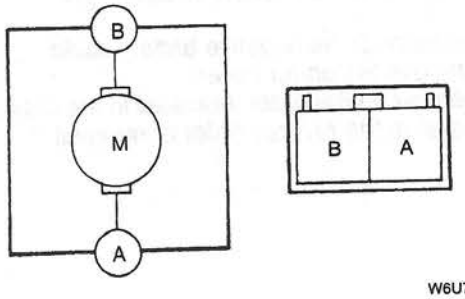

W6U740WAM

4. If not as specified, replace the blower motor.

CONDENSER FAN REMOVAL/INSTALLATION

1. Disconnect the negative battery cable.
2. Remove in the order indicated in the table.
3. Install in the reverse order of removal.

W6U740W06

1	Connector
2	Bolt
3	Condenser fan

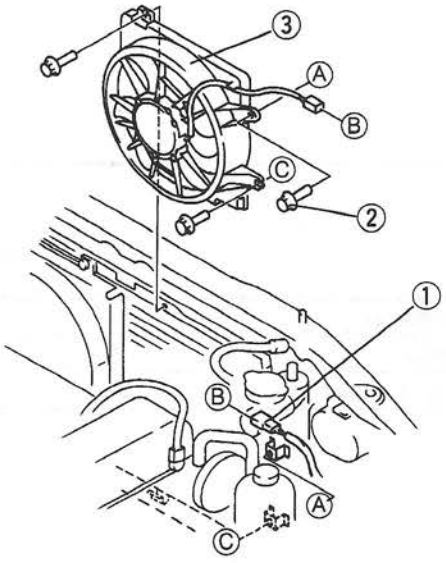

W6U740WA9

CONDENSER FAN INSPECTION

1. Disconnect the condenser fan connector.
2. Connect battery positive voltage to terminal A and ground to terminal B of the condenser fan and verify its operation.

W6U740W05

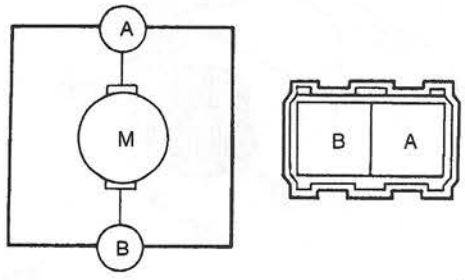

W6U740WA8

3. If not as specified, replace the condenser fan.

RESISTOR REMOVAL/INSTALLATION

1. Disconnect the negative battery cable.
2. Remove the under cover.
3. Remove in the order indicated in the table.
4. Install in the reverse order of removal.

W6U740W29

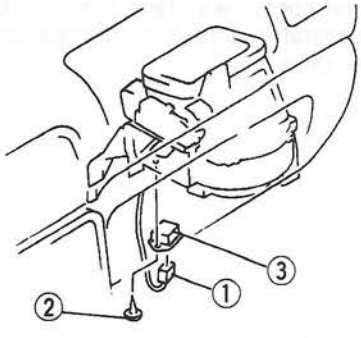

W6U740WB8

1	Connector
2	Screw
3	Resistor

RESISTOR INSPECTION

W6U740W28

1. Remove the under cover.
2. Disconnect the resistor connector.
3. Check for continuity between the terminal C and E of the resistor.
4. Verify that the resistance between the terminals of the resistor is as shown in the table.

Terminal	Resistance (Ω)
C—F	0.25—0.31
C—B	0.83—0.97
C—A	2.21—2.59

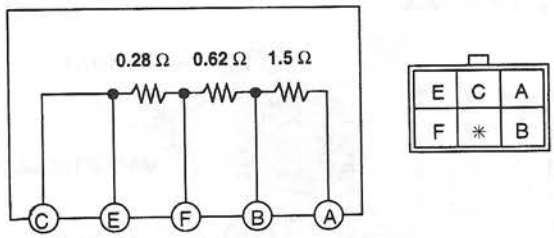

W6U740WB7

5. If not as specified, replace the resistor.

MAGNETIC CLUTCH DISASSEMBLY/ASSEMBLY

W6U740W04

1. Disassemble in the order indicated in the table.
2. Assemble in the reverse order of disassembly.
3. Adjust the magnetic clutch clearance. (Refer to 07–40 MAGNETIC CLUTCH ADJUSTMENT.)

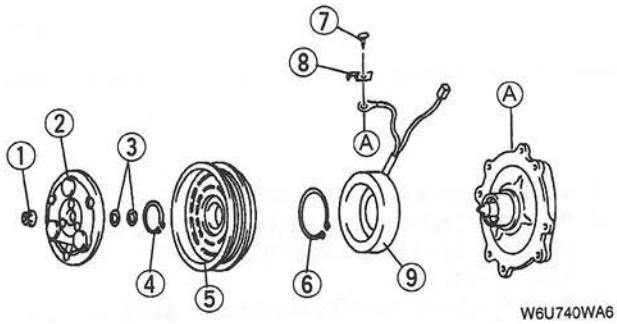

W6U740WA6

1	Nut ☞ Removal/Installation Note
2	Pressure plate
3	Shim
4	Snap ring
5	A/C compressor pulley ☞ Removal Note
6	Snap ring
7	Screw
8	Clip
9	Stator

Nut Removal/Installation Note

- When removing or installing the nut, hold the pressure plate in place as shown in the figure.

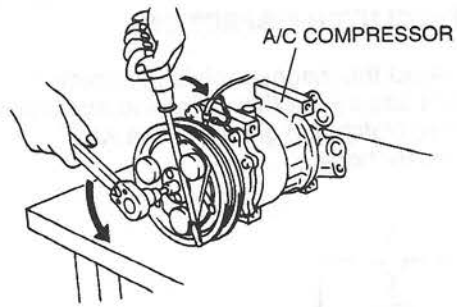

W6U740WA7

A/C Compressor Pulley Removal Note

- When removing the A/C compressor pulley, remove it by using a puller.

MAGNETIC CLUTCH ADJUSTMENT

1. Remove and set the A/C compressor on a level block. (Refer to 07–11 A/C COMPRESSOR REMOVAL/INSTALLATION.)
2. Turn on the magnetic clutch by connecting the battery positive voltage to the magnetic clutch connector terminal and the ground to the A/C compressor body.
3. Fix a dial gauge on a magnetic base and set the probe onto measuring point A on the pressure plate surface.

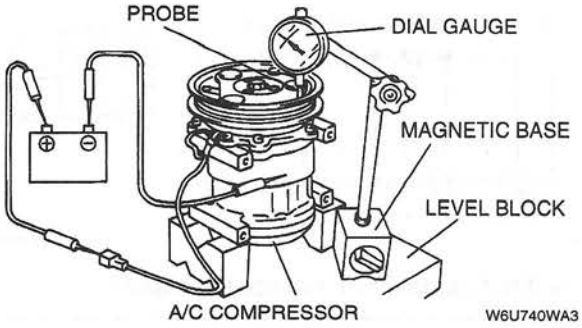

W6U740WA3

4. Turn off the magnetic clutch by disconnecting the ground from the A/C compressor body, then measure the dial gauge readings.
5. Measure the clearance for point B and C on the pressure plate surface by repeating the above steps 2 through 4.

Clearance
0.35—0.65 mm {0.014—0.025 in}

W6U740W03

MEASURING POINT

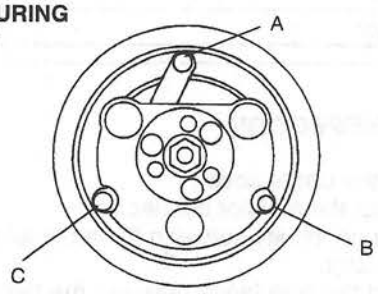

W6U740WA4

6. If not within the specification, remove the pressure plate and adjust the clearance by changing the shim size or the number of shims. (Refer to 07–40 MAGNETIC CLUTCH DISASSEMBLY/ASSEMBLY.)

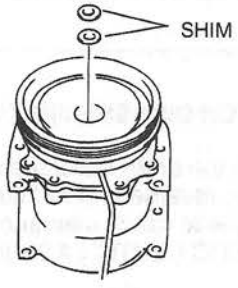

W6U740WA5

MAGNETIC CLUTCH INSPECTION

W6U740W02

1. Disconnect the magnetic clutch connector.
2. Connect battery positive voltage to terminal A of magnetic clutch and ground to the A/C compressor body.

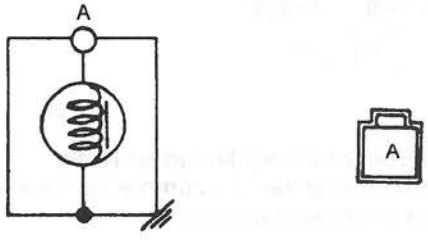

W6U740WA2

3. Verify that the magnetic clutch operates.
4. If not as specified, adjust the magnetic clutch. (Refer to 07–40 MAGNETIC CLUTCH ADJUSTMENT.)
5. If the magnetic clutch clearance is okay, replace the stator.

CONDENSER FAN RELAY REMOVAL/INSTALLATION

W6U740W27

1. Disconnect the negative battery cable.
2. Remove in the order indicated in the table.
3. Install in the reverse order of removal.

1	Connector
2	Condenser fan relay

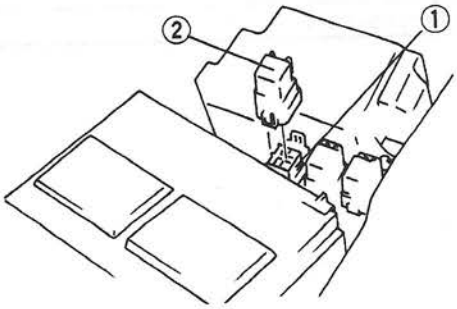

W6U740WB6

A/C RELAY, BLOWER RELAY, AND CONDENSER FAN RELAY INSPECTION

W6U740W25

1. Remove the relay.
2. Check for continuity between the relay terminals by using an ohmmeter.

○—○ : Continuity

Step	Terminal			
	B	F	A	E
1	○	○		
2	B+	GND	○	○

W6U740WB3

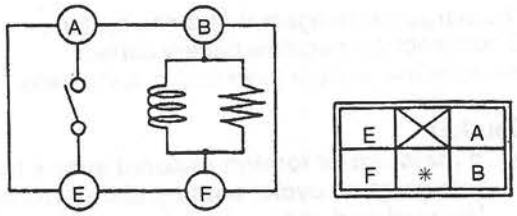

W6U740WB4

3. If not as specified, replace the relay.

BLOWER RELAY REMOVAL/INSTALLATION

W6U740W26

1. Disconnect the negative battery cable.
2. Remove the nuts to move the main fuse block to the side.
3. Remove in the order indicated in the table.
4. Install in the reverse order of removal.

1	Connector
2	Blower relay

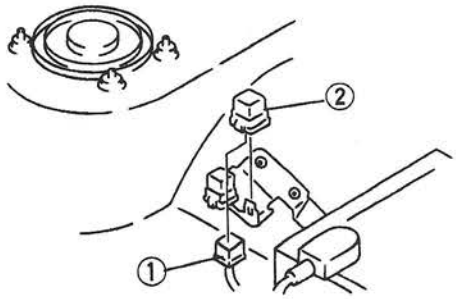

W6U740WB5

HEATER CONTROL UNIT REMOVAL/INSTALLATION

W6U740W18

1. Disconnect the negative battery cable.
2. Remove the meter hood. (Refer to 09–17 METER HOOD REMOVAL/INSTALLATION.)
3. Remove in the order indicated in the table.
4. Install in the reverse order of removal.

1	Screw
2	Connector
3	Heater control unit

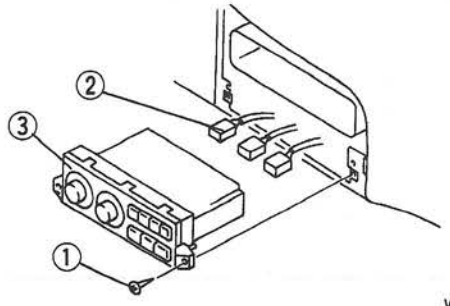

W6U740WAV

REFRIGERANT PRESSURE SWITCH REMOVAL/INSTALLATION

W6U740W17

1. Discharge the refrigerant from the system.
2. Disconnect the negative battery cable.
3. Remove the radiator grille and splash shield.

Caution

- **If moisture or foreign material enters the refrigeration cycle, cooling ability will be lowered and abnormal noise will occur. Always, immediately plug all open fittings after removing any refrigeration cycle parts to keep moisture or foreign material out of the cycle.**

4. Remove in the order indicated in the table.
5. Install in the reverse order of removal.
6. Recharge with refrigerant. (Refer to 07–10 REFRIGERANT CHARGING.)
7. Perform the refrigerant system performance test. (Refer to 07–10 REFRIGERANT SYSTEM PERFORMANCE TEST.)

LO

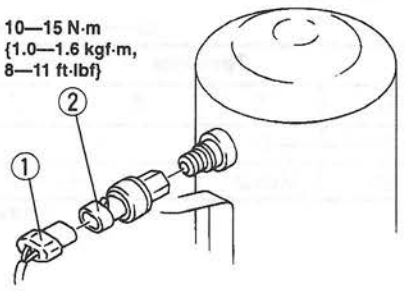

W6U740WAU

1	Connector
2	Refrigerant pressure switch ☞ Installation Note

Refrigerant Pressure Switch Installation Note

- Apply compressor oil to the O-ring and connect the joint.

HI

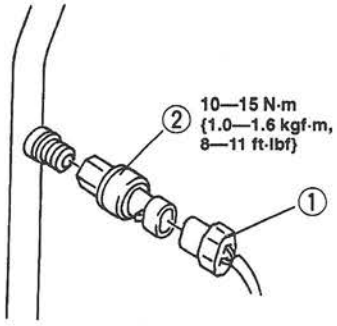

W6U740WAT

REFRIGERANT PRESSURE SWITCH INSPECTION

W6U740W16

1. Install the manifold gauge set.
2. Disconnect the refrigerant pressure switch connector.
3. Verify the high- and low-pressure side reading of manifold gauge.
4. Check for continuity between terminals of the refrigerant pressure switch.

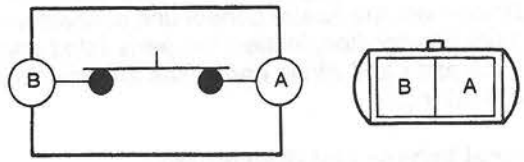

W6U740WAS

HI

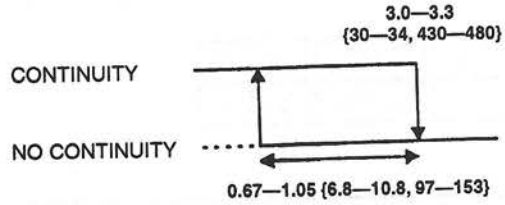

W6U740WAQ

LO

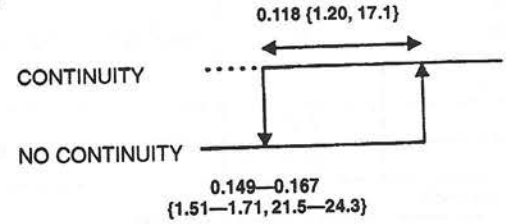

W6U740WAR

5. If not as specified, replace the refrigerant pressure switch.

FAN SWITCH INSPECTION

W6U740W20

1. Remove the heater control unit. (Refer to 07–40 HEATER CONTROL UNIT REMOVAL/INSTALLATION.)
2. Check for continuity between the fan switch terminals by using an ohmmeter.

○—○ : Continuity

Switch position	Terminal					
	A	B	C	D	E	F
0						
1	○	—	—	—	—	○
2				○	—	○
3			○	—	○	○
4		○	—	—	○	○

W6U740WAX

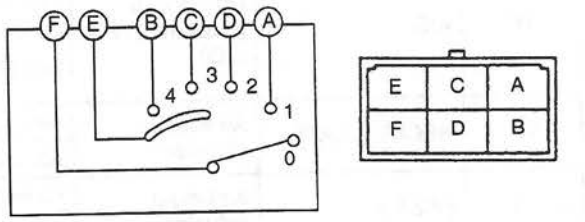

W6U740WAY

3. If not as specified, replace the fan switch.

HEATER CONTROL UNIT INSPECTION

W6U740W19

1. Slide out the heater control unit with the connectors still connected. (Refer to 07–40 HEATER CONTROL UNIT REMOVAL/INSTALLATION.)
2. Measure the voltage at each heater control unit terminal and refer to the terminal voltage list.
3. Disconnect the heater control unit connector before checking for continuity at terminal 2B and 2J.
4. If not as specified, inspect the parts listed under "Inspection area" and the related wiring harnesses.
5. If the parts and wiring harnesses are okay but the system still does not work properly, replace the heater control unit.

Terminal Voltage List (Reference)

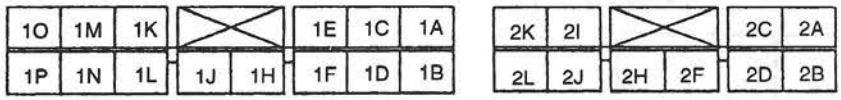

W6U740WAW

Terminal	Signal	Connection	Test condition		Voltage (V)/ Continuity	Inspection area
1A	Common power source	Airflow mode actuator	Moving to DEFROSTER		0.5	Airflow mode actuator
			Moving to VENT		10.5	
1B	Panel light control	Panel light control SW	☞ 09–18 PANEL LIGHT CONTROL SWITCH, Terminal Voltage List (Reference), C terminal inspection		—	Panel light control SW
1C	Common power source	Airflow mode actuator	Moving to VENT		0.5	Airflow mode actuator
			Moving to DEFROSTER		10.5	
1D	TNS	TNS relay	Headlight switch at TNS position		B+	TNS relay
			Headlight switch at OFF		0	
1E	Fan SW	• Fan SW • Resistor	Fan SW	Off	B+	• Fan SW • Resistor
				1st position	0.1	
				2nd position	0.3	
				3rd position	0.5	
				4th position	0.4	
1F	A/C	Refrigerant pressure SW (LO)	Fan SW and A/C SW off		B+	• Refrigerant pressure SW (LO) • Refrigerant pressure SW (HI) • ECM/PCM
			Fan SW and A/C SW on		0	
1H	RECIRCULATE	Air intake actuator	Air intake mode at RECIRCULATE		0	Air intake actuator
			Air intake mode at FRESH		B+	
1J	FRESH	Air intake actuator	Air intake mode at FRESH		0	Air intake actuator
			Air intake mode at RECIRCULATE		B+	
1K	DEFROSTER	Airflow mode actuator	Airflow mode at DEFROSTER		0	Airflow mode actuator
			Other		10.6	
1L	HEAT/DEF	Airflow mode actuator	Airflow mode at HEAT/DEF		0	Airflow mode actuator
			Other		10.6	
1M	HEAT	Airflow mode actuator	Airflow mode at HEAT		0	Airflow mode actuator
			Other		10.6	
1N	VENT	Airflow mode actuator	Airflow mode at VENT		0	Airflow mode actuator
			Other		10.6	
1O	BI-LEVEL	Airflow mode actuator	Airflow mode at BI-LEVEL		0	Airflow mode actuator
			Other		10.6	
1P	—	Not used	—		—	—
2A	+5 V	Air mix actuator	IG SW at ON		5	—
			IG SW at LOCK or ACC		0	

Terminal	Signal	Connection	Test condition	Voltage (V)/ Continuity	Inspection area
2B	GND	Air mix actuator	Constant: Check for continuity to ground	Yes	—
2C	Motor drive	Air mix actuator	Moving to HOT	0.6	Air mix actuator
			Moving to COLD	10.7	
2D	Potentiometer input	Air mix actuator	Airflow temperature mode at MAX HOT	4.3	Air mix actuator
			Airflow temperature mode at MAX COLD	0.6	
2F	Motor drive	Air mix actuator	Moving to COLD	0.6	Air mix actuator
			Moving to HOT	10.7	
2H	Motor drive	Airflow mode actuator	Moving to VENT	10.6	Airflow mode actuator
			Moving to DEFROSTER	0.7	
2I	Motor drive	Airflow mode actuator	Moving to DEFROSTER	10.6	Airflow mode actuator
			Moving to VENT	0.7	
2J	GND	GND	Constant: Check for continuity to ground	Yes	—
2K	Power supply	ROOM 15 A fuse	Constant	B+	ROOM 15 A fuse
2L	IG2	A/C 10 A fuse	IG SW at ON	B+	A/C 10 A fuse
			IG SW at LOCK or ACC	0	

FAN SWITCH REMOVAL/INSTALLATION

W6U740W21

1. Disconnect the negative battery cable.
2. Remove the heater control unit. (Refer to 07–40 HEATER CONTROL UNIT REMOVAL/INSTALLATION.)
3. Remove in the order indicated in the table.
4. Install in the reverse order of removal.

1	Knob
2	Nut
3	Washer
4	Fan switch

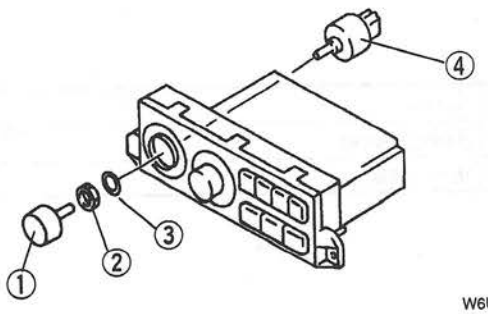

W6U740WAZ

HEATER CONTROL UNIT BULB REMOVAL/INSTALLATION

W6U740W22

1. Disconnect the negative battery cable.
2. Remove the heater control unit. (Refer to 07–40 HEATER CONTROL UNIT REMOVAL/INSTALLATION.)
3. Remove the heater control unit bulb.
4. Install in the reverse order of removal.

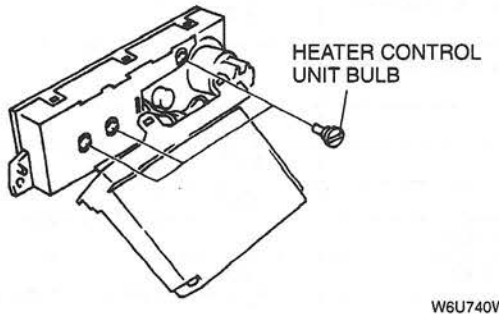

W6U740WB0

SWING LOUVER INSPECTION

W6U740W23

1. Remove the meter hood. (Refer to 09–17 METER HOOD REMOVAL/INSTALLATION.)
2. Connect battery positive voltage to terminal B and ground to terminal A of the swing louver.
3. Verify that the swing louver operates as indicated below.

Swing louver switch position	Swing louver
Off	Stopped
On	Operation

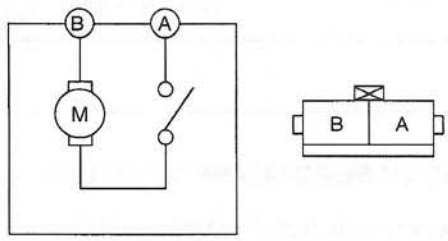

W6U740WB1

4. If not as specified, replace the swing louver.

SWING LOUVER REMOVAL/INSTALLATION

W6U740W24

1. Disconnect the negative battery cable.
2. Remove the meter hood. (Refer to 09–17 METER HOOD REMOVAL/INSTALLATION.)
3. Remove in the order indicated in the table.
4. Install in the reverse order of removal.

1	Screw
2	Swing louver
3	Vent grille

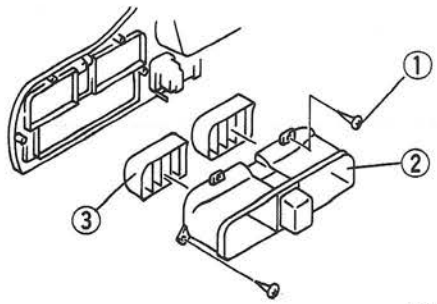

W6U740WB2

PRESSURE RELIEF VALVE INSPECTION

W6U740W15

1. Install the manifold gauge set.
2. Start the engine.
3. Turn the fan switch and A/C switch on.
4. Verify the high-pressure side reading of the manifold gauge.
5. Check for leaks from the pressure relief valve by using a gas leak tester.

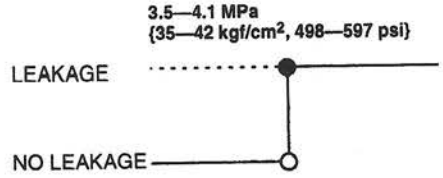

W6U740WAP

6. If not as specified, replace the cooler hose (HI).

07–50 TECHNICAL DATA

07 HVAC 07–50–1

07 HVAC

W6U750W01

Item			Specification
Refrigerant	Type		R-134a
	Regular amount	(g {oz})	750 {26.5}
A/C compressor	Lube oil	Type	SP-20
		Sealed volume (ml {cc, fl oz})	240 {240, 8.11}
	Magnetic clutch clearance	(mm {in})	0.35—0.65 {0.014—0.025}

RESTRAINTS

08 SECTION

TROUBLESHOOTING [AIR BAG SYSTEM] 08–01A
TROUBLESHOOTING [SEAT BELT] 08–01B
AIR BAG SYSTEM 08–10
SEAT BELT 08–11
SERVICE TOOLS 08–60

08–01A TROUBLESHOOTING [AIR BAG SYSTEM]

FOREWORD 08–01A–1
Flowchart 08–01A–1
AIR BAG SYSTEM ON-BOARD DIAGNOSIS 08–01A–2
Diagnostic Trouble Code Table 08–01A–2
Inspection of Diagnostic Trouble Codes 08–01A–3
AIR BAG SYSTEM SYMPTOM TROUBLESHOOTING 08–01A–10
Foreword 08–01A–10
Diagnostic Index 08–01A–10
Symptom Troubleshooting 08–01A–10

FOREWORD

W6U801W01

- Use the following flowchart to verify the cause of the trouble.

Flowchart

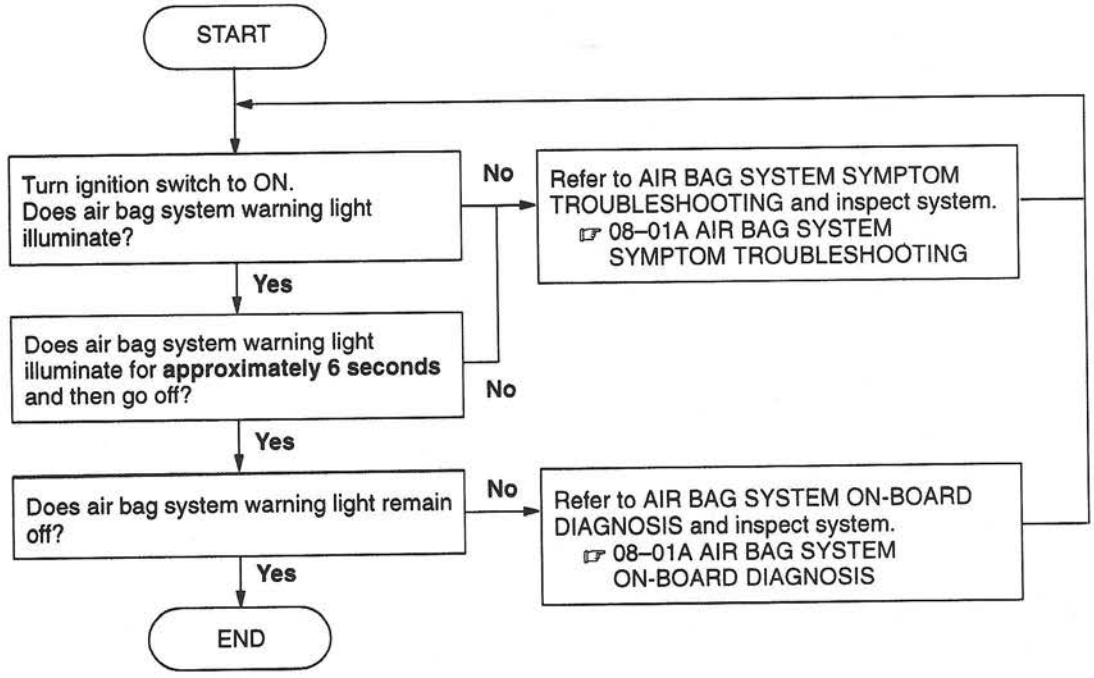

W6U801WA0

AIR BAG SYSTEM ON-BOARD DIAGNOSIS

W6U801W02

Diagnostic Trouble Code Table

DTC	Output signal	Malfunction location
1	 W6U801WA1	SAS unit connector poor connection
2	 W6U801WA2	SAS unit
3	 W6U801WA3	Battery
6	 W6U801WA4	Driver-side air bag module
7	 W6U801WA5	Passenger-side air bag module
—	Continuously flashes	Deployment authorization standby code (see below).

Caution

- **When the output pattern continuously flashes (standby code), perform deployment authorization procedures. (Refer to 08–10 AIR BAG MODULES DEPLOYMENT AUTHORIZATION PROCEDURES.)**

Inspection of Diagnostic Trouble Codes

DTC 1	SAS unit connector poor connection
DETECTION CONDITION	No continuity between poor connection detector bar of SAS unit.
POSSIBLE CAUSE	• SAS unit connector malfunction • Poor connection

STEP	INSPECTION		ACTION
1	**Warning** • **Handling the SAS unit improperly can accidently deploy the air bag modules which may cause serious injury. Read AIR BAG SYSTEM SERVICE WARNINGS before handling the SAS unit.** ☞ **08–10 AIR BAG SYSTEM SERVICE WARNINGS** Turn ignition switch to LOCK. Disconnect negative battery cable and wait for **more than 1 minute** to allow the backup power supply of SAS unit to deplete its stored power. Remove rear console. ☞ 09–17 REAR CONSOLE REMOVAL/INSTALLATION Remove driver-side side wall. Is SAS unit connector securely connected? 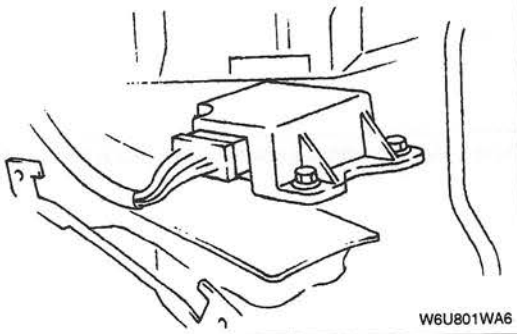 W6U801WA6	Yes	Go to next step.
		No	Connect connector properly.
2	Disconnect SAS unit connector. Is SAS unit connector okay?	Yes	Replace SAS unit. ☞ 08–10 SAS UNIT REMOVAL/INSTALLATION
		No	Replace dash harness of air bag system.

DTC 2	SAS unit
DETECTION CONDITION	Malfunction in SAS unit circuit.
POSSIBLE CAUSE	• SAS unit malfunction

STEP	INSPECTION		ACTION
—	—	—	Replace SAS unit. ☞ 08–10 SAS UNIT REMOVAL/INSTALLATION

DTC 3	Battery
DETECTION CONDITION	Voltage supplied to SAS unit is less than 9 V.
POSSIBLE CAUSE	**Note** • Diagnostic trouble code 3 is indicated when the voltage simultaneously drops in the harness of both of the following circuits. 1. Harness between terminal A of joint box connector (JB–08) and terminal AB of SAS unit connector. 2. Harness between terminal K of joint box connector (JB–07) and terminal Z of SAS unit connector. • Battery malfunction • Malfunction in wiring harness between battery and joint box

STEP	INSPECTION		ACTION
1	**Warning** • **Handling the SAS unit improperly can accidently deploy the air bag modules which may cause serious injury. Read AIR BAG SYSTEM SERVICE WARNINGS, before handling the SAS unit.** ☞ **08–10 AIR BAG SYSTEM SERVICE WARNINGS** Is battery voltage **more than 9 V**?	Yes	Go to next step.
		No	Battery is weak. Inspect engine charging system. ☞ 01–01 ENGINE SYMPTOM TROUBLESHOOTING
2	Remove driver-side front scuff plate. Remove driver-side front side trim. Remove joint box without disconnecting connector. Turn ignition switch to ON. Measure voltage at terminal A (JB–08) or K (JB–07) at joint box connector of wiring harness. Is voltage **more than 9 V**? 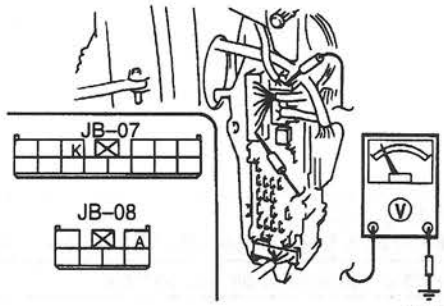 W6U801WA8	Yes	Go to next step.
		No	Repair wiring harness between fuse block and joint box.

STEP	INSPECTION		ACTION
3	Turn ignition switch to LOCK. Disconnect negative battery cable and wait for **more than 1 minute** to allow the backup power supply of SAS unit to deplete its stored power. Disconnect clock spring connector. Remove glove compartment. Disconnect passenger-side air bag module connector. Disconnect SAS unit connector. Connect negative battery cable. Turn ignition switch to ON. Measure voltage at terminal AB or Z at SAS unit connector of wiring harness. Is voltage **more than 9 V**? 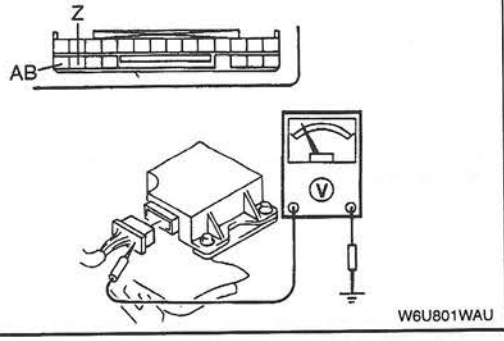	Yes	Replace SAS unit. ☞ 08–10 SAS UNIT REMOVAL/INSTALLATION
		No	Replace or repair wiring harness between joint box and SAS unit.

DTC 6	Driver-side air bag module
DETECTION CONDITION	Resistance detected between terminals M–O of SAS unit is other than 2 Ω.
POSSIBLE CAUSE	• Driver-side air bag module malfunction • Clock spring malfunction • Malfunction in wiring harness between SAS unit and driver-side air bag module

STEP	INSPECTION		ACTION
1	**Warning** • **Handling the air bag module and SAS unit improperly can accidently deploy the air bag modules which may cause serious injury. Read AIR BAG SYSTEM SERVICE WARNINGS before handling the air bag module and SAS unit.** **☞ 08–10 AIR BAG SYSTEM SERVICE WARNINGS** Turn ignition switch to LOCK. Disconnect negative battery cable and wait for **more than 1 minute** to allow the backup power supply of SAS unit to deplete its stored power. Remove driver-side air bag module. ☞ 08–10 DRIVER-SIDE AIR BAG MODULE REMOVAL/INSTALLATION Is clock spring pin okay? 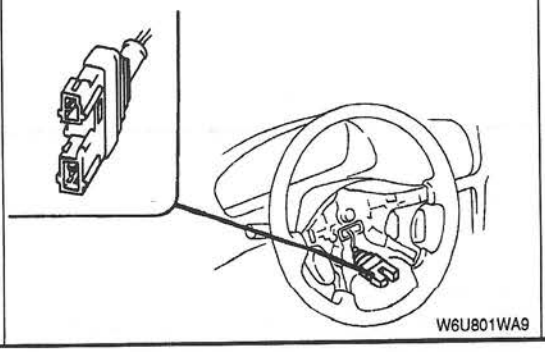	Yes	Go to next step.
		No	Replace clock spring. ☞ 08–10 CLOCK SPRING REMOVAL/INSTALLATION

STEP	INSPECTION		ACTION
2	Connect leads of **SST** (Fuel And Thermometer checker) to terminals 3B and 3C of clock spring. Set resistance of **SST** (Fuel And Thermometer checker) to **2 ohms**. Connect negative battery cable. Is DTC 6 indicated when ignition switch is turned to ON? 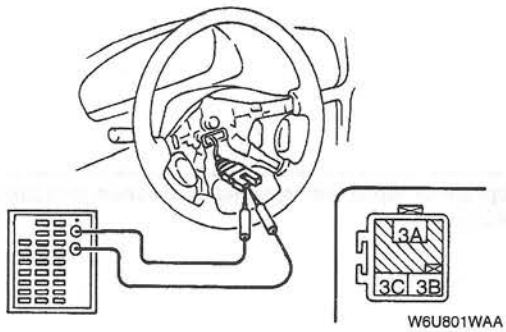 W6U801WAA	Yes	Go to next step.
		No	Replace driver-side air bag module. ☞ 08–10 DRIVER-SIDE AIR BAG MODULE REMOVAL/INSTALLATION
3	Turn ignition switch to LOCK. Disconnect negative battery cable and wait for **more than 1 minute** to allow backup power supply of SAS unit to deplete its stored power. Disconnect clock spring connector. Is clock spring connector pin okay? 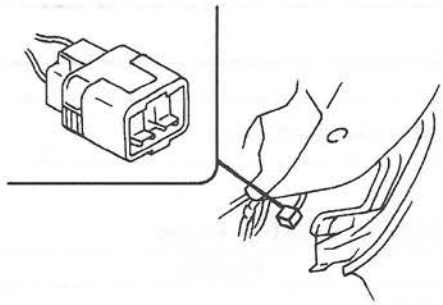 W6U801WAB	Yes	Go to next step.
		No	Replace dash harness of air bag system.
4	Connect leads of **SST** (Fuel And Thermometer checker) to terminals A and B of the clock spring connector. Set resistance of **SST** (Fuel And Thermometer checker) to **2 ohms**. Connect negative battery cable. Is DTC 6 indicated when ignition switch is turned to ON? 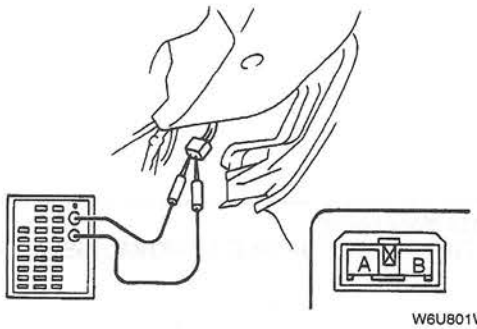 W6U801WAC	Yes	Go to next step.
		No	Replace clock spring. ☞ 08–10 CLOCK SPRING REMOVAL/INSTALLATION

STEP	INSPECTION		ACTION
5	Turn ignition switch to LOCK. Disconnect negative battery cable and wait for **more than 1 minute** to allow backup power supply of SAS unit to deplete its stored power. Remove glove compartment. Disconnect passenger-side air bag module connector. Remove rear console. ☞ 09–17 REAR CONSOLE REMOVAL/INSTALLATION Remove driver-side side wall. Disconnect SAS unit connector. Inspect wiring harness between terminal O of SAS unit connector and terminal A of clock spring connector and between terminal M of SAS unit connector and terminal B of clock spring connector for following: • Short to ground • Short to power supply • Open circuit Is wiring harness okay? 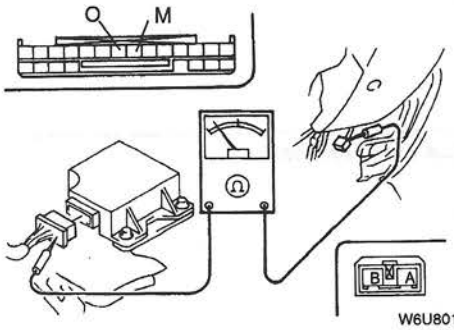 W6U801WAD	Yes	Replace SAS unit. ☞ 08–10 SAS UNIT REMOVAL/INSTALLATION
		No	Replace dash harness of air bag system.

DTC 7	Passenger-side air bag module
DETECTION CONDITION	Resistance detected between terminals I–K of SAS unit is other than 2 Ω.
POSSIBLE CAUSE	• Passenger-side air bag module malfunction • Malfunction in wiring harness between SAS unit and passenger-side air bag module

STEP	INSPECTION		ACTION
1	**Warning** • **Handling the air bag module and SAS unit improperly can accidently deploy the air bag modules which may cause serious injury. Read AIR BAG SYSTEM SERVICE WARNINGS, before handling the air bag module and SAS unit.** ☞ **08–10 AIR BAG SYSTEM SERVICE WARNINGS** Turn ignition switch to LOCK. Disconnect negative battery cable and wait for **more than 1 minute** to allow backup power supply of SAS unit to deplete its stored power. Remove glove compartment. Disconnect passenger-side air bag module connector. Is passenger-side air bag module connector pin okay? 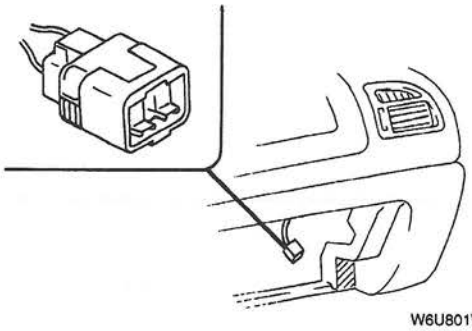 W6U801WAE	Yes	Go to next step.
		No	Replace wiring harness.
2	Connect leads of **SST** (Fuel And Thermometer checker) to terminals A and B of the passenger-side air bag module connector. Set resistance of **SST** (Fuel And Thermometer checker) to **2 ohms**. Connect negative battery cable. Is DTC 7 indicated when ignition switch is turned to ON? 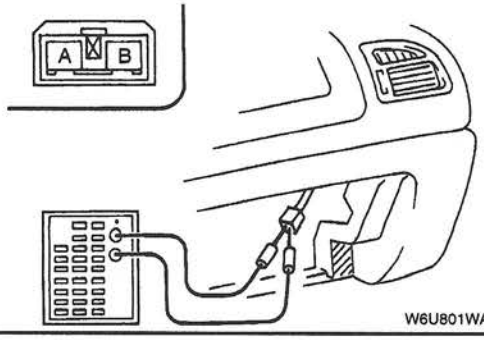 W6U801WAF	Yes	Go to next step.
		No	Replace passenger-side air bag module. ☞ 08–10 PASSENGER-SIDE AIR BAG MODULE REMOVAL/INSTALLATION

STEP	INSPECTION		ACTION
3	Turn ignition switch to LOCK. Disconnect negative battery cable and wait for **more than 1 minute** to allow backup power supply of SAS unit to deplete its stored power. Disconnect clock spring connector. Remove rear console. ☞ 09–17 REAR CONSOLE REMOVAL/INSTALLATION Remove driver-side side wall. Disconnect SAS unit connector. Inspect wiring harness between terminal K of SAS unit connector and terminal A of passenger-side air bag module connector and between terminal I of SAS unit connector and terminal B of passenger-side air bag module connector for following: • Short to ground • Short to power supply • Open circuit Is wiring harness okay? 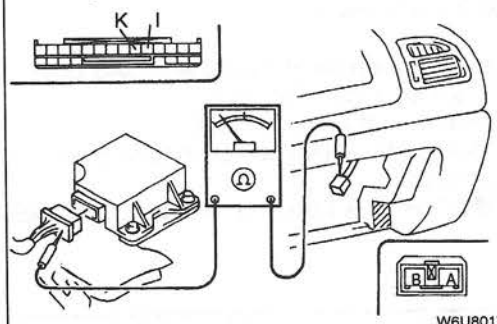 W6U801WAG	Yes	Replace SAS unit. ☞ 08–10 SAS UNIT REMOVAL/INSTALLATION
		No	Replace dash harness of air bag system.

AIR BAG SYSTEM SYMPTOM TROUBLESHOOTING

W6U801W03

Foreword

- Refer to 00–00 GENERAL INFORMATION and thoroughly read and understand the basic flow of troubleshooting to properly perform the procedures.
- For the steps which have an asterisk (*), shake the appropriate wiring harness while performing the inspection. (The cause of the malfunction may be a poor connection of the connector or terminal.)

Diagnostic Index

- To diagnose the appropriate area, use the chart below to verify the symptoms.

No.	Malfunction symptom
1	Air bag system warning light does not illuminate when ignition switch is turned to ON
2	Air bag system warning light illuminates immediately after ignition switch is turned to ON and remains illuminated

Symptom Troubleshooting

Note

- If symptom still exists after performing troubleshooting, check the following:

1. Poor contact at terminal B of short connector (4-pin) between instrument cluster and SAS unit
2. Simultaneous poor contact at terminals S and X of SAS unit connector (21-pin)
3. Simultaneous poor contact at terminals AB and Z of SAS unit connector (21-pin)
4. Simultaneous poor contact in wiring harness between terminal S of SAS unit connector (21-pin) and ground terminal X of SAS unit connector (21-pin) and ground
5. Simultaneous poor contact in wiring harness between METER 10 A fuse and SAS unit, ENGINE 10 A fuse and SAS unit

1	Air bag system warning light does not illuminate when ignition switch is turned to ON		
TROUBLESHOOTING HINTS Malfunction in air bag system warning light circuit ① Air bag system warning light does not illuminate • SAS unit malfunction • Instrument cluster (print plate No.1) malfunction • Terminal 1I of instrument cluster connector (12-pin) malfunction • Terminal Q of SAS unit connector (21-pin) malfunction • Air bag system warning light bulb malfunction • Loose air bag system warning light bulb • Poor connection at terminal 1I of instrument cluster connector (12-pin) • Poor connection at terminal Q of SAS unit connector (21-pin) • Poor contact of instrument cluster connector • Malfunction in wiring harness between instrument cluster and SAS unit			
STEP	**INSPECTION**		**ACTION**
1	Is instrument cluster connector (12-pin) securely connected?	Yes	Go to next step.
		No	Reconnect connector properly. Go to step 10.
2	Is air bag system warning light bulb securely installed?	Yes	Go to next step.
		No	Reinstall properly, then go to step 10.
3	Is air bag system warning light bulb okay?	Yes	Reinstall properly, then go to step 10.
		No	Replace air bag system warning light bulb, then go to step 10.

STEP	INSPECTION		ACTION
4	Is terminal 1I of instrument cluster connector (12-pin) securely connected with connector? 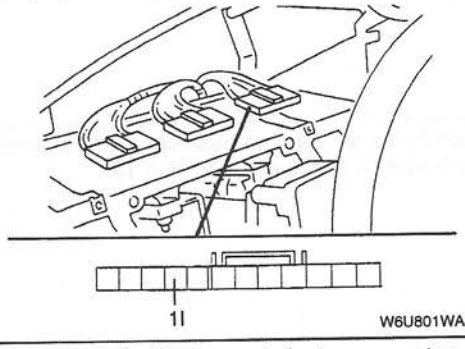 W6U801WAJ	Yes	Go to next step.
		No	Reconnect properly, then go to step 10.
5	Is terminal 1I of instrument cluster connector (12-pin) damaged?	Yes	Repair or replace terminal, then go to step 10.
		No	Go to next step.
6	Check for continuity between terminal 1I and 3N at print plate No.1 of instrument cluster. Is there continuity? 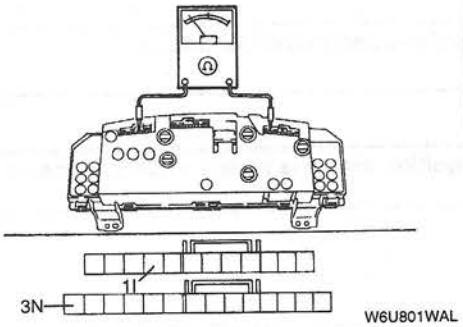 W6U801WAL	Yes	Go to next step.
		No	Replace print plate No.1, then go to step 10.
7	Turn ignition switch to LOCK. Disconnect negative battery cable and wait for **more than 1 minute** to allow the backup power supply of SAS unit to deplete its stored power. Remove the driver-side side wall. Is terminal Q of SAS unit connector (21-pin) securely connected with connector? 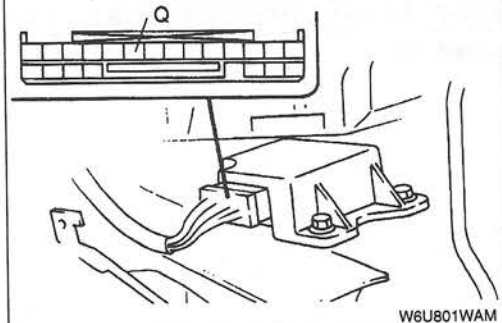 W6U801WAM	Yes	Go to next step.
		No	Reconnect properly, then go to step 10.
8	Is terminal Q of SAS unit connector (21-pin) damaged?	Yes	Repair or replace terminal, then go to step 10.
		No	Go to next step.

STEP	INSPECTION		ACTION
9*	Disconnect SAS unit connector (21-pin) and instrument cluster connector (12-pin). Check for continuity between terminal Q at SAS unit connector (21-pin) of wiring harness and terminal 1I at instrument cluster connector (12-pin) of wiring harness. Is there continuity? 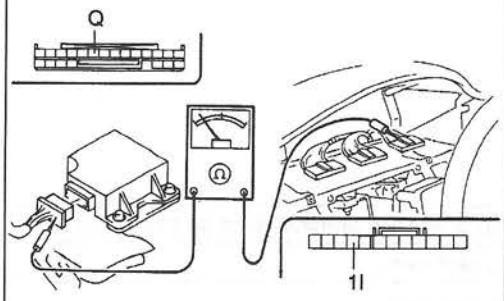 W6U801WAV	Yes	Replace SAS unit, then go to step 10. ☞ 08–10 SAS UNIT REMOVAL/INSTALLATION
		No	Replace or repair wiring harness between instrument cluster and SAS unit, then go to step 10.
10	Connect SAS unit connector. Connect instrument cluster connector. Connect negative battery cable. When turning ignition switch to ON, does air bag system warning light operate properly?	Yes	Troubleshooting completed.
		No	Reconfirm symptoms of malfunction.

2	**Air bag system warning light illuminates immediately after ignition switch is turned to ON and remains illuminated**

TROUBLESHOOTING HINTS

Malfunction in air bag system warning light circuit

① Air bag system warning light remains illuminated

- SAS unit malfunction
- Malfunction in short bar between terminal Q of SAS unit connector (21-pin) and terminal S of SAS unit connector (21-pin)
- Battery malfunction or battery charge/discharge system malfunction
- Poor connection of SAS unit connector (21-pin)
- Malfunction in wiring harness between instrument cluster and SAS unit

STEP	INSPECTION		ACTION
1	Measure battery positive voltage. Is voltage **more than 9 V**?	Yes	Go to next step.
		No	Inspect engine charging system. ☞ 01–01 ENGINE SYMPTOM TROUBLESHOOTING
2	Turn ignition switch to LOCK. Disconnect negative battery cable and wait for **more than 1 minute** to allow the backup power supply of SAS unit to deplete its stored power. Remove rear console. ☞ 09–17 REAR CONSOLE REMOVAL/INSTALLATION Remove the driver-side side wall. Is terminal Q of SAS unit connector (21-pin) securely connected with connector? 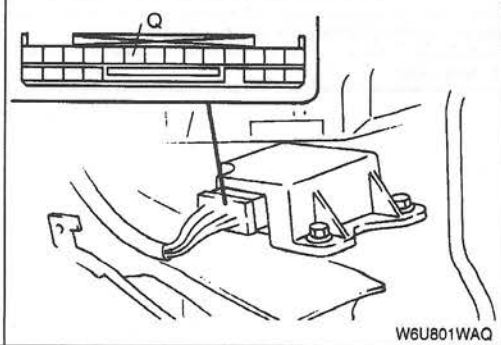 W6U801WAQ	Yes	Go to next step.
		No	Reconnect properly, then go to step 6.

STEP	INSPECTION		ACTION
3	Is short bar between terminal Q of SAS unit (21-pin) and terminal S of SAS unit (21-pin) damaged? 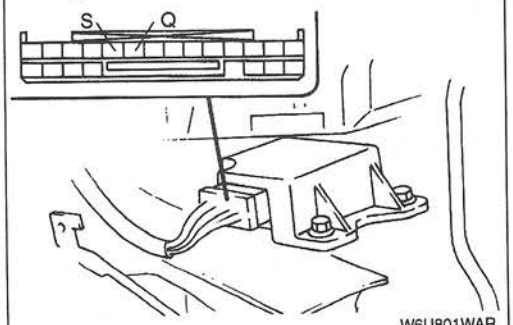 W6U801WAR	Yes	Replace dash harness, then go to step 6.
		No	Go to next step.
4	Is hook that activates SAS unit connector short bar okay? 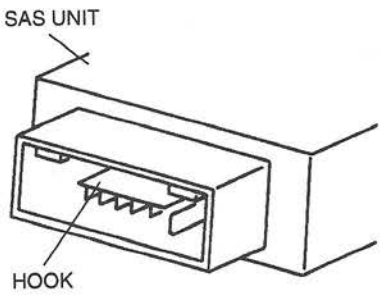 W6U801WAS	Yes	Go to next step.
		No	Replace SAS unit, then go to step 6. ☞ 08–10 SAS UNIT REMOVAL/INSTALLATION
5*	Disconnect SAS unit connector (21-pin) and instrument cluster connector (12-pin). Insert insulative material between terminals Q and S of SAS unit connector (21-pin) so short bar cannot operate. Check for continuity between terminal Q at SAS unit connector (21-pin) of wiring harness and ground. Is there continuity? 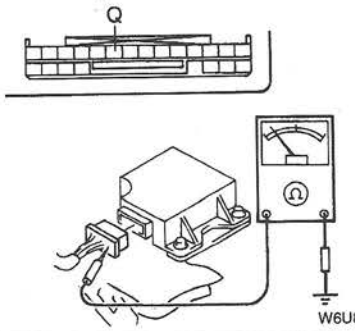 W6U801WAT	Yes	Replace or repair wiring harness between instrument cluster and SAS unit, then go to next step.
		No	Replace SAS unit, then go to next step. ☞ 08–10 SAS UNIT REMOVAL/INSTALLATION
6	Connect SAS unit connector. Connect instrument cluster connector. Connect negative battery cable. When turning ignition switch to ON, does air bag system warning light operate properly?	Yes	Troubleshooting completed.
		No	Reconfirm symptoms of malfunction.

08–01B TROUBLESHOOTING [SEAT BELT]

FOREWORD 08–01B–1
SEAT BELT SYMPTOM TROUBLESHOOTING 08–01B–1
Diagnostic Index 08–01B–1
Symptom Troubleshooting 08–01B–1

FOREWORD

W6U801W06

- Refer to 00–00 GENERAL INFORMATION and thoroughly read and understand the basic flow of troubleshooting to properly perform the procedures.

SEAT BELT SYMPTOM TROUBLESHOOTING

W6U801W07

Diagnostic Index

- Use the chart below to verify the symptoms of the trouble in order to diagnose the appropriate area.

No.	Malfunction symptom
1	Seat belt warning light and buzzer do not operate
2	Seat belt warning buzzer sounds but warning light does not illuminate
3	Seat belt warning light illuminates but warning buzzer does not sound
4	Seat belt warning buzzer sounds for 4 to 8 seconds after ignition switch is turned to ON (belt is fastened)

Symptom Troubleshooting

1 Seat belt warning light and buzzer do not operate

TROUBLESHOOTING HINTS
Malfunction in seat belt warning light and buzzer input signal circuit
① Seat belt warning light and buzzer do not operate
- Buckle switch malfunction
- Malfunction in wiring harness between instrument cluster, CPU and buckle switch
- Malfunction in wiring harness between buckle switch and ground

Malfunction in instrument cluster power supply circuit
① Seat belt warning light and buzzer do not operate
- Malfunction in wiring harness between METER 10 A fuse and instrument cluster
- METER 10 A fuse malfunction

STEP	INSPECTION		ACTION
1	Inspect buckle switch. ☞ 08–11 BUCKLE SWITCH INSPECTION Is buckle switch okay?	Yes	Go to next step.
		No	Replace driver-side front buckle.
2	Check for continuity between terminal D (Manual seat: B) at buckle switch connector and ground. Is there continuity? 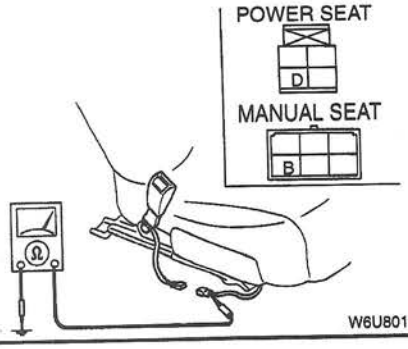	Yes	Go to next step.
		No	Repair wiring harness between buckle switch and ground.

STEP	INSPECTION		ACTION
3	Are other warning lights illuminated with ignition switch ON?	Yes	Repair wiring harness between instrument cluster, CPU and buckle switch.
		No	Inspect instrument cluster power supply. ☞ 09–01P INSTRUMENTATION/DRIVER INFO. SYMPTOM TROUBLESHOOTING, Diagnostic Index No.8

2	**Seat belt warning buzzer sounds, but warning light does not illuminate**

TROUBLESHOOTING HINTS

Malfunction in seat belt warning light input signal circuit

① Seat belt warning light does not illuminate
- Seat belt warning light bulb malfunction
- Instrument cluster (print plate No.1) malfunction
- Malfunction in wiring harness between instrument cluster and buckle switch

Malfunction in instrument cluster power supply circuit

① Seat belt warning light does not illuminate
- Malfunction in wiring harness between METER 10 A fuse and instrument cluster

STEP	INSPECTION		ACTION
1	Are other warning lights illuminated with ignition switch ON?	Yes	Go to next step.
		No	Inspect instrument cluster power supply. ☞ 09–01P INSTRUMENTATION/DRIVER INFO. SYMPTOM TROUBLESHOOTING, Diagnostic Index No.8
2	Remove the instrument cluster. Remove and check the seat belt warning light bulb. Is seat belt warning light bulb okay?	Yes	Go to next step.
		No	Replace seat belt warning light bulb.
3	Disconnect buckle switch connector. Check for continuity between terminal 1F at instrument cluster connector and terminal C at buckle switch connector. Is there continuity? 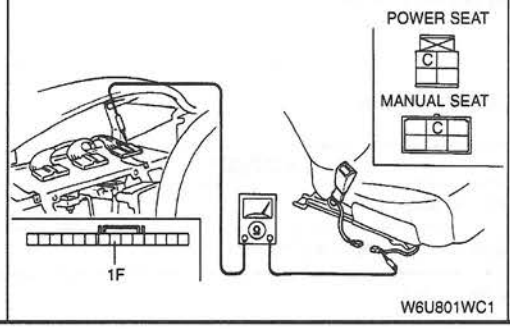 	Yes	Replace print plate No.1. ☞ 09–22 INSTRUMENT CLUSTER DISASSEMBLY/ASSEMBLY
		No	Repair wiring harness between instrument cluster and buckle switch.

3	Seat belt warning light illuminates but warning buzzer does not sound

TROUBLESHOOTING HINTS

Malfunction in seat belt warning buzzer input signal circuit

① Seat belt warning buzzer does not sound
- CPU malfunction
- Malfunction in wiring harness between CPU and buckle switch

Malfunction in CPU power supply/ground circuit

① Seat belt warning buzzer does not sound
- Malfunction in wiring harness between METER 10 A fuse and CPU
- Malfunction in wiring harness between ROOM 15 A fuse and CPU
- Malfunction in wiring harness between CPU and ground
- ROOM 15 A fuse malfunction

STEP	INSPECTION		ACTION
1	Is ROOM 15 A fuse okay?	Yes	Go to next step.
		No	Replace fuse after repairing wiring harness.
2	Has seat belt warning buzzer sounded for **4 to 8 seconds** since turning ignition switch to ON?	Yes	Seat belt warning system is okay.
		No	Go to next step.
3	Disconnect negative battery cable. Remove driver's side front scuff plate. Remove driver's side front side trim. Remove nuts fixed in joint box and remove CPU from joint box. Connect negative battery cable. Turn ignition switch to ON. Measure voltage at terminal 1M at joint box of wiring harness. Is voltage **B+**? 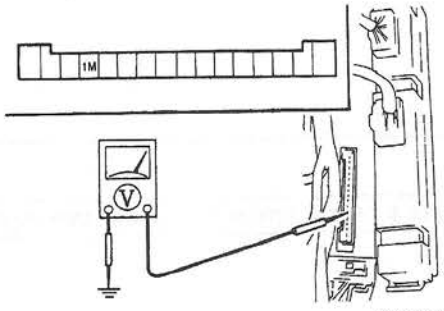 W6U801WC3	Yes	Go to next step.
		No	Repair wiring harness between METER 10 A fuse and CPU.
4	Measure voltage at terminal 1J at joint box of wiring harness. Is voltage **B+**? 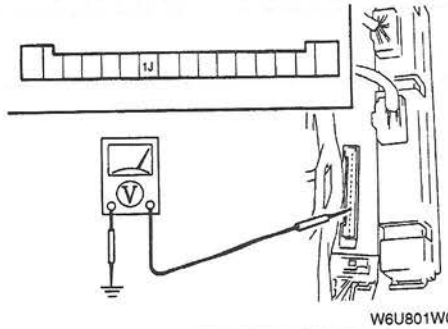 W6U801WC4	Yes	Go to next step.
		No	Repair wiring harness between ROOM 15 A fuse and joint box.

STEP	INSPECTION		ACTION
5	Disconnect negative battery cable. Check for continuity between terminal 1G at joint box of wiring harness and ground. Is there continuity? 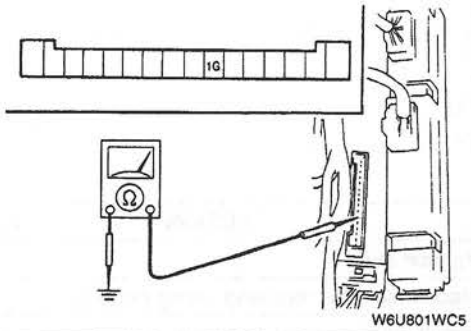 W6U801WC5	Yes	Go to next step.
		No	Repair wiring harness between joint box and ground.
6	Disconnect buckle switch connector. Check for continuity between terminal 1O at joint box and terminal C at buckle switch connector. Is there continuity? 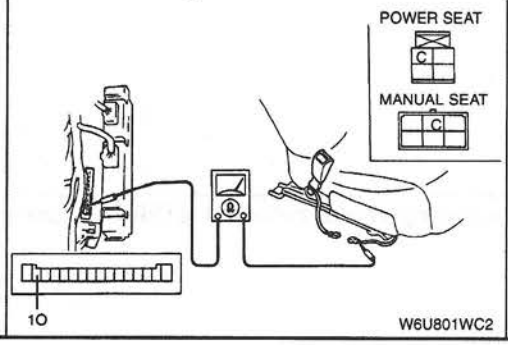 W6U801WC2	Yes	Replace CPU. ☞ 09–40 CPU REMOVAL/INSTALLATION
		No	Repair wiring harness between CPU and buckle switch.

4	**Seat belt warning buzzer sounds for 4 to 8 seconds after ignition switch is turned to ON (belt fastened)**		
TROUBLESHOOTING HINTS Malfunction in seat belt warning buzzer input signal circuit ① Warning buzzer sounds for 4 to 8 seconds when seat belt is fastened • CPU malfunction			
STEP	**INSPECTION**		**ACTION**
—	—	—	Replace CPU. ☞ 09–40 CPU REMOVAL/INSTALLATION

08–10 AIR BAG SYSTEM

AIR BAG SYSTEM SERVICE WARNINGS 08–10–1
Component Disassembly 08–10–1
Wiring Harness Repair 08–10–1
Air Bag Module Inspection 08–10–1
Air Bag Module Handling 08–10–1
SAS Unit Handling 08–10–2
DRIVER-SIDE AIR BAG MODULE REMOVAL/INSTALLATION 08–10–2
Bolt Installation Note 08–10–3
PASSENGER-SIDE AIR BAG MODULE REMOVAL/INSTALLATION 08–10–3
CLOCK SPRING ADJUSTMENT 08–10–3
CLOCK SPRING INSPECTION 08–10–4
CLOCK SPRING REMOVAL/INSTALLATION 08–10–5
SAS UNIT REMOVAL/INSTALLATION . 08–10–5
Nut Installation Note 08–10–6
SAS UNIT BRACKET REMOVAL/INSTALLATION 08–10–6
AIR BAG MODULES DEPLOYMENT AUTHORIZATION PROCEDURES 08–10–6
AIR BAG MODULES DEPLOYMENT PROCEDURES 08–10–7
Deployment Procedures for Inside of Vehicle 08–10–7
Deployment Procedures for Outside of Vehicle 08–10–7
AIR BAG MODULES DISPOSAL PROCEDURES 08–10–10
INSPECTION OF SST (DEPLOYMENT TOOL) 08–10–10
Inspection Procedure 08–10–11

AIR BAG SYSTEM SERVICE WARNINGS

W6U810W01

Component Disassembly

- **Disassembling and reassembling air bag system components can render the system inoperative which may result in serious injury or death in the event of an accident. Do not disassemble any air bag system component.**

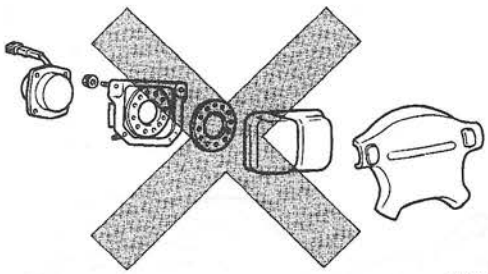

W6U810WA0

Wiring Harness Repair

- **Incorrectly repairing an air bag system wiring harness can accidently deploy the air bag module which may cause serious injury. If a problem is found in the system wiring, replace the wiring harness. Do not try to repair it.**

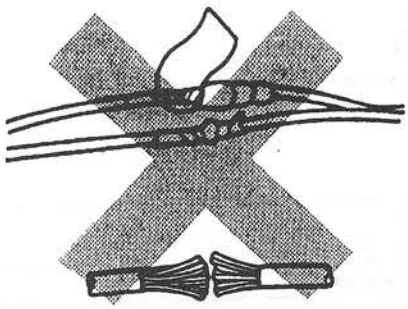

W6U810WA1

Air Bag Module Inspection

- **Inspecting the air bag module by using an ohmmeter can deploy the air bag module which may cause serious injury. Do not use an ohmmeter to inspect the air bag module.**

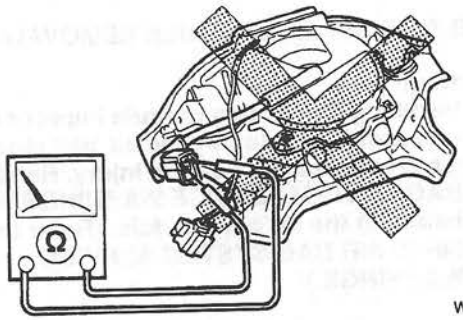

W6U810WA2

Air Bag Module Handling

- **A live (undeployed) air bag module may accidently deploy when it is handled and cause serious injury. When carrying a live air bag module, point the front surface away from your body to lessen the chance of injury in case it deploys.**

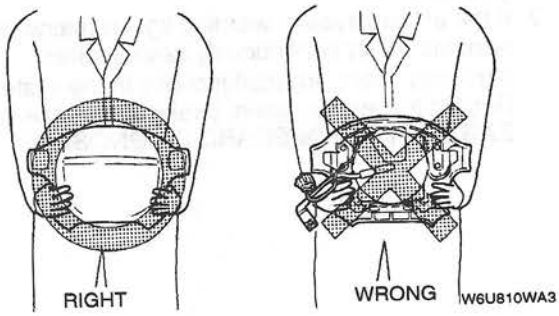

W6U810WA3

- **A live air bag module placed face down on a surface is dangerous. If the air bag module deploys, the motion of the module can cause serious injury. Always face the front surface up to reduce the motion of the module in case it accidently deploys.**

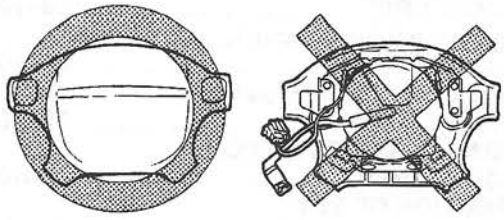

RIGHT WRONG

W6U810WA4

SAS Unit Handling

- **Installing a connected SAS unit is dangerous. Movement generated during installation can cause the crash sensor inside the unit to send an electrical signal to the air bag modules. This will deploy the air bag modules, which may result in serious injury. Therefore, before connecting the SAS unit, firmly mount the unit to the vehicle.**
- **Disconnecting the SAS unit connector or removing the SAS unit with the ignition switch ON can cause the air bag modules to deploy, which may seriously injure you. Before disconnecting the SAS unit connector or removing the SAS unit, turn the ignition switch to LOCK, then disconnect the negative battery cable and wait for more than 1 minute to allow the backup power supply of the SAS unit to deplete its stored power.**
- **Once an air bag is deployed due to an accident or other causes, the SAS unit must be replaced with a new one even if the used one does not have any external signs of damage. The used SAS unit may have been damaged internally which may cause improper operation, resulting in major injuries or even death. The used SAS unit cannot be bench-checked or self-checked.**

DRIVER-SIDE AIR BAG MODULE REMOVAL/INSTALLATION

W6U810W02

Warning

- **Handling the air bag module improperly can accidently deploy the air bag module which may cause serious injury. Read AIR BAG SYSTEM SERVICE WARNINGS before handling the air bag module. (Refer to 08–10 AIR BAG SYSTEM SERVICE WARNINGS.)**

1. Turn the ignition switch to LOCK.
2. Disconnect the negative battery cable and wait for more than **1 minute** to allow the backup power supply of the SAS unit to deplete its stored power.
3. Remove in the order indicated in the table.
4. Install in the reverse order of removal.
5. Turn the ignition switch to ON.
6. Verify that the air bag system warning light illuminates for **approximately 6 seconds** then goes off.
7. If the air bag system warning light remains on, remains off, or continuously flashes after servicing, there are malfunctions in the system. Repeat inspection again. (Refer to 08–01A AIR BAG SYSTEM ON-BOARD DIAGNOSIS.)

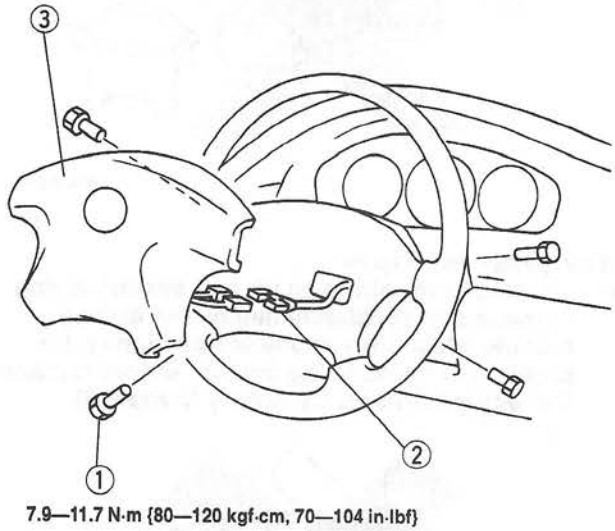

7.9—11.7 N·m {80—120 kgf·cm, 70—104 in·lbf}

W6U810WA5

1	Bolt ☞ Installation Note
2	Connector
3	Driver-side air bag module

Bolt Installation Note
- Tighten the bolts in the order shown in the figure.

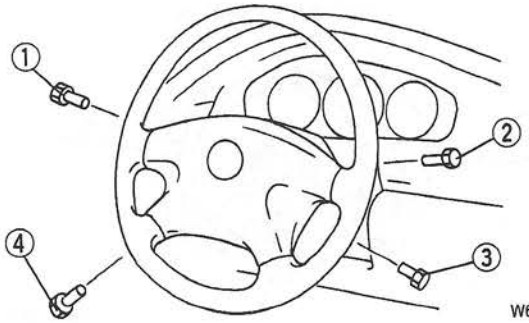

W6U810WA7

PASSENGER-SIDE AIR BAG MODULE REMOVAL/INSTALLATION

W6U810W03

Warning
- **Handling the air bag module improperly can accidently deploy the air bag module which may cause serious injury. Read AIR BAG SYSTEM SERVICE WARNINGS before handling the air bag module. (Refer to 08–10 AIR BAG SYSTEM SERVICE WARNINGS.)**

1. Turn the ignition switch to LOCK.
2. Disconnect the negative battery cable and wait for more than **1 minute** to allow the backup power supply of the SAS unit to deplete its stored power.
3. Remove the glove compartment.
4. Remove in the order indicated in the table.
5. Install in the reverse order of removal.
6. Turn the ignition switch to ON.
7. Verify that the air bag system warning light illuminates for **approximately 6 seconds** then goes off.
8. If the air bag system warning light remains on, remains off, or continuously flashes after service, there are malfunctions in the system. Repeat inspection again. (Refer to 08–01A AIR BAG SYSTEM ON-BOARD DIAGNOSIS.)

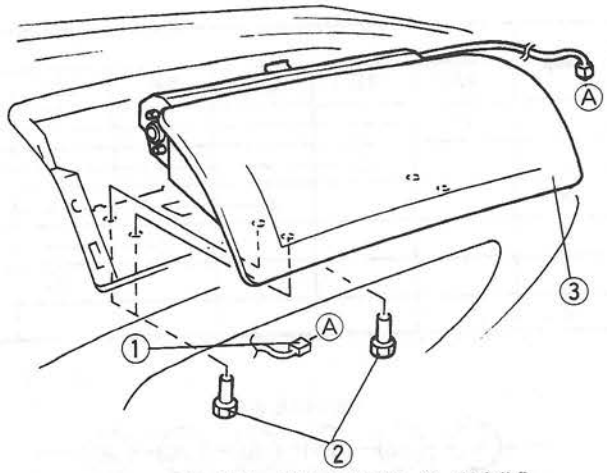

18—26 N·m {1.8—2.7 kgf·m, 14—19 ft·lbf}

W6U810WA8

1	Connector
2	Bolt
3	Passenger-side air bag module

CLOCK SPRING ADJUSTMENT

W6U810W04

1. Set the front wheels straight ahead.

Caution
- **The clock spring will break if overwound. Do not force the clock spring when turning it.**

2. Turn the clock spring clockwise until it stops.

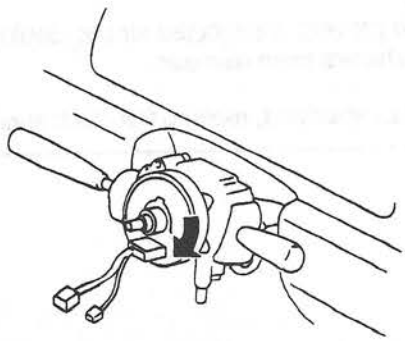
W6U810WAB

3. Turn the clock spring counterclockwise **2.75 turns**.

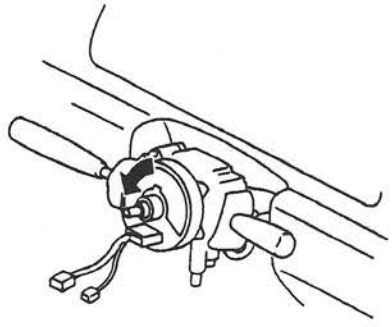

W6U810WAC

4. Align the mark on the clock spring with the mark on the outer housing.

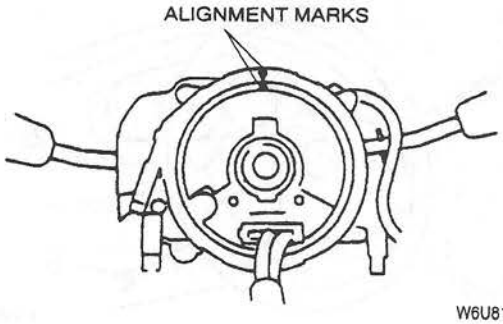

W6U810WAD

CLOCK SPRING INSPECTION

W6U810W05

1. Remove the driver-side air bag module. (Refer to 08–10 DRIVER-SIDE AIR BAG MODULE REMOVAL/INSTALLATION.)
2. Disconnect the clock spring connector.
3. Check for continuity between the clock spring terminals.

○—○ : Continuity

Step	Terminal											
	1A	1B	2A	2B	2C	2D	3A	3B	3C	4A	4B	4C
1	○							○				
2		○							○			
3			○							○		
4				○							○	
5					○							○
6						○	○					

W6U810WAE

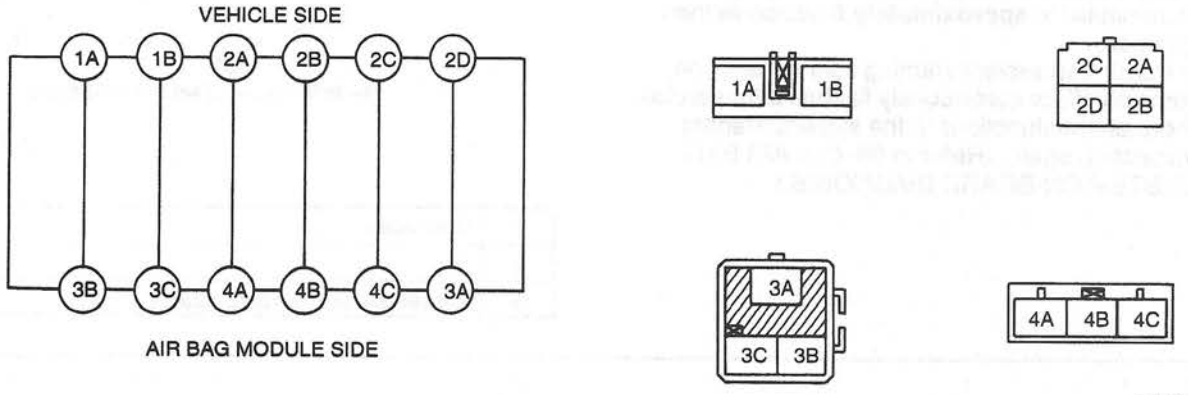

W6U810WAF

Note

- To prevent unexpected air bag deployment, terminals 1A and 1B are shorted when disconnected from the vehicle's main harness.

4. If not as specified, replace the clock spring.

CLOCK SPRING REMOVAL/INSTALLATION

1. Turn the ignition switch to LOCK.
2. Remove the column cover.
3. Remove the driver-side air bag module. (Refer to 08–10 DRIVER-SIDE AIR BAG MODULE REMOVAL/INSTALLATION.)
4. Remove the steering wheel. (Refer to 06–12 STEERING WHEEL AND COLUMN REMOVAL/INSTALLATION.)
5. Remove in the order indicated in the table.
6. Install in the reverse order of removal. (Refer to CLOCK SPRING ADJUSTMENT.)

W6U810W06

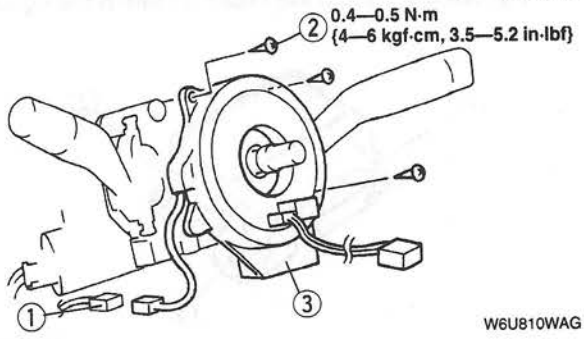

W6U810WAG

1	Connector
2	Screw
3	Clock spring

SAS UNIT REMOVAL/INSTALLATION

W6U810W07

Warning

- **Handling the SAS unit improperly can accidently deploy the air bag modules which may cause serious injury. Read AIR BAG SYSTEM SERVICE WARNINGS before handling the SAS unit. (Refer to 08–10 AIR BAG SYSTEM SERVICE WARNINGS.)**

1. Turn the ignition switch to LOCK.
2. Disconnect the negative battery cable and wait for more than **1 minute** to allow the backup power supply of the SAS unit to deplete its stored power.
3. Remove the rear console. (Refer to 09–17 REAR CONSOLE REMOVAL/INSTALLATION.)
4. Remove the side wall.
5. Remove in the order indicated in the table.
6. Install in the reverse order of removal.
7. Turn the ignition switch to ON.
8. Verify that the air bag system warning light illuminates for **approximately 6 seconds** then goes off.
9. If the air bag system warning light remains on, remains off, or continuously flashes after service, there are malfunctions in the system. Repeat the inspection again. (Refer to 08–01A AIR BAG SYSTEM ON-BOARD DIAGNOSIS.)

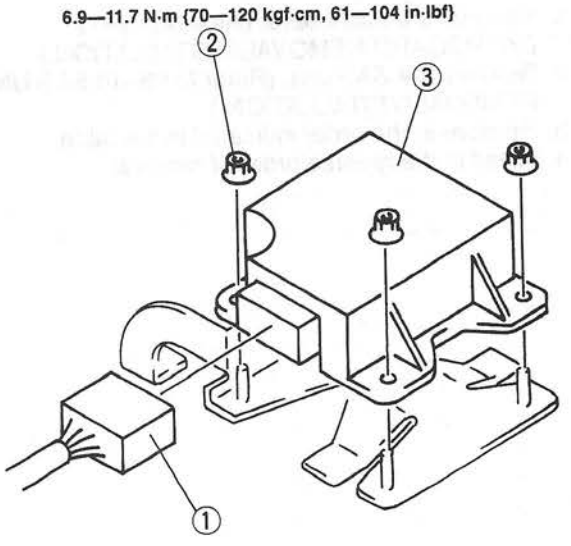

W6U810WAH

1	Connector
2	Nut ☞ Installation Note
3	SAS unit

Nut Installation Note
- Tighten the nuts in the order shown in the figure.

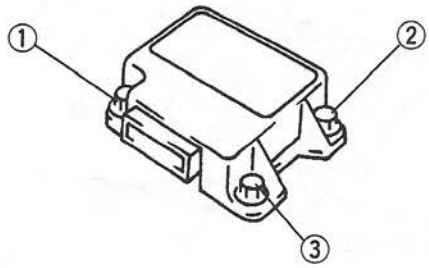

W6U810WA6

SAS UNIT BRACKET REMOVAL/INSTALLATION

W6U810W08

Warning
- **Handling the SAS unit improperly can accidently deploy the air bag modules which may cause serious injury. Read AIR BAG SYSTEM SERVICE WARNINGS before handling the SAS unit. (Refer to 08–10 AIR BAG SYSTEM SERVICE WARNINGS.)**

1. Remove the dashboard. (Refer to 09–17 DASHBOARD REMOVAL/INSTALLATION.)
2. Remove the SAS unit. (Refer to 08–10 SAS UNIT REMOVAL/INSTALLATION.)
3. Remove in the order indicated in the table.
4. Install in the reverse order of removal.

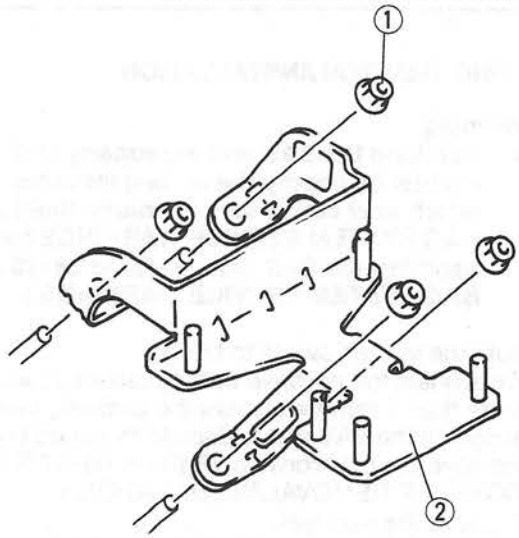

W6U810WAJ

1	Nut
2	SAS unit bracket

AIR BAG MODULES DEPLOYMENT AUTHORIZATION PROCEDURES

W6U810W09

1. Install a new SAS unit. Verify that the air bag system warning light flashes **approximately 6 seconds** after the ignition switch is turned to ON.
2. If a diagnostic trouble code is indicated, perform the appropriate AIR BAG SYSTEM ON-BOARD DIAGNOSIS. (Refer to 08–01A AIR BAG SYSTEM ON-BOARD DIAGNOSIS.)
3. Turn the ignition switch to LOCK then back to ON while the air bag system warning light flashes continuously. If the procedures have been performed correctly, the air bag system warning light will illuminate, then turn off after **approximately 6 seconds**.
4. If the light stays on, perform the deployment authorization procedure again.

AIR BAG MODULES DEPLOYMENT PROCEDURES

W6U810W10

Note
- If the **SSTs** (Deployment Tool and Harness Adapter) are not available, consult the nearest Mazda representative for assistance.

Deployment Procedures for Inside of Vehicle

1. Inspect the **SST** (Deployment Tool). (Refer to 08–10 INSPECTION OF SST (DEPLOYMENT TOOL).)
2. Move the vehicle to an open space, away from strong winds and close all vehicle doors and door glass.
3. Turn the ignition switch to LOCK.
4. Disconnect the negative battery cable and wait for more than **1 minute** to allow the backup power supply of the SAS unit to deplete its stored power.
5. Follow the appropriate procedure for deploying the driver-side or passenger-side air bag modules.

Driver-side air bag module

- Remove the lower panel, disconnect the clock spring connector, and then connect the **SST** (Harness Adapter) to the clock spring as shown.

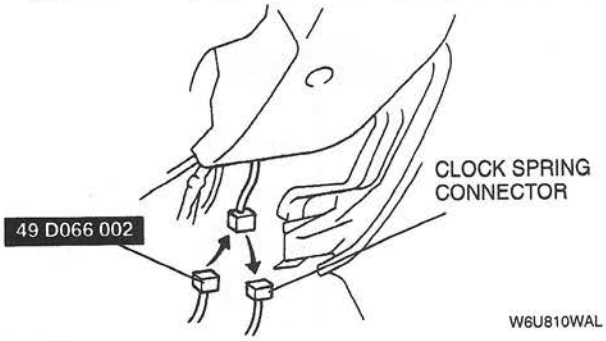

W6U810WAL

Passenger-side air bag module

- Remove the glove compartment, disconnect the passenger-side air bag module connector and then connect the **SST** (Harness Adapter) to the passenger-side air bag module as shown.

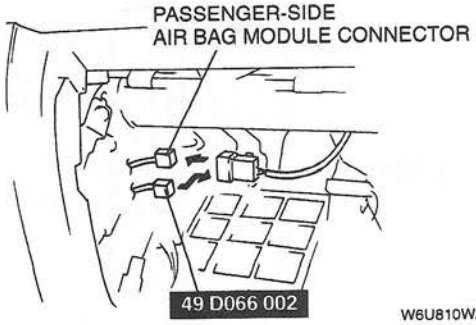

W6U810WAM

6. Connect the **SST** (Deployment Tool) to the **SST** (Harness Adapter).

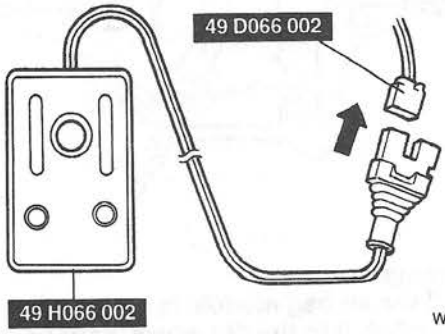

W6U810WAN

7. Connect the red clip of the **SST** (Deployment Tool) to the positive battery terminal and the black clip to the negative battery terminal.
8. Verify that the red light on the **SST** (Deployment Tool) is illuminated.

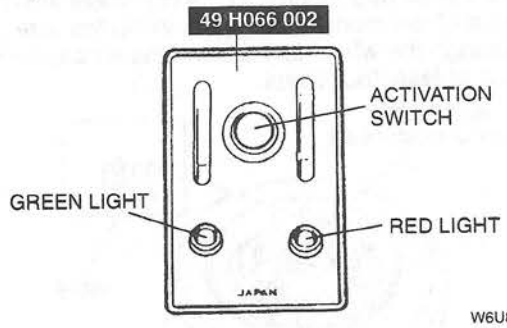

W6U810WAT

9. Make sure all persons are standing at least **6 m {20 ft}** from the vehicle.
10. Press the activation switch on the **SST** (Deployment Tool) to deploy the air bag module.

Deployment Procedures for Outside of Vehicle

1. Inspect the **SST** (Deployment Tool). (Refer to 08–10 INSPECTION OF SST (DEPLOYMENT TOOL).)
2. Turn the ignition switch to LOCK.
3. Disconnect the negative battery cable and wait for more than **1 minute** to allow the backup power supply of the SAS unit to deplete its stored power.
4. Follow the appropriate procedure for deploying the driver-side air bag or passenger-side air bag modules.

Driver-side air bag module

1. Remove the driver-side air bag module. (Refer to 08–10 DRIVER-SIDE AIR BAG MODULE REMOVAL/INSTALLATION.)
2. Install the two bolts to the driver-side air bag module.

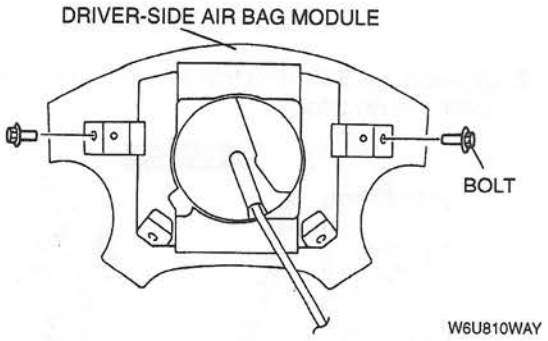

Warning

- **If the air bag module is not properly installed to the tire wheel, serious injury may occur when the module is deployed. When installing the air bag module to the tire wheel, make sure the front of the module is facing up.**

3. Tie the air bag module to the tire wheel with the front of the module facing up. Wrap the wire through the wheel and around the air bag module bolt at least four times.

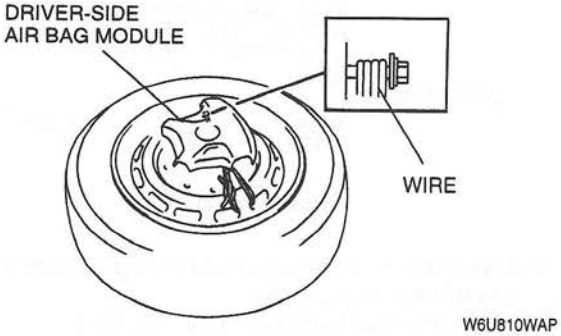

4. Connect the **SST** (Deployment Tool) to the driver-side air bag module as shown.

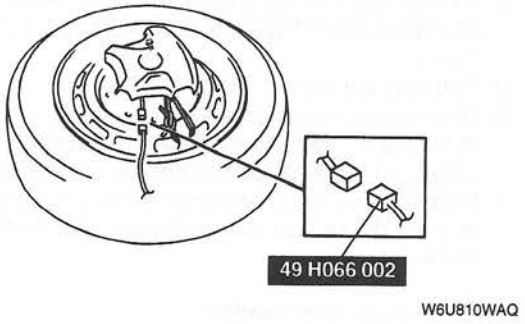

5. Stack three tires on top of the tire with the attached air bag module. Make sure the tire on top of the stack has a wheel.

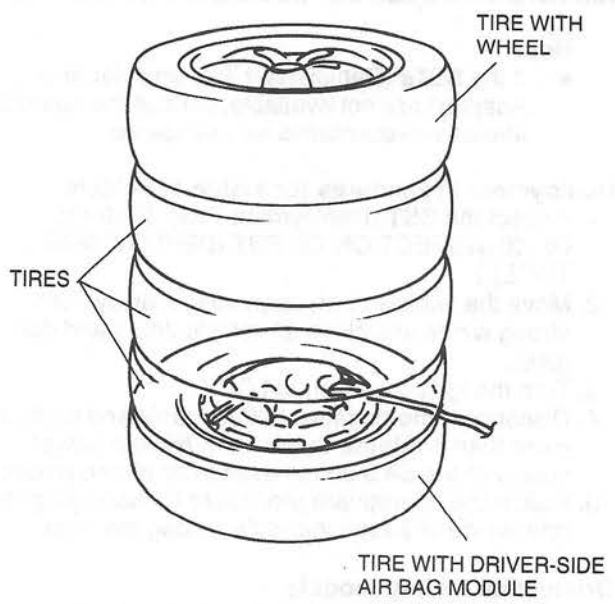

6. Tie all tires together with wire.

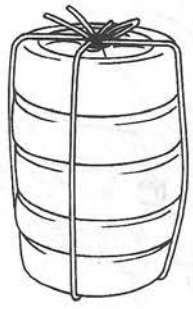

7. Connect the red clip of the **SST** (Deployment Tool) to the positive battery terminal and the black clip to the negative battery terminal.
8. Verify that the red light on the **SST** (Deployment Tool) is illuminated.

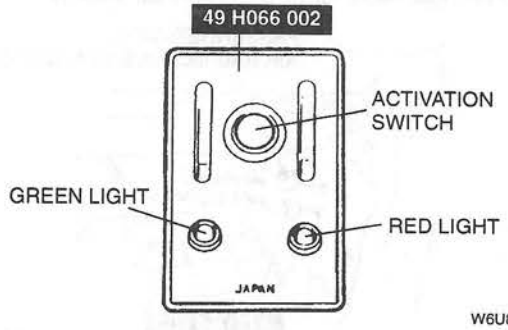

9. Make sure all persons are standing at least **6 m {20 ft}** from the tire.
10. Press the activation switch on the **SST** (Deployment Tool) to deploy the air bag module.

Passenger-side air bag module

1. Remove the passenger-side air bag module. (Refer to 08–10 PASSENGER-SIDE AIR BAG MODULE REMOVAL/INSTALLATION.)
2. Install the bolts to the passenger-side air bag module.

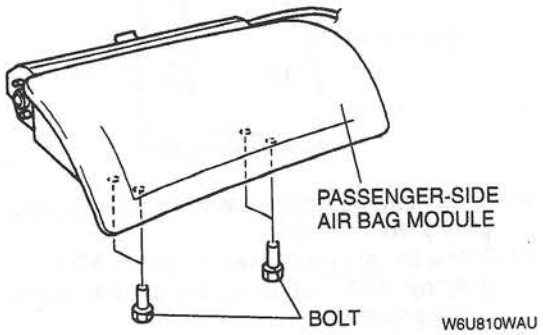

Warning

- **If the air bag module is not properly installed to the tire wheel, serious injury may occur when the module is deployed. When installing the air bag module to the tire wheel, make sure the front of the module is facing up.**

3. Tie the air bag module to the tire wheel with the front of the module facing up. Wrap the wire through the wheel and around the air bag module bolt at least four times.

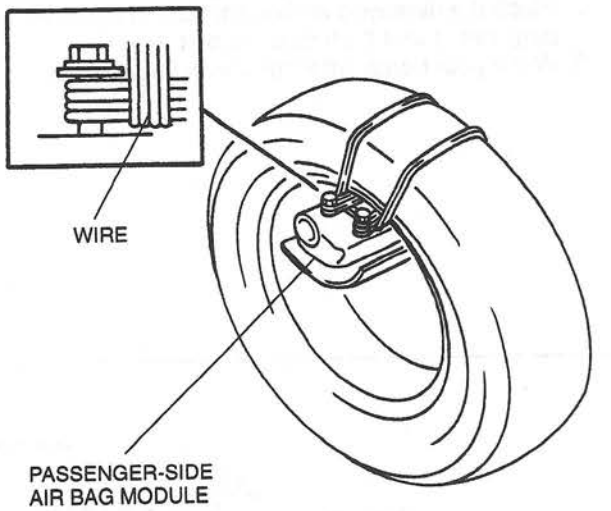

4. Connect the **SST** (Harness Adapter) to the passenger-side air bag module as shown.

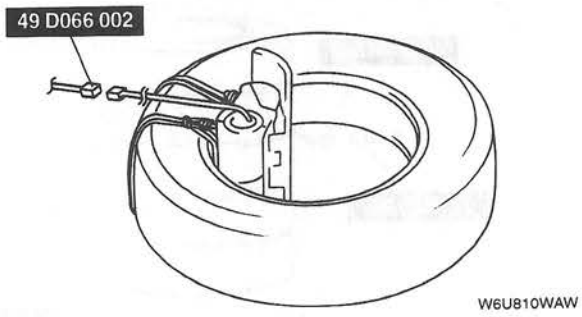

5. Stack the tire with the passenger-side air bag module on top of two tires. Stack a tire with a wheel on top of the three tires.

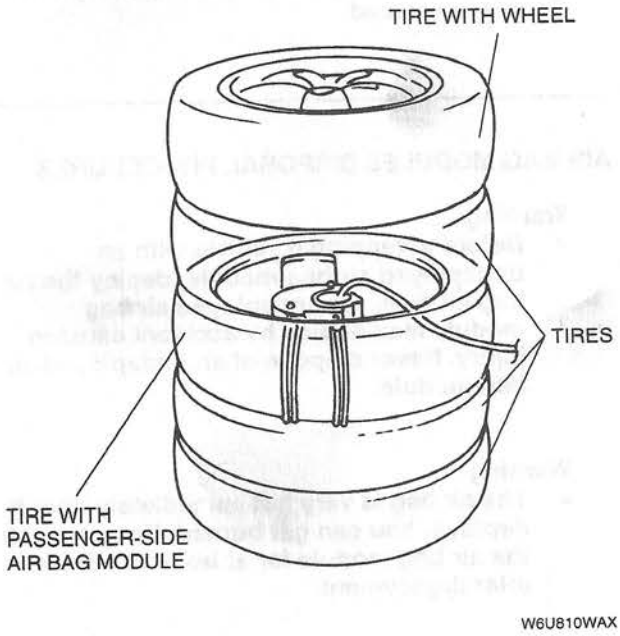

6. Tie all tires together with wire.



7. Connect the **SST** (Deployment Tool) to the **SST** (Harness Adapter).

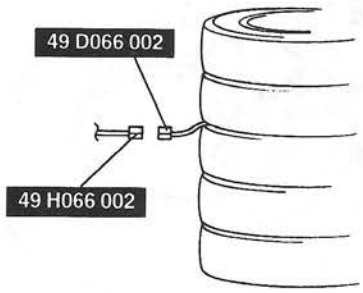

W6U810WAZ

8. Connect the red clip of the **SST** (Deployment Tool) to the positive battery terminal and the black clip to the negative battery terminal.
9. Verify that the red light on the **SST** (Deployment Tool) is illuminated.

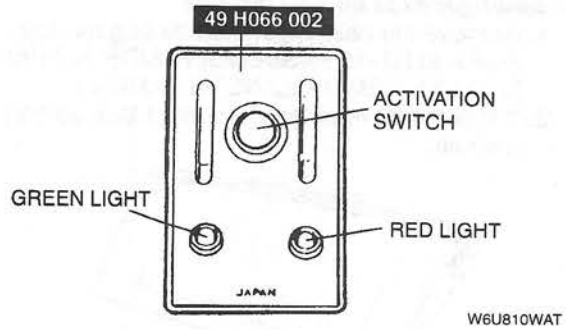

W6U810WAT

10. Make sure all persons are standing at least **6 m {20 ft}** from the tire.
11. Press the activation switch on the **SST** (Deployment Tool) to deploy the passenger-side air bag module.

AIR BAG MODULES DISPOSAL PROCEDURES

W6U810W11

Warning
- **Before scrapping a vehicle with an undeployed air bag module, deploy the air bag module. An undeployed air bag module may deploy by accident causing injury. Never dispose of an undeployed air bag module.**

Warning
- **The air bag is very hot immediately after it deploys. You can get burned. Do not touch the air bag module for at least 15 minutes after deployment.**

Warning
- **Pouring water on a deployed air bag is dangerous. The water will mix with residual gasses to form a gas that makes breathing difficult. Do not pour water on the deployed air bag module.**

Warning
- **A deployed air bag module may contain deposits of sodium hydroxide, a caustic byproduct of the gas-generated combustion. If this substance gets into your eyes or on your hands, it can cause irritation and itching. When handling a deployed air bag module, always wear gloves and safety glasses.**

1. Put on gloves and safety glasses.
2. Place the deployed air bag module in a plastic bag, seal it and then dispose of it.
3. Wash your hands after removing your gloves.

INSPECTION OF SST (DEPLOYMENT TOOL)

- Use the **SST** (Deployment Tool) to deploy a live air bag module before disposal.
- Before connecting the **SST** (Deployment Tool) to the clock spring, driver-side air bag module or passenger-side air bag module, inspect the operation of the **SST** (Deployment Tool).

W6U810W12

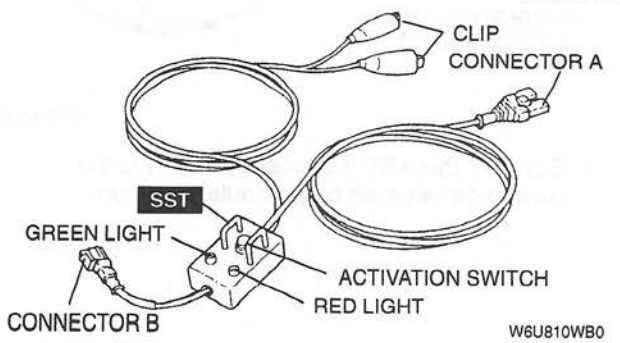

W6U810WB0

Inspection Procedure

1. Follow the steps below to verify that the **SST** (Deployment Tool) is operating correctly.

Step	Inspection procedure	Light condition	
		Green	Red
1	Connect red clip to positive battery terminal and black clip to negative battery terminal.	On	Off
2	Connect connectors A and B of **SST** (Deployment Tool).	Off	On
3	Press activation switch	On	Off

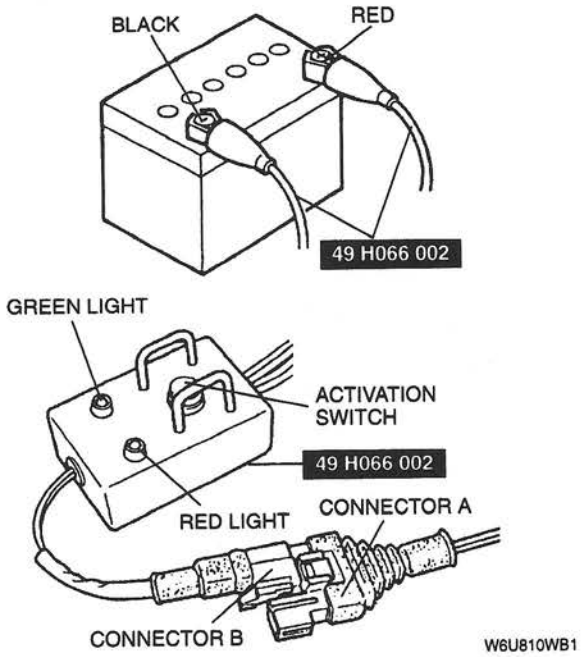

2. If not as specified, do not use the **SST** (Deployment Tool) because it may cause the air bag to unexpectedly deploy upon connection to the air bag module.

08–11 SEAT BELT

FRONT SEAT BELT
REMOVAL/INSTALLATION 08–11–1
REAR SEAT BELT
REMOVAL/INSTALLATION 08–11–2
REAR CENTER SEAT BELT
REMOVAL/INSTALLATION 08–11–2
FRONT BUCKLE
REMOVAL/INSTALLATION 08–11–3
Driver's Side 08–11–3
Passenger's Side 08–11–3
BUCKLE SWITCH INSPECTION 08–11–3
REAR BUCKLE
REMOVAL/INSTALLATION 08–11–4
SEAT BELT ELR INSPECTION 08–11–4
SEAT BELT ALR INSPECTION 08–11–4

FRONT SEAT BELT REMOVAL/INSTALLATION

W6U811W01

Caution

- **Do not disassemble the retractor. The emergency locking retractor (ELR) has a spring that will unwind if the retractor is disassembled. The spring cannot be rewound by hand. If this occurs, the ELR will not work properly.**

1. Remove the B-pillar lower trim. (Refer to 09–17 B-PILLAR LOWER TRIM REMOVAL/INSTALLATION.)
2. Remove in the order indicated in the table.
3. Install in the reverse order of removal.

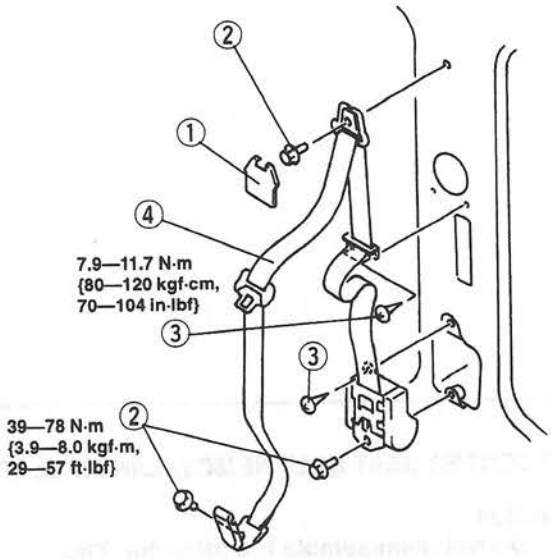

W6U811WA0

1	Cover
2	Bolt
3	Screw
4	Front seat belt

REAR SEAT BELT REMOVAL/INSTALLATION

W6U811W02

Caution

- **Do not disassemble the retractor. The emergency locking retractor (ELR) has a spring that will unwind if the retractor is disassembled. The spring cannot be rewound by hand. If this occurs, the ELR will not work properly.**

1. Remove the C-pillar trim. (Refer to 09–17 C-PILLAR TRIM REMOVAL/INSTALLATION.)
2. Remove in the order indicated in the table.
3. Install in the reverse order of removal.

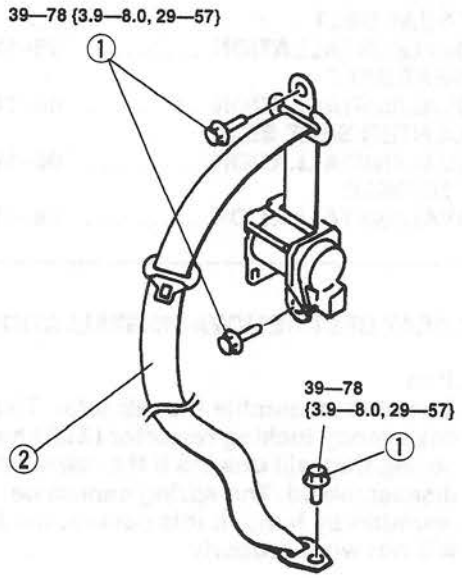

N·m {kgf·m, ft·lbf}

W6U811WA1

1	Bolt
2	Rear seat belt

REAR CENTER SEAT BELT REMOVAL/INSTALLATION

W6U811W03

Caution

- **Do not disassemble the retractor. The emergency locking retractor (ELR) has a spring that will unwind if the retractor is disassembled. The spring cannot be rewound by hand. If this occurs, the ELR will not work properly.**

1. Remove the rear package trim. (Refer to 09–17 REAR PACKAGE TRIM REMOVAL/INSTALLATION.)
2. Remove in the order indicated in the table.
3. Install in the reverse order of removal.

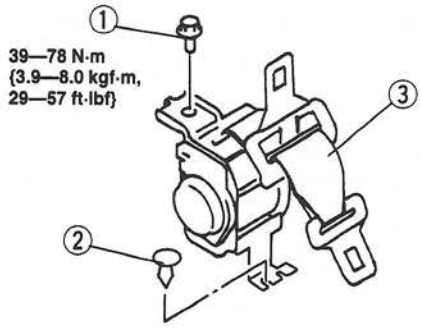

W6U811WA2

1	Bolt
2	Fastener
3	Rear center seat belt

FRONT BUCKLE REMOVAL/INSTALLATION

W6U811W04

Driver's Side

1. Remove the front seat. (Refer to 09–13 FRONT SEAT REMOVAL/INSTALLATION.)
2. Remove the front buckle from the front seat. (Refer to 09–13 FRONT SEAT DISASSEMBLY/ASSEMBLY.)
3. Install in the reverse order of removal.

Passenger's Side

1. Remove in the order indicated in the table.
2. Install in the reverse order of removal.

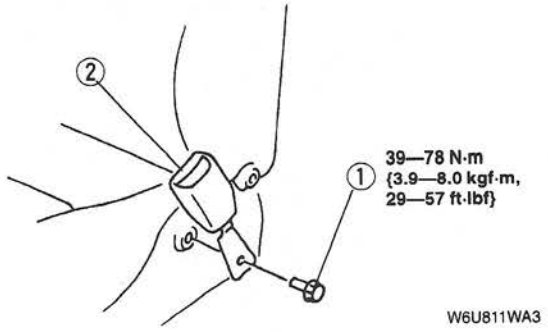

W6U811WA3

1	Bolt
2	Front buckle

BUCKLE SWITCH INSPECTION

W6U811W05

1. Disconnect the negative battery cable.
2. Disconnect the driver-side buckle switch connector.
3. Check for continuity between the buckle switch terminals.

Power Seat

○—○ : Continuity

Seat belt	Terminal	
	C	D
Buckled		
Unbuckled	○	○

W6U811WA4

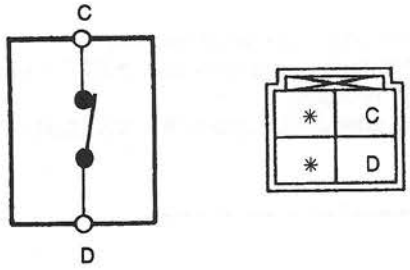

W6U811WA5

Manual Seat

○—○ : Continuity

Seat belt	Terminal	
	C	B
Buckled		
Unbuckled	○	○

W6U811WB0

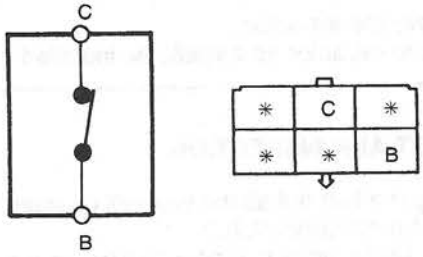

W6U811WA9

4. If not as specified, replace the driver's side front buckle.

REAR BUCKLE REMOVAL/INSTALLATION

1. Remove the rear seat cushion.
2. Remove in the order indicated in the table.
3. Install in the reverse order of removal.

W6U811W06

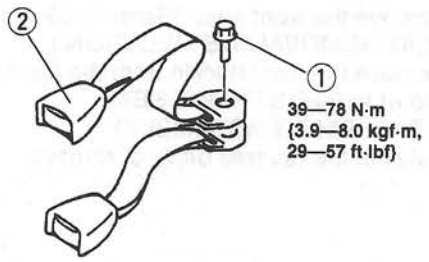

W6U811WA6

1	Bolt
2	Rear buckle

SEAT BELT ELR INSPECTION

W6U811W07

1. Verify the belt can be pulled out smoothly and that it moves smoothly when worn.
2. Verify the retractor locks when the belt is quickly pulled.

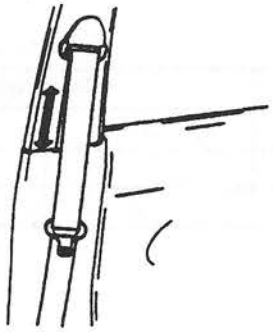

W6U811WA7

3. Remove the retractor.
4. Hold the retractor as it would be installed.
5. Slowly incline the retractor while pulling out the belt.
6. Verify that the retractor locks at **approximately 30°** inclination.

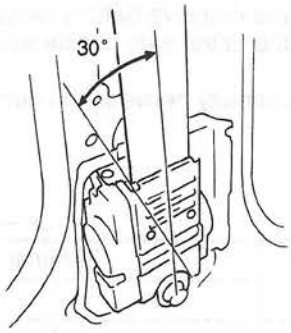

W6U811WA8

7. If not as specified, replace the seat belt.

SEAT BELT ALR INSPECTION

W6U811W08

1. Pulling the belt out all the way will change the lock mode from ELR to ALR.
2. Verify the retractor makes a clicking sound as the belt slowly retracts. If no sound is heard, the lock mode has not changed to ALR. If necessary, repeat step 1.
3. Verify the belt locks when pulled.
4. Verify the lock mode changes to ELR when the belt fully retracts.
5. If not as specified, replace the seat belt.

08–60 SERVICE TOOLS

08 RESTRAINTS SST 08–60–1

08 RESTRAINTS SST

W6U860W01

49 H066 002 Deployment tool  TH066002X	49 0839 285 Fuel and Thermometer checker 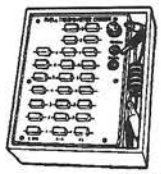 T0839285X	49 D066 002 Harness adapter 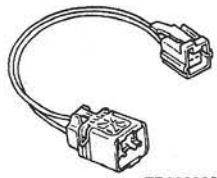 TD066002X

BODY & ACCESSORIES

09 SECTION

TROUBLESHOOTING [POWER WINDOW SYSTEM] 09–01A
TROUBLESHOOTING [REAR WINDOW DEFROSTER] 09–01B
TROUBLESHOOTING [POWER OUTSIDE MIRROR] 09–01C
TROUBLESHOOTING [POWER SEAT] 09–01D
TROUBLESHOOTING [POWER DOOR LOCK SYSTEM] 09–01E
TROUBLESHOOTING [IMMOBILIZER SYSTEM] ... 09–01F
TROUBLESHOOTING [THEFT-DETERRENT (KEYLESS ENTRY SECURITY) SYSTEM] 09–01G
TROUBLESHOOTING [SUNROOF] 09–01H
TROUBLESHOOTING [EXTERIOR LIGHTING SYSTEM] 09–01J
TROUBLESHOOTING [INTERIOR LIGHTING SYSTEM] 09–01K
TROUBLESHOOTING [SIGNAL LIGHTING SYSTEM] 09–01L
TROUBLESHOOTING [WIPER/WASHER SYSTEMS] 09–01M
TROUBLESHOOTING [AUDIO] 09–01N
TROUBLESHOOTING [INSTRUMENTATION/ DRIVER INFO.] 09–01P
BODY PANELS 09–10
DOORS AND LIFTGATE 09–11
GLASS/WINDOWS/MIRRORS . 09–12
SEATS 09–13
SECURITY AND LOCKS 09–14
SLIDING SUNROOF 09–15
EXTERIOR TRIM 09–16
INTERIOR TRIM 09–17
LIGHTING SYSTEMS 09–18
WIPER/WASHER SYSTEMS .. 09–19
ENTERTAINMENT 09–20
POWER SYSTEMS 09–21
INSTRUMENTATION/DRIVER INFO. 09–22
CONTROL SYSTEM 09–40
TECHNICAL DATA 09–50
SERVICE TOOLS 09–60

09–01A TROUBLESHOOTING [POWER WINDOW SYSTEM]

FOREWORD 09–01A–1
POWER WINDOW SYSTEM SYMPTOM TROUBLESHOOTING 09–01A–2
Diagnostic Index 09–01A–2
Symptom Troubleshooting 09–01A–2

FOREWORD

W6U901W01

- Refer to 00–00 GENERAL INFORMATION and thoroughly read and understand the basic flow of troubleshooting to properly perform the procedures.

POWER WINDOW SYSTEM SYMPTOM TROUBLESHOOTING

W6U901W02

Diagnostic Index

No.	Symptom
1	Power windows do not operate
2	Power window at driver's door cannot be operated by power window main switch
3	Power window at driver's door does not operate with one-touch operation
4	Power windows (except at driver's door) can be operated by power window main switch, but cannot be operated by power window subswitch
5	Power windows (except at driver's door) can be operated by power window subswitches, but cannot be operated by power window main switch
6	Power windows (except at driver's door) can be operated by power window main switch when power-cut switch is at OFF
7	Power windows (except at driver's door) can be operated by power window subswitches when power-cut switch is at OFF

Symptom Troubleshooting

1 Power windows do not operate

TROUBLESHOOTING HINTS
Malfunction in power window main switch power supply/ground circuit
① Power windows do not operate
- P.WIND 30 A fuse malfunction
- Power window main switch malfunction
- Malfunction in wiring harness between P.WIND 30 A fuse and power window main switch
- Malfunction in wiring harness between power window main switch and ground

STEP	INSPECTION		ACTION
1	Is P.WIND 30 A fuse okay? 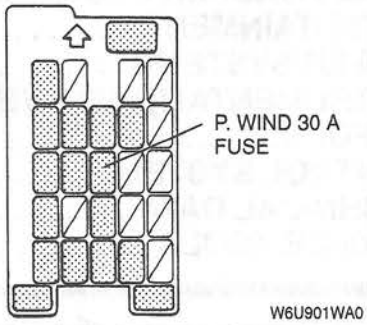 W6U901WA0	Yes	Go to next step.
		No	Replace fuse after repairing wiring harness.
2	Remove driver's side front door trim. Turn ignition switch to ON. Measure voltage at terminal H at power window main switch connector of wiring harness. Is voltage **B+**? 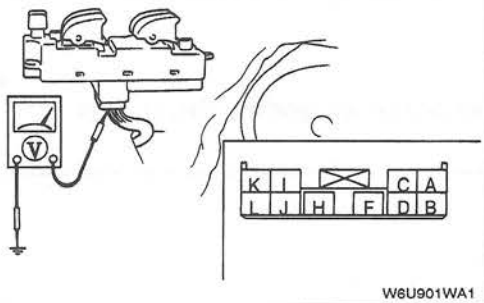 W6U901WA1	Yes	Go to next step.
		No	Repair wiring harness between P.WIND 30 A fuse and power window main switch.

STEP	INSPECTION		ACTION
3	Turn ignition switch to LOCK. Disconnect power window main switch connector. Check for continuity between terminal F at power window main switch connector of wiring harness and ground. Is there continuity? 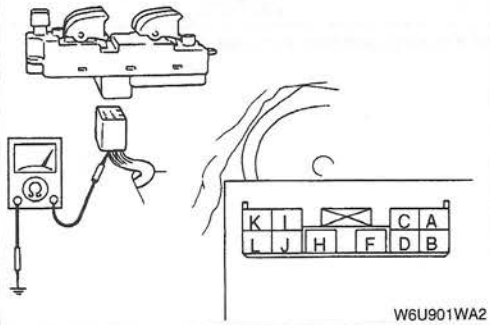 W6U901WA2	Yes	Replace power window main switch.
		No	Repair wiring harness between power window main switch and ground.

2	Power window at driver's door cannot be operated by power window main switch

TROUBLESHOOTING HINTS

Malfunction in power window main switch input signal circuit

① Power window at driver's door does not operate

- Power window main switch malfunction
- Malfunction in wiring harness between power window main switch and driver's side power window regulator

Malfunction in power window regulator operation circuit

① Power window at driver's door does not operate

- Driver's side power window regulator malfunction

STEP	INSPECTION		ACTION
1	Inspect power window main switch. ☞ 09–12 POWER WINDOW MAIN SWITCH INSPECTION Is power window main switch okay?	Yes	Go to next step.
		No	Replace power window main switch.
2	Inspect driver's side power window regulator. ☞ 09–12 POWER WINDOW REGULATOR INSPECTION Is driver's side power window regulator okay?	Yes	Repair wiring harness between power window main switch and driver's side power window regulator.
		No	Replace driver's side power window regulator.

3	Power window at driver's door does not operate with one-touch operation

TROUBLESHOOTING HINTS

Malfunction in power window main switch input signal circuit

① Power window at driver's door does not operate

- Power window main switch malfunction

STEP	INSPECTION		ACTION
—	—	—	Replace power window main switch.

09

4	**Power windows (except at driver's door) can be operated by power window main switch, but cannot be operated by power window subswitch**		
TROUBLESHOOTING HINTS Malfunction in power window subswitch power supply circuit ① Power windows do not operate • Power window subswitch malfunction • Malfunction in wiring harness between P.WIND 30 A fuse and power window subswitch			
STEP	**INSPECTION**		**ACTION**
—	Remove passenger's side front door trim or rear door trim. ☞ 09–17 FRONT DOOR TRIM REMOVAL/INSTALLATION ☞ 09–17 REAR DOOR TRIM REMOVAL/INSTALLATION Turn ignition switch to ON. Measure voltage at terminal B at power window subswitch connector of wiring harness. Is voltage **B+**? 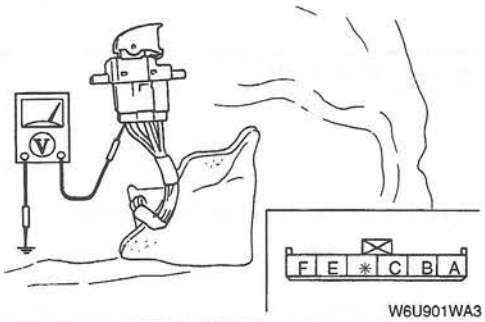 W6U901WA3	Yes	Replace power window subswitch.
		No	Repair wiring harness between P.WIND 30 A fuse and power window subswitch.

5	**Power windows (except at driver's door) can be operated by power window subswitches, but cannot be operated by power window main switch**		
TROUBLESHOOTING HINTS Malfunction in power window main switch power supply circuit ① Power windows do not operate • Power window main switch malfunction			
STEP	**INSPECTION**		**ACTION**
—	—	—	Replace power window main switch.

6	**Power windows (except at driver's door) can be operated by power window main switch when power-cut switch is at OFF**		
TROUBLESHOOTING HINTS Malfunction in power window main switch input signal circuit ① Power windows (except at driver's door) can be operated by power window main switch when power-cut switch is at OFF • Power window main switch malfunction			
STEP	**INSPECTION**		**ACTION**
—	—	—	Replace power window main switch.

7	**Power windows (except at driver's door) can be operated by power window subswitches when power-cut switch is at OFF**		
TROUBLESHOOTING HINTS Malfunction in power window main switch input signal circuit ① Power windows (except at driver's door) can be operated by power window subswitches when power-cut switch is at OFF • Power window main switch malfunction			
STEP	**INSPECTION**		**ACTION**
—	—	—	Replace power window main switch.

09–01B TROUBLESHOOTING [REAR WINDOW DEFROSTER]

FOREWORD 09–01B–1
REAR WINDOW DEFROSTER SYMPTOM TROUBLESHOOTING 09–01B–1
Diagnostic Index 09–01B–1
Symptom Troubleshooting 09–01B–1

FOREWORD

W6U901W06

- Refer to 00–00 GENERAL INFORMATION and thoroughly read and understand the basic flow of troubleshooting to properly perform the procedures.

REAR WINDOW DEFROSTER SYMPTOM TROUBLESHOOTING

W6U901W07

Diagnostic Index

No.	Symptom
1	Rear window defroster does not function
2	Rear window defroster does not continuously operate for 15 minutes, followed by cycle of three minutes off and two minutes on

Symptom Troubleshooting

1	Rear window defroster does not function

TROUBLESHOOTING HINTS

Malfunction in CPU power supply/ground circuit
① Rear window defroster does not function
- ROOM 15 A fuse malfunction
- Malfunction in wiring harness between ROOM 15 A fuse and CPU
- Malfunction in wiring harness between CPU and ground

Malfunction in rear window defroster relay power supply circuit
① Rear window defroster does not function
- METER 10 A fuse malfunction
- DEFOG 40 A fuse malfunction
- Malfunction in wiring harness between METER 10 A fuse and rear window defroster relay
- Malfunction in wiring harness between DEFOG 40 A fuse and rear window defroster relay

Malfunction in CPU input signal circuit
① Rear window defroster does not function
- CPU malfunction
- Rear window defroster switch malfunction
- Malfunction in wiring harness between CPU and rear window defroster switch
- Malfunction in wiring harness between rear window defroster switch and ground

Malfunction in rear window defroster operation circuit
① Rear window defroster does not function
- CPU malfunction
- Rear window defroster relay malfunction
- Malfunction in wiring harness between rear window defroster relay and CPU
- Malfunction in wiring harness between rear window defroster relay and filament
- Malfunction in wiring harness between filament and ground

STEP	INSPECTION		ACTION
1	Are ROOM 15 A, DEFOG 40 A and METER 10 A fuses okay? 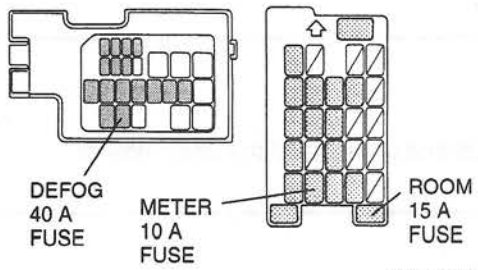 W6U901WB0	Yes	Go to next step.
		No	Replace fuse after repairing wiring harness.
2	Remove driver's side front scuff plate. Remove driver's side front side trim. Remove nut fixed in joint box and remove CPU from joint box. Measure voltage at terminal 1J at joint box. Is voltage **B+**? 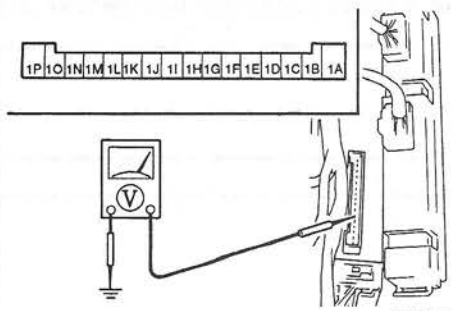 W6U901WB1	Yes	Go to next step.
		No	Repair wiring harness between ROOM 15 A fuse and CPU.
3	Check for continuity between terminal 1G at joint box and ground. Is there continuity? 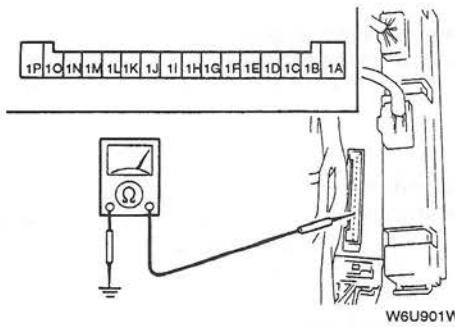 W6U901WB2	Yes	Go to next step.
		No	Repair wiring harness between CPU and ground.
4	Press rear window defroster switch on. Check for continuity between terminal 1N at joint box and ground. Is there continuity? 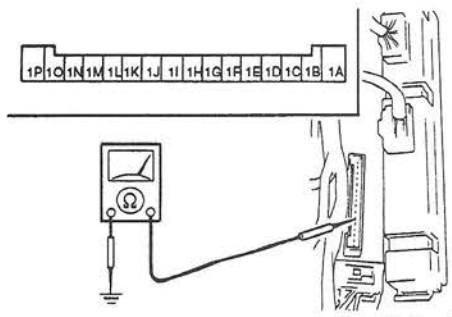 W6U901WB3	Yes	Go to step 7.
		No	Go to next step.

STEP	INSPECTION		ACTION
5	Remove meter hood. Remove rear window defroster switch without disconnecting rear window defroster switch connector. Check for continuity between terminal B at rear window defroster switch connector of wiring harness and ground with rear window defroster switch on. Is there continuity? 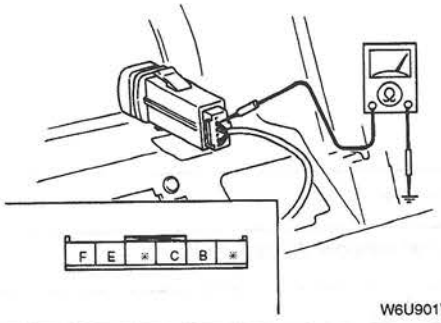 W6U901WB4	Yes	Repair wiring harness between CPU and rear window defroster switch.
		No	Go to next step.
6	Disconnect rear window defroster switch connector. Check for continuity between terminal C at rear window defroster switch connector of wiring harness and ground. Is there continuity? 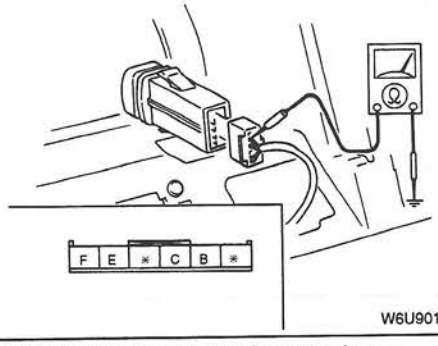 W6U901WB5	Yes	Replace rear window defroster switch.
		No	Repair wiring harness between rear window defroster switch and ground.
7	Remove rear window defroster relay. Turn ignition switch to ON. Measure voltage at terminal A at rear window defroster relay connector of wiring harness. Is voltage **B+**? 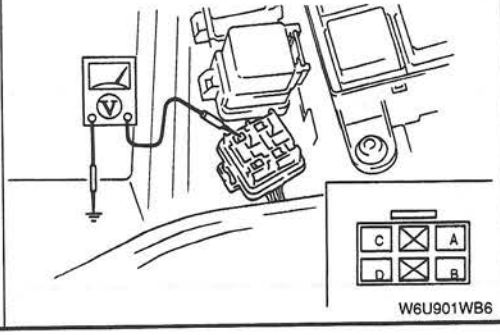 W6U901WB6	Yes	Go to next step.
		No	Repair wiring harness between METER 10 A fuse and rear window defroster relay.

09

STEP	INSPECTION		ACTION
8	Measure voltage at terminal B at rear window defroster relay connector of wiring harness. Is voltage **B+**? 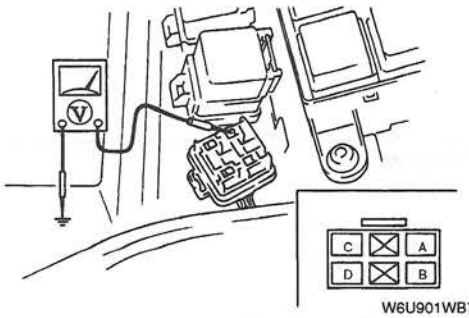 W6U901WB7	Yes	Go to next step.
		No	Repair wiring harness between DEFOG 40 A fuse and rear window defroster relay.
9	Inspect rear window defroster relay. ☞ 09–12 REAR WINDOW DEFROSTER RELAY INSPECTION Is rear window defroster relay okay?	Yes	Go to next step.
		No	Replace rear window defroster relay.
10	Install rear window defroster relay and CPU. Measure voltage at terminal 3F (USA) or 4J (CANADA) at CPU connector and terminal D at rear window defroster relay of wiring harness with rear window defroster switch off. Is voltage **B+**? 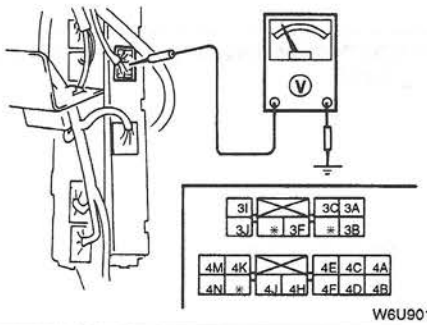 W6U901WB8	Yes	Go to next step.
		No	Repair wiring harness between rear window defroster relay and CPU.
11	Measure voltage at terminal 3F (USA) or 4J (CANADA) at CPU connector and terminal D at rear window defroster relay of wiring harness with rear window defroster switch on. Is voltage **0 V**? 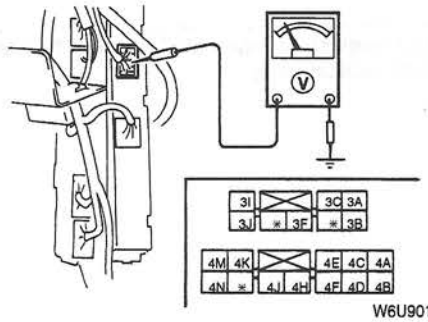 W6U901WB9	Yes	Go to next step.
		No	Replace CPU.

STEP	INSPECTION		ACTION
12	Press rear window defroster switch on. Measure voltage at terminal A at filament connector of wiring harness. Is voltage **B+**? 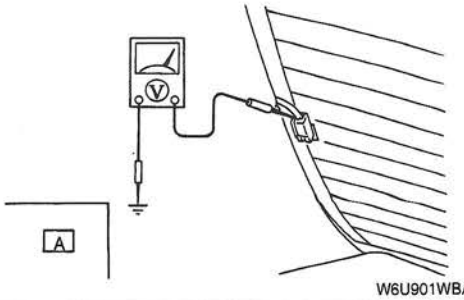 W6U901WBA	Yes	Go to next step.
		No	Repair wiring harness between rear window defroster relay and filament.
13	Disconnect filament connector. Remove the C-piller trim. Is filament installed to body ground securely? 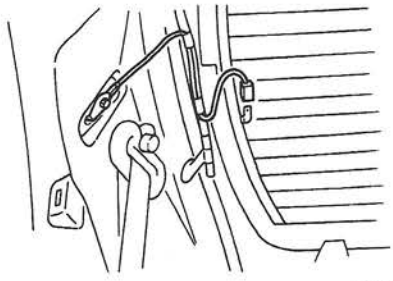 W6U901WBB	Yes	Repair filament.
		No	Repair wiring harness between filament and ground.

2	**Rear window defroster does not continuously operate for 15 minutes, followed by cycle of three minutes off and two minutes on**		
TROUBLESHOOTING HINTS Malfunction in rear window defroster operation circuit ① Rear window defroster does not continuously operate for 15 minutes, followed by cycle of three minutes off and two minutes on • CPU malfunction			
STEP	**INSPECTION**		**ACTION**
—	—	—	Replace CPU.

09

09–01C TROUBLESHOOTING [POWER OUTSIDE MIRROR]

FOREWORD 09–01C–1
POWER OUTSIDE MIRROR SYMPTOM TROUBLESHOOTING 09–01C–1
Diagnostic Index 09–01C–1
Symptom Troubleshooting 09–01C–2

FOREWORD

W6U901W11

- Refer to 00–00 GENERAL INFORMATION and thoroughly read and understand the basic flow of troubleshooting to properly perform the procedures.

POWER OUTSIDE MIRROR SYMPTOM TROUBLESHOOTING

W6U901W12

Diagnostic Index

No.	Symptom
1	Power outside mirrors do not operate
2	Left power outside mirror does not operate vertically or horizontally (Right power outside mirror operates)
3	Right power outside mirror does not operate vertically or horizontally (Left power outside mirror operates)

Symptom Troubleshooting

1	Power outside mirrors do not operate

TROUBLESHOOTING HINTS

Malfunction in power outside mirror switch power supply/ground circuit

① Power outside mirrors do not operate
- RADIO 15 A fuse malfunction
- Power outside mirror switch malfunction
- Malfunction in wiring harness between RADIO 15 A fuse and power outside mirror switch
- Malfunction in wiring harness between power outside mirror switch and ground

Malfunction in power outside mirror switch input signal circuit

① Power outside mirrors do not operate
- Power outside mirror switch malfunction

STEP	INSPECTION		ACTION
1	Is RADIO 15 A fuse okay? 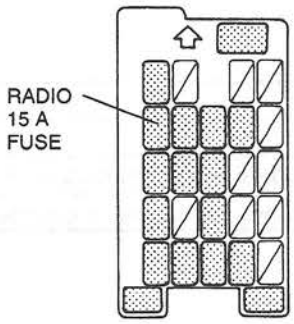 W6U901WC0	Yes	Go to next step.
		No	Replace fuse after repairing wiring harness.
2	Remove power outside mirror switch. Turn ignition switch to ACC. Measure voltage at terminal C at power outside mirror switch connector of wiring harness. Is voltage **B+**? 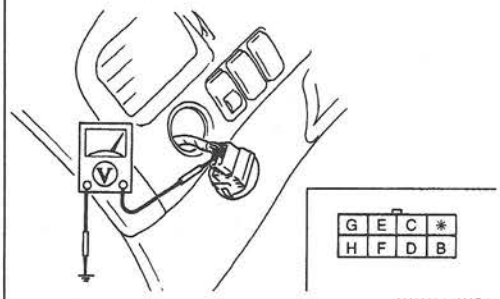 W6U901WC1	Yes	Go to next step.
		No	Repair wiring harness between RADIO 15 A fuse and power outside mirror switch.
3	Turn ignition switch to LOCK. Check for continuity between terminal E at power outside mirror switch connector of wiring harness and ground. Is there continuity? 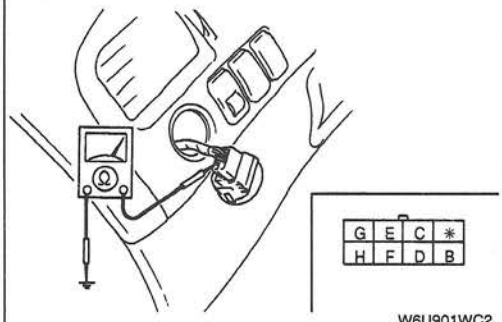 W6U901WC2	Yes	Replace power outside mirror switch.
		No	Repair wiring harness between power outside mirror switch and ground.

2	Left power outside mirror does not operate vertically or horizontally (Right power outside mirror operates)		
TROUBLESHOOTING HINTS Malfunction in power outside mirror switch input signal circuit ① Left power outside mirror does not operate • Power outside mirror switch malfunction • Malfunction in wiring harness between power outside mirror switch and left power outside mirror Malfunction in power outside mirror operation circuit ① Left power outside mirror does not operate • Left power outside mirror malfunction			
STEP	**INSPECTION**		**ACTION**
1	Remove power outside mirror switch without disconnecting power outside mirror switch connector. Turn ignition switch to ACC. Turn power outside mirror switch to left side position and turn it to left or to down position. Measure voltage at terminal F at power outside mirror switch connector of wiring harness. Is voltage **B+**? 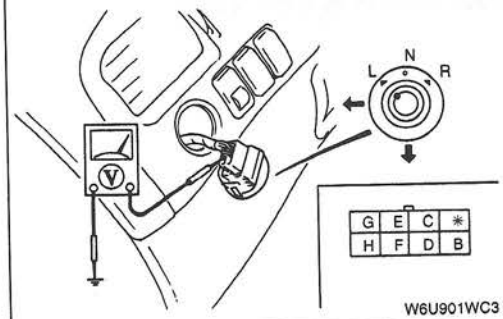 	Yes	Go to next step.
		No	Replace power outside mirror switch.
2	Remove driver's side front door trim. Partially peel off driver's side front door screen. Turn ignition switch to ACC. Turn power outside mirror switch to left side position and turn it to left or to down position. Measure voltage at terminal D at left power outside mirror connector of wiring harness. Is voltage **B+**? 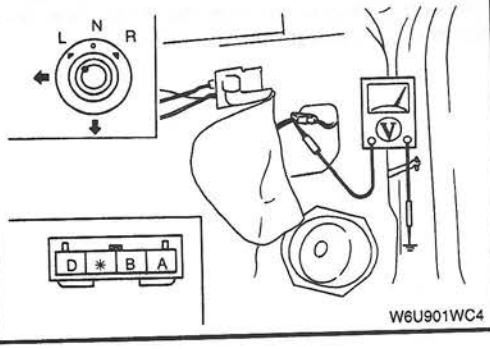 	Yes	Replace left power outside mirror.
		No	Repair wiring harness between power outside mirror switch and left power outside mirror.

3	Right power outside mirror does not operate vertically or horizontally (Left power outside mirror operates)

TROUBLESHOOTING HINTS

Malfunction in power outside mirror switch input signal circuit

① Right power outside mirror does not operate
- Power outside mirror switch malfunction
- Malfunction in wiring harness between power outside mirror switch and right power outside mirror

Malfunction in power outside mirror operation circuit

① Right power outside mirror does not operate
- Right power outside mirror malfunction

STEP	INSPECTION		ACTION
1	Remove power outside mirror switch without disconnecting power outside mirror switch connector. Turn ignition switch to ACC. Turn power outside mirror switch to right side position and turn it to left or to down position. Measure voltage at terminal F at power outside mirror switch connector of wiring harness. Is voltage **B+**? 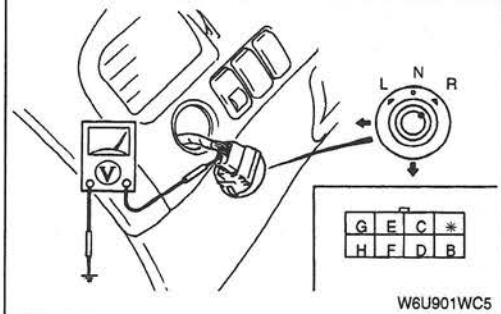 W6U901WC5	Yes	Go to next step.
		No	Replace power outside mirror switch.
2	Remove passenger's side front door trim. Partially peel off passenger's side front door screen. Turn ignition switch to ACC. Turn power outside mirror switch to right side position and turn it to left or to down position. Measure voltage at terminal D at right power outside mirror connector of wiring harness. Is voltage **B+**? 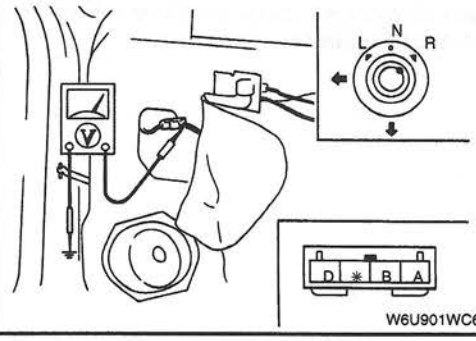 W6U901WC6	Yes	Replace right power outside mirror.
		No	Repair wiring harness between power outside mirror switch and right power outside mirror.

09–01D TROUBLESHOOTING [POWER SEAT]

FOREWORD 09–01D–1
POWER SEAT SYMPTOM TROUBLESHOOTING 09–01D–1
Diagnostic Index 09–01D–1
Symptom Troubleshooting 09–01D–1

FOREWORD

W6U901W16

- Refer to 00–00 GENERAL INFORMATION and thoroughly read and understand the basic flow of troubleshooting to properly perform the procedures.

POWER SEAT SYMPTOM TROUBLESHOOTING

W6U901W17

Diagnostic Index

- Use the chart below to verify the symptoms of the trouble in order to diagnose the appropriate area.

No.	Malfunction symptom
1	Power seat does not operate at all
2	Power seat does not slide forward or backward (Other functions operate normally)
3	Front of driver's seat does not move up or down (Other functions operate normally)
4	Rear of driver's seat does not move up or down (Other functions operate normally)

Symptom Troubleshooting

1 Power seat does not operate

TROUBLESHOOTING HINTS
Malfunction in power seat power supply/ground circuit
① Power seat does not operate
- P.SEAT 30 A fuse malfunction
- Power seat switch malfunction
- Malfunction of wiring harness between P.SEAT 30 A fuse and power seat switch
- Malfunction of wiring harness between power seat switch and ground

STEP	INSPECTION		ACTION
1	Is P.SEAT 30 A fuse okay?	Yes	Go to next step.
		No	Replace fuse after repairing wiring harness.
2	Measure voltage at terminal A at power seat switch connector of wiring harness. Is voltage **B+**? 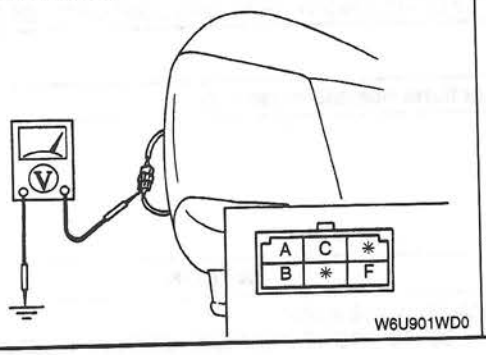	Yes	Go to next step.
		No	Repair wiring harness between P.SEAT 30 A fuse and power seat switch.

STEP	INSPECTION		ACTION
3	Disconnect power seat switch connector. Check for continuity between terminal F at power seat switch connector of wiring harness and ground. Is there continuity? 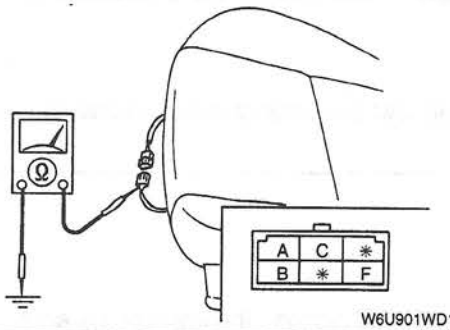	Yes	Replace power seat switch. ☞ 09–13 FRONT SEAT DISASSEMBLY/ASSEMBLY
		No	Repair wiring harness between power seat switch and ground.

2	Power seat does not slide forward or backward (Other functions operate normally)		
TROUBLESHOOTING HINTS Malfunction in slide motor circuit ① Power seat does not slide forward or backward • Power seat switch malfunction • Slide motor malfunction			
STEP	**INSPECTION**		**ACTION**
—	Inspect power seat switch. ☞ 09–13 POWER SEAT SWITCH INSPECTION Is power seat switch okay?	Yes	Replace slide motor. ☞ 09–13 FRONT SEAT DISASSEMBLY/ASSEMBLY
		No	Replace power seat switch. ☞ 09–13 FRONT SEAT DISASSEMBLY/ASSEMBLY

3	Front of driver's seat does not move up or down (Other functions operate normally)		
TROUBLESHOOTING HINTS Malfunction in front tilt motor circuit ① Power seat does not move up or down at front • Power seat switch malfunction • Front tilt motor malfunction			
STEP	**INSPECTION**		**ACTION**
—	Inspect power seat switch. ☞ 09–13 POWER SEAT SWITCH INSPECTION Is power seat switch okay?	Yes	Replace front tilt motor. ☞ 09–13 FRONT SEAT DISASSEMBLY/ASSEMBLY
		No	Replace power seat switch. ☞ 09–13 FRONT SEAT DISASSEMBLY/ASSEMBLY

4	Rear of driver's seat does not move up or down (Other functions operate normally)		
TROUBLESHOOTING HINTS Malfunction in rear tilt motor circuit ① Power seat does not tilt at rear • Power seat switch malfunction • Rear tilt motor malfunction			
STEP	**INSPECTION**		**ACTION**
—	Inspect power seat switch. ☞ 09–13 POWER SEAT SWITCH INSPECTION Is power seat switch okay?	Yes	Replace rear tilt motor. ☞ 09–13 FRONT SEAT DISASSEMBLY/ASSEMBLY
		No	Replace power seat switch. ☞ 09–13 FRONT SEAT DISASSEMBLY/ASSEMBLY

09–01E TROUBLESHOOTING [POWER DOOR LOCK SYSTEM]

FOREWORD 09–01E–1
Flowchart 09–01E–1
KEYLESS ENTRY SYSTEM PROBLEM CHECK 09–01E–2
Keyless Entry System Problem Check Sheet 09–01E–2
KEYLESS ENTRY SYSTEM PRELIMINARY INSPECTION 09–01E–3
KEYLESS ENTRY SYSTEM ON-BOARD DIAGNOSIS 09–01E–5
On-board Diagnostic Function 1 ..... 09–01E–5
On-board Diagnostic Function 2 ..... 09–01E–6
POWER DOOR LOCK SYSTEM SYMPTOM TROUBLESHOOTING 09–01E–8
Foreword 09–01E–8
Troubleshooting Index 09–01E–8
Symptom Troubleshooting 09–01E–9

FOREWORD

W6U901W21

- When there is malfunction in power door lock system without keyless entry system, perform troubleshooting No.4—7 according to symptom.
- For malfunction in power door lock system with keyless entry system, perform preliminary inspection at first, then perform troubleshooting No.1—3 and No.8.

Flowchart

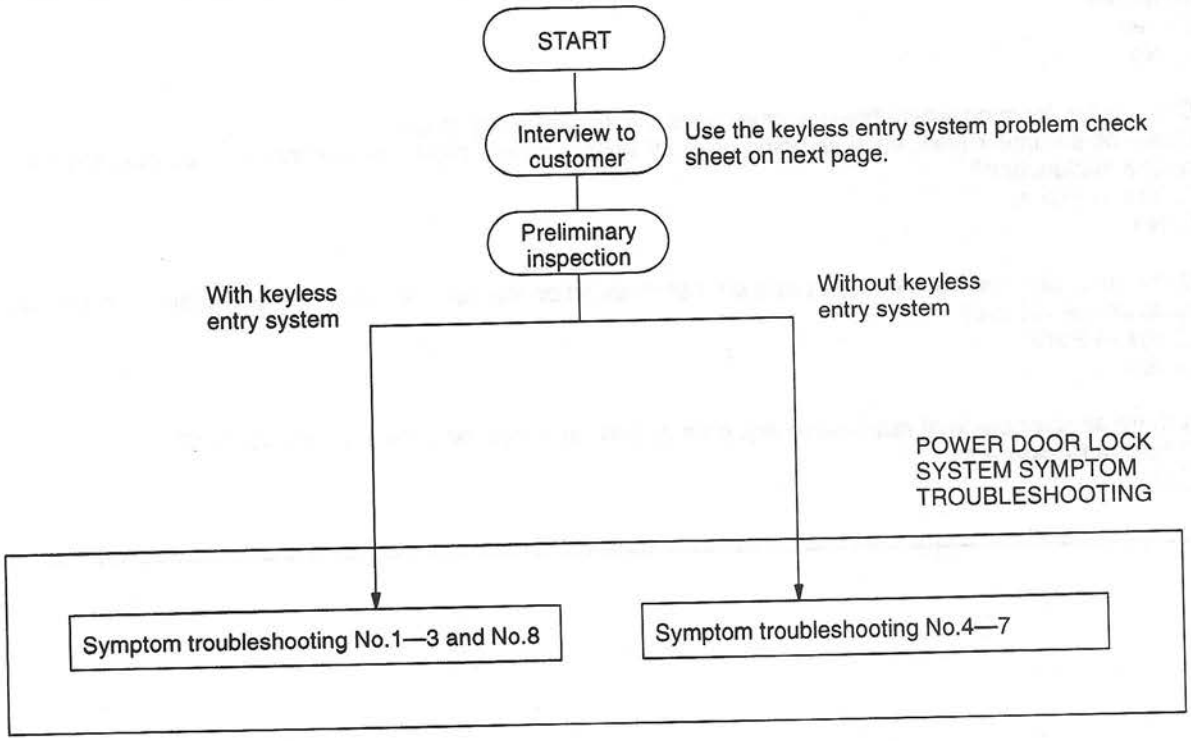

W6U901WE0

KEYLESS ENTRY SYSTEM PROBLEM CHECK

W6U901W25

Keyless Entry System Problem Check Sheet

Customer Complaint (Problem Symptom)	
First Visit or Come-back	
Problem Occurs Frequency	
Last Transmitter Battery Replacement Date	

Perform the following inspection with customer.

1. Is the system factory installed or after-market system?
   ☐ Factory Installed System
   ☐ After-market System

2. Operate the transmitter with customer within **15 m {49 ft}** of the vehicle. (Make sure the ignition key is in the LOCK position or removed.)
   Does the keyless entry system work? If works, explain correct system operations or how to operate to the customer.
   ☐ Yes
   ☐ No

3. Confirm the location where the customer uses the keyless entry system.
   Does the particular area, such as being near TV towers, power plants, power lines or factories, have an affect on the malfunction?
   ☐ Yes → Place:
   ☐ No

4. Make sure after-market electrical parts are not installed on the vehicle. Are there any after-market electrical parts on the vehicle?
   ☐ Yes → Parts:
   ☐ No

5. Is there another piece of radio-wave equipment, such as a cellular phone, on the vehicle?
   ☐ Yes → Equipment:
   ☐ No

KEYLESS ENTRY SYSTEM PRELIMINARY INSPECTION

W6U901W24

Perform the following preliminary inspection before performing the symptom troubleshooting.

STEP	INSPECTION		ACTION
1	Is system after-market system?	Yes	Perform troubleshooting according to after market keyless entry system manual.
		No	Go to next step.
2	Operate transmitter **within 15 m {49 ft}** of vehicle. Does keyless entry system work?	Yes	Make sure keyless entry system does not work from excessive distance (**more than 15 m {49 ft}** from vehicle). Explain to customer that effective range is **within 15 m {49 ft}**.
		No	• If neither door nor trunk lid do not lock or unlock with transmitter at all, operate transmitter **within 1 m {3 ft}** of vehicle. **If keyless entry system does not work:** Check transmitter battery, then go to next step. **If keyless entry system works:** Check transmitter battery. • Go to step 4 for following symptoms: Trunk lid does not unlock with transmitter. All doors do not unlock or lock with transmitter. Driver's side door only does not unlock with transmitter. • Go to step 5 for other symptoms.
3	Attempt to change transmitter ID code. Can transmitter ID code be changed?	Yes	Attempt to operate keyless entry system. **If system works:** System is normal now. **If system does not work:** Go to next step.
		No	Go to step 2 of symptom troubleshooting No.3.
4	Did customer or you use keyless entry system in particular area, such as being near TV towers, power plants, power lines or factories?	Yes	Attempt to lock or unlock doors with transmitter in non-interference area. **If system operates:** Area of operation is bad. Explain effect of outside interference on transmitter to customer. **If system does not operate:** go to next step.
		No	Go to next step.
5	Are there any after-market electrical parts on vehicle?	Yes	Disconnect after-market electrical parts connectors and attempt to lock or unlock doors with transmitter. **If system operates:** after-market electrical parts are interfering with keyless entry system. **If system does not operate:** go to next step.
		No	Go to next step.
6	Is there another piece of radio-wave equipment, such as cellular phone, on vehicle?	Yes	Disconnect radio-wave equipment connector and attempt to lock or unlock doors with transmitter. **If system operates:** radio-wave equipment is interfering with keyless entry system. **If system does not operate:** go to next step.
		No	• Go to next step for following symptoms: Neither door nor trunk lid do not lock or unlock with transmitter at all, Trunk lid does not unlock with transmitter. All doors do not unlock or lock with transmitter. Driver's side door only does not unlock with transmitter. • Go to troubleshooting index and select appropriate troubleshooting flow chart for other symptoms.
7	Perform on-board diagnostic function 1. ☞ KEYLESS ENTRY DIAGNOSTIC ON BOARD DIAGNOSIS, On-board Diagnostic Function 1 Does on-board diagnostic activate verification buzzer sound once during on-board diagnostic function 1?	Yes	Go to step 9.
		No	Go to next step.

STEP	INSPECTION		ACTION
8	Verify that following fuses are okay. • ROOM 15 A fuse • RADIO 15 A fuse • METER 10 A fuse Are all fuses okay?	Yes	Check that all door switches are installed securely on chassis. **If all door switches are installed securely:** Go to step 1 of symptom troubleshooting No.1. **If any door switch is not installed securely:** Install door switch on chassis securely. Return to step 7.
		No	Check for short to ground circuit on blown fuse's circuit. Repair or replace as necessary. Install appropriate amperage fuse.
9	Do all of following items operate sequentially **every 3 seconds** during on-board diagnostic function 1? • Trunk lid to unlock • All doors to lock • Driver's side door to unlock • All doors to unlock **Note** • Trunk lid opener unlocks simultaneously when buzzer sounds one time.	Yes	Go to step 12.
		No	Verify malfunction judgment buzzer sounds 1 time. **If buzzer sounds one time but power door lock system does not operate:** Go to next step. **If buzzer sounds one time but trunk lid does not unlock:** Go to step 11. **If buzzer sounds two times:** Go to step 14 of symptom troubleshooting No.1.
10	Operate inner door lock knob and make sure door locks and unlocks manually. Do all door's door lock systems work?	Yes	Go to step 1 of symptom troubleshooting No.2.
		No	Troubleshoot door lock linkage.
11	Does trunk lid open when trunk lid opener switch is turned on?	Yes	Check wiring harness continuity between terminal 2D at CPU connector and trunk lid opener switch. If wiring harness is OK, go to step 1 of symptom troubleshooting No.2.
		No	Go to step 1 of symptom troubleshooting No.2.
12	Perform on-board diagnostic function 2. ☞ KEYLESS ENTRY DIAGNOSTIC ON BOARD DIAGNOSIS, On-board Diagnostic Function 2 Does number of buzzer sound 4 times on all three tests (LOCK, UNLOCK and TRUNK signal inspections)?	Yes	System is normal.
		No	**If buzzer sounds two times:** Replace keyless unit. **If buzzer sounds three times on all three tests:** Go to step 1 of symptom troubleshooting No.3. **If buzzer sounds combination of three and four times:** Replace transmitter.

KEYLESS ENTRY SYSTEM ON-BOARD DIAGNOSIS

W6U901W22

- There are two functions for the keyless entry system on-board diagnosis (OBD). OBD function 1 tells the keyless unit and CPU to activate the power door lock and trunk lid opener systems without the transmitter. OBD function 2 monitors a keyless entry demand signal sent from the transmitter and used inside the keyless unit. OBD function 2 diagnoses the transmitter, integrated antenna and the keyless unit.

On-board Diagnostic Function 1

- Before performing troubleshooting, conduct the following procedure.

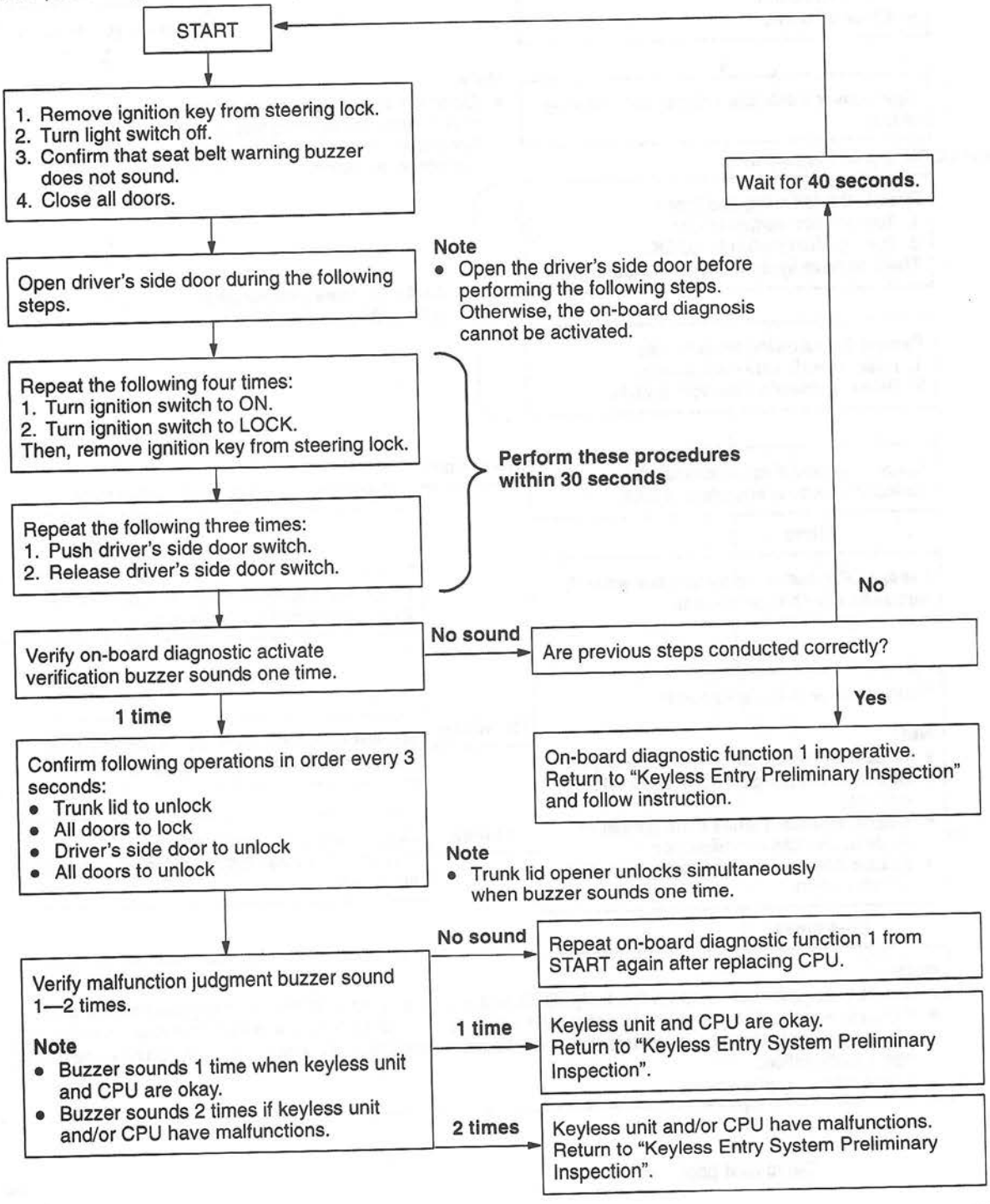

W6U901WE1

On-board Diagnostic Function 2

- Before performing troubleshooting, conduct the following procedure.

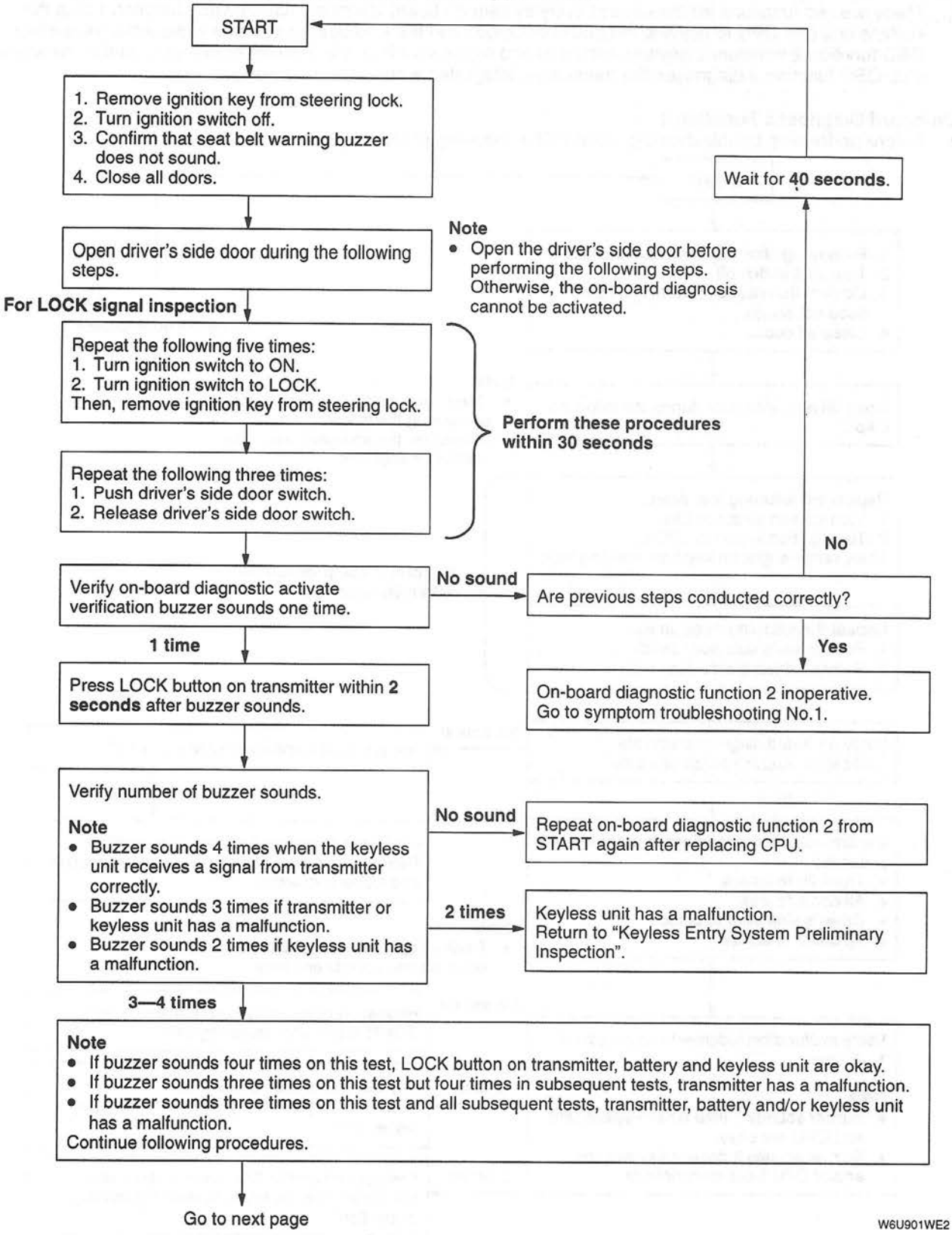

W6U901WE2

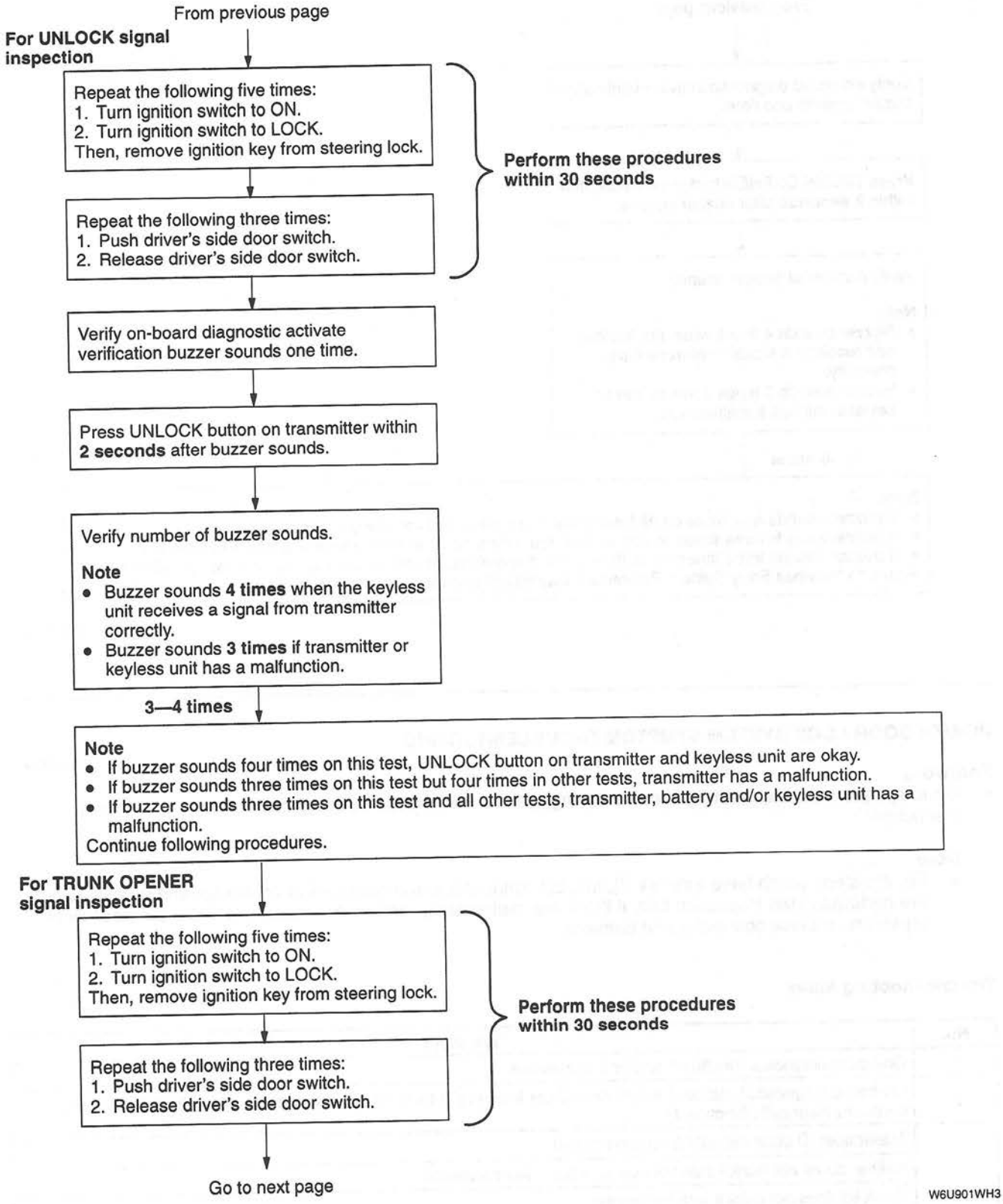
From previous page
For UNLOCK signal inspection
Repeat the following five times:
1. Turn ignition switch to ON.
2. Turn ignition switch to LOCK.
Then, remove ignition key from steering lock.
Repeat the following three times:
1. Push driver's side door switch.
2. Release driver's side door switch.
Perform these procedures within 30 seconds
Verify on-board diagnostic activate verification buzzer sounds one time.
Press UNLOCK button on transmitter within 2 seconds after buzzer sounds.
Verify number of buzzer sounds.
Note
• Buzzer sounds 4 times when the keyless unit receives a signal from transmitter correctly.
• Buzzer sounds 3 times if transmitter or keyless unit has a malfunction.
3—4 times
Note
• If buzzer sounds four times on this test, UNLOCK button on transmitter and keyless unit are okay.
• If buzzer sounds three times on this test but four times in other tests, transmitter has a malfunction.
• If buzzer sounds three times on this test and all other tests, transmitter, battery and/or keyless unit has a malfunction.
Continue following procedures.
For TRUNK OPENER signal inspection
Repeat the following five times:
1. Turn ignition switch to ON.
2. Turn ignition switch to LOCK.
Then, remove ignition key from steering lock.
Repeat the following three times:
1. Push driver's side door switch.
2. Release driver's side door switch.
Perform these procedures within 30 seconds
Go to next page

W6U901WH3

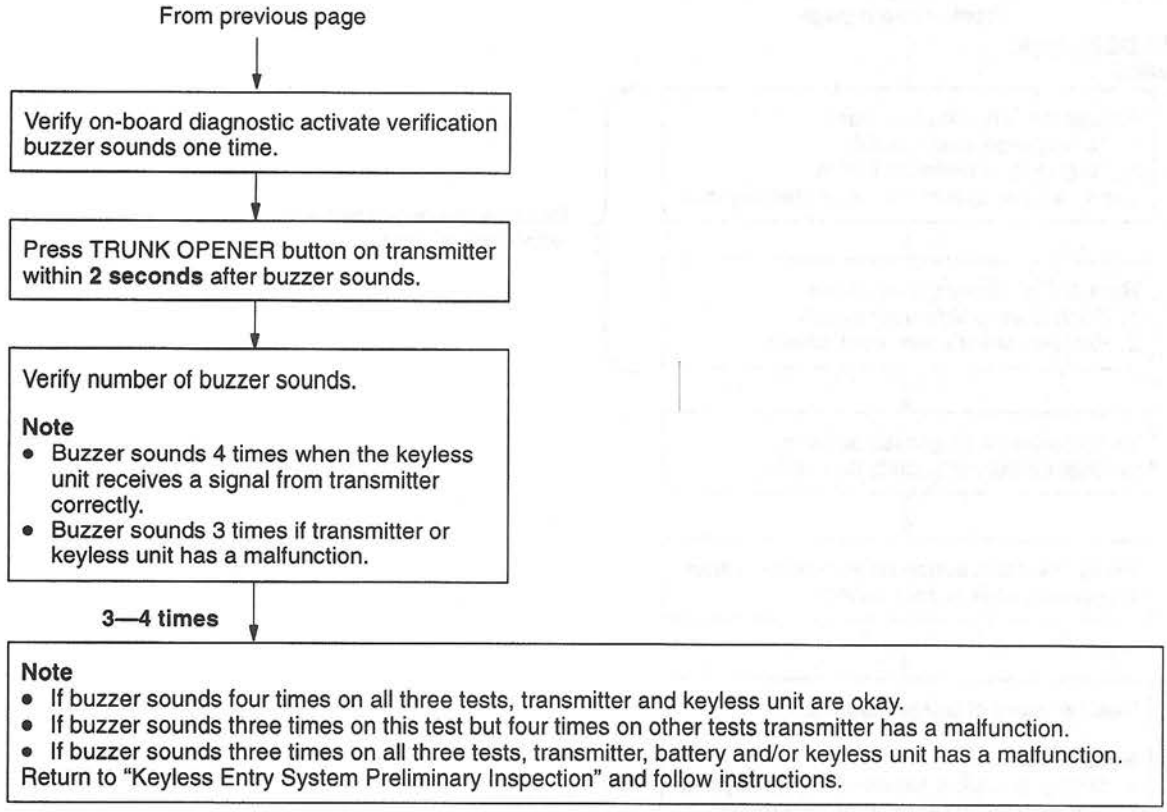

W6U901WH4

POWER DOOR LOCK SYSTEM SYMPTOM TROUBLESHOOTING

W6U901W23

Foreword

- Go to symptom troubleshooting after identifying specific malfunction by doing keyless entry preliminary inspection.

Note

- For the steps which have asterisk (*), inspect connections and damages of connector and terminal which are performing the inspection first. If there are malfunction, connect connector and terminal securely or repair and replace connector and terminal.

Troubleshooting Index

No.	Symptom
1	On-board diagnostic function 1 and/or 2 inoperative
2	On-board diagnostic function 1 inoperative (Door lock and/or trunk lid opener systems do not lock or unlock in on-board diagnostic function 1)
3	Transmitter ID code cannot be reprogrammed
	Neither doors not trunk lid do not lock or unlock with transmitter
	Trunk lid does not unlock with transmitter
	All doors do not unlock or lock with transmitter
	Driver's side door does not unlock with transmitter
4	Power door lock system does not lock or unlock
5	Passenger's side and rear power door lock systems do not lock or unlock (Driver's side door lock system is okay)
6	Driver's side power door lock system does not lock or unlock (Passenger's side and rear power door lock systems are okay)

No.	Symptom
7	Trunk lid opener does not unlock with trunk lid opener switch (Power door lock system is okay)
8	Door lock monitor inoperative

Symptom Troubleshooting

1	On-board diagnostic function 1 and/or 2 inoperative		
TROUBLESHOOTING HINTS ① Door switches and related wiring harness malfunctions ② Keyless unit malfunction ③ CPU malfunction ④ Open or short circuit between keyless unit connector terminal E and CPU connector terminal 2O ⑤ Poor ground for keyless unit and/or CPU			
STEP	**INSPECTION**		**ACTION**
1	Is CPU installed to joint box securely?	Yes	Remove CPU from joint box. Then go to next step.
		No	Install CPU to joint box securely. Confirm on-board diagnostic function 1 activation.
2	Turn ignition switch off. Open driver's side door only. Make sure that passenger's side and rear doors are closed. Check continuity between joint box terminal 1I and ground. Is there continuity? 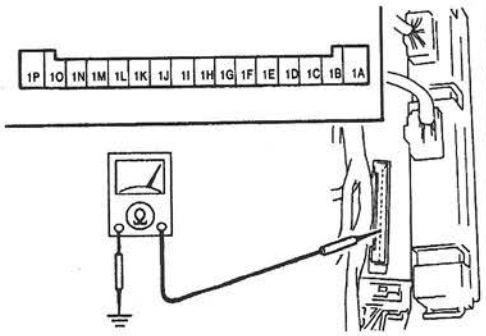 W6U901WH0	Yes	Go to next step.
		No	Check door switch. If door switch is okay, check for open circuit between joint box terminal 1I and driver's side door switch.
3	Push driver's side door switch. Is there continuity between joint box terminal 1I and ground?	Yes	Check door switches. If door switches are okay, check for short to ground circuit between joint box terminal 1I and each door switch.
		No	Go to next step.
4	Is there continuity between joint box terminal 1G and ground? 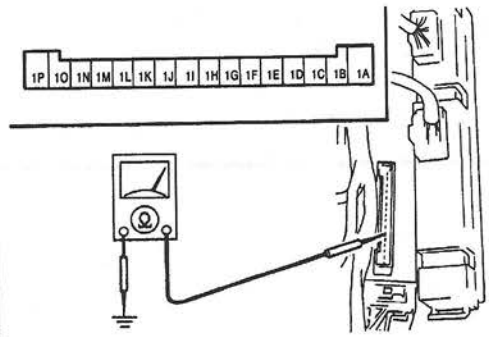 W6U901WH1	Yes	Go to next step.
		No	Repair ground.

STEP	INSPECTION		ACTION
5	Measure voltage at joint box terminals 1C and 1J. **Terminal 1C: B+ (IG ON), 0 V (IG LOCK)** **Terminal 1J: B+ (constantly)** Are voltages okay? 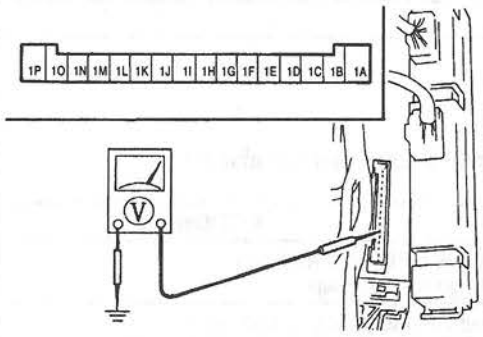 W6U901WH2	Yes	Turn ignition switch off and install CPU to joint box securely. If on-board diagnostic function 1 is inoperative, go to next step. If on-board diagnostic function 2 is inoperative, go to step 7.
		No	Check ignition switch. If it is okay, check for open circuit between fuse panel and joint box terminal 1C or 1J.
6	Make sure that driver's side door is open. Connect volt-meter between CPU connector terminal 2O and ground. Perform following procedures **within 30 seconds**: ① Repeat following four times: • Turn ignition switch ON. • Turn ignition switch LOCK. ② Remove ignition key from steering lock. ③ Repeat following three times: • Push driver's side door switch. • Release driver's side door switch. Measure voltage at CPU connector terminal 2O. • **5 V (during performing the above procedures) → 0 V (until on-board diagnostic activate verification buzzer sounds)** Is voltage **0 V**? 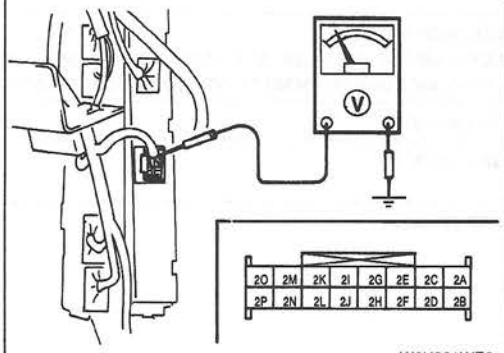 W6U901WE3	Yes	Go to step 8.
		No	Visually check for bents or other damage to CPU connector terminals. If terminals are okay, replace CPU.

STEP	INSPECTION		ACTION
7	Make sure that driver's side door is opened. Connect volt-meter between CPU connector terminal 2O and ground. Perform following procedures **within 30 seconds**: ① Repeat following five times: • Turn ignition switch to ON. • Turn ignition switch to LOCK. ② Remove ignition key from steering lock. ③ Repeat following three times: • Push driver's side door switch. • Release driver's side door switch. Measure voltage at CPU connector terminal 2O. • **5 V (during performing the above procedures) → 0 V (until on-board diagnostic activate verification buzzer sounds)** Is voltage **0 V**? 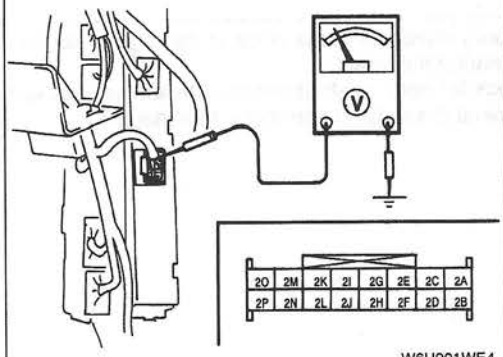 W6U901WE4	Yes	Go to next step.
		No	Visually check for bents or other damage to CPU connector terminals. If terminals are okay, replace CPU.
8	Turn ignition switch to ON. Connect jumper wire between CPU connector terminal 2O and ground. Does buzzer sound?	Yes	Replace CPU.
		No	Disconnect keyless unit connector. Go to next step.
9	Turn ignition switch to LOCK. Is there continuity between keyless unit connector B terminal and ground? 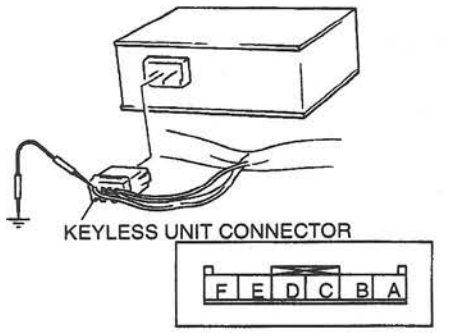 W6U901WE5	Yes	Go to next step.
		No	Repair ground.
10	Connect keyless unit connector. Turn ignition switch ON. Measure voltage at keyless unit connector terminal A. Is voltage **B+**?	Yes	If on-board diagnostic function 1 is inoperative, go to next step. If on-board diagnostic function 2 is inoperative, go to step 12.
		No	Check for open circuit between fuse panel and keyless unit connector terminal A.

STEP	INSPECTION		ACTION
11	Make sure that driver's side door is opened. Connect keyless unit connector. Connect volt-meter between keyless connector terminal E and ground. Perform following procedures **within 30 seconds**: ① Repeat following four times: • Turn ignition switch to ON. • Turn ignition switch to LOCK. ② Remove ignition key from steering lock. ③ Repeat following three times: • Push driver's side door switch. • Release driver's side door switch. Measure voltage at keyless unit connector terminal E. • **5 V (during performing the above procedures) → 0 V (until on-board diagnostic activate verification buzzer sounds)** Is voltage **0 V**? 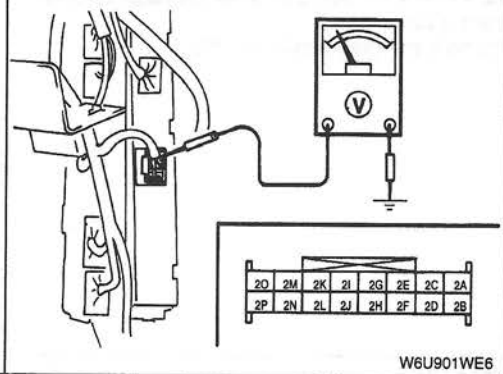 W6U901WE6	Yes	Go to step 13.
		No	Visually check for bents or other damage to keyless unit connector terminals. Check for open or short circuit between keyless unit terminal E and CPU connector terminal 2O.

STEP	INSPECTION		ACTION
12	Make sure that driver's side door is opened. Connect keyless unit connector. Connect volt-meter between keyless connector terminal E and ground. Perform following procedures **within 30 seconds:** ① Repeat following five times: • Turn ignition switch to ON. • Turn ignition switch to LOCK. ② Remove ignition key from steering lock. ③ Repeat following three times: • Push driver's side door switch. • Release driver's side door switch. Measure voltage at keyless unit connector terminal E. • **5 V (during performing the above procedures) → 0 V (until on-board diagnostic activate verification buzzer sounds)** Is voltage **0 V**? 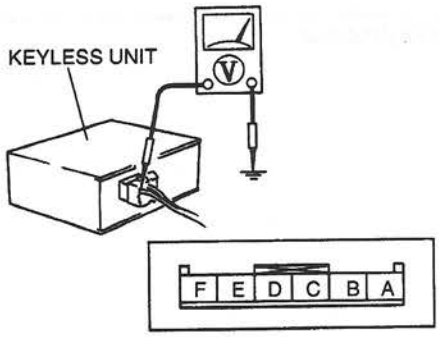 W6U901WE7	Yes	Go to next step.
		No	Visually check for bents or other damage to keyless unit connector terminals. Check for open or short circuit between keyless unit terminal E and CPU connector terminal 2O.
13	Attempt to activate on-board diagnostic function 1 or 2 again. Does on-board diagnostic function 1 or 2 activate?	Yes	On-board diagnostic is operative now.
		No	Replace keyless unit.

STEP	INSPECTION		ACTION
14	Make sure that driver's side door is opened. Connect volt-meter between keyless connector terminal E and ground. Perform following procedures **within 30 seconds:** ① Repeat following four times: • Turn ignition switch to ON. • Turn ignition switch to LOCK. ② Remove ignition key from steering lock. ③ Repeat following three times: • Push driver's side door switch. • Release driver's side door switch. Measure voltage at keyless unit connector terminal E. • **5 V → 0 V (during on-board diagnostic activate verification buzzer sounds)** • **5 V → 3.5 V (3 seconds later after buzzer sounded)** • **5 V → 1.7 V (6 and 9 seconds later after buzzer sounded)** Are voltages okay? 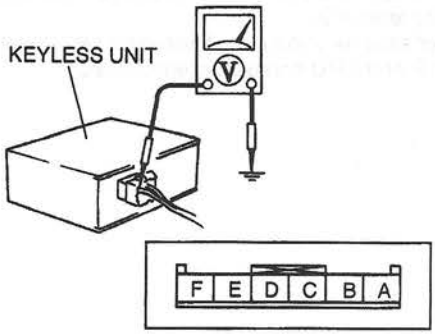 W6U901WE8	Yes	Verify buzzer sounds 1 time. If not, replace CPU.
		No	Replace keyless unit.

2	**On-board diagnostic function 1 inoperative (Door lock and/or trunk lid opener system does not lock or unlock during on-board diagnostic function 1)**
TROUBLESHOOTING HINTS ① Keyless unit malfunction ② CPU malfunction ③ Power door lock system malfunction	

STEP	INSPECTION		ACTION
1	**Note** • Monitor voltage at keyless unit connector terminal E while performing on-board diagnostic function 1. • Did malfunction judgment buzzer in on-board diagnostic function 1 sound one time? 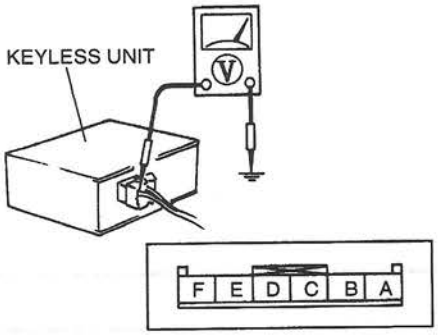 W6U901WE9	Yes	If driver's side door does not unlock, go to next step. If passenger's side and rear doors do not unlock, go to step 3. If no doors lock, go to step 4.
		No	Is voltage at keyless unit connector terminal E okay? • **0 V (during on-board diagnostic activate verification buzzer sounds)** • **3.5 V (after 3 seconds after buzzer sounded)** • **1.7 V (after 6 seconds after buzzer sounded)** • **1.7 V (after 9 seconds after buzzer sounded)** If voltage is okay, replace CPU. If voltage is not okay, replace keyless unit.
2	Turn ignition switch to ON. Connect jumper wire between CPU connector 2F terminal and ground. Does driver's side door unlock? 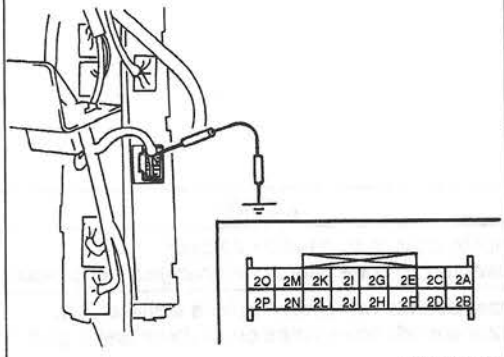 W6U901WEA	Yes	Check CPU. (terminal 2F)
		No	Go to symptom troubleshooting No.6.
3	Turn ignition switch to ON. Connect jumper wire between CPU connector 2H terminal and ground. Do passenger's side and rear doors unlock? 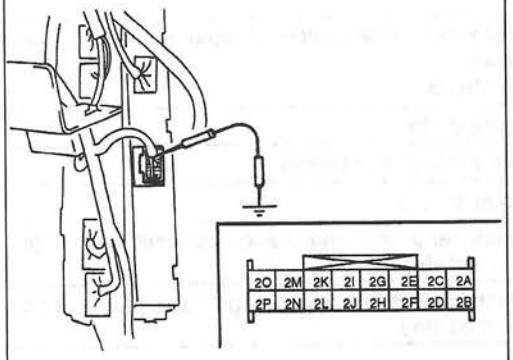 W6U901WEB	Yes	Check CPU. (terminal 2H)
		No	Go to symptom troubleshooting No.5.

STEP	INSPECTION		ACTION
4	Turn ignition switch to ON. Connect jumper wire between CPU connector 2B terminal and ground. Do all doors lock? 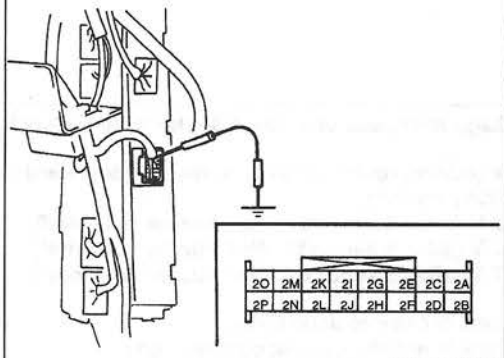 W6U901WEC	Yes	Check CPU. (terminal 2B)
		No	Go to symptom troubleshooting No.4.

3	• **Transmitter ID code cannot be reprogrammed** • **Neither doors nor trunk lid opener systems do not lock or unlock with transmitter** • **Trunk lid opener does not unlock with transmitter** • **All doors do not unlock or lock with transmitter** • **Driver's side door does not unlock with transmitter**

TROUBLESHOOTING HINTS
① Keyless unit malfunction
② CPU malfunction
③ Transmitter and/or battery malfunction

Note
- If transmitter ID code cannot be reprogrammed, go to step 2.
- For other symptoms, go to step 1.

STEP	INSPECTION		ACTION
1	Perform on-board diagnostic function 2. Does buzzer sound four times on LOCK, UNLOCK, and TRUNK OPENER signal tests?	Yes	Attempt to change transmitter ID code. If transmitter ID code cannot be changed, go to next step.
		No	If buzzer sounds two times, replace keyless unit. If buzzer sounds three times on all three tests, go to step 5. For different number of buzzer sounds, go to next step.
2	Visually inspect transmitter battery. Are following items okay? • Transmitter battery installation (correct polarity) • Battery type (CR2025)	Yes	Go to next step.
		No	Set transmitter battery properly or replace with specified transmitter battery. (CR2025) Go to step 6.
3	Visually inspect transmitter. Is there rust on transmitter battery terminal or poor connection between battery terminal and battery?	Yes	Replace transmitter battery or repair transmitter battery terminal. Go to step 6.
		No	Go to next step.
4	Replace known good transmitter battery. Does keyless entry system operate properly?	Yes	Replace transmitter battery.
		No	Go to next step.
5	Change transmitter ID code by using another known good transmitter. Does keyless entry system operate properly?	Yes	Replace transmitter and change transmitter ID code. Go to next step.
		No	Replace keyless unit and change transmitter ID code. Go to next step.

STEP	INSPECTION		ACTION
6	Does keyless entry system operate properly?	Yes	Troubleshooting is completed.
		No	If power door lock system does not lock or unlock, go to symptom troubleshooting No.4. If passenger's side and rear doors do not lock or unlock, go to symptom troubleshooting No.5. If driver's side door does not lock or unlock, go to symptom troubleshooting No.6. If trunk lid opener does not lock or unlock, go to symptom troubleshooting No.7.

4 Power door lock system does not lock or unlock.

TROUBLESHOOTING HINTS

Malfunction in CPU power supply/ground circuit
① Power door lock system does not function
- ROOM 15 A fuse malfunction
- CPU malfunction
- Malfunction in wiring harness between ROOM 15 A fuse and CPU
- Malfunction in wiring harness between CPU and ground

Malfunction in door lock timer unit 1 and door lock timer unit 2 power supply/ground circuit
① Power door lock system does not function
- D.LOCK 30 A fuse malfunction
- Malfunction in wiring harness between D.LOCK 30 A fuse and door lock timer unit 1 or door lock timer unit 2

Malfunction in power door lock system input signal circuit
① Power door lock system does not function
- CPU malfunction
- Door lock switch malfunction
- Malfunction in wiring harness between CPU and door lock switch
- Malfunction in wiring harness between door lock switch and ground

Malfunction in power door lock system operation circuit
① Power door lock system does not function
- CPU malfunction

STEP	INSPECTION		ACTION
1	Are ROOM 15 A fuse and D.LOCK 30 A fuse okay? 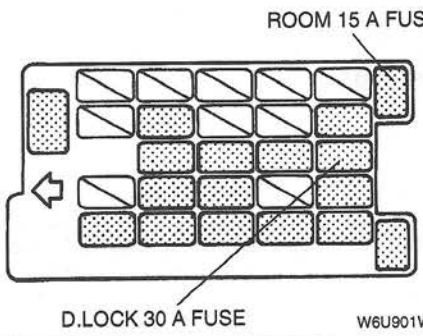	Yes	Go to next step.
		No	Repairing wiring harness. Replace fuse.
2	Remove driver's side front door trim. Disconnect door lock switch connector. Measure voltage at door lock switch connector terminal A? Is voltage **5 V**? 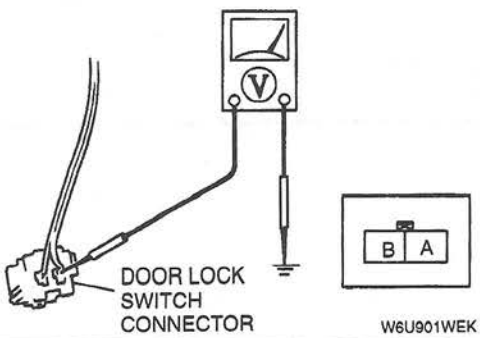	Yes	Go to next step.
		No	Go to step 6.

STEP	INSPECTION		ACTION
3	Inspect door lock switch. ☞ 09–14 DOOR LOCK SWITCH INSPECTION Is door lock switch okay?	Yes	Go to next step and reconnect door lock switch connector.
		No	Replace door lock switch.
4	Check for continuity between terminal B at door lock switch connector and ground? Is there continuity? 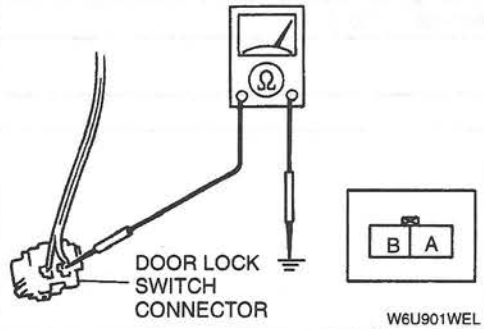	Yes	Go to next step.
		No	Repair wiring harness between door lock switch and ground.
5	Check for continuity between D.LOCK 30 A fuse and terminal C at door lock timer unit 1 connector and terminal C at door lock timer unit 2 connector? Is there continuity? 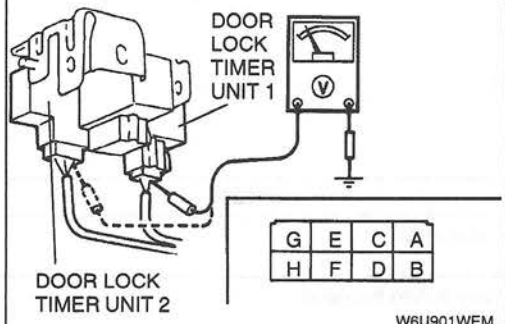	Yes	Check for open or short circuit between terminal D at door lock timer unit 1 and terminal B at door lock actuator. When there is continuity, replace CPU.
		No	Repair wiring harness between D.LOCK 30 A fuse and door lock timer unit 1 or door lock timer unit 2.
6	Remove driver's side front scuff plate. Remove driver's side front side trim. Remove nut fixed in joint box and remove CPU from joint box. Measure voltage at joint box terminal 1J? Is voltage **B+**? 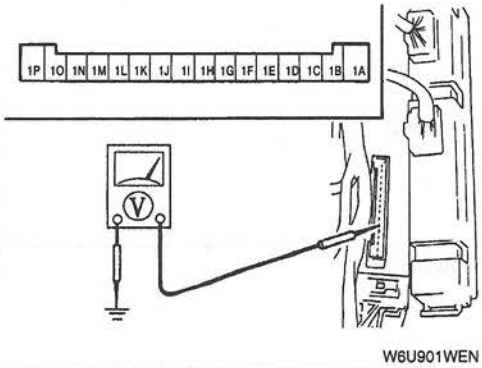	Yes	Go to next step.
		No	Repair wiring harness between ROOM 15 A fuse and CPU.

STEP	INSPECTION		ACTION
7	Check for continuity between terminal 1G at joint box and ground? Is the continuity? 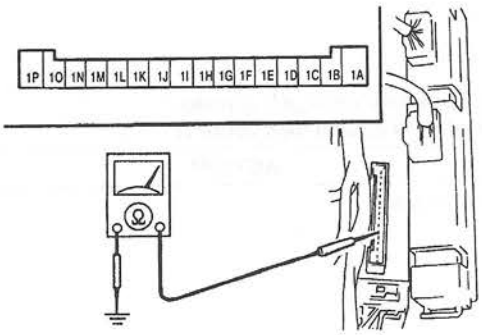 W6U901WEP	Yes	Go to next step.
		No	Repair wiring harness between CPU and ground.
8	Measure voltage at joint box terminal 1K? Is voltage **5 V**? 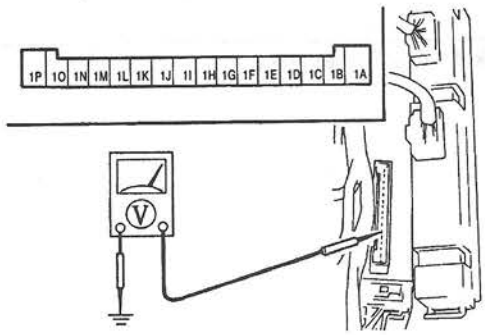 W6U901WEQ	Yes	Repair wiring harness between door lock switch and CPU.
		No	Replace CPU.

5	**Passenger's side and rear side power door lock systems do not lock or unlock (Driver's side door lock system is okay).**

TROUBLESHOOTING HINTS
Malfunction in power door lock system operation circuit
① Passenger's side and rear side power door lock systems do not function
- Door lock timer unit 1 malfunction
- Malfunction in wiring harness between door lock timer unit 1 and door lock actuator

STEP	INSPECTION		ACTION
—	Remove passenger's side front door trim. Partially peel off passenger's side door screen. Check for continuity between terminal A at passenger's side door lock actuator connector and terminal G at door lock timer unit 1 connector? Is there continuity? 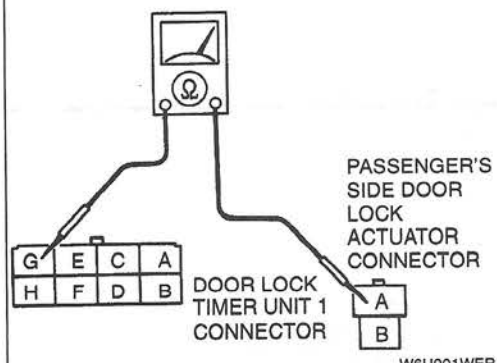 W6U901WER	Yes	If passenger's side and rear side power door lock systems do not unlock, check for open circuit between CPU connector 2H terminal and door lock timer unit 1E terminal. If there is open circuit, repair wiring harness. If there is continuity, replace door lock timer unit 1. For other symptoms, replace door lock timer unit 1.
		No	Repair wiring harness between door lock timer unit 1 and passenger's side door lock actuator.

6	**Driver's side power door lock system does not lock or unlock (Passenger's side and rear side power door lock system are okay).**

TROUBLESHOOTING HINTS
Malfunction in power door lock system operation circuit
① Driver's side power door lock system does not function
- Door lock timer unit 2 malfunction
- Driver's side door lock actuator malfunction
- Malfunction in wiring harness between door lock timer unit 1 and driver's side door lock actuator
- Malfunction in wiring harness between door lock timer unit 2 and driver's side door lock actuator

STEP	INSPECTION		ACTION
1	**Note** • If driver's side door lock system does not unlock with transmitter only, replace CPU. Remove driver's side side panel. Remove lower panel. Is voltage at door lock timer unit 2 connector terminal G as follows? • Door lock switch to unlock: **0 V → B+ → 0 V** • Other: **0 V** 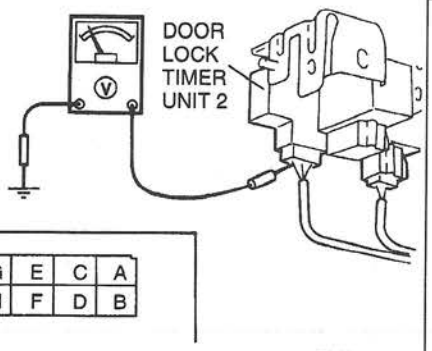	Yes	Go to next step.
		No	Check door lock timer unit 2.
2	Remove driver's side door trim. Partially remove driver's side door screen. Is voltage at driver's side door lock actuator connector terminal A as follows? • Door lock switch to unlock: **0 V → B+ → 0 V** • Other: **0 V** 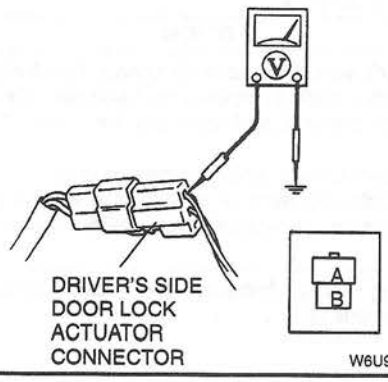	Yes	Go to next step.
		No	Repair wiring harness between door lock timer unit 2 and driver's side door lock actuator.

STEP	INSPECTION		ACTION
3	Is voltage at driver's side door lock actuator connector terminal B as follows? • Door lock switch to unlock: **0 V → B+ → 0 V** • Other: **0 V** 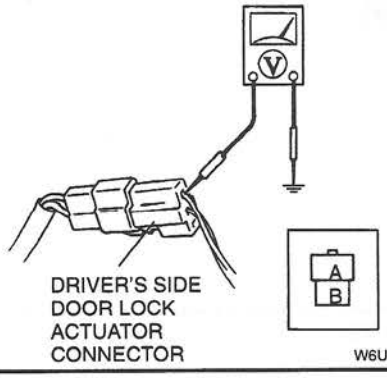	Yes	Replace door lock actuator.
		No	Repair wiring harness between door lock timer unit 1 and driver's side door lock actuator.

7	**Trunk lid does not unlock with trunk lid opener switch (Power door lock system is okay).**

TROUBLESHOOTING HINTS

Malfunction in trunk lid unlock system input signal circuit

① Trunk lid does not unlock with trunk lid opener switch
- Door lock timer unit 2 malfunction
- Trunk lid opener switch malfunction
- Malfunction in wiring harness between door lock timer unit 2 and trunk lid opener switch
- Malfunction in wiring harness between trunk lid opener switch and ground

Malfunction in trunk lid lock actuator operation circuit

① Trunk lid does not unlock with trunk lid opener switch
- Trunk lid lock actuator malfunction
- Door lock timer unit 2 malfunction
- Malfunction in wiring harness between door lock timer unit 2 and trunk lid lock actuator
- Malfunction in wiring harness between trunk lid lock actuator and ground

STEP	INSPECTION		ACTION
1	Remove driver's side side panel. Remove lower panel. Measure voltage at door lock timer unit 2 connector terminal 2B with trunk lid opener switch at neutral? Is voltage **B+**? 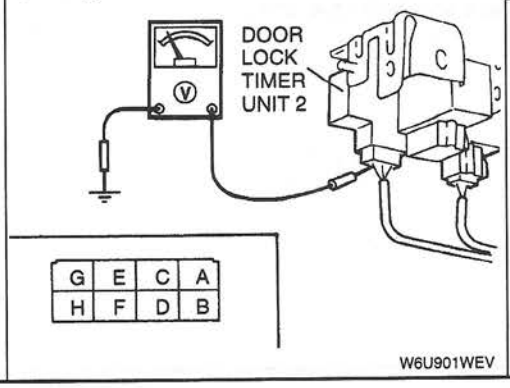	Yes	Go to next step.
		No	Replace door lock timer unit 2.

STEP	INSPECTION		ACTION
2	Remove trunk lid opener switch. Measure voltage at trunk lid opener switch connector terminal A. Is voltage **B+**? 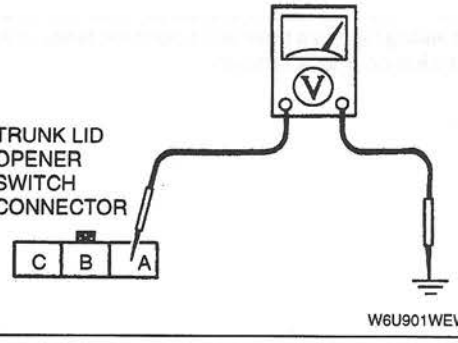	Yes	Go to next step.
		No	Repair wiring harness door lock timer unit 2 and trunk lid opener switch.
3	Inspect trunk lid opener switch. ☞ 09–14 TRUNK LID OPENER SWITCH INSPECTION Is trunk lid opener switch okay?	Yes	Go to next step.
		No	Replace trunk lid opener switch.
4	Check for continuity between terminal B at trunk lid opener switch connector and ground? Is there continuity? 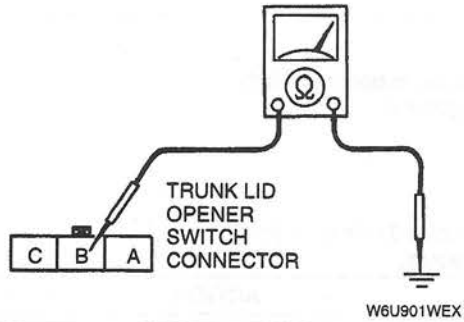	Yes	Go to next step.
		No	Repair wiring harness between trunk lid opener switch and ground.
5	Is voltage at door lock timer unit 2 connector terminal D as follows? • Trunk lid opener switch in unlock position: **0 V → B+ → 0 V** • Other: **0 V** 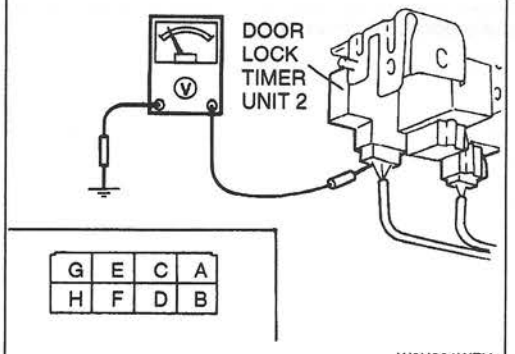	Yes	Go to next step.
		No	Replace door lock timer unit 2.

STEP	INSPECTION		ACTION
6	Is voltage at trunk lid lock actuator connector terminal A as follows? • Trunk opener switch in unlock position: **0 V → B+ → 0 V** • Other: **0 V** 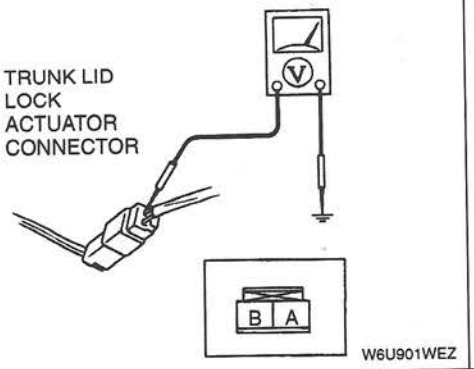	Yes	Go to next step.
		No	Repair wiring harness between door lock timer unit 2 and trunk lid lock actuator.
7	Inspect trunk lid lock actuator. ☞ 09–14 TRUNK LID LOCK ACTUATOR INSPECTION Is trunk lid lock actuator okay?	Yes	Repair wiring harness between trunk lid lock actuator and ground.
		No	Replace trunk lid lock actuator.

8	**Door lock monitor inoperative**

TROUBLESHOOTING HINTS
① CPU malfunction
② Horn system malfunction
③ Open circuit between CPU connector terminal 2A and horn relay

Note
• Horn sounds once as a part of door lock monitor function system when lock button on transmitter is depressed two times within approximately 5 seconds.

STEP	INSPECTION		ACTION
1	Does horn sound when depressing horn switch on vehicle?	Yes	Go to next step.
		No	Check horn relay, horn and horn switch.
2	Measure voltage at CPU connector terminal 2A after depressing lock button on transmitter two times **within 5 seconds**. Is voltage okay? • **12 V → 0 V → 12 V** 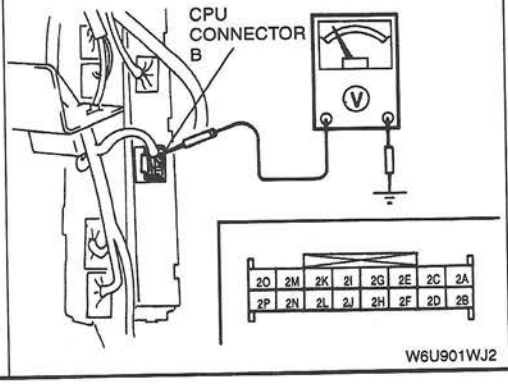	Yes	Check for open circuit between CPU connector terminal 2A and horn relay.
		No	Replace CPU.

09–01F TROUBLESHOOTING [IMMOBILIZER SYSTEM]

IMMOBILIZER SYSTEM ON-BOARD DIAGNOSIS 09–01F–1
Diagnostic Trouble Code 09–01F–1
Diagnostic Trouble Code Table 09–01F–1
Inspection of Diagnostic Trouble Codes 09–01F–3

IMMOBILIZER SYSTEM ON-BOARD DIAGNOSIS

W6U901W26

Diagnostic Trouble Code

Caution

- **When engine does not start or engine stalls and the following DTCs are not indicated, go to engine symptom troubleshooting. (Refer to 01–01A ENGINE SYMPTOM TROUBLESHOOTING [FS].) (Refer to 01–01B ENGINE SYMPTOM TROUBLESHOOTING [KL].)**

Note

- When the immobilizer system is defective, the engine starts once and soon stalls after turning the starter for the first three times. For the forth time or after, the engine can not be started.
- If engine condition is normal but light stays on, inspect for short circuit between security light and immobilizer unit connector terminal M.
  Repair or replace the wiring harness if necessary.

1. Turn the ignition switch to START for 2 seconds, then back to ON.
2. Wait for **2 minutes**.
3. Verify the security light condition and read the DTC if indicated.
4. Verify the DTC with NGS or equivalent.
5. If the DTC is indicated, go to troubleshooting referring to the diagnostic trouble code table.

Diagnostic Trouble Code Table
DTC indicated by immobilizer unit

DTC	Output pattern	Description
01	 W6U914WBC	ID number unregistered in immobilizer unit is input after engine cranking
02	 W6U914WBD	ID number format error (voltage range, frequency)
03	 W6U914WBE	ID number is not input into immobilizer unit after engine cranking
11	 W6U914WBF	Coil or wiring harness between immobilizer unit and coil is open circuit
21	 W6U914WBG	Code word/ID number memorized in immobilizer unit EEPROM can not be read
24	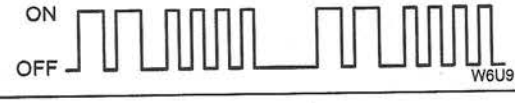 W6U914WBH	Wiring harness between immobilizer unit and PCM is open or short circuit
30	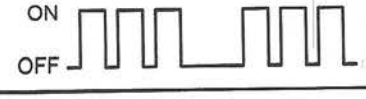 W6U914WBJ	Immobilizer unit—PCM communication error

DTC indicated by PCM

DTC No.	Condition	MIL
P1602	Immobilizer unit — PCM communication error	OFF
P1603	Code word unregistered in PCM	OFF
P1604	Key ID number unregistered in PCM	OFF
P1621	Code word does not match after engine cranking	OFF
P1622	Key ID number does not match	OFF
P1623	Code word or key ID number write/read error in PCM	OFF
P1624	Immobilizer system communication counter = 0	OFF

DTC indications after 4th engine cranking under immobilizer system malfunctions (Reference)

Note
- When the following malfunctions occur on the immobilizer system, DTC(s) will be indicated as follows.
- These are not all potential malfunctions.

Malfunctions		01	02	03	11	21	24	30	P1602	P1603	P1604	P1621	P1622	P1623	P1624
Open circuit	IU-PCM								3						3
	IU-Ground								3						3
	IU-Coil			1	1				3						1
	IU-Battery	Engine runs normally and no DTC is indicated.													
	IU-Ignition switch	Engine runs normally and no DTC is indicated.													
	IU-Battery and IU-Ignition switch								2						2
	IU-Security light	Engine runs normally and no DTC is indicated. No security light illumination after cranking.													
Short circuit	IU-PCM								1						1
	IU-Coil								3						3
	IU-Security light	Engine runs normally and no DTC is indicated. Security light illuminates at all key positions.													
Code word mismatch (IU-PCM)												1			1
Key without transponder				1					2						1
Unregistered key		1							2						1

1 : DTC is indicated after clearing DTC by NGS.

2 : DTC is indicated after clearing DTC by NGS and turning key to ON.

3 : DTC is indicated after clearing DTC by NGS and cranking the engine.

Inspection of Diagnostic Trouble Codes

Note

- When the DTC is indicated by PCM, go to the engine on-board diagnosis. (Refer to 01–01A ENGINE ON-BOARD DIAGNOSIS [FS].) (Refer to 01–01B ENGINE ON-BOARD DIAGNOSIS [KL].)
- When the terminal voltage specification is required to diagnose the immobilizer system, refer to 09–14 IMMOBILIZER UNIT INSPECTION.
- When the system wiring diagram is required, refer to the figure below.

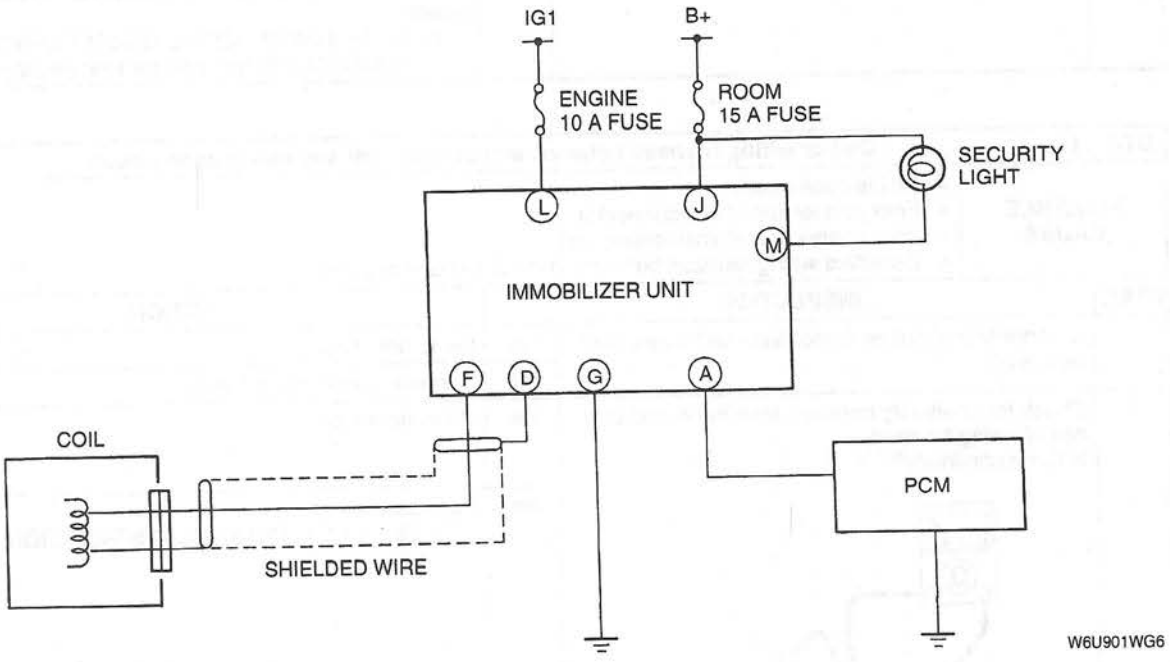

DTC 01	ID number unregistered in immobilizer unit is input after engine cranking		
POSSIBLE CAUSE	• ID number is unregistered in immobilizer unit		
STEP	INSPECTION		ACTION
—	—	—	Go to ID number input procedure. ☞ 09–14 IMMOBILIZER SYSTEM REPROGRAM PROCEDURE, Key Replacement or Addition

DTC 02	ID number format error (voltage range, freguency)		
POSSIBLE CAUSE	• Defective transponder in the key		
STEP	INSPECTION		ACTION
—	—	—	Dispose defective key. Duplicate key if necessary. ☞ 09–14 IMMOBILIZER SYSTEM REPROGRAM PROCEDURE, Key Replacement or Addition

DTC 03	ID number is not input into immobilizer unit after engine cranking		
POSSIBLE CAUSE	• No transponder in the key • Defective transponder in the key (ID number is not output) • Defective coil at steering lock • Defective wiring harness between coil and immobilizer unit		
STEP	INSPECTION		ACTION
1	Does security light indicate DTC 11?	Yes	Go to DTC 11 of diagnostic trouble code table.
		No	Go to next step.

STEP	INSPECTION		ACTION
2	Does security light indicate DTC 30?	Yes	Go to DTC 30 of diagnostic trouble code table.
		No	Go to next step.
3	Does engine start with other proper keys?	Yes	Dispose defective key. Duplicate key if necessary. ☞ 09–14 IMMOBILIZER SYSTEM REPROGRAM PROCEDURE, Key Replacement or Addition
		No	Replace immobilizer unit and reprogram immobilizer system. ☞ 09–14 IMMOBILIZER SYSTEM REPROGRAM PROCEDURE, Immobilizer Unit Replacement

DTC 11	Coil or wiring harness between immobilizer unit and coil is open circuit
POSSIBLE CAUSE	• Coil is open circuit • Poor connection of coil connector • Poor connection of immobilizer unit • Defective wiring harness between immobilizer unit and coil

STEP	INSPECTION		ACTION
1	Is connector of coil or immobilizer unit connected securely?	Yes	Go to next step.
		No	Connect connector securely.
2	Check for continuity between terminal A and B at coil of wiring harness. Is there continuity? 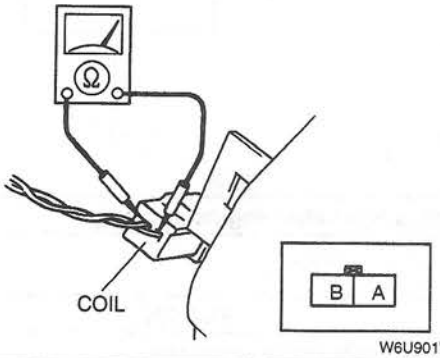 W6U901WG1	Yes	Go to next step.
		No	Replace coil. ☞ 09–14 COIL REMOVAL/INSTALLATION
3	Disconnect coil connector and immobilizer unit connector. Check for continuity between terminal A at coil connector and terminal D at immobilizer unit connector of wiring harness, terminal B at coil connector and terminal F at immobilizer unit connector of wiring harness. Are there continuity? 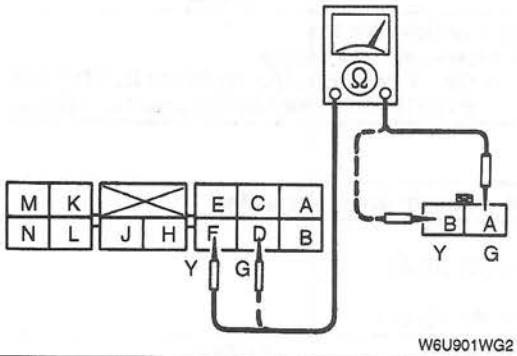 W6U901WG2	Yes	Replace immobilizer unit and reprogram immobilizer system. ☞ 09–14 IMMOBILIZER SYSTEM REPROGRAM PROCEDURE, Immobilizer Unit Replacement
		No	Repair wiring harness between coil and immobilizer unit.

DTC 21	Code word/ID number memorized in immobilizer unit EEPROM can not be read		
POSSIBLE CAUSE	• Defective immobilizer unit		
STEP	INSPECTION		ACTION
—	Turn the IG switch from LOCK to START for 2 seconds. Is security light indicates DTC 21 again?	Yes	Replace immobilizer unit and reprogram immobilizer system. ☞ 09–14 IMMOBILIZER SYSTEM REPROGRAM PROCEDURE, Immobilizer Unit Replacement
		No	Immobilizer system is okay.

DTC 24	Wiring harness between immobilizer unit and PCM is open or short circuit.		
POSSIBLE CAUSE	• Defective immobilizer unit • Defective PCM • Poor connection of connector • Defective wiring harness		
STEP	INSPECTION		ACTION
1	Is both immobilizer unit and PCM connectors connected properly?	Yes	Go to next step.
		No	Connect connectors properly.
2	Disconnect immobilizer unit and PCM unit connectors. Connect **SST** to PCM connector. Connect one probe to terminal A at immobilizer unit connector and another probe to No.5 at **SST**. Check for continuity between terminal A at immobilizer unit connector and terminal 5 at PCM connector of wiring harness. Is there continuity? 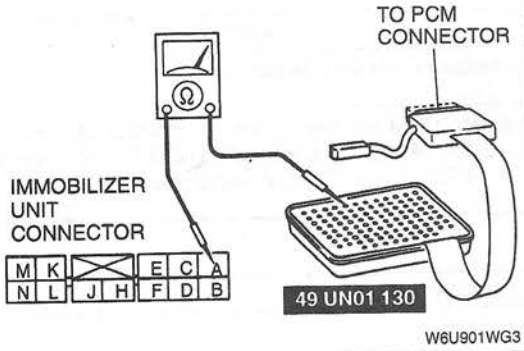 	Yes	Go to next step.
		No	Repair wiring harness between PCM and immobilizer unit.
3	Check for continuity between terminal A at immobilizer unit connector of wiring harness and ground. Is there continuity? 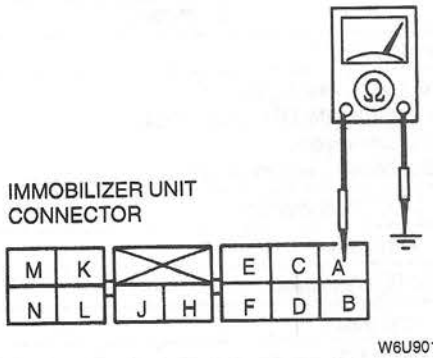 	Yes	Repair for short circuit on wiring harness between PCM and immobilizer unit.
		No	Go to next step.

STEP	INSPECTION		ACTION
4	Connect PCM connector. Turn ignition switch to ON. Measure voltage at terminal A at immobilizer unit connector of wiring harness. Is voltage **more than 10 V**? 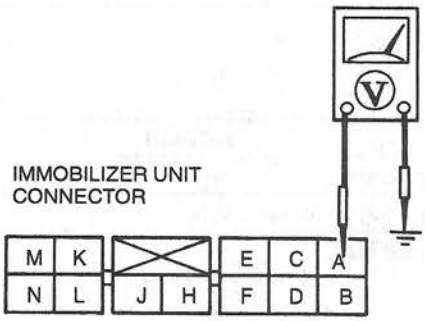 	Yes	Replace immobilizer unit and reprogram immobilizer system. ☞ 09–14 IMMOBILIZER SYSTEM REPROGRAM PROCEDURE, Immobilizer Unit Replacement **Note** • Confirm that the voltage at the terminal L of the immobilizer unit connector is **more than 10 V** when turning the ignition switch to ON after repairing the malfucntion of DTC 24. If not specified, repair the wiring harness between ENGINE fuse and the immobilizer unit.
		No	Replace PCM and reprogram immobilizer system. ☞ 09–14 IMMOBILIZER SYSTEM REPROGRAM PROCEDURE, PCM Replacement **Note** • Confirm that the voltage at the terminal L of the immobilizer unit connector is **more than 10 V** when turning the ignition switch to ON after repairing the malfucntion of DTC 24. If not specified, repair the wiring harness between ENGINE fuse and the immobilizer unit.

DTC 30	Immobilizer unit—PCM communication error
POSSIBLE CAUSE	• Defective immobilizer unit • Defective PCM

STEP	INSPECTION		ACTION
—	Replace immobilizer unit and reprogram immobilizer system. ☞ 09–14 IMMOBILIZER SYSTEM REPROGRAM PROCEDURE, Immobilizer Unit Replacement Does engine start?	Yes	Immobilizer unit was defective.
		No	Replace PCM and reprogram immobilizer system. ☞ 09–14 IMMOBILIZER SYSTEM REPROGRAM PROCEDURE, PCM Replacement

DTC P1602	Immobilizer unit (IU) — PCM communication error
DESCRIPTION	• Command transmission from PCM to IU exceed limit • No response from IU

[Possible Cause]
- Defective wiring harness
- Defective IU
- Defective PCM
- Defective coil
- Defective key (transponder)

STEP	INSPECTION		ACTION
1	CHECK DTC PRESENT • RESET PCM to completely clear DTCs. ☞ After Repair Procedure • RERUN OBD test. • **Is same DTC present after cranking?**	Yes	Go to next step.
		No	Different DTC displayed: Go to appropriate DTC inspection. No DTC displayed: Troubleshooting is completed.
2	CHECK IMMOBILIZER SYSTEM DTC PRESENT • **Does security light indicate DTC 01?**	Yes	Go to DTC 01 inspection.
		No	Go to next step.
3	CHECK IMMOBILIZER SYSTEM DTC PRESENT • **Does security light indicate DTC 03?**	Yes	Go to DTC 03 inspection.
		No	Go to next step.
4	CHECK IMMOBILIZER SYSTEM DTC PRESENT • **Is other DTC present except P1624?**	Yes	Go to other DTC inspection.
		No	Go to next step.

STEP	INSPECTION		ACTION

5	CHECK WIRING HARNESS OPEN CIRCUIT
	• Check for wiring harness open circuit with IU connector disconnected:
	  • IU (A) – PCM (5)
	  • IU (C) – Ground
	  • IU (J) – Battery
	  • IU (L) – Ignition switch (black/white)
	• **Is there open circuit?**
		Yes	Repair wiring harness.

		No	Go to next step.

6	CHECK WIRING HARNESS SHORT CIRCUIT
	• Check for wiring harness short circuit with IU connector disconnected:
	  • IU (A) – PCM (5)
	  • IU (F) – Coil (yellow)
	  • IU (D) – Coil (green)
	• **Is there short circuit?**
		Yes	Repair wiring harness.

		No	Replace IU and reprogram immobilizer system. ☞ 09–14 IMMOBILIZER SYSTEM REPROGRAMMING PROCEDURE, Immobilizer Replacement Go to next step.
7	CHECK DTC REPRESENT • **Does engine start after replacing IU and clearing DTC?**	Yes	Troubleshooting is completed.
		No	Replace PCM and reprogram immobilizer system. ☞ 09–14 IMMOBILIZER SYSTEM REPROGRAMMING PROCEDURE, PCM Replacement

DTC	P1603 P1604	**Code word unregistered in PCM** **Key ID numbers unregistered in PCM**
DESCRIPTION	• Code word is not registered in PCM. (P1603) • Key ID numbers are not registered in PCM. (P1604)	
[Possible Cause] • Immobilizer system reprogram procedure was not performed correctly after replacing PCM.		

STEP	INSPECTION		ACTION
1	CHECK DTC PRESENT • RESET PCM to completely clear DTCs. ☞ After Repair Procedure • RERUN OBD test. • **Is same DTC present after cranking?**	Yes	Perform reprogram procedure again. ☞ 09–14 IMMOBILIZER SYSTEM REPROGRAMMING PROCEDURE, PCM Replacement
		No	Troubleshooting is completed.

DTC	P1621	**Code word does not match after engine cranking**
DESCRIPTION	• Code word stored in PCM and Immobilizer unit does not match.	
[Possible Cause] • Transformation of code word stored in Immobilizer unit. • Transformation of code word stored in PCM.		

STEP	INSPECTION		ACTION
1	CHECK DTC PRESENT • RESET PCM to completely clear DTCs. ☞ After Repair Procedure • RERUN OBD test. • **Is same DTC present after cranking?**	Yes	Go to next step.
		No	Different DTC displayed: Go to appropriate DTC inspection. No DTC displayed: Troubleshooting is completed.
2	CHECK DTC P1602 PRESENT • **Does P1602 present?**	Yes	Go to DTC P1603 inspection.
		No	Replace IU and reprogram immobilizer system. ☞ 09–14 IMMOBILIZER SYSTEM REPROGRAMMING PROCEDURE, Immobilizer Replacement Go to next step.
3	CHECK DTC REPRESENT • **Does engine start after replacing IU and clearing DTC?**	Yes	Troubleshooting is completed.
		No	Replace PCM and reprogram immobilizer system. ☞ 09–14 IMMOBILIZER SYSTEM REPROGRAMMING PROCEDURE, PCM Replacement

DTC P1622	Key ID number does not match
DESCRIPTION	• ID number stored in immobilizer unit (IU) and PCM does not match. This DTC is indicated only after immobilizer unit is replaced and reprogramming system.

[Possible Cause]
- Unregistered key is used in step 3 of immobilizer system reprogram procedure (IU replacement).
- Transformation of key ID number stored in PCM.

STEP	INSPECTION		ACTION
1	CHECK DTC PRESENT • RESET PCM to completely clear DTCs. ☞ After Repair Procedure • RERUN OBD test. • **Is same DTC present after cranking?**	Yes	Go to next step.
		No	Different DTC displayed: Go to appropriate DTC inspection. No DTC displayed: Troubleshooting is completed.
2	CHECK ENGINE IS STARTING NORMALLY USING ANOTHER REGISTERED KEY • **Does engine start with another registered key?**	Yes	Previous key is defective. Discard it.
		No	Replace PCM and reprogram immobilizer system. ☞ 09–14 IMMOBILIZER SYSTEM REPROGRAMMING PROCEDURE, PCM Replacement

DTC P1623	Code word or key ID number write/read error in PCM
DESCRIPTION	• PCM internal EEPROM damaged

[Possible Cause]
- PCM internal EEPROM damaged

STEP	INSPECTION		ACTION
1	CHECK DTC PRESENT • RESET PCM to completely clear DTCs. ☞ After Repair Procedure • RERUN OBD test. • **Is same DTC present after cranking?**	Yes	Replace PCM and reprogram immobilizer system. ☞ 09–14 IMMOBILIZER SYSTEM REPROGRAMMING PROCEDURE, PCM Replacement
		No	Different DTC displayed: Go to appropriate DTC inspection. No DTC displayed: Troubleshooting is completed.

DTC P1624	Immobilizer system communication counter = 0
DESCRIPTION	• PCM detected immobilizer system malfunction more than three times.

[Possible Cause]
- Engine was attempted to start more than three times under malfunction.

STEP	INSPECTION		ACTION
1	CHECK DTC P1624 PRESENT • RESET PCM to completely clear. DTCs ☞ After Repair Procedure • RERUN OBD test. • **Is P1624 still present after cranking?**	Yes	Go to next step.
		No	Troubleshooting is completed.
2	CHECK DTC PRESENT • **Is there another DTC.**	Yes	Go to other DTC inspection.
		No	Go to ENGINE SYMPTOM TROUBLESHOOTING No.5.

09–01G TROUBLESHOOTING [THEFT-DETERRENT (KEYLESS ENTRY SECURITY) SYSTEM]

FOREWORD 09–01G–1
THEFT-DETERRENT (KEYLESS ENTRY SECURITY) SYSTEM SYMPTOM TROUBLESHOOTING 09–01G–1
Diagnostic Index 09–01G–1
Symptom Troubleshooting 09–01G–2

FOREWORD

W6U901W31

- Refer to 00–00 GENERAL INFORMATION and thoroughly read and understand the basic flow of troubleshooting to properly perform the procedure.

THEFT-DETERRENT (KEYLESS ENTRY SECURITY) SYSTEM SYMPTOM TROUBLESHOOTING

W6U901W32

Diagnostic Index

No.	Symptom
1	Security light does not flash at 3 second interval after vehicle is armed.
2	Security light does not flash at 0.3 second interval when any door is opened without using transmitter after vehicle is armed.
3	Horn does not sound but other warnings (headlight and turn light) are okay while alarm operates.
4	Headlight does not flash but other warnings (horn and turn light) are okay while alarm operates.
5	Turn light does not flash but other warnings (horn and headlight) are okay while alarm operates.
6	Alarm does not stop when door is unlocked by transmitter while alarm operates.
7	Alarm does not stop when trunk lid is unlocked by transmitter while alarm operates.
8	Alarm does not stop when trunk lid is unlocked with key while alarm operates.
9	Alarm does not stop when turn key to ON while alarm operates.
10	Alarm does not continue for 2.5 minutes.
11	Alarm does not stop after 2.5 minutes.

Symptom Troubleshooting

1	Security light does not flash at 3 second interval after vehicle is armed

TROUBLESHOOTING HINTS

Malfunction in theft-deterrent system input signal circuit
- Key reminder switch malfunction
- CPU malfunction
- Door switch malfunction
- Trunk compartment light switch malfunction
- Trunk key cylinder switch malfunction
- Hood switch malfunction

Malfunction in theft-deterrent system operation circuit
- Security light bulb malfunction
- Print plate No.1 malfunction
- CPU malfunction
- Malfunction in wiring harness between ROOM 15 A fuse and instrument cluster
- Malfunction in wiring harness between instrument cluster and CPU

STEP	INSPECTION		ACTION
1	Are following power door lock systems okay? • Keyless entry system • Power door lock one-touch system • Trunk lid unlocked with trunk lid opener switch	Yes	Go to next step.
		No	Go to symptom troubleshooting of power door lock system. ☞ 09–01E FOREWORD
2	Remove meter hood. Remove instrument cluster. Measure voltage at instrument cluster connector terminal 2K. Is voltage B+? 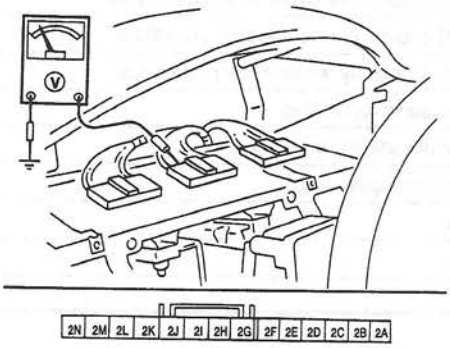 W6U901WJ0	Yes	Go to next step.
		No	Repair wiring harness between ROOM 15 A fuse and instrument cluster.
3	Remove security light bulb from instrument cluster. Inspect security light bulb. Is security light bulb okay?	Yes	Go to next step after installing security light bulb to instrument cluster.
		No	Replace security light bulb.
4	Check for continuity between terminals 1B and 2K at instrument cluster connectors. Is there continuity? 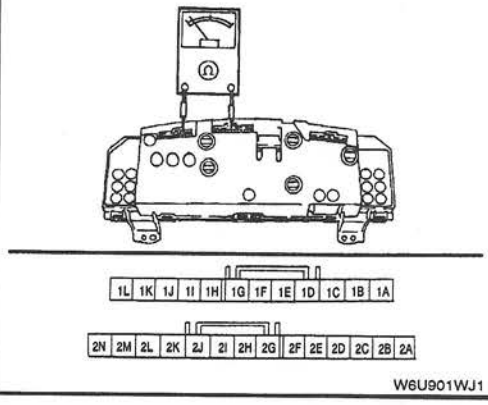 W6U901WJ1	Yes	Go to next step after installing instrument cluster.
		No	Replace print plate No.1. ☞ 09–22 INSTRUMENT CLUSTER DISASSEMBLY/ASSEMBLY

STEP	INSPECTION		ACTION
5	Remove driver's side front scuff plate. Remove driver's side front side trim. Remove nut fixed in joint box. Measure voltage at terminal 2C at CPU connector B. Is voltage **B+**? 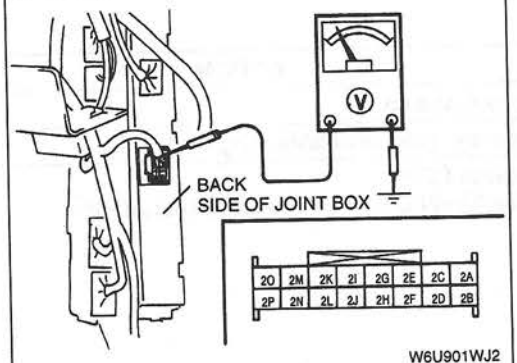	Yes	Replace CPU. ☞ 09–40 CPU REMOVAL/INSTALLATION
		No	Repair wiring harness between instrument cluster and CPU.
6	Remove column cover. Inspect key reminder switch. ☞ 09–21 KEY REMINDER SWITCH INSPECTION Is key reminder switch okay?	Yes	Go to next step.
		No	Replace key reminder switch. ☞ 06–12 STEERING WHEEL AND COLUMN REMOVAL/INSTALLATION
7	Disconnect trunk compartment light switch connector. Inspect trunk compartment light switch. ☞ 09–18 TRUNK COMPARTMENT LIGHT SWITCH INSPECTION Is trunk compartment light switch okay?	Yes	Go to next step.
		No	Replace trunk lid lock. ☞ 09–14 TRUNK LID LOCK AND OPENER REMOVAL/INSTALLATION
8	Remove door switches. Inspect door switches. ☞ 09–18 DOOR SWITCH INSPECTION Are door switches okay?	Yes	Go to next step.
		No	Replace door switch. ☞ 09–18 DOOR SWITCH REMOVAL/INSTALLATION
9	Remove rear finisher. Inspect trunk key cylinder switch. ☞ 09–14 TRUNK KEY CYLINDER SWITCH INSPECTION Is trunk key cylinder switch okay?	Yes	Go to next step.
		No	Replace trunk key cylinder. ☞ 09–14 TRUNK LID LOCK AND OPENER REMOVAL/INSTALLATION
10	Open hood. Inspect hood switch. ☞ 09–14 HOOD SWITCH INSPECTION Is hood switch okay?	Yes	Replace CPU.
		No	Replace hood switch. ☞ 09–14 HOOD SWITCH REMOVAL/INSTALLATION

2	**Security light does not flash at 0.3 second interval when any door is opened without using transmitter after vehicle is armed**		
TROUBLESHOOTING HINTS Malfunction in theft-deterrent system input signal circuit • CPU malfunction • Door switch malfunction • Malfunction in poor installed door switch • Malfunction in wiring harness between door switch and CPU			
STEP	**INSPECTION**		**ACTION**
1	Does security light flash at 3 seconds interval after vehicle is armed?	Yes	Go to next step.
		No	Go to symptom troubleshooting No.1.
2	Remove driver's side front scuff plate. Remove driver's side front side trim. Remove nut fixed in joint box and remove CPU from joint box. Open any door. Check for continuity between terminal 1I at joint box and ground. Is there continuity? 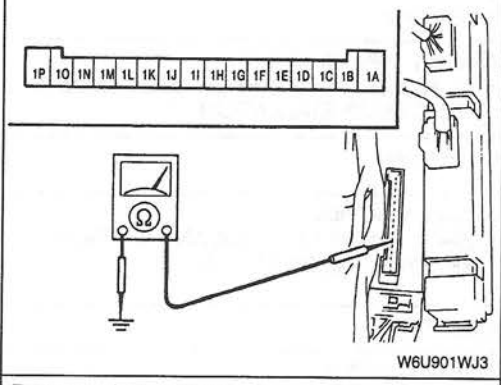 W6U901WJ3	Yes	Replace CPU. ☞ 09–40 CPU REMOVAL/INSTALLATION
		No	Go to next step.
3	Remove door switch. Inspect door switch. ☞ 09–18 DOOR SWITCH INSPECTION Is door switch okay?	Yes	Go to next step.
		No	Replace door switch. ☞ 09–18 DOOR SWITCH REMOVAL/INSTALLATION
4	Is door switch installed securely?	Yes	Repair wiring harness between door switch and CPU.
		No	Install door switch securely.

3	Horn does not sound but other warnings (headlight and turn light) are okay while alarm operates		
TROUBLESHOOTING HINTS Malfunction in theft-deterrent system operation circuit • CPU malfunction • Malfunction in wiring harness between horn relay and CPU			
STEP	**INSPECTION**		**ACTION**
1	Do horns sound with horn switch to on?	Yes	Go to next step.
		No	Inspect horn circuit.
2	Remove driver's side front scuff plate. Remove driver's side front side trim. Remove nut fixed in joint box. Measure voltage at terminal 2A at CPU connector with horn switch OFF. Is voltage **B+**? 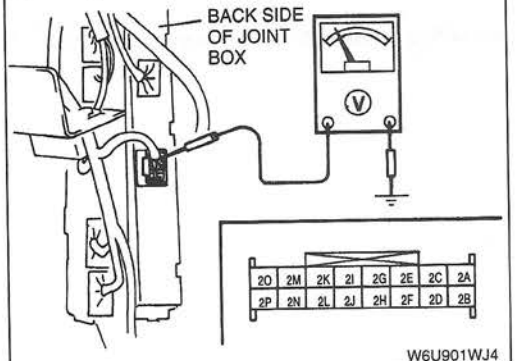 W6U901WJ4	Yes	Replace CPU. ☞ 09–40 CPU REMOVAL/INSTALLATION
		No	Repair wiring harness between horn relay and CPU.

4	Headlight does not flash but other warnings (horn and turn light) are okay while alarm operate
TROUBLESHOOTING HINTS Malfunction in theft-deterrent system operation circuit • CPU malfunction	
STEP	**ACTION**
—	Go to symptom troubleshooting of exterior lighting system. ☞ 09–01J FOREWORD

5	Turn light does not flash but other warnings (horn and headlight) are okay while alarm operates		
TROUBLESHOOTING HINTS Malfunction in theft-deterrent system operation circuit • CPU malfunction • Malfunction in wiring harness between flasher unit and CPU			
STEP	**INSPECTION**		**ACTION**
1	Do turn lights flash when hazard warning switch is ON?	Yes	Go to next step.
		No	Go to symptom troubleshooting of signal lighting system. ☞ 09–01L FOREWORD
2	Remove driver's side front scuff plate. Remove driver's side front side trim. Remove nut fixed in joint box. Measure voltage at terminal 2E at CPU connector with hazard warning switch OFF. Is voltage **B+**? 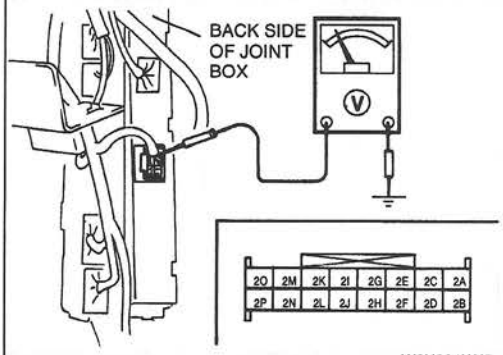 W6U901WJ5	Yes	Replace CPU. ☞ 09–40 CPU REMOVAL/INSTALLATION
		No	Repair wiring harness between flasher unit and CPU.

6	Alarm does not stop when door is unlocked by transmitter while alarm operates		
TROUBLESHOOTING HINTS Malfunction in theft-deterrent system operation circuit • CPU malfunction			
STEP	**INSPECTION**		**ACTION**
—	Was door unlocked by transmitter?	Yes	Replace CPU. ☞ 09–40 CPU REMOVAL/INSTALLATION
		No	Go to symptom troubleshooting of power door lock system. ☞ 09–01E FOREWORD

7	Alarm does not stop when trunk lid is unlocked by transmitter while alarm operates		
TROUBLESHOOTING HINTS Malfunction in theft-deterrent system operation circuit • CPU malfunction			
STEP	**INSPECTION**		**ACTION**
—	Was trunk lid unlocked by transmitter?	Yes	Replace CPU. ☞ 09–40 CPU REMOVAL/INSTALLATION
		No	Go to symptom troubleshooting of power door lock system. ☞ 09–01E FOREWORD

8	Alarm does not stop when trunk lid is unlocked with key while alarm operates		

TROUBLESHOOTING HINTS
Malfunction in theft-deterrent system operation circuit
- CPU malfunction
- Trunk key cylinder switch malfunction
- Malfunction in wiring harness between CPU and trunk key cylinder switch
- Malfunction in wiring harness between trunk key cylinder switch and ground

STEP	INSPECTION		ACTION
1	Measure voltage at terminal A at trunk key cylinder switch connector of wiring harness. Is voltage **5 V**? 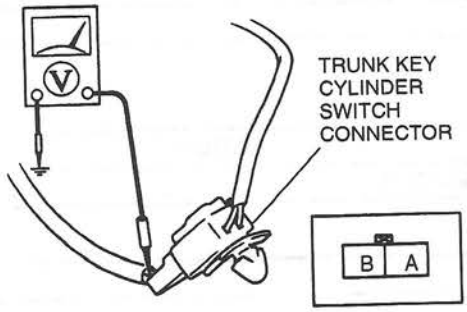 W6U901WJ7	Yes	Go to step 3.
		No	Go to next step.
2	Remove driver's side front scuff plate. Remove driver's side front side trim. Remove nut fixed in joint box. Measure voltage at terminal 2J at CPU connector. Is voltage **5 V**? 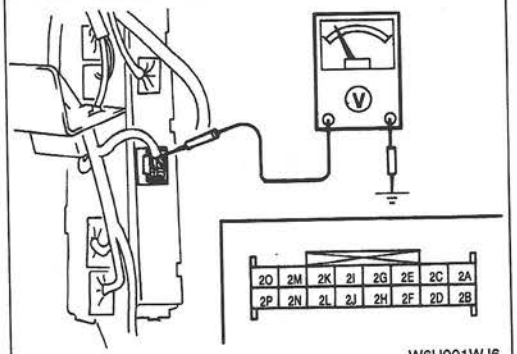 W6U901WJ6	Yes	Repair wiring harness between CPU and trunk key cylinder switch.
		No	Replace CPU.
3	Disconnect trunk key cylinder switch connector. Check for continuity between trunk key cylinder switch connector terminal B and ground. Is there continuity? 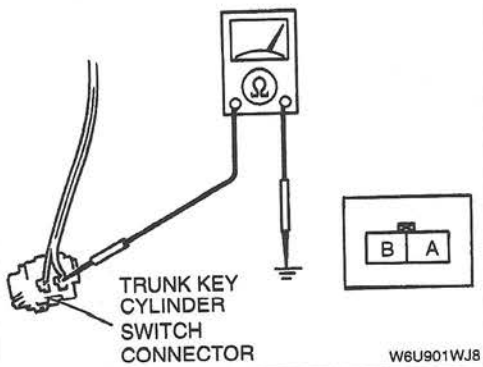 W6U901WJ8	Yes	Replace trunk key cylinder.
		No	Repair wiring harness between trunk key cylinder switch and ground.

9	Alarm does not stop when turn key to ON while alarm operates		
TROUBLESHOOTING HINTS Malfunction in theft-deterrent system operation circuit • CPU malfunction			
STEP	**INSPECTION**		**ACTION**
—	Does key reminder warning buzzer operate okay?	Yes	Replace CPU.
		No	Go to symptom troubleshooting of instrumentation/driver info. ☞ 09–01P FOREWORD

10	Alarm does not continue for 2.5 minutes		
TROUBLESHOOTING HINTS Malfunction in theft-deterrent system operation circuit • CPU malfunction			
STEP	**INSPECTION**		**ACTION**
—	—	—	Replace CPU.

11	Alarm does not stop after 2.5 minutes		
TROUBLESHOOTING HINTS Malfunction in theft-deterrent system operation circuit • CPU malfunction			
STEP	**INSPECTION**		**ACTION**
—	—	—	Replace CPU.

09–01H TROUBLESHOOTING [SUNROOF]

FOREWORD 09–01H–1
SLIDING SUNROOF SYMPTOM TROUBLESHOOTING 09–01H–1
Diagnostic Index 09–01H–1
Symptom Troubleshooting 09–01H–1

FOREWORD

W6U901W36

- Refer to 00–00 GENERAL INFORMATION and thoroughly read and understand the basic flow of troubleshooting to properly perform the procedures.

SLIDING SUNROOF SYMPTOM TROUBLESHOOTING

W6U901W37

Diagnostic Index

- Use the chart below to verify the symptoms of the trouble in order to diagnose the appropriate area.

No.	Malfunction symptom
1	Sliding sunroof does not move

Symptom Troubleshooting

1 Sliding sunroof does not move

TROUBLESHOOTING HINTS

① Sliding sunroof does not move
- SUNROOF 15 A fuse malfunction
- Malfunction in wiring harness between SUNROOF 15 A fuse and sunroof control module
- Malfunction in wiring harness between sunroof control module and ground
- Malfunction in wiring harness between sunroof switch and ground
- Malfunction in wiring harness between sunroof control module and sunroof motor
- Sunroof motor malfunction
- Sunroof control module malfunction
- Guide malfunction
- Drive unit malfunction

STEP	INSPECTION		ACTION
1	Is SUNROOF 15 A fuse okay?	Yes	Go to next step.
		No	Replace fuse after repairing wiring harness.

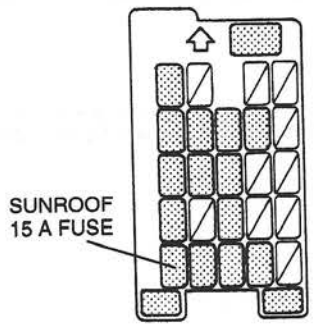

W6U901WL0

STEP	INSPECTION		ACTION
2	Remove the headliner. ☞ 09–17 HEADLINER REMOVAL/INSTALLATION Disconnect sunroof control module connector. Inspect continuity between terminal 1A of sunroof control module connector of wiring harness and ground. Is there continuity? 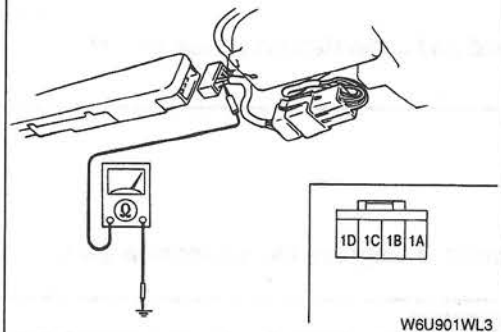 W6U901WL3	Yes	Reconnect sunroof control module connector, then go to next step.
		No	Repair wiring harness between sunroof control module and ground.
3	Turn ignition switch to ON. Measure voltage at terminal 1C of sunroof control module connector of wiring harness. Is voltage **B+**? 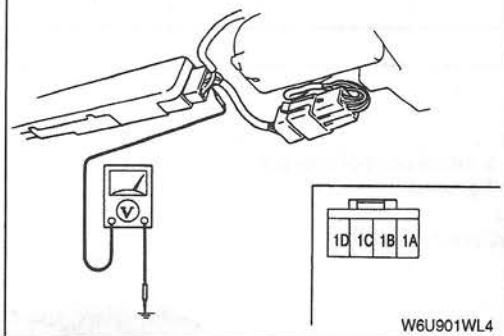 W6U901WL4	Yes	Go to next step.
		No	Repair wiring harness between SUNROOF 15 A fuse and sunroof control module.
4	Inspect sunroof switch. ☞ 09–15 SUNROOF SWITCH INSPECTION Is sunroof switch okay?	Yes	Reconnect sunroof switch connector, then go to next step.
		No	Replace sunroof switch.
5	Inspect continuity between terminal D of sunroof switch connector of wiring harness and ground. Is there continuity? 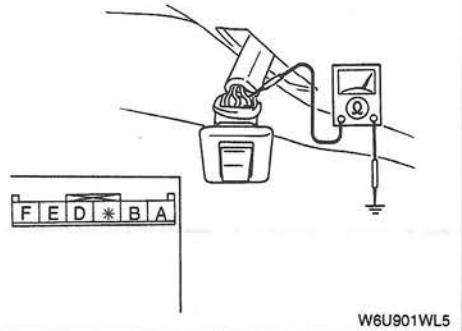 W6U901WL5	Yes	Go to next step.
		No	Repair wiring harness between sunroof switch and ground.

STEP	INSPECTION		ACTION
6	Disconnect sunroof control module connector. Inspect continuity between terminal E of sunroof motor connector of wiring harness and terminal 1B of sunroof control module connector of wiring harness. Is there continuity? 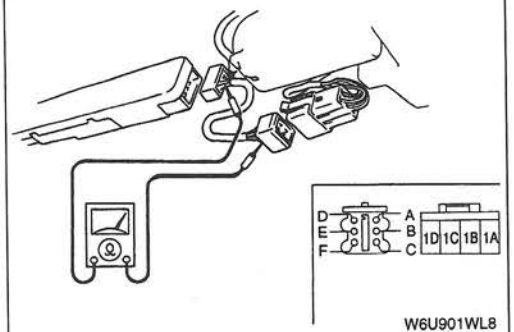 W6U901WL8	Yes	Go to next step.
		No	Repair wiring harness between sunroof motor and sunroof control module.
7	Inspect continuity between terminal F of sunroof motor connector of wiring harness and terminal 1D of sunroof control module connector of wiring harness. Is there continuity? 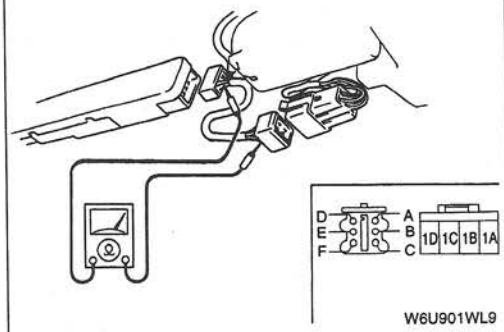 W6U901WL9	Yes	Go to next step.
		No	Repair wiring harness between sunroof motor and sunroof control module.
8	Remove sunroof motor. Inspect sunroof motor. ☞ 09–15 SUNROOF MOTOR INSPECTION, Motor Is sunroof motor okay?	Yes	Install sunroof motor, then go to next step.
		No	Replace sunroof motor.
9	Remove sunroof unit. ☞ 09–15 SUNROOF UNIT REMOVAL/INSTALLATION Does guide move along sunroof frame smoothly?	Yes	Go to next step.
		No	Adjust guide. Replace guide if damaged.
10	Does drive unit move along sunroof frame smoothly?	Yes	Replace sunroof control module.
		No	Adjust drive unit. Replace drive unit if damaged.

09–01J TROUBLESHOOTING [EXTERIOR LIGHTING SYSTEM]

FOREWORD 09–01J–1
EXTERIOR LIGHTING SYSTEM SYMPTOM TROUBLESHOOTING 09–01J–1
Diagnostic Index 09–01J–1
Symptom Troubleshooting 09–01J–1

FOREWORD

W6U901W41

- Refer to 00–00 GENERAL INFORMATION and thoroughly read and understand the basic flow of troubleshooting to properly perform the procedures.

EXTERIOR LIGHTING SYSTEM SYMPTOM TROUBLESHOOTING

W6U901W42

Diagnostic Index

- Use the chart below to verify the symptoms of the trouble in order to diagnose the appropriate area.

No.	Malfunction Symptom
1	Headlight auto light-off does not operate
2	Headlights do not illuminate
3	Low beam headlights do not illuminate
4	High beam headlights do not illuminate
5	Daytime running lights do not illuminate (Canada)
6	Daytime running lights do not turn off when parking brake lever is set (Canada)
7	Daytime running lights do not turn off when ignition switch is turned to LOCK or ACC (Canada)
8	TNS do not illuminate
9	License plate light does not illuminate
10	Taillights do not illuminate
11	Parking lights do not illuminate

Symptom Troubleshooting

1 Headlight auto light-off does not operate

TROUBLESHOOTING HINTS

Malfunction in headlight auto light-off ground circuit
① Headlight auto light-off does not operate
- Malfunction in wiring harness between CPU and ground

Malfunction in headlight auto light-off input signal circuit
① Headlight auto light-off does not operate
- Headlight high relay malfunction (With DRL)
- Headlight relay malfunction
- TNS relay malfunction
- Ignition switch malfunction
- Malfunction in wiring harness between headlight high relay and CPU (With DRL)
- Malfunction in wiring harness between headlight relay and CPU
- Malfunction in wiring harness between TNS relay and CPU
- Malfunction in wiring harness between ignition switch and CPU

Malfunction in headlight auto light-off operation circuit
① Headlight auto light-off does not operate
- CPU malfunction

STEP	INSPECTION		ACTION
1	Is it equipped with DRL?	Yes	Go to next step.
		No	Go to step 3.
2	Remove headlight high relay. Inspect headlight high relay. ☞ 09–18 HEADLIGHT HIGH RELAY INSPECTION Is headlight high relay okay?	Yes	Go to next step.
		No	Replace headlight high relay. ☞ 09–18 HEADLIGHT HIGH RELAY REMOVAL/INSTALLATION

STEP	INSPECTION		ACTION
3	Remove headlight relay. Inspect headlight relay. ☞ 09–18 HEADLIGHT RELAY INSPECTION Is headlight relay okay?	Yes	Go to next step.
		No	Replace headlight relay.
4	Remove TNS relay. Inspect TNS relay. ☞ 09–18 TNS RELAY INSPECTION Is TNS relay okay?	Yes	With DRL: Go to next step. Without DRL: Go to step 8.
		No	Replace TNS relay.
5	Remove driver's side front scuff plate. Remove driver's side front side trim. Measure voltage at terminal 4K at CPU connector D of wiring harness. Is voltage **B+**? 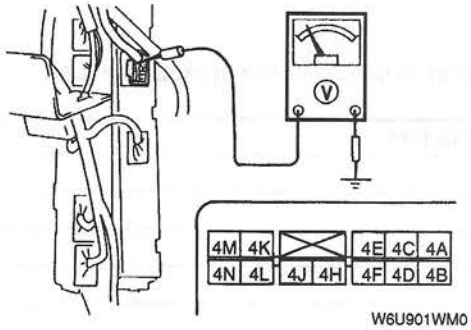 W6U901WM0	Yes	Go to next step.
		No	Repair wiring harness between headlight high relay and CPU.
6	Measure voltage at terminal 4E at CPU connector D of wiring harness. Is voltage **B+**? 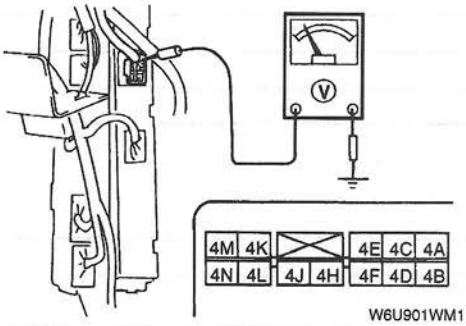 W6U901WM1	Yes	Go to next step.
		No	Repair wiring harness between headlight relay and CPU.
7	Measure voltage at terminal 4N at CPU connector D of wiring harness. Is voltage **B+**? 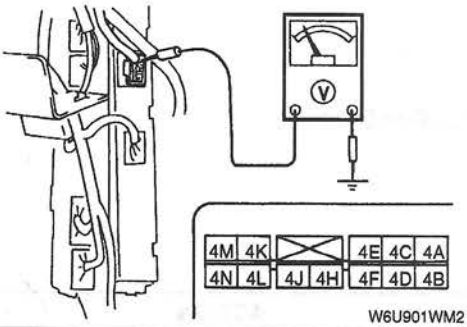 W6U901WM2	Yes	Go to step 9.
		No	Repair wiring harness between TNS relay and CPU.

STEP	INSPECTION		ACTION
8	Measure voltage at terminal 3J at CPU connector C of wiring harness. Is voltage **B+**? 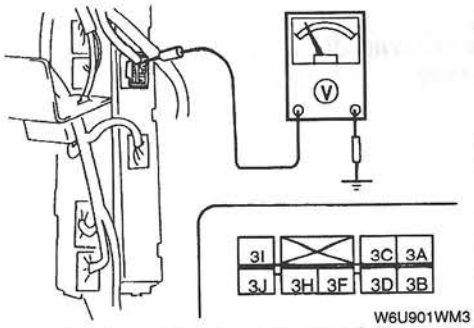 W6U901WM3	Yes	Go to next step.
		No	Repair wiring harness between TNS relay and CPU.
9	Remove nut fixed in joint box and remove CPU from joint box. Turn ignition switch to ACC or ON. Measure voltage at terminal 1C at joint box. Is voltage **B+**? 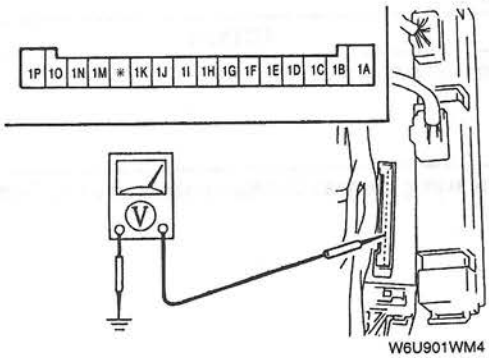 W6U901WM4	Yes	Go to step 11.
		No	Go to next step.
10	Remove column cover. Inspect ignition switch. ☞ 09–21 IGNITION SWITCH INSPECTION Is ignition switch okay?	Yes	Repair wiring harness between ignition switch and CPU, then go to next step.
		No	Replace ignition switch. ☞ 09–21 IGNITION SWITCH REMOVAL/INSTALLAITON Go to next step.
11	Check for continuity between terminal 1G at joint box and ground. Is there continuity? 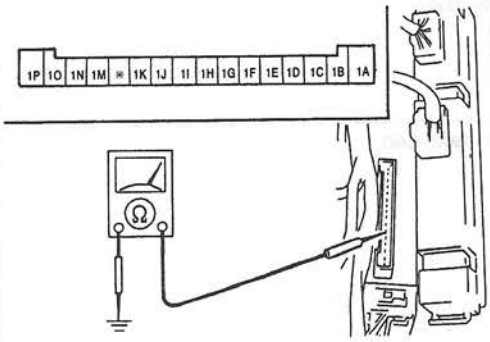 W6U901WM5	Yes	Replace CPU. ☞ 09–40 CPU REMOVAL/INSTALLATION
		No	Repair wiring harness between CPU and ground.

2	Headlights do not illuminate

TROUBLESHOOTING HINTS

Malfunction in headlight power supply/ground circuit
① Headlights do not illuminate
- Malfunction in wiring harness between battery and headlight relay
- Malfunction in wiring harness between headlight high relay and ground (With DRL)
- Malfunction in wiring harness between battery and headlight high relay

Malfunction in headlight input signal circuit
① Headlights do not illuminate
- Headlight relay malfunction
- Headlight high relay malfunction (With DRL)
- Light switch (headlight switch) malfunction

Malfunction in headlight operation circuit
① Headlights do not illuminate
- CPU malfunction
- HEAD (LH) 15 A fuse and HEAD (RH) 15 A fuse malfunction
- Malfunction in wiring harness between CPU and light switch (headlight switch)
- Malfunction in wiring harness between headlight and CPU
- Malfunction in wiring harness between headlight relay and CPU
- Malfunction in wiring harness between headlight and headlight high relay (With DRL)
- Malfunction in wiring harness between headlight and light switch (headlight switch)
- Malfunction in wiring harness between headlight relay and headlight
- Malfunction in wiring harness between headlight high relay and CPU

STEP	INSPECTION		ACTION
1	Remove headlight relay. Measure voltage at terminals A and B at headlight relay connector. Is voltage **B+**? 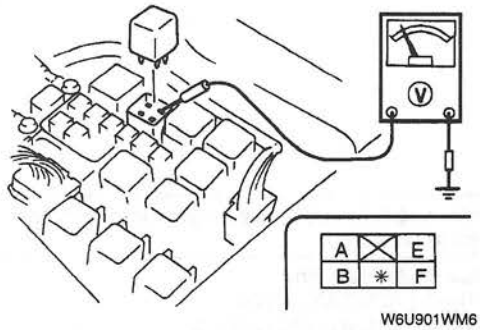 W6U901WM6	Yes	Go to next step.
		No	Repair wiring harness between battery and headlight relay.
2	Inspect headlight relay. ☞ 09–18 HEADLIGHT RELAY INSPECTION Is headlight relay okay?	Yes	Go to next step.
		No	Replace headlight relay.
3	Install headlight relay. Turn headlight switch to second position. Measure voltage at terminal C at headlight connector of wiring harness. Is voltage **B+**? 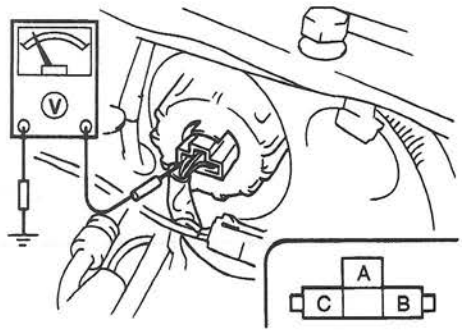 W6U901WM8	Yes	Go to step 5.
		No	Go to next step.

STEP	INSPECTION		ACTION
4	Turn headlight switch to OFF. Are HEAD (LH) 15 A fuse and HEAD (RH) 15 A fuse okay? 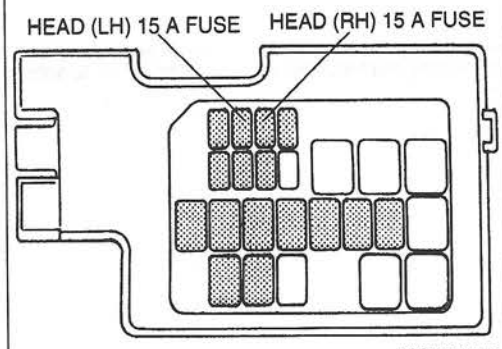 	Yes	Repair wiring harness between headlight relay and headlight, then go to next step.
		No	Replace fuse after repairing wiring harness.
5	Is it equipped with DRL?	Yes	Go to next step.
		No	Go to step 14.
6	Remove driver's side front scuff plate. Remove driver's side front side trim. Turn headlight switch to OFF. Measure voltage at terminal 4E at CPU connector D of wiring harness. Is voltage **B+**? 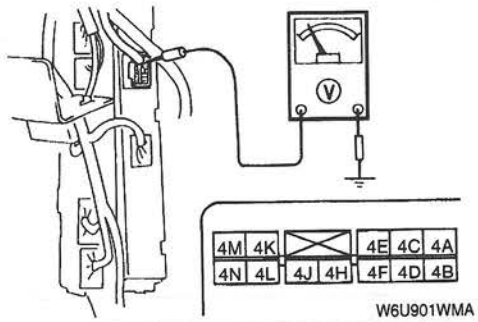 	Yes	Go to next step.
		No	Repair wiring harness between headlight relay and CPU.
7	Remove nut fixed in joint box and remove CPU from joint box. Turn headlight switch to second position. Measure voltage at terminals 4A and 4C at CPU connector D of wiring harness. Is voltage **B+**? 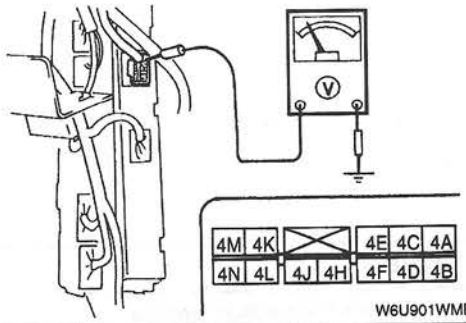 	Yes	Go to next step.
		No	Repair wiring harness between headlight and CPU.

STEP	INSPECTION		ACTION
8	Remove nuts to move main fuse block to side. Remove headlight high relay. Measure voltage at terminal A at headlight high relay connector. Is voltage **B+**? 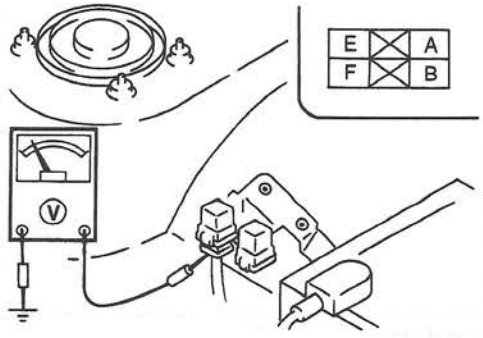 W6U901WMC	Yes	Go to next step.
		No	Repair wiring harness between battery and headlight high relay.
9	Turn headlight switch to second position. Measure voltage at terminal E at headlight high relay connector. Is voltage **B+**? 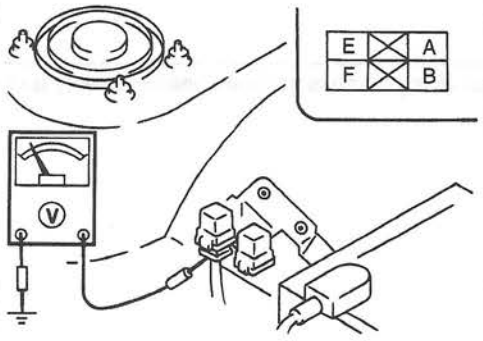 W6U901WMD	Yes	Go to next step.
		No	Repair wiring harness between headlight and headlight high relay.
10	Install CPU in joint box. Measure voltage at terminal 4K at CPU connector D of wiring harness. Is voltage **B+**? 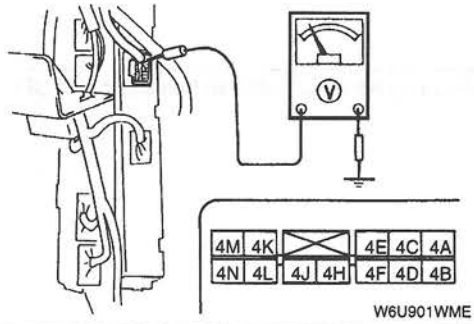 W6U901WME	Yes	Go to next step.
		No	Repair wiring harness between headlight high relay and CPU.
11	Remove column cover. Inspect light switch (headlight switch). ☞ 09–18 LIGHT SWITCH INSPECTION Is light switch (headlight switch) okay?	Yes	Go to next step.
		No	Replace light switch (headlight switch). ☞ 09–18 LIGHT SWITCH REMOVAL/INSTALLATION

STEP	INSPECTION		ACTION
12	Measure voltage at terminal 2F at light switch (headlight switch) connector of wiring harness. Is voltage **0 V**? 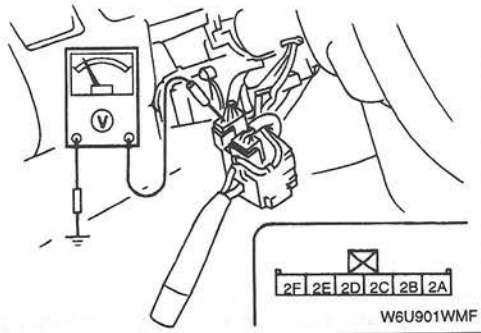 W6U901WMF	Yes	Go to next step.
		No	Replace light switch (headlight switch). ☞ 09–18 LIGHT SWITCH REMOVAL/INSTALLAITON
13	Measure voltage at terminal 4F at CPU connector D of wiring harness. Is voltage **0 V**? 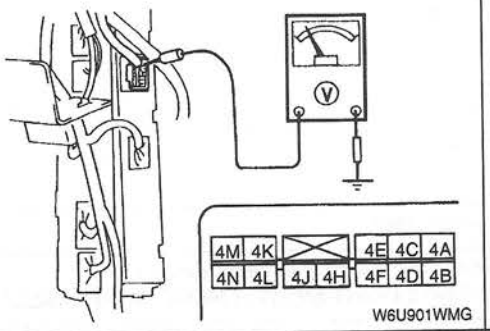 W6U901WMG	Yes	Replace CPU. ☞ 09–40 CPU REMOVAL/INSTALLATION
		No	Repair wiring harness between light switch (headlight switch) and CPU.
14	Remove driver's side front scuff plate. Remove driver's side front side trim. Turn headlight switch to OFF. Measure voltage at terminal 3A at CPU connector C of wiring harness. Is voltage **B+**? 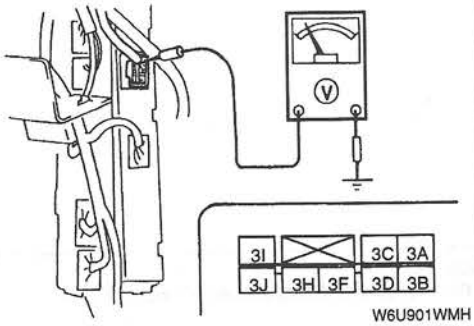 W6U901WMH	Yes	Go to next step.
		No	Repair wiring harness between headlight relay and CPU.

STEP	INSPECTION		ACTION
15	Remove column cover. Inspect wiring harness between terminal A at headlight (LH) connector and 1B at light switch (headlight switch) connector, between terminal B at headlight (LH) connector and terminal 1A at light switch (headlight switch) connector, between terminal A at headlight (RH) connector and terminal 1F at light switch (headlight switch) connector, between terminal B at headlight (RH) connector and terminal 1H at light switch (headlight switch) connector for following. • Short to ground • Open circuit Is wiring harness okay? 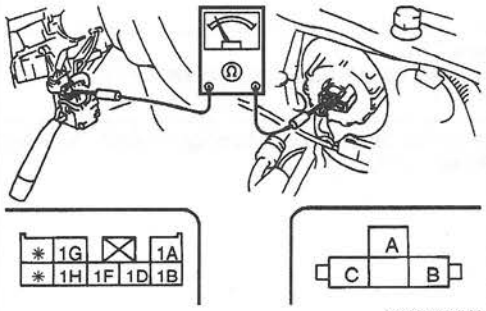	Yes	Go to next step.
		No	Repair wiring harness between headlight and light switch (headlight switch).
16	Remove column cover. Inspect light switch (headlight switch). ☞ 09–18 LIGHT SWITCH INSPECTION Is light switch (headlight switch) okay?	Yes	Go to next step.
		No	Replace light switch (headlight switch). ☞ 09–18 LIGHT SWITCH REMOVAL/INSTALLATION
17	Measure voltage at terminal 2F at light switch (headlight switch) connector of wiring harness. Is voltage **5 V**? 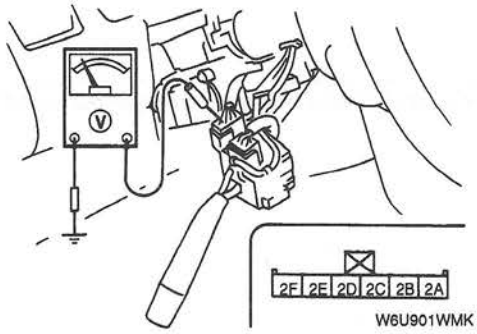	Yes	Replace light switch (headlight switch). ☞ 09–18 LIGHT SWITCH REMOVAL/INSTALLAITON
		No	Go to next step.
18	Measure voltage at terminal 3B at CPU connector C of wiring harness. Is voltage **0 V**? 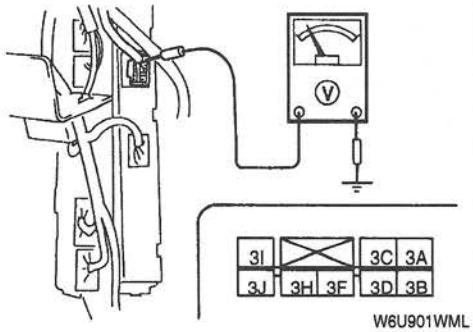	Yes	Replace CPU. ☞ 09–40 CPU REMOVAL/INSTALLATION
		No	Repair wiring harness between light switch (headlight switch) and CPU.

3	Low beam headlights do not illuminate

TROUBLESHOOTING HINTS

Malfunction in headlight ground circuit

① Low beam headlights do not illuminate
- Malfunction in wiring harness between light switch (headlight switch) and ground

Malfunction in headlight operation circuit

① Low beam headlights do not illuminate
- CPU malfunction
- Light switch (headlight switch) malfunction
- Headlight bulb malfunction
- Malfunction in wiring harness between headlight and CPU
- Malfunction in wiring harness between headlight and light switch (headlight switch)

STEP	INSPECTION		ACTION
1	Inspect headlight (low beam) bulb. Is headlight (low beam) bulb okay?	Yes	Go to next step.
		No	Replace headlight bulb. ☞ 09–18 HEADLIGHT BULB REMOVAL/INSTALLATION
2	Is it equipped with DRL?	Yes	Go to next step.
		No	Go to step 5.
3	Remove column cover. Inspect light switch (headlight switch). ☞ 09–18 LIGHT SWITCH INSPECTION Is light switch (headlight switch) okay?	Yes	Go to next step.
		No	Replace light switch (headlight switch). ☞ 09–18 LIGHT SWITCH REMOVAL/INSTALLATION
4	Remove driver's side front scuff plate. Remove driver's side front side trim. Disconnect CPU connectors. Turn headlight switch to second position. Measure voltage at terminals 4A and 4C at CPU connector D of wiring harness. Is voltage **B+**? 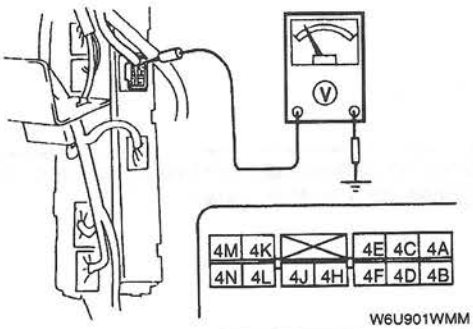 W6U901WMM	Yes	Replace CPU. ☞ 09–40 CPU REMOVAL/INSTALLATION
		No	Repair wiring harness between headlights (low beam) and CPU.
5	Remove column cover. Set dimmer switch to HI. Measure voltage at terminals 1B and 1F at light switch (headlight switch) connector of wiring harness. Is voltage **B+**? 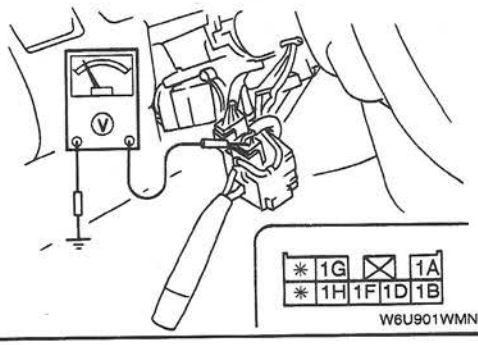 W6U901WMN	Yes	Go to next step.
		No	Repair wiring harness between headlights (low beam) and light switch (headlight switch).

STEP	INSPECTION		ACTION
6	Inspect light switch (headlight switch). ☞ 09–18 LIGHT SWITCH INSPECTION Is light switch (headlight switch) okay?	Yes	Repair wiring harness between light switch (headlight switch) and ground.
		No	Replace light switch (headlight switch). ☞ 09–18 LIGHT SWITCH REMOVAL/INSTALLATION

4	**High beam headlights do not operate**

TROUBLESHOOTING HINTS

Malfunction in headlight ground circuit

① High beam headlights do not illuminate
- Malfunction in wiring harness between headlight high relay and ground
- Malfunction in wiring harness between light switch (headlight switch) and ground

Malfunction in headlight operation circuit

① High beam headlights do not illuminate
- CPU malfunction
- Light switch (headlight switch) malfunction
- Headlight bulb malfunction
- Headlight high relay malfunction
- Malfunction in wiring harness between headlight and headlight high relay
- Malfunction in wiring harness between headlight high relay and CPU
- Malfunction in wiring harness between headlight and light switch (headlight switch)

STEP	INSPECTION		ACTION
1	Inspect headlight (high beam) bulb. Is headlight (high beam) bulb okay?	Yes	Go to next step.
		No	Replace headlight bulb. ☞ 09–18 HEADLIGHT BULB REMOVAL/INSTALLAITON
2	Is it equipped with DRL?	Yes	Go to step 4.
		No	Go to next step.
3	Remove column cover. Turn headlight switch to second position. Set dimmer switch to LO. Measure voltage at terminals 1A and 1H at light switch (headlight switch) connector of wiring harness. Is voltage **B+**? 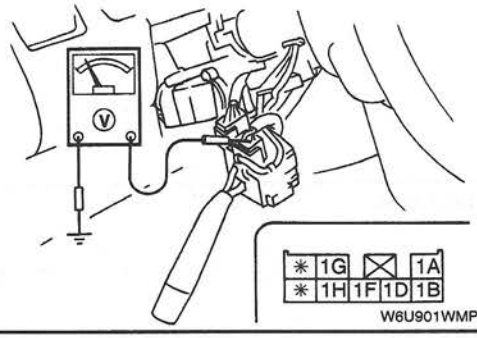 	Yes	Go to step 8.
		No	Repair wiring harness between headlights (high beam) and light switch (headlight switch).

STEP	INSPECTION		ACTION
4	Remove nuts to move main fuse block to the side. Measure voltage at terminals A and E at headlight high relay connector. Is voltage **B+**? 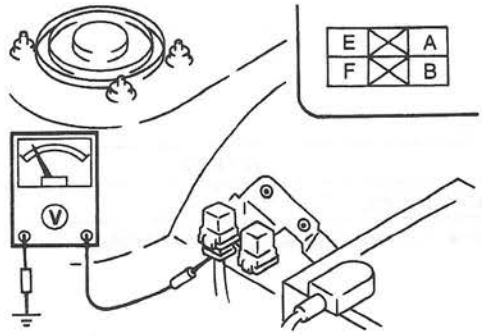	Yes	Go to next step.
		No	Repair wiring harness between headlight (high beam) and headlight high relay.
5	Turn headlight switch to OFF. Inspect headlight high relay. ☞ 09–18 HEADLIGHT HIGH RELAY INSPECTION Is headlight high relay okay?	Yes	Repair wiring harness between headlight high relay and ground.
		No	Replace headlight high relay. ☞ 09–18 HEADLIGHT HIGH RELAY REMOVAL/INSTALLATION
6	Remove driver's side front scuff plate. Remove driver's side front side trim. Measure voltage at terminal 4K at CPU connector D of wiring harness. Is voltage **B+**? 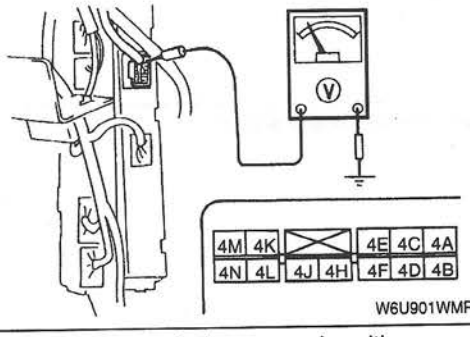	Yes	Replace CPU. ☞ 09–18 CPU REMOVAL/INSTALLATION Go to next step.
		No	Repair wiring harness between headlight high relay and CPU, then go to next step.
7	Turn headlight switch to second position. Set dimmer switch to LO. Measure voltage at terminal 4H at CPU connector D of wiring harness. Is voltage **0 V**? 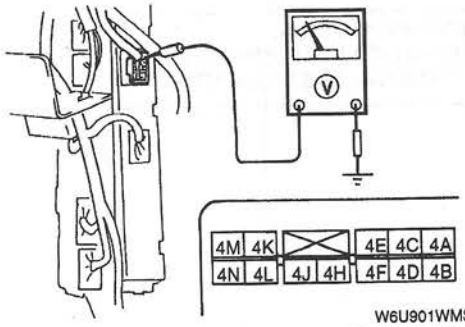	Yes	Replace CPU. ☞ 09–40 CPU REMOVAL/INSTALLATION
		No	Go to next step.
8	Remove column cover. Inspect light switch (headlight switch). ☞ 09–18 LIGHT SWITCH INSPECTION Is light switch (headlight switch) okay?	Yes	Repair wiring harness between light switch (headlight switch) and ground.
		No	Replace light switch (headlight switch). ☞ 09–18 LIGHT SWITCH REMOVAL/INSTALLATION

5	Daytime running lights do not illuminate (Canada)		
TROUBLESHOOTING HINTS Malfunction in headlight input signal circuit ① Daytime running lights do not illuminate • Parking brake switch malfunction • Ignition switch malfunction • METER 10 A fuse malfunction Malfunction in headlight operation circuit ① Daytime running lights do not illuminate • CPU malfunction • Malfunction in wiring harness between METER 10 A fuse and CPU.			
STEP	**INSPECTION**		**ACTION**
1	Is METER 10 A fuse okay? 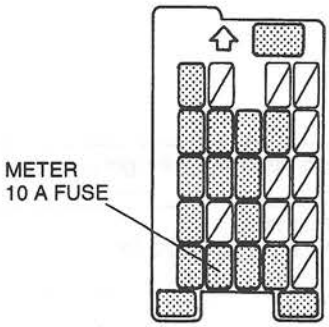 W6U901WMU	Yes	Go to next step.
		No	Replace fuse after repairing wiring harness.
2	Remove rear console. ☞ 09–17 REAR CONSOLE REMOVAL/INSTALLATION Pull parking brake lever. Check for continuity between terminal A at parking brake switch connector of wiring harness and ground. Is there continuity? 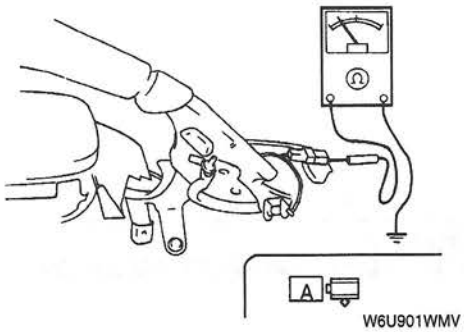 W6U901WMV	Yes	Go to next step.
		No	Replace parking brake switch.
3	Remove column cover. Inspect ignition switch. ☞ 09–21 IGNITION SWITCH INSPECTION Is ignition switch okay?	Yes	Go to next step.
		No	Replace ignition switch. ☞ 09–21 IGNITION SWITCH REMOVAL/INSTALLATION

STEP	INSPECTION		ACTION
4	Remove nut fixed in joint box and remove CPU from joint box. Turn ignition switch to ON. Measure voltage at terminal 1M at joint box. Is voltage **B+**? 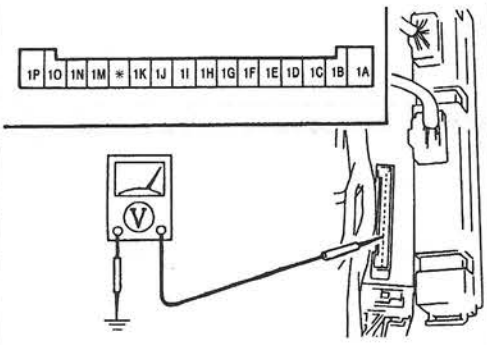 W6U901WMW	Yes	Replace CPU. ☞ 09–40 CPU REMOVAL/INSTALLATION
		No	Repair wiring harness between METER 10 A fuse and CPU.

6	**Daytime running lights do not turn off when parking brake lever is set (Canada)**

TROUBLESHOOTING HINTS
Malfunction in headlight input signal circuit
① Daytime running lights do not turn off
- Parking brake switch malfunction

Malfunction in headlight operation circuit
① Daytime running lights do not turn off
- CPU malfunction
- Malfunction in wiring harness between CPU and parking brake switch
- Malfunction in wiring harness between parking brake switch and ground

STEP	INSPECTION		ACTION
1	Remove rear console. ☞ 09–17 REAR CONSOLE REMOVAL/INSTALLAITION Pull parking brake lever. Check for continuity between terminal A at parking brake switch connector of wiring harness and ground. Is there continuity? 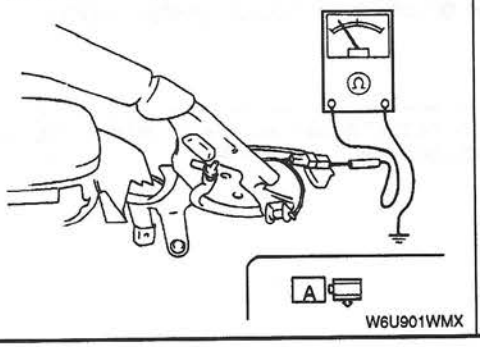 W6U901WMX	Yes	Go to next step.
		No	Replace parking brake switch.

STEP	INSPECTION		ACTION
2	Remove driver's side front scuff plate. Remove driver's side front side trim. Remove nut fixed in joint box and remove CPU from joint box. Release parking brake lever. Check for continuity between terminal 1P at joint box and terminal A of parking brake switch connector. Is there continuity? 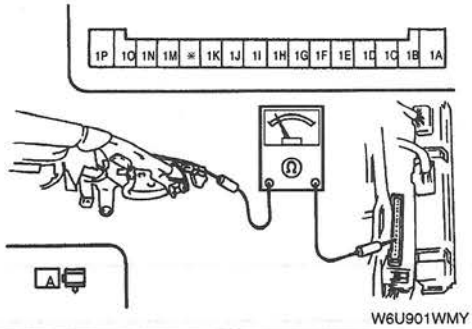 	Yes	Replace CPU. ☞ 09–40 CPU REMOVAL/INSTALLATION
		No	Repair wiring harness between CPU and parking brake switch.

7	Daytime running lights do not turn off when ignition switch is turned to LOCK or ACC (Canada)		
TROUBLESHOOTING HINTS Malfunction in headlight input signal circuit ① Daytime running lights do not illuminate • Ignition switch malfunction Malfunction in headlight operation circuit ① Daytime running lights do not illuminate • CPU malfunction • Malfunction in wiring harness between ignition switch and CPU			
STEP	**INSPECTION**		**ACTION**
1	Remove column cover. Inspect ignition switch. ☞ 09–21 IGNITION SWITCH INSPECTION Is ignition switch okay?	Yes	Go to next step.
		No	Replace ignition switch. ☞ 09–21 IGNITION SWITCH REMOVAL/INSTALLATION
2	Remove nut fixed in joint box and remove CPU from joint box. Turn ignition switch to ACC or ON. Measure voltage at terminal 1C at joint box. Is voltage **B+**? 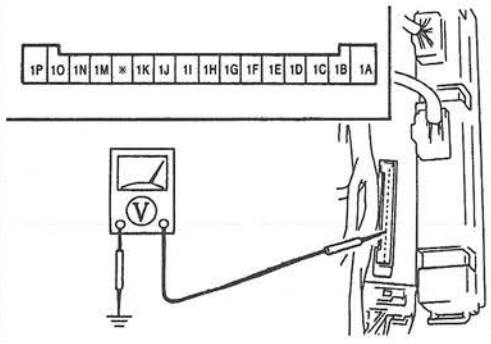 	Yes	Replace CPU. ☞ 09–40 CPU REMOVAL/INSTALLATION
		No	Repair wiring harness between terminal F of ignition switch and terminal 1C of CPU.

8	TNS do not illuminate

TROUBLESHOOTING HINTS

Malfunction in TNS power supply/ground circuit

① TNS do not illuminate
- TAIL 15 A fuse malfunction
- Malfunction in wiring harness between TAIL 15 A fuse and TNS relay
- Malfunction in wiring harness between each TNS bulb and ground

Malfunction in headlight input signal circuit

① TNS do not illuminate
- Malfunction in wiring harness between TNS relay and CPU

Malfunction in headlight operation circuit

① TNS do not illuminate
- CPU malfunction
- Light switch (headlight switch) malfunction
- Malfunction in wiring harness between CPU and light switch (headlight switch)

STEP	IPECTION		ACTION
1	Is TAIL 15 A fuse okay? 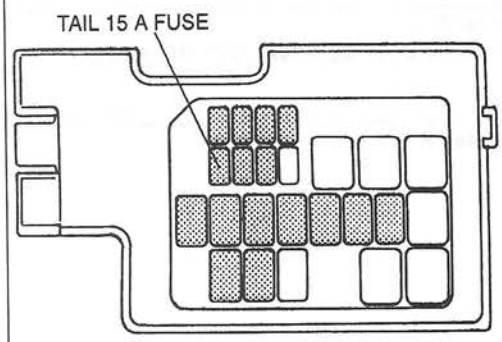	Yes	Go to next step.
		No	Replace fuse after repairing wiring harness.
2	Remove TNS relay. Measure voltage at terminals A and B at TNS relay connector. Is voltage **B+**? 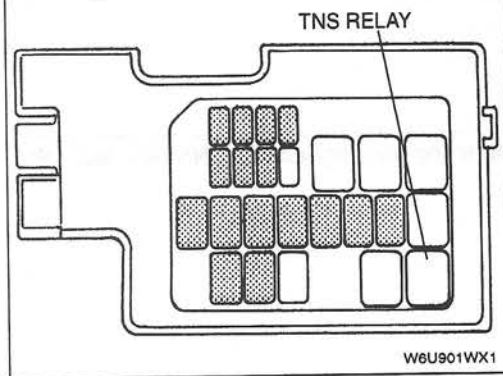	Yes	Go to next step.
		No	Repair wiring harness between TAIL 15 A fuse and TNS relay.
3	Inspect TNS relay. ☞ 09–18 TNS RELAY INSPECTION Is TNS relay okay?	Yes	Go to next step.
		No	Replace TNS relay.
4	Is it equipped with DRL?	Yes	Go to step 5.
		No	Go to step 6.

STEP	IPECTION		ACTION
5	Remove driver's side front scuff plate. Remove driver's side front side trim. Measure voltage at terminal 4N at CPU connector D of wiring harness. Is voltage **B+**? 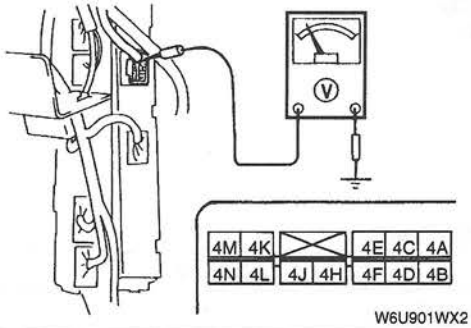 W6U901WX2	Yes	Go to next step.
		No	Repair wiring harness between TNS relay and CPU.
6	Set headlight switch to OFF. Measure voltage at terminal 4M at CPU connector D of wiring harness. Is voltage **0 V**? 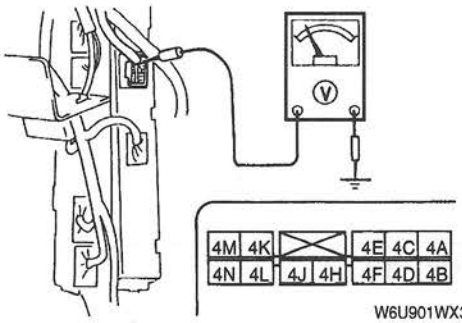 W6U901WX3	Yes	Replace CPU. ☞ 09–40 CPU REMOVAL/INSTALLATION
		No	Go to step 9.
7	Remove driver's side front scuff plate. Remove driver's side front side trim. Measure voltage at terminal 3J at CPU connector C of wiring harness. Is voltage **5 V**? 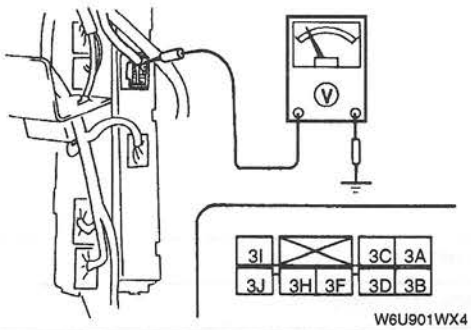 W6U901WX4	Yes	Go to next step.
		No	Repair wiring harness between TNS relay and CPU.

STEP	IPECTION		ACTION
8	Measure voltage at terminal 3I at CPU connector C of wiring harness. Is voltage **0 V**? 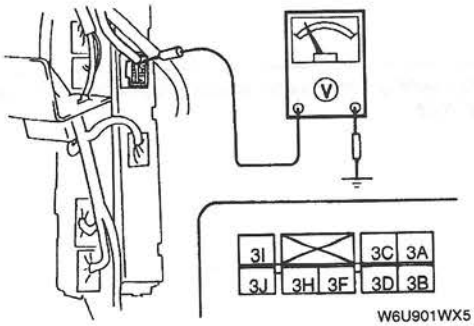 W6U901WX5	Yes	Replace CPU. ☞ 09–40 CPU REMOVAL/INSTALLATION
		No	Go to step 9.
9	Remove column cover. Measure voltage at terminal 2E at light switch (headlight switch) connector of wiring harness. Is voltage **5 V**? 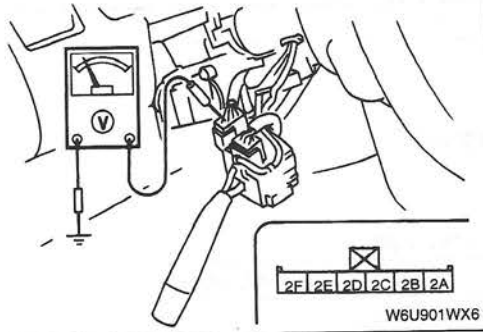 W6U901WX6	Yes	Go to next step.
		No	Repair wiring harness between CPU and light switch (headlight switch).
10	Inspect light switch (headlight switch). ☞ 09–18 LIGHT SWITCH INSPECTION Is light switch (headlight switch) okay?	Yes	Replace CPU. ☞ 09–40 CPU REMOVAL/INSTALLATION
		No	Replace light switch (headlight switch). ☞ 09–18 LIGHT SWITCH REMOVAL/INSTALLATION

9	**License plate light does not illuminate**

TROUBLESHOOTING HINTS

Malfunction in license plate light ground circuit

① License plate light does not illuminate

- Malfunction in wiring harness between license plate light and ground

Malfunction in license plate light operation circuit

① License plate light does not illuminate

- License plate light bulb malfunction
- Malfunction in wiring harness between TNS relay and license plate light

STEP	INSPECTION		ACTION
1	Inspect license plate light bulb. Is bulb okay?	Yes	Go to next step.
		No	Replace license plate light bulb.

STEP	INSPECTION		ACTION
2	Remove license plate light. Connect license plate light connector. Turn headlight switch to first position. Measure voltage at terminal A at license plate light connector of wiring harness. Is voltage **B+**? 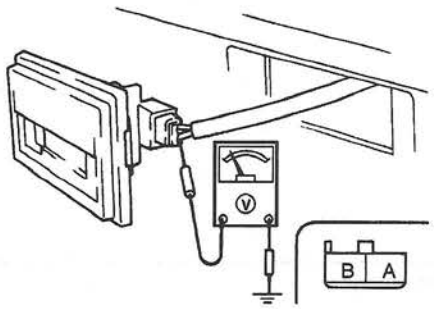 W6U901WX7	Yes	Repair wiring harness between license plate light and ground.
		No	Repair wiring harness between TNS relay and license plate light.

10	**Taillights do not illuminate**

TROUBLESHOOTING HINTS
Malfunction in taillight ground circuit
① Taillights do not illuminate
- Malfunction in wiring harness between rear combination light and ground

Malfunction in taillight operation circuit
① Taillights do not illuminate
- Brake light/taillight bulb malfunction
- Malfunction in wiring harness between TNS relay and rear combination light

STEP	INSPECTION		ACTION
1	Inspect brake light/taillight bulb. Is bulb okay?	Yes	Go to next step.
		No	Replace brake light/taillight bulb.
2	Partially peel off trunk side trim. ☞ 09–17 TRUNK SIDE TRIM REMOVAL/INSTALLATION Remove rear combination light. Turn headlight switch to first or second position. Measure voltage at terminal F at rear combination light connector of wiring harness. Is voltage **B+**? 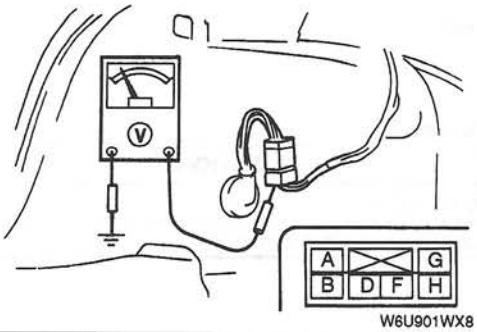 W6U901WX8	Yes	Repair wiring harness between rear combination light and ground.
		No	Repair wiring harness between TNS relay and rear combination light.

11	**Parking lights do not illuminate**

TROUBLESHOOTING HINTS
Malfunction in parking light ground circuit
① Parking lights do not illuminate
- Malfunction in wiring harness between parking light and ground

Malfunction in parking light operation circuit
① Parking lights do not illuminate
- Front combination light bulb malfunction
- Malfunction in wiring harness between TNS relay and front combination light

STEP	INSPECTION		ACTION
1	Inspect front combination light bulb. Is bulb okay?	Yes	Go to next step.
		No	Replace front combination light bulb.
2	Remove front combination light. Connect front combination light connector. Turn headlight switch to first position. Measure voltage at terminal A at front combination light connector of wiring harness. Is voltage **B+**? 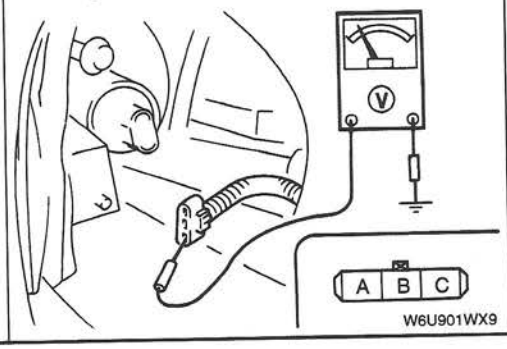 W6U901WX9	Yes	Repair wiring harness between front combination light and ground.
		No	Repair wiring harness between TNS relay and front combination light.

09–01K TROUBLESHOOTING [INTERIOR LIGHTING SYSTEM]

FOREWORD 09–01K–1
INTERIOR LIGHTING SYSTEM SYMPTOM TROUBLESHOOTING 09–01K–1
Diagnostic Index 09–01K–1
Symptom Troubleshooting 09–01K–1

FOREWORD

W6U901W46

- Refer to 00–00 GENERAL INFORMATION and thoroughly read and understand the basic flow of troubleshooting to properly perform the procedures.

INTERIOR LIGHTING SYSTEM SYMPTOM TROUBLESHOOTING

W6U901W47

Diagnostic Index

- Use the chart below to verify the symptoms of the trouble in order to diagnose the appropriate area.

No.	Malfunction Symptom
1	Interior light does not illuminate
2	When interior light switch is at DOOR, interior light does not illuminate (When interior light switch is at ON, interior light illuminates)
3	When interior light switch is at DOOR, interior lighting control system does not operate properly
4	Vanity mirror illumination does not turn on

Symptom Troubleshooting

1 Interior light does not illuminate

TROUBLESHOOTING HINTS
Malfunction in interior light power supply
① Interior light does not illuminate
- ROOM 15 A fuse malfunction
- Malfunction in wiring harness between ROOM 15 A fuse and interior light

Malfunction in interior light operation circuit
① Interior light does not illuminate
- Interior light malfunction
- Interior light bulb malfunction

STEP	INSPECTION		ACTION
1	Is ROOM 15 A fuse okay? 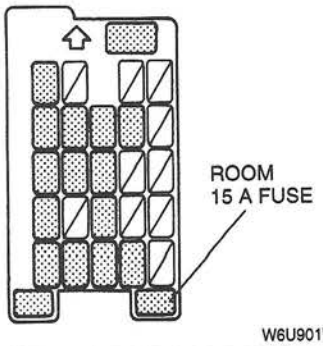 W6U901WN0	Yes	Go to next step.
		No	Replace fuse after repairing wiring harness.
2	Inspect interior light bulb. Is interior light bulb okay?	Yes	Go to next step.
		No	Replace interior light bulb. ☞ 09–18 INTERIOR LIGHT REMOVAL/INSTALLATION

STEP	INSPECTION		ACTION
3	Remove interior light without disconnecting connector. ☞ 09–18 INTERIOR LIGHT REMOVAL/INSTALLATION Measure voltage at terminal B at interior light connector of wiring harness. Is voltage **B+**? 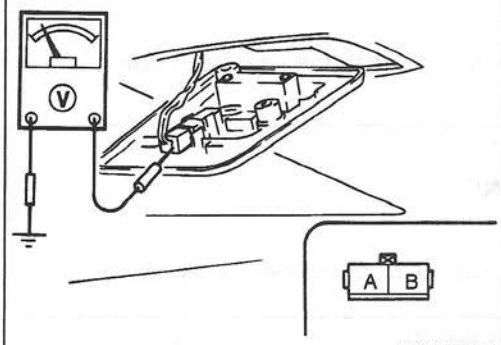 W6U901WN7	Yes	Go to next step.
		No	Repair wiring harness between ROOM 15 A fuse and interior light.
4	Inspect interior light. ☞ 09–18 INTERIOR LIGHT INSPECTION Is interior light okay?	Yes	Repair wiring harnesses between interior light and ground, interior light and CPU.
		No	Replace interior light. ☞ 09–18 INTERIOR LIGHT REMOVAL/INSTALLATION

2	**When interior light switch is at DOOR, interior light does not illuminate (When interior light switch is at ON, interior light illuminates)**

TROUBLESHOOTING HINTS
Malfunction in interior light timer operation circuit
① Interior light does not illuminate
- Interior light malfunction
- CPU malfunction
- Door switch malfunction
- Malfunction in wiring harness between CPU and door switch

STEP	INSPECTION		ACTION
1	Remove driver's side front scuff plate. Remove driver's side front side trim. Remove nut fixed in joint box and remove CPU from joint box. Set interior light switch at DOOR. Measure voltage at terminal 1F at joint box. Is voltage **B+**? 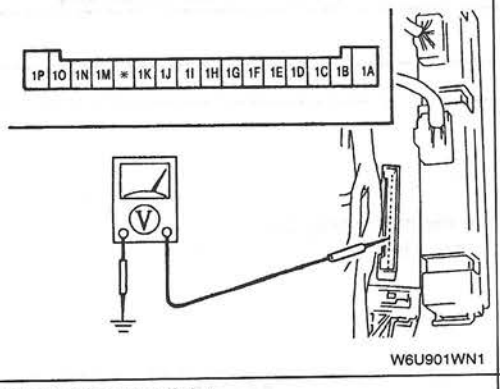 W6U901WN1	Yes	Go to step 3.
		No	Go to step 2.
2	Inspect interior light. ☞ 09–18 INTERIOR LIGHT INSPECTION Is interior light okay?	Yes	Repair wiring harness between interior light and CPU.
		No	Replace interior light. ☞ 09–18 INTERIOR LIGHT REMOVAL/INSPECTION
3	Inspect CPU. ☞ 09–40 CPU INSPECTION Is CPU okay?	Yes	Go to next step.
		No	Replace CPU. ☞ 09–40 CPU REMOVAL/INSTALLATION
4	Open all doors. Check for continuity between 1I at joint box and door switch. Is there continuity? 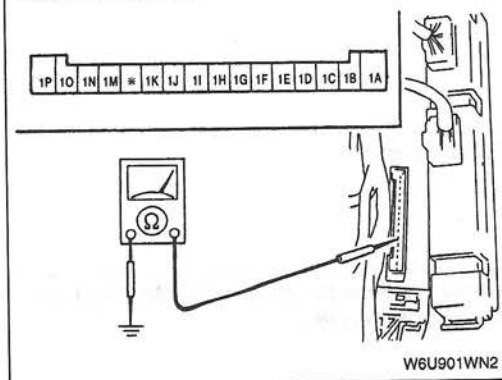 W6U901WN2	Yes	Go to next step.
		No	Repair wiring harness between joint box and door switch.
5	Inspect door switch. ☞ 09–18 DOOR SWITCH INSPECTION Is door switch okay?	Yes	Replace CPU. ☞ 09–40 CPU REMOVAL/INSTALLATION
		No	Replace door switch. ☞ 09–18 DOOR SWITCH REMOVAL/INSTALLATION

3	When interior light switch is at DOOR, interior lighting control system does not operate properly		
TROUBLESHOOTING HINTS Malfunction in interior lighting control system operation circuit ① Interior lighting control system does not operate properly • CPU malfunction			
STEP	**INSPECTION**		**ACTION**
—	Remove driver's side front scuff plate. Remove driver's side front side trim. Remove nut fixed in joint box and remove CPU from joint box. Inspect terminal 1B and 1K of joint box, terminal 2O of CPU connector. ☞ 09–40 CPU INSPECTION Is each terminal okay?	Yes	When terminal 1B at joint box is not okay, inspect ROOM 15 A fuse and key reminder switch. ☞ 09–21 KEY REMINDER SWITCH INSPECTION When terminal 1K at joint box is not okay, inspect door lock switch. ☞ 09–14 DOOR LOCK SWITCH INSPECTION When terminal 2O at CPU connector B is not okay, inspect ROOM 15 A fuse and keyless unit. ☞ 09–14 KEYLESS UNIT INSPECTION
		No	Replace CPU. ☞ 09–40 CPU REMOVAL/INSTALLATION

4	Vanity mirror illumination does not turn on		
TROUBLESHOOTING HINTS Malfunction in vanity mirror illumination power supply/ground circuit ① Vanity mirror illumination does not turn on • ROOM 15 A fuse malfunction • Malfunction in wiring harness between ROOM 15 A fuse and vanity mirror illumination • Malfunction in wiring harness between vanity mirror illumination and ground Malfunction in vanity mirror illumination operation circuit ① Vanity mirror illumination does not turn on • Vanity mirror illumination bulb malfunction • Vanity mirror illumination malfunction			
STEP	**INSPECTION**		**ACTION**
1	Is ROOM 15 A fuse okay? 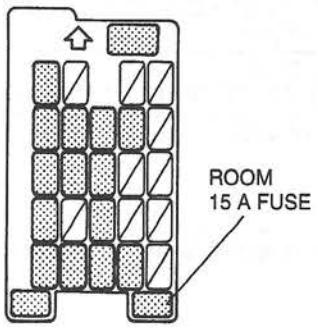 W6U901WN4	Yes	Go to next step.
		No	Replace fuse after repairing wiring harness.
2	Remove sunvisor without disconnecting vanity mirror illumination connector. Measure voltage at terminal A at vanity mirror illumination connector of wiring harness. Is voltage B+? 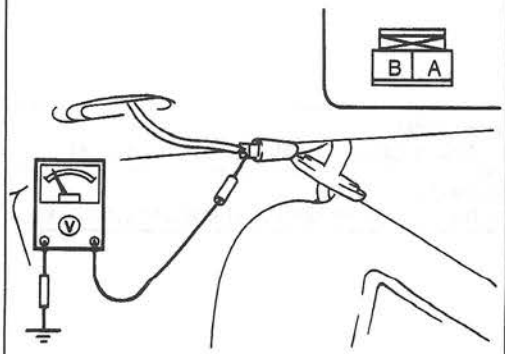 W6U901WN5	Yes	Go to next step.
		No	Repair wiring harness between ROOM 15 A fuse and vanity mirror illumination.

STEP	INSPECTION		ACTION
3	Inspect vanity mirror illumination bulb. Is bulb okay?	Yes	Go to next step.
		No	Replace vanity mirror illumination bulb. ☞ 09–18 VANITY MIRROR ILLUMINATION REMOVAL/INSTALLATION
4	Open vanity mirror cover. Measure voltage at terminal B at vanity mirror illumination connector of wiring harness. Is voltage **B+**? 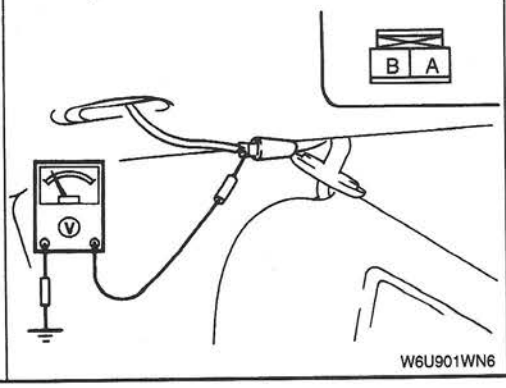 W6U901WN6	Yes	Repair wiring harness between vanity mirror illumination and ground.
		No	Replace sunvisor. ☞ 09–17 HEADLINER REMOVAL/INSTALLATION

09–01L TROUBLESHOOTING [SIGNAL LIGHTING SYSTEM]

FOREWORD **09–01L–1**
SIGNAL LIGHTING SYSTEM SYMPTOM TROUBLESHOOTING **09–01L–1**
Diagnostic Index **09–01L–1**
Symptom Troubleshooting **09–01L–2**

FOREWORD

W6U901W51

- Refer to 00–00 GENERAL INFORMATION and thoroughly read and understand the basic flow of troubleshooting to properly perform the procedures.

SIGNAL LIGHTING SYSTEM SYMPTOM TROUBLESHOOTING

W6U901W52

Diagnostic Index

- Use the chart below to verify the symptoms of the trouble in order to diagnose the appropriate area.

No.	Malfunction Symptom
1	Turn and hazard warning functions do not operate
2	Turn signal function does not operate (Hazard warning function operates)
3	Hazard warning function does not operate (Turn signal function operates)
4	Left or right turn signal function does not operate (Hazard warning function operates)
5	Brake lights do not illuminate
6	Brake light on one side does not illuminate
7	High-mount brake light does not illuminate
8	Back-up lights do not illuminate
9	One back-up light does not illuminate

Symptom Troubleshooting

1	Turn and hazard warning functions do not operate

TROUBLESHOOTING HINTS

Malfunction in turn and hazard warning functions power supply/ground circuit

① Turn signal and hazard warning lights do not illuminate

- HAZARD 15 A fuse malfunction
- TURN 10 A fuse malfunction
- Malfunction in wiring harness between HAZARD 15 A fuse and flasher unit
- Malfunction in wiring harness between TURN 10 A fuse and light switch (turn switch)
- Malfunction in wiring harness between flasher unit and ground
- Malfunction in wiring harness between hazard warning switch and ground

Malfunction in turn and hazard warning functions operation circuit

① Turn signal and hazard warning lights do not illuminate

- Light switch (turn switch) malfunction
- Flasher unit malfunction
- Hazard warning switch malfunction
- Malfunction in wiring harness between light switch (turn switch) and flasher unit
- Malfunction in wiring harness between flasher unit and hazard warning switch

STEP	INSPECTION		ACTION
1	Are HAZARD 15 A fuse and TURN 10 A fuse okay? 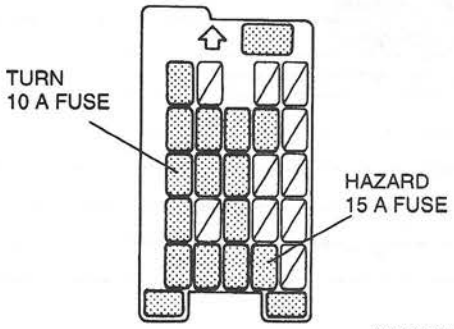 W6U901WP0	Yes	Go to next step.
		No	Replace fuse after repairing wiring harness.
2	Measure voltage at terminal A at flasher unit connector of wiring harness. Is voltage **B+**? 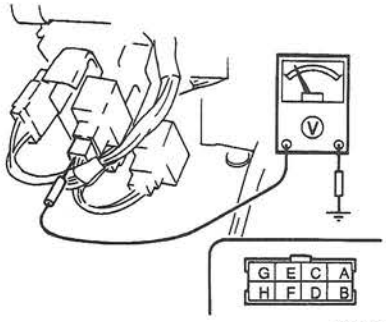 W6U901WP1	Yes	Go to next step.
		No	Repair wiring harness between HAZARD 15 A fuse and flasher unit.

STEP	INSPECTION		ACTION
3	Disconnect the flasher unit connector. Check for continuity between terminal B at flasher unit connector of wiring harness and ground. Is there continuity? 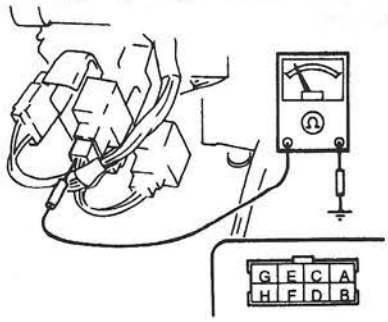 W6U901WP2	Yes	Go to next step.
		No	Repair wiring harness between flasher unit and ground.
4	Connect flasher unit connector. Inspect flasher unit. ☞ 09–18 FLASHER UNIT INSPECTION Is flasher unit okay?	Yes	Go to next step.
		No	Replace flasher unit. ☞ 09–18 FLASHER UNIT REMOVAL/INSTALLATION
5	Remove column cover. Remove light switch (turn switch) without disconnecting connectors. Turn ignition switch to ON. Measure voltage at terminal 2C at light switch (turn switch) connector of wiring harness. Is voltage **B+**? 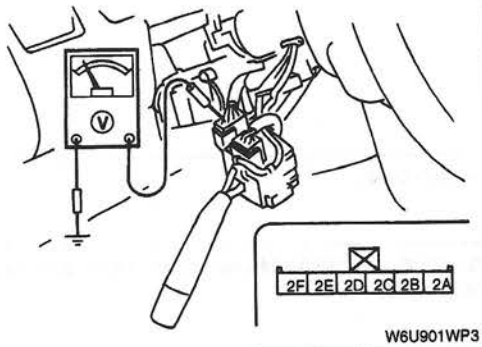 W6U901WP3	Yes	Go to next step.
		No	Repair wiring harness between TURN 10 A fuse and turn switch.
6	Turn ignition switch to LOCK. Inspect light switch (turn switch). ☞ 09–18 LIGHT SWITCH INSPECTION Is light switch (turn switch) okay?	Yes	Go to next step.
		No	Replace light switch (turn switch). ☞ 09–18 LIGHT SWITCH REMOVAL/INSTALLATION

STEP	INSPECTION		ACTION
7	Turn ignition switch to ON. Turn turn switch to left. Measure voltage at terminal F at flasher unit connector of wiring harness. Is voltage **B+**? 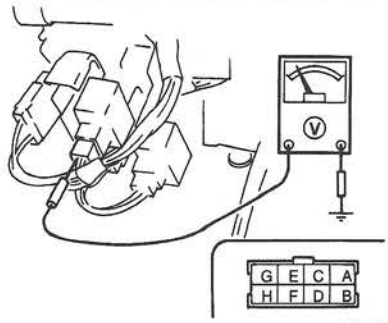 W6U901WP4	Yes	Go to next step.
		No	Repair wiring harness between light switch (turn switch) and flasher unit.
8	Turn turn switch to right. Measure voltage at terminal D at flasher unit connector of wiring harness. Is voltage **B+**? 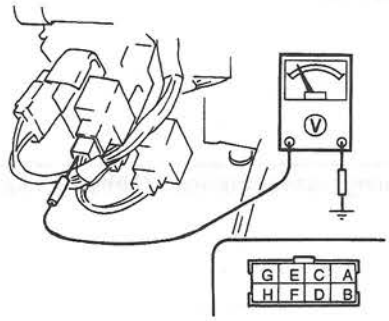 W6U901WP5	Yes	Turn ignition switch to LOCK. Go to next step.
		No	Repair wiring harness between light switch (turn switch) and flasher unit.
9	Measure voltage at terminal A at hazard warning switch connector of wiring harness. Is voltage **B+**? 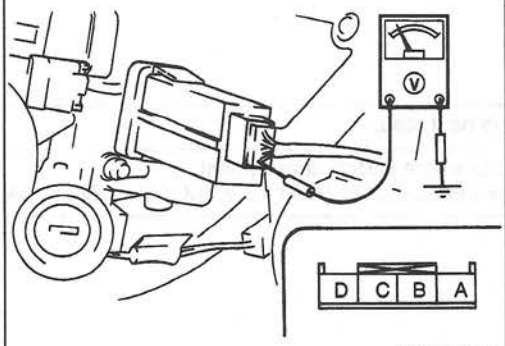 W6U901WP6	Yes	Go to next step.
		No	Repair wiring harness between flasher unit and hazard warning switch.
10	Inspect hazard warning switch. ☞ 09–18 HAZARD WARNING SWITCH INSPECTION Is hazard warning switch okay?	Yes	Repair wiring harness between hazard warning switch and ground.
		No	Replace hazard warning switch. ☞ 09–18 HAZARD WARNING SWITCH REMOVAL/INSTALLATION

2	Turn signal function does not operate (Hazard warning function operates)		
TROUBLESHOOTING HINTS Malfunction in turn signal function power supply circuit ① Turn signal lights do not illuminate (Hazard warning lights illuminate) • TURN 10 A fuse malfunction • Malfunction in wiring harness between TURN 10 A fuse and light switch (turn switch) Malfunction in turn signal function operation circuit ① Turn signal lights do not illuminate (Hazard warning lights illuminate) • Light switch (turn switch) malfunction • Flasher unit malfunction • Malfunction in wiring harness between light switch (turn switch) and flasher unit			
STEP	**INSPECTION**		**ACTION**
1	Is TURN 10 A fuse okay? 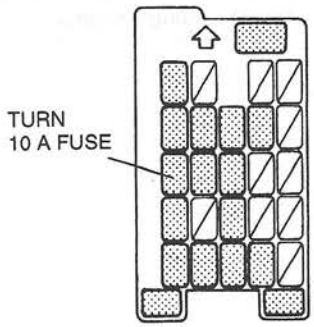 W6U901WP7	Yes	Go to next step.
		No	Replace fuse after repairing wiring harness.
2	Remove column cover. Remove light switch (turn switch) without disconnecting connectors. Turn ignition switch to ON. Measure voltage at terminal 2C at light switch (turn switch) connector of wiring harness. Is voltage **B+**? 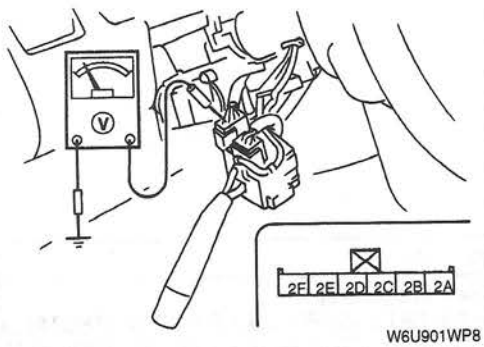 W6U901WP8	Yes	Go to next step.
		No	Repair wiring harness between TURN 10 A fuse and light switch (turn switch).
3	Inspect light switch (turn switch). ☞ 09–18 LIGHT SWITCH INSPECTION Is light switch (turn switch) okay?	Yes	Go to next step.
		No	Replace light switch (turn switch). ☞ 09–18 LIGHT SWITCH REMOVAL/INSTALLATION
4	Inspect flasher unit. ☞ 09–18 FLASHER UNIT INSPECTION Is flasher unit okay?	Yes	Repair wiring harness between light switch (turn switch) and flasher unit.
		No	Replace flasher unit. ☞ 09–18 FLASHER UNIT REMOVAL/INSTALLATION

3	Hazard warning function does not operate (Turn signal function operates)		
TROUBLESHOOTING HINTS Malfunction in hazard warning function power supply circuit ① Hazard warning lights do not illuminate (Turn signal lights illuminate) • HAZARD 15 A fuse malfunction • Malfunction in wiring harness between HAZARD 15 A fuse and flasher unit Malfunction in hazard warning function operation circuit ① Hazard warning lights do not illuminate (Turn signal lights illuminate) • Flasher unit malfunction • Hazard warning switch malfunction • Malfunction in wiring harness between flasher unit and hazard warning switch • Malfunction in wiring harness between hazard warning switch and ground			
STEP	**INSPECTION**		**ACTION**
1	Is HAZARD 15 A fuse okay? 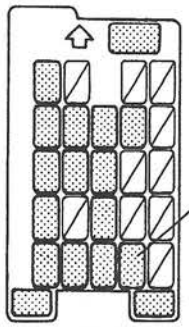 W6U901WP9	Yes	Go to next step.
		No	Replace fuse after repairing wiring harness.
2	Measure voltage at terminal A at flasher unit connector of wiring harness. Is voltage **B+**? 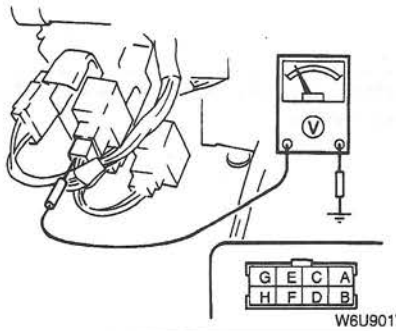 W6U901WPA	Yes	Go to next step.
		No	Repair wiring harness between HAZARD 15 A fuse and flasher unit.
3	Inspect flasher unit. ☞ 09–18 FLASHER UNIT INSPECTION Is flasher unit okay?	Yes	Go to next step.
		No	Replace flasher unit. ☞ 09–18 FLASHER UNIT REMOVAL/INSTALLATION
4	Measure voltage at terminal A at hazard warning switch connector of wiring harness. Is voltage **B+**? 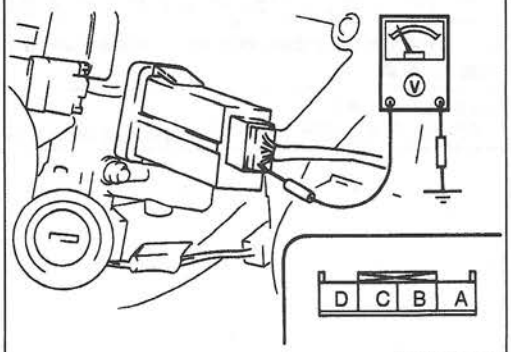 W6U901WPB	Yes	Go to next step.
		No	Repair wiring harness between flasher unit and hazard warning switch.

STEP	INSPECTION		ACTION
5	Inspect hazard warning switch. ☞ 09–18 HAZARD WARNING SWITCH INSPECTION Is hazard warning switch okay?	Yes	Repair wiring harness between hazard warning switch and ground.
		No	Replace hazard warning switch. ☞ 09–18 HAZARD WARNING SWITCH REMOVAL/INSTALLATION

4	**Left or right turn signal function does not operate (Hazard warning function operates)**		
TROUBLESHOOTING HINTS Malfunction in turn signal function operation circuit ① Left or right turn signal light does not illuminate (Hazard warning lights illuminate) • Light switch (turn switch) malfunction • Flasher unit malfunction • Malfunction in wiring harness between turn switch and flasher unit			
STEP	**INSPECTION**		**ACTION**
1	Inspect light switch (turn switch). ☞ 09–18 LIGHT SWITCH INSPECTION Is light switch (turn switch) okay?	Yes	Go to next step.
		No	Replace light switch (turn switch). ☞ 09–18 LIGHT SWITCH REMOVAL/INSTALLATION
2	Inspect flasher unit. ☞ 09–18 FLASHER UNIT INSPECTION Is flasher unit okay?	Yes	Repair wiring harness between turn switch and flasher unit.
		No	Replace flasher unit. ☞ 09–18 FLASHER UNIT REMOVAL/INSTALLATION

5	Brake lights do not illuminate		
TROUBLESHOOTING HINTS Malfunction in brake lights power supply/ground circuit ① Brake lights do not illuminate • STOP 15 A fuse malfunction • Malfunction in wiring harness between STOP 15 A fuse and brake switch • Malfunction in wiring harness between brake light and ground Malfunction in brake lights operation circuit ① Brake lights do not illuminate • Brake switch malfunction • Brake light bulb malfunction • Malfunction in wiring harness between brake switch and brake lights			
STEP	**INSPECTION**		**ACTION**
1	Is STOP 15 A fuse okay? 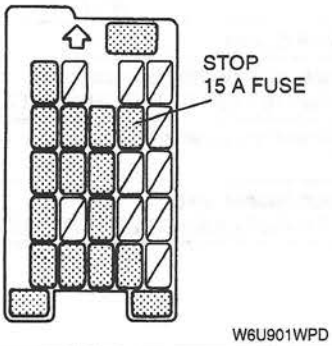 W6U901WPD	Yes	Go to next step.
		No	Replace fuse after repairing wiring harness.
2	Measure voltage at terminal A at brake switch connector of wiring harness. Is voltage **B+**? 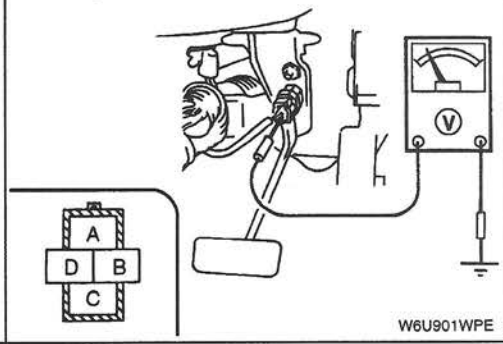 W6U901WPE	Yes	Go to next step.
		No	Repair wiring harness between STOP 15 A fuse and brake switch.
3	Inspect brake switch. ☞ 04–02 BRAKE SWITCH INSPECTION Is brake switch okay?	Yes	Repair wiring harness between brake switch and brake lights.
		No	Replace brake switch. ☞ 04–02 BRAKE SWITCH REMOVAL/INSTALLATION

6	Brake light on one side does not illuminate		
TROUBLESHOOTING HINTS Malfunction in brake lights operation circuit ① Brake light on one side does not illuminate • Brake light bulb malfunction • Malfunction in wiring harness between brake switch and brake light Malfunction in brake lights ground circuit ① Brake light on one side does not illuminate • Malfunction in wiring harness between brake light and ground			
STEP	**INSPECTION**		**ACTION**
1	Partially peel off trunk side trim. ☞ 09–17 TRUNK SIDE TRIM REMOVAL/INSTALLATION Remove rear combination light. Inspect brake light bulb. Is brake light bulb okay?	Yes	Go to next step.
		No	Replace brake light/taillight bulb. ☞ 09–18 REAR COMBINATION LIGHT REMOVAL/INSTALLATION
2	Press brake pedal. Measure voltage at terminal B at rear combination light connector of wiring harness. Is voltage **B+**? 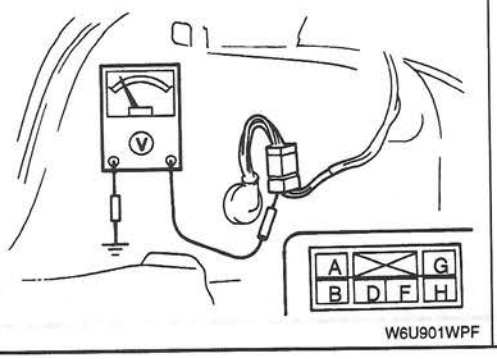 W6U901WPF	Yes	Repair wiring harness between rear combination light and ground.
		No	Repair wiring harness between brake switch and rear combination light.

7	High-mount brake light does not illuminate		
TROUBLESHOOTING HINTS Malfunction in high-mount brake light operation circuit ① High-mount brake light does not illuminate • High-mount brake light bulb malfunction • Malfunction in wiring harness between brake switch and high-mount brake light Malfunction in high-mount brake light ground circuit ① High-mount brake light does not illuminate • Malfunction in wiring harness between high-mount brake light and ground			
STEP	**INSPECTION**		**ACTION**
1	Remove high-mount brake light bulb. ☞ 09–18 HIGH-MOUNT BRAKE LIGHT BULB REMOVAL/INSTALLATION Inspect high-mount brake light bulb. Is bulb okay?	Yes	Go to next step.
		No	Replace high-mount brake light bulb. ☞ 09–18 HIGH-MOUNT BRAKE LIGHT BULB REMOVAL/INSTALLATION
2	Press brake pedal. Measure voltage at terminal A at high-mount brake light connector of wiring harness. Is voltage **B+**? 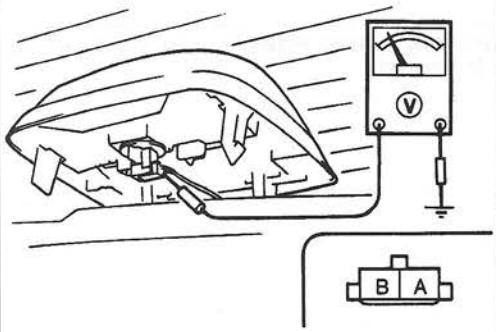 W6U901WPG	Yes	Repair wiring harness between high-mount brake light and ground.
		No	Repair wiring harness between brake switch and high-mount brake light.

8	Back-up lights do not illuminate		
TROUBLESHOOTING HINTS Malfunction in back-up lights operation circuit ① Back-up lights do not illuminate • Back-up light switch or transaxle range switch malfunction • Back-up light bulb malfunction • Malfunction in wiring harness between back-up light switch, transaxle range switch and back-up light bulb Malfunction in back-up lights ground circuit ① Back-up lights do not illuminate • Malfunction in wiring harness between back-up light bulb and ground			
STEP	**INSPECTION**		**ACTION**
1	Is it a MTX vehicle?	Yes	Go to step 2.
		No	Go to step 3.
2	Inspect back-up light switch. ☞ 09–18 BACK-UP LIGHT SWITCH INSPECTION Is back-up light switch okay?	Yes	Go to step 4.
		No	Replace back-up light switch. ☞ 09–18 BACK-UP LIGHT SWITCH REMOVAL/INSTALLTION
3	Inspect transaxle range switch. ☞ 05–17A ELECTRICAL SYSTEM COMPONENT [LA4A-EL] ☞ 05–17B TRANSAXLE RANGE SWITCH INSPECTION [GF4A-EL] Is transaxle range switch okay?	Yes	Go to step 5.
		No	Replace transaxle range switch. ☞ 05–17A TRANSAXLE RANGE SWITCH REMOVAL/INSTALLATION [LA4A-EL] ☞ 05–17B TRANSAXLE RANGE SWITCH REMOVAL/INSTALLATION [GF4A-EL]
4	Turn ignition switch to ON. Move shift lever knob to reverse position. Measure voltage at terminal D at rear combination light connector of wiring harness. Is voltage **B+**? 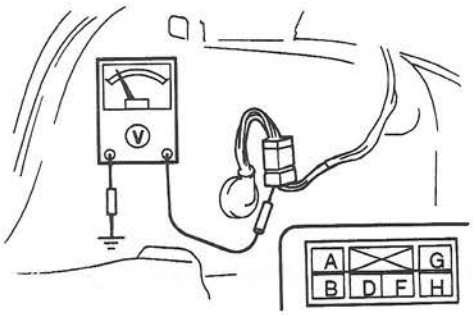 W6U901WPH	Yes	Repair wiring harness between back-up light and ground.
		No	Repair wiring harness between back-up light switch and back-up light.
5	Turn ignition switch to ON. Move selector lever to reverse position. Measure voltage at terminal D at rear combination light connector of wiring harness. Is voltage **B+**? 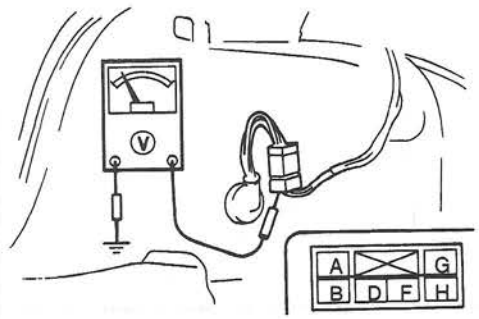 W6U901WPJ	Yes	Repair wiring harness between back-up light switch and back-up light.
		No	Repair wiring harness between transaxle range switch and back-up light.

9	One back-up light does not illuminate		
TROUBLESHOOTING HINTS Malfunction in back-up light operation circuit ① One back-up light does not illuminate • Back-up light bulb malfunction • Malfunction in wiring harness between back-up light switch or transaxle range switch malfunction and back-up light bulb Malfunction in back-up light ground circuit ① One back-up light does not illuminate • Malfunction in wiring harness between back-up light bulb and ground			
STEP	**INSPECTION**		**ACTION**
1	Partially peel off trunk side trim. ☞ 09–17 TRUNK SIDE TRIM REMOVAL/INSTALLATION Remove rear combination light. Inspect back-up light bulb not illuminating. Is bulb okay?	Yes	Go to next step.
		No	Replace back-up light bulb. ☞ 09–18 REAR COMBINATION LIGHT REMOVAL/INSTALLATION
2	Is it a MTX vehicle?	Yes	Go to step 3.
		No	Go to step 4.
3	Turn ignition switch to ON. Move shift lever knob to reverse position. Measure voltage at terminal D at rear combination light connector of wiring harness. (Inspect only back-up light which is not illuminating.) Is voltage **B+**? 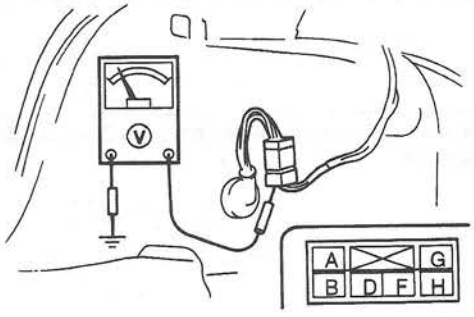 W6U901WPK	Yes	Repair wiring harness between back-up light and ground.
		No	Repair wiring harness between back-up light switch and back-up light.
4	Turn ignition switch to ON. Move selector lever to reverse position. Measure voltage at terminal D at rear combination light connector of wiring harness. (Inspect only back-up light which is not illuminating.) Is voltage **B+**? 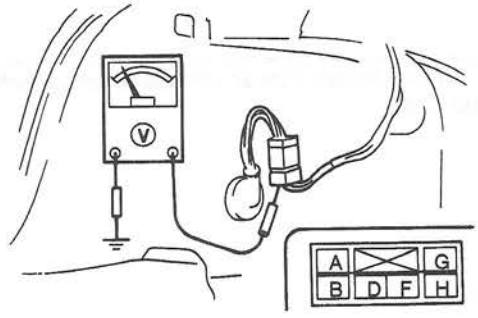 W6U901WPL	Yes	Repair wiring harness between back-up light and ground.
		No	Repair wiring harness between transaxle range switch and back-up light.

09–01M TROUBLESHOOTING [WIPER/WASHER SYSTEMS]

FOREWORD 09–01M–1
WIPER/WASHER SYSTEMS SYMPTOM TROUBLESHOOTING 09–01M–1
Diagnostic Index 09–01M–1
Symptom Troubleshooting 09–01M–2

FOREWORD

W6U901W56

- Refer to 00–00 GENERAL INFORMATION and thoroughly read and understand the basic flow of troubleshooting to properly perform the procedures.

WIPER/WASHER SYSTEMS SYMPTOM TROUBLESHOOTING

W6U901W57

Diagnostic Index

No.	Symptom
1	Wipers and washer do not operate
2	Low speed wiper operation is not possible (Other functions operate normally)
3	High speed wiper operation is not possible (Other functions operate normally)
4	Wipers continue operation after windshield wiper and washer switch is turned to OFF
5	Intermittent wiper operation is not possible (Other functions operate normally)
6	Wipers continue intermittent operation
7	One-touch wiper operation is not possible (Other functions operate normally)
8	Autostop operation does not work (Wipers immediately stop when windshield wiper and washer switch is turned to OFF)
9	Washer does not operate (Wipers operate)
10	Washer operates with windshield washer switch turned to OFF
11	Washer fluid-level warning light remains illuminated when washer fluid level is above LOW (Engine is running)
12	Washer fluid-level warning light does not illuminate when washer fluid level is below LOW (Engine is running)

Symptom Troubleshooting

1	Wipers and washer do not operate

TROUBLESHOOTING HINTS
Malfunction in windshield wiper and washer switch power supply circuit
① Wipers do not operate
- WIPER 20 A fuse malfunction
- Windshield wiper and washer switch malfunction
- Malfunction in wiring harness between WIPER 20 A fuse and windshield wiper and washer switch

② Washer does not operate
- WIPER 20 A fuse malfunction
- Windshield wiper and washer switch malfunction
- Malfunction in wiring harness between WIPER 20 A fuse and windshield wiper and washer switch

Malfunction in windshield wiper and washer switch input signal circuit
① Wipers do not operate
- Windshield wiper and washer switch malfunction

② Washer does not operate
- Windshield wiper and washer switch malfunction

STEP	INSPECTION		ACTION
1	Is WIPER 20 A fuse okay?	Yes	Go to next step.
	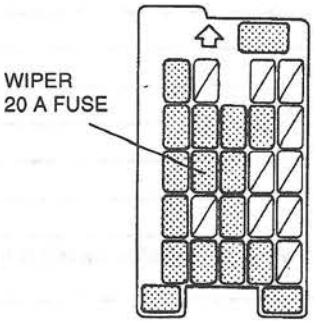 W6U901WQ0	No	Replace fuse after repairing wiring harness.
2	Remove column cover. Remove windshield wiper and washer switch without disconnecting windshield wiper and washer switch connector. Turn ignition switch to ON. Measure voltage at terminal B at windshield wiper and washer switch connector of wiring harness. Is voltage **B+**?	Yes	Replace windshield wiper and washer switch.
	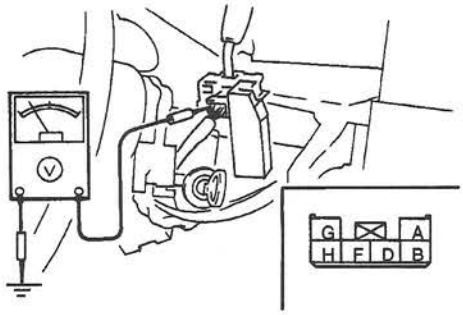 W6U901WQ1	No	Repair wiring harness between WIPER 20 A fuse and windshield wiper and washer switch.

2	Low speed wiper operation is not possible (Other functions operate normally)

TROUBLESHOOTING HINTS
Malfunction in windshield wiper and washer switch input signal circuit
① Low speed wiper operation is not possible
- Windshield wiper and washer switch malfunction

STEP	INSPECTION		ACTION
—	—	—	Replace windshield wiper and washer switch.

3	High speed wiper operation is not possible (Other functions operate normally)		
TROUBLESHOOTING HINTS Malfunction in windshield wiper and washer switch input signal circuit ① High speed wiper operation is not possible • Windshield wiper and washer switch malfunction			
STEP	**INSPECTION**		**ACTION**
—	—	—	Replace windshield wiper and washer switch.

4	Wipers continue operation after windshield wiper and washer switch is turned to OFF		
TROUBLESHOOTING HINTS Malfunction in windshield wiper and washer switch input signal circuit ① Wipers continue operation • Windshield wiper and washer switch malfunction Malfunction in windshield wiper motor input signal circuit ① Wipers continue operation • Windshield wiper motor malfunction			
STEP	**INSPECTION**		**ACTION**
—	Inspect windshield wiper and washer switch. ☞ 09–19 WINDSHIELD WIPER AND WASHER SWITCH INSPECTION Is windshield wiper and washer switch okay?	Yes	Replace windshield wiper motor.
		No	Replace windshield wiper and washer switch.

5	Intermittent wiper operation is not possible (Other functions operate normally)		
TROUBLESHOOTING HINTS Malfunction in windshield wiper and washer switch ground circuit ① Intermittent wiper operation is not possible • Windshield wiper and washer switch malfunction • Malfunction in wiring harness between windshield wiper and washer switch and ground Malfunction in windshield wiper and washer switch input signal circuit ① Intermittent wiper operation is not possible • Windshield wiper and washer switch malfunction			
STEP	**INSPECTION**		**ACTION**
—	Inspect windshield wiper and washer switch. ☞ 09–19 WINDSHIELD WIPER AND WASHER SWITCH INSPECTION Is windshield wiper and washer switch okay?	Yes	Repair wiring harness between windshield wiper and washer switch and ground.
		No	Replace windshield wiper and washer switch.

6	Wipers continue intermittent operation		
TROUBLESHOOTING HINTS Malfunction in windshield wiper and washer switch input signal circuit ① Wipers continue intermittent operation • Windshield wiper and washer switch malfunction			
STEP	**INSPECTION**		**ACTION**
—	—	—	Replace windshield wiper and washer switch.

7	One-touch wiper operation is not possible (Other functions operate normally)		
TROUBLESHOOTING HINTS Malfunction in windshield wiper and washer switch input signal circuit ① One-touch wiper operation is not possible • Windshield wiper and washer switch malfunction			
STEP	**INSPECTION**		**ACTION**
—	—	—	Replace windshield wiper and washer switch.

8	**Autostop operation does not work (Wipers immediately stop when windshield wiper and washer switch is turned to OFF)**

TROUBLESHOOTING HINTS

Malfunction in windshield wiper motor power supply circuit

① Autostop operation does not work
- Windshield wiper motor malfunction
- Malfunction in wiring harness between WIPER 20 A fuse and windshield wiper motor

Malfunction in windshield wiper and washer switch input signal circuit

① Autostop operation does not work
- Windshield wiper and washer switch malfunction
- Malfunction in wiring harness between windshield wiper and washer switch and windshield wiper motor

Malfunction in windshield wiper motor operation circuit

① Autostop operation does not work
- Windshield wiper motor malfunction

STEP	INSPECTION		ACTION
1	Turn ignition switch to ON. Measure voltage at terminal F at windshield wiper motor connector of wiring harness. Is voltage **B+**? 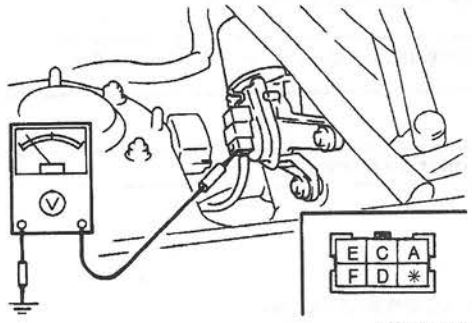 W6U901WQ2	Yes	Go to next step.
		No	Repair wiring harness between WIPER 20 A fuse and windshield wiper motor.
2	Inspect windshield wiper and washer switch. ☞ 09–19 WINDSHIELD WIPER AND WASHER SWITCH INSPECTION Is windshield wiper and washer switch okay?	Yes	Go to next step.
		No	Replace windshield wiper and washer switch.
3	Inspect windshield wiper motor. ☞ 09–19 WINDSHIELD WIPER MOTOR INSPECTION Is windshield wiper motor okay?	Yes	Repair wiring harness between windshield wiper and washer switch and windshield wiper motor.
		No	Replace windshield wiper motor.

9	Washer does not operate (Wipers operate)		

TROUBLESHOOTING HINTS

Malfunction in windshield wiper and washer switch input signal circuit

① Washer does not operate
- Windshield wiper and washer switch malfunction
- Malfunction in wiring harness between windshield wiper and washer switch and windshield washer motor

Malfunction in windshield washer motor operation circuit

① Washer does not operate
- Windshield washer motor malfunction
- Malfunction in wiring harness between windshield washer motor and ground

STEP	INSPECTION		ACTION
1	Remove column cover. Remove windshield wiper and washer switch without disconnecting windshield wiper and washer switch connector. Turn ignition switch to ON. Turn windshield washer switch on. Measure voltage at terminal G at windshield wiper and washer switch connector of wiring harness. Is voltage **B+**? 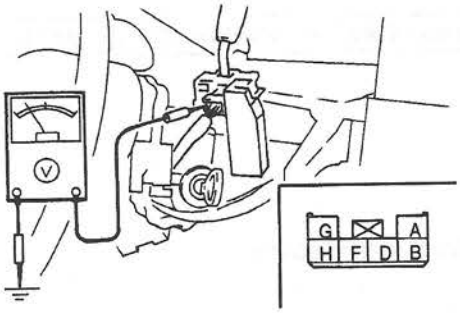 W6U901WQ3	Yes	Go to next step.
		No	Replace windshield wiper and washer switch.
2	Partially peel off right side mud guard. Turn windshield washer switch on. Measure voltage at terminal B at windshield washer motor connector of wiring harness. Is voltage **B+**? 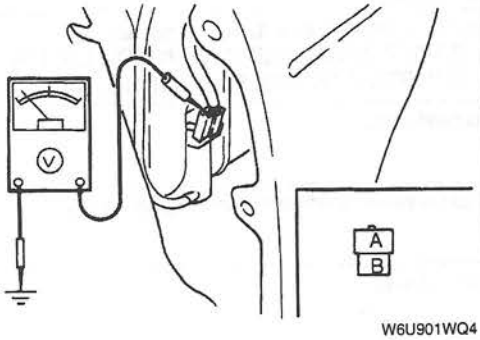 W6U901WQ4	Yes	Go to next step.
		No	Repair wiring harness between windshield wiper and washer switch and windshield washer motor.
3	Inspect windshield washer motor. ☞ 09–19 WINDSHIELD WASHER MOTOR INSPECTION Is windshield washer motor okay?	Yes	Repair wiring harness between windshield washer motor and ground.
		No	Replace windshield washer motor.

10	Washer operates with windshield washer switch turned to OFF		
TROUBLESHOOTING HINTS Malfunction in windshield wiper and washer switch input signal circuit ① Washer operates with windshield washer switch turned to OFF • Windshield wiper and washer switch malfunction			
STEP	**INSPECTION**		**ACTION**
—	Inspect windshield wiper and washer switch. ☞ 09–19 WINDSHIELD WIPER AND WASHER SWITCH INSPECTION Is windshield wiper and washer switch okay?	Yes	Repair wiring harness from windshield wiper and washer switch to windshield washer motor.
		No	Replace windshield wiper and washer switch.

11	Washer fluid-level warning light remains illuminated when washer fluid level is above LOW (Engine is running)		
TROUBLESHOOTING HINTS Malfunction in washer fluid-level sensor operation circuit ① Washer fluid-level warning light remains illuminated • Washer fluid-level sensor malfunction			
STEP	**INSPECTION**		**ACTION**
—	—	—	Replace washer fluid-level sensor.

12	Washer fluid-level warning light does not illuminate when washer fluid level is below LOW (Engine is running)		
TROUBLESHOOTING HINTS Malfunction in instrument cluster power supply circuit ① Washer fluid-level warning light does not illuminate • Instrument cluster malfunction Malfunction in instrument cluster input signal circuit ① Washer fluid-level warning light does not illuminate • Instrument cluster malfunction • Malfunction of wiring harness between instrument cluster and washer fluid-level sensor Malfunction in washer fluid-level sensor operation circuit ① Washer fluid-level warning light does not illuminate • Washer fluid-level sensor malfunction • Malfunction of wiring harness between washer fluid-level sensor and ground Malfunction in washer fluid-level warning light operation circuit ① Washer fluid-level warning light does not illuminate • Washer fluid-level warning light bulb malfunction			
STEP	**INSPECTION**		**ACTION**
1	Do other warning lights illuminate with ignition switch at ON? (Engine is stopped.)	Yes	Go to next step.
		No	Go to "All warning lights do not illuminate". ☞ 09–01P INSTRUMENTATION/DRIVER INFO. SYMPTOM TROUBLESHOOTING, No. 7
2	Remove and inspect washer fluid-level warning light bulb. ☞ 09–22 WARNING AND INDICATOR LIGHT BULB REMOVAL/INSTALLATION Is washer fluid-level warning light bulb okay?	Yes	Go to next step.
		No	Replace washer fluid-level warning light bulb.
3	Check for continuity between terminal 1K at instrument cluster connector of wiring harness and terminal A at washer fluid-level sensor connector of wiring harness. Is there continuity? 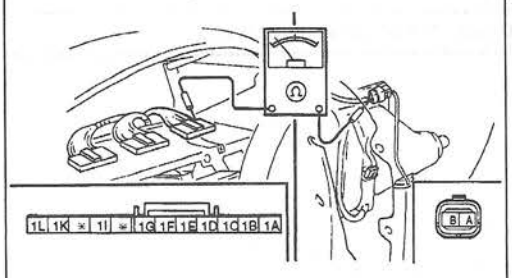 W6U901WQ5	Yes	Go to next step.
		No	Repair wiring harness between instrument cluster and washer fluid-level sensor.

STEP	INSPECTION		ACTION
4	Inspect washer fluid-level sensor. ☞ 09–19 WASHER FLUID-LEVEL SENSOR INSPECTION Is washer fluid-level sensor okay?	Yes	Go to next step.
		No	Replace washer fluid-level sensor.
5	Check for continuity between terminal B at washer fluid-level sensor connector of wiring harness and ground. Is there continuity? 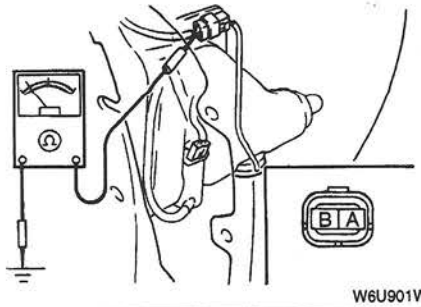 W6U901WQ6	Yes	Replace print plate No.1. ☞ 09–22 INSTRUMENT CLUSTER DISASSEMBLY/ASSEMBLY
		No	Repair wiring harness between washer fluid-level sensor and ground.

09–01N TROUBLESHOOTING [AUDIO]

FOREWORD 09–01N–1
AUDIO SYMPTOM TROUBLESHOOTING 09–01N–1
Diagnostic Index 09–01N–1
Symptom Troubleshooting 09–01N–1

FOREWORD

W6U901W61

- Refer to 00–00 GENERAL INFORMATION and thoroughly read and understand the basic flow of troubleshooting to properly perform the procedures.

AUDIO SYMPTOM TROUBLESHOOTING

W6U901W62

Diagnostic Index

- Use the chart below to verify the symptoms of the trouble in order to diagnose the appropriate area.

No.	Malfunction Symptom
1	No speakers operate in all cases (Radio and CD modes)
2	Some speakers do not operate in all cases (Radio and CD modes)
3	Poor sound quality only when radio is played
4	Poor sound quality only when CD is played
5	Poor sound quality of all speakers in all cases (Radio and CD modes)
6	Noise occurs
7	CD skips
8	CD cannot be loaded
9	CD cannot be unloaded
10	CD does not play
11	Power antenna does not operate

Symptom Troubleshooting

1	No speakers operate in all cases (Radio and CD modes)

TROUBLESHOOTING HINTS

Malfunction in audio unit power supply/ground circuit

① No speakers operate (Equipped without BOSE speaker)
- ROOM 15 A fuse malfunction
- RADIO 15 A fuse malfunction
- Audio unit malfunction
- Malfunction in wiring harness between ROOM 15 A fuse and audio unit
- Malfunction in wiring harness between RADIO 15 A fuse and audio unit
- Malfunction in wiring harness between audio unit and ground

① No speakers operate (Equipped with BOSE speaker)
- AUDIO 15 A fuse malfunction
- ROOM 15 A fuse malfunction
- RADIO 15 A fuse malfunction
- Audio amplifier malfunction
- Audio unit malfunction
- Malfunction in wiring harness between ROOM 15 A fuse and audio unit
- Malfunction in wiring harness between RADIO 15 A fuse and audio unit
- Malfunction in wiring harness between AUDIO 15 A fuse and audio amplifier
- Malfunction in wiring harness between audio unit and audio amplifier
- Malfunction in wiring harness between audio unit and ground
- Malfunction in wiring harness between audio amplifier and ground

STEP	INSPECTION		ACTION
1	Equipped without BOSE speaker: Are ROOM 15 A fuse and RADIO 15 A fuse okay? Equipped with BOSE speaker: Are ROOM 15 A fuse, RADIO 15 A fuse, and AUDIO 15 A fuse okay? 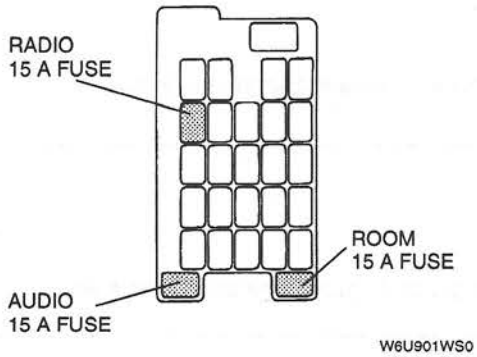 W6U901WS0	Yes	Go to next step.
		No	Replace fuse after repairing wiring harness.
2	With connector still connected, remove audio unit. ☞ 09–20 AUDIO UNIT REMOVAL Turn ignition switch to ACC. Measure voltage at terminal 1A at audio unit connector of wiring harness. Is voltage **B+**? 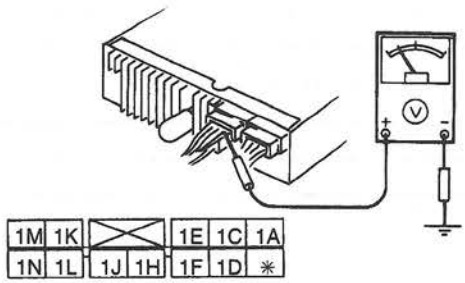 W6U901WS1	Yes	Go to next step.
		No	Repair wiring harness between RADIO 15 A fuse and audio unit.
3	Measure voltage at terminal 1C at audio unit connector of wiring harness. Is voltage **B+**? 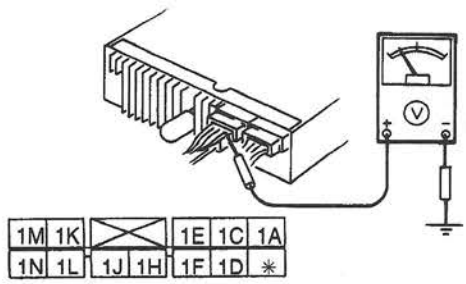 W6U901WS2	Yes	Go to next step.
		No	Repair wiring harness between ROOM 15 A fuse and audio unit.

STEP	INSPECTION		ACTION
4	Turn ignition switch to LOCK. Disconnect audio unit connector. Check for continuity between terminal 3A at audio unit connector of wiring harness and ground. Is there continuity? 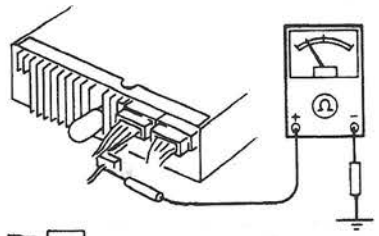 W6U901WST	Yes	Equipped without BOSE speaker: Replace audio unit. ☞ 09–20 AUDIO UNIT INSTALLATION Equipped with BOSE speaker: Go to next step.
		No	Repair wiring harness between audio unit and ground.
5	Connect audio unit connector. Turn ignition switch to ACC. Measure voltage at terminal 1J at audio unit connector of wiring harness. Is voltage **B+**? 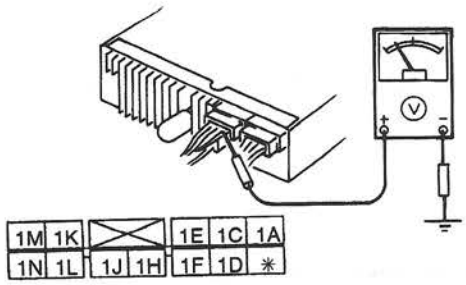 W6U901WSU	Yes	Go to next step.
		No	Replace audio unit. ☞ 09–20 AUDIO UNIT INSTALLATION
6	Remove passenger's side front seat. ☞ 09–13 FRONT SEAT REMOVAL/INSTALLATION Turn ignition switch to ACC. Measure voltage at terminal U at audio amplifier connector of wiring harness. Is voltage **B+**? 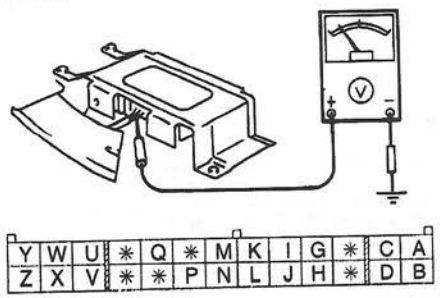 W6U901WS3	Yes	Go to next step.
		No	Repair wiring harness between AUDIO 15 A fuse and audio amplifier.

STEP	INSPECTION		ACTION
7	Measure voltage at terminal Q at audio amplifier connector of wiring harness. Is voltage **B+**? 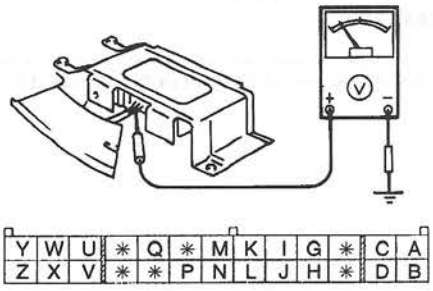 W6U901WS5	Yes	Go to next step.
		No	Repair wiring harness between audio unit and audio amplifier.
8	Turn ignition switch to LOCK. Disconnect audio amplifier connector. Check for continuity between terminal V at audio amplifier connector of wiring harness and ground. Is there continuity? 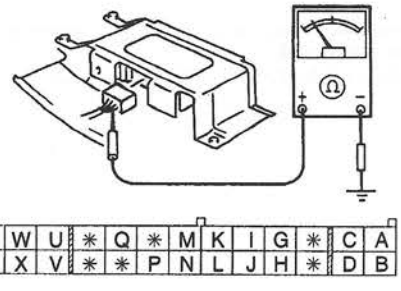 W6U901WS6	Yes	Replace audio amplifier. ☞ 09–20 AUDIO AMPLIFIER REMOVAL/INSTALLATION
		No	Repair wiring harness between audio amplifier and ground.

2	**Some speakers do not operate in all cases (Radio and CD modes)**

TROUBLESHOOTING HINTS

Malfunction in speaker operation signal circuit

① Some speakers do not operate (Equipped without BOSE speaker)
- Audio unit malfunction
- Speaker malfunction
- Malfunction in wiring harness between audio unit and speaker

① Some speakers do not operate (Equipped with BOSE speaker)
- Audio unit malfunction
- Speaker malfunction
- Audio amplifier malfunction
- Malfunction in wiring harness between audio unit and audio amplifier
- Malfunction in wiring harness between audio amplifier and speaker

STEP	INSPECTION		ACTION
1	Turn ignition switch to ACC. Play CD and set volume control knob to appropriate position. Determine speaker which does not operate turning bass/balance control knob and treble/fader control knob. Remove speaker which does not operate. ☞ 09–20 DOOR SPEAKER REMOVAL/INSTALLATION ☞ 09–20 REAR SPEAKER REMOVAL/INSTALLATION Inspect speaker. ☞ 09–20 DOOR SPEAKER INSPECTION ☞ 09–20 REAR SPEAKER INSPECTION Is speaker okay?	Yes	Equipped without BOSE speaker: Go to next step. Equipped with BOSE speaker: Go to step 3.
		No	Replace speaker. ☞ 09–20 DOOR SPEAKER REMOVAL/INSTALLATION ☞ 09–20 REAR SPEAKER REMOVAL/INSTALLATION

STEP	INSPECTION		ACTION
2	Remove audio unit. ☞ 09–20 AUDIO UNIT REMOVAL Check for continuity between following terminals of audio unit connector of wiring harness and speaker connector of wiring harness. Is there continuity? • 1M—B (Front right) • 1N—A (Front right) • 1K—B (Front left) • 1L—A (Front left) • 2F—B (Rear right) • 2H—A (Rear right) • 2A—B (Rear left) • 2B—A (Rear left) 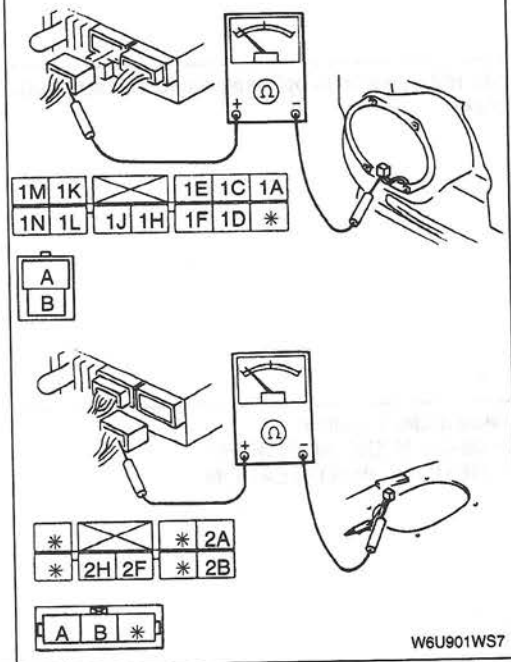 	Yes	Replace audio unit. ☞ 09–20 AUDIO UNIT INSTALLATION
		No	Repair wiring harness between audio unit and speaker.
3	With connector still connected, remove audio unit. ☞ 09–20 AUDIO UNIT REMOVAL Turn ignition switch to ACC. Audio power switch is on. Measure voltage at following terminals of audio unit connector of wiring harness. Is voltage **1 V or more**? • 1K • 1L • 1M • 1N • 2A • 2B • 2F • 2H 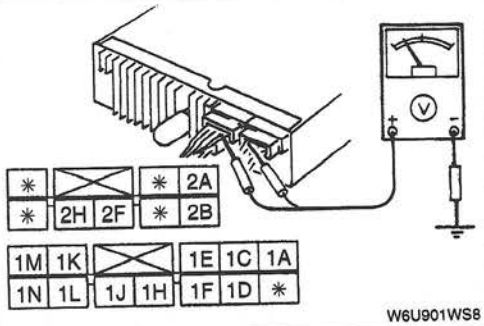 	Yes	Go to next step.
		No	Replace audio unit. ☞ 09–20 AUDIO UNIT INSTALLATION

STEP	INSPECTION		ACTION
4	Disconnect audio unit connector. Remove passenger's side front seat. ☞ 09–13 FRONT SEAT REMOVAL/INSTALLATION Disconnect audio amplifier connector. Check for continuity between following terminals of audio unit connector of wiring harness and audio amplifier connector of wiring harness. Is there continuity? • 1M—K • 1N—L • 1K—G • 1L—H • 2F—M • 2H—N • 2A—I • 2B—J 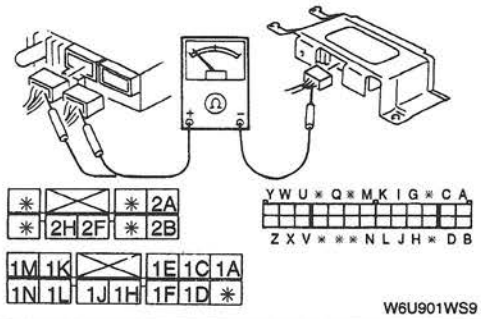 W6U901WS9	Yes	Go to next step.
		No	Repair wiring harness between audio unit and audio amplifier.
5	Check for continuity between following terminals of audio amplifier connector of wiring harness and speaker connector of wiring harness. Is there continuity? • K—B (Front right) • L—A (Front right) • G—B (Front left) • H—A (Front left) • M—B (Rear right) • N—A (Rear right) • I—B (Rear left) • J—A (Rear left) 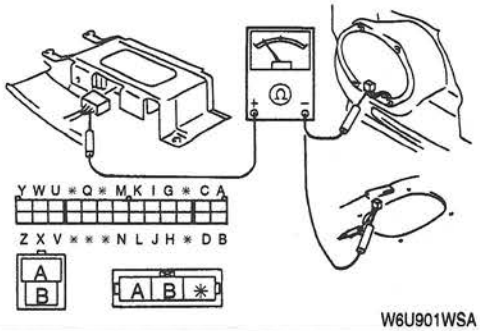 W6U901WSA	Yes	Replace audio amplifier. ☞ 09–20 AUDIO AMPLIFIER REMOVAL/INSTALLATION
		No	Repair wiring harness between audio amplifier and speaker.

3	Poor sound quality only when radio is played

TROUBLESHOOTING HINTS
Malfunction in audio unit input signal circuit
① Poor sound quality
- Malfunction in reception
- Audio unit malfunction
- Manual antenna malfunction
- Power antenna malfunction
- Front antenna feeder malfunction
- Rear antenna feeder malfunction
- Poor installation of manual antenna mast
- Poor installation of spacer

STEP	INSPECTION		ACTION
1	When radio wave was received at another position, is sound quality normal?	Yes	Troubleshooting completed. (Cause of malfunction is reception outside service area of radio station.)
		No	Go to next step.
2	Is manual antenna equipped?	Yes	Go to next step.
		No	Go to step 4.
3	Is manual antenna mast properly installed?	Yes	Go to next step.
		No	Reinstall manual antenna mast.
4	Is spacer properly installed? 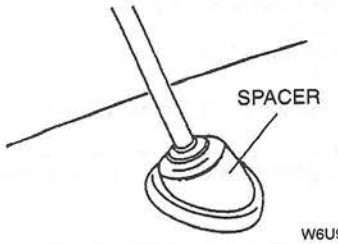 W6U901WSB	Yes	Go to next step.
		No	Reinstall spacer. ☞ 09–20 MANUAL ANTENNA REMOVAL/INSTALLATION ☞ 09–20 POWER ANTENNA REMOVAL/INSTALLATION
5	Equipped with manual antenna: Inspect manual antenna. ☞ 09–20 MANUAL ANTENNA INSPECTION Is manual antenna normal? Equipped with power antenna: Inspect power antenna. ☞ 09–20 POWER ANTENNA INSPECTION Is power antenna normal?	Yes	Go to next step.
		No	Equipped with manual antenna: Replace manual antenna. ☞ 09–20 MANUAL ANTENNA REMOVAL/INSTALLATION Equipped with power antenna: Replace power antenna. ☞ 09–20 POWER ANTENNA REMOVAL/INSTALLATION
6	Inspect front antenna feeder. ☞ 09–20 FRONT ANTENNA FEEDER INSPECTION Is front antenna feeder normal?	Yes	Go to next step.
		No	Replace front antenna feeder. ☞ 09–20 FRONT ANTENNA FEEDER REMOVAL/INSTALLATION
7	Inspect rear antenna feeder. ☞ 09–20 REAR ANTENNA FEEDER INSPECTION Is rear antenna feeder normal?	Yes	Replace audio unit. ☞ 09–20 AUDIO UNIT INSTALLATION
		No	Replace rear antenna feeder. ☞ 09–20 REAR ANTENNA FEEDER REMOVAL/INSTALLATION

4	Poor sound quality only when CD is played

TROUBLESHOOTING HINTS
Malfunction in output signal system of software
① Poor sound quality
- CD malfunction

Malfunction in audio unit operation signal circuit
① Poor sound quality
- Audio unit malfunction

STEP	INSPECTION		ACTION
—	Is CD defective?	Yes	Replace with known good CD.
		No	Replace audio unit. ☞ 09–20 AUDIO UNIT REMOVAL ☞ 09–20 AUDIO UNIT INSTALLATION

5	Poor sound quality in all cases (Radio and CD modes)

TROUBLESHOOTING HINTS

Malfunction in audio unit output signal/ground circuit

① Poor sound quality (Equipped without BOSE speaker)
- Audio unit malfunction
- Speaker malfunction
- Malfunction in wiring harness between audio unit and ground

① Poor sound quality (Equipped with BOSE speaker)
- Audio unit malfunction
- Audio amplifier malfunction
- Speaker malfunction
- Malfunction in wiring harness between audio unit and ground
- Malfunction in wiring harness between audio amplifier and ground

STEP	INSPECTION		ACTION
1	Are all speakers poor in sound quality?	Yes	Go to next step.
		No	Go to step 4.
2	Remove audio unit. ☞ 09–20 AUDIO UNIT REMOVAL Check for continuity between terminal 3A at audio unit connector of wiring harness and ground. Is there continuity? 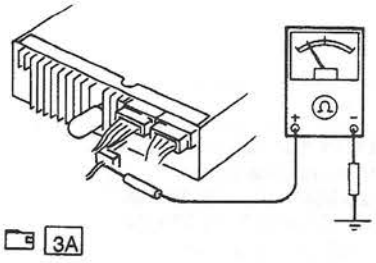 W6U901WSD	Yes	Equipped with BOSE speaker: Go to next step. Equipped without BOSE speaker: Replace audio unit. ☞ 09–20 AUDIO UNIT INSTALLATION
		No	Repair wiring harness between audio unit and ground.
3	Remove passenger's side front seat. ☞ 09–13 FRONT SEAT REMOVAL/INSTALLATION Disconnect audio amplifier connector. Check for continuity between terminal V at audio amplifier connector of wiring harness and ground. Is there continuity? 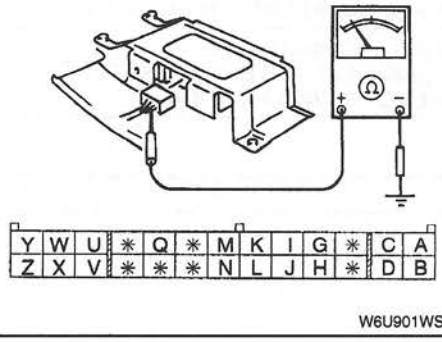 W6U901WSV	Yes	Replace audio unit or audio amplifier. ☞ 09–20 AUDIO UNIT REMOVAL ☞ 09–20 AUDIO UNIT INSTALLATION ☞ 09–20 AUDIO AMPLIFIER REMOVAL/INSTALLATION
		No	Repair wiring harness between audio amplifier and ground.

STEP	INSPECTION		ACTION
4	Inspect speaker with poor sound quality. ☞ 09–20 DOOR SPEAKER INSPECTION ☞ 09–20 REAR SPEAKER INSPECTION Is speaker okay?	Yes	Equipped with BOSE speaker: Replace audio unit or audio amplifier. ☞ 09–20 AUDIO UNIT REMOVAL ☞ 09–20 AUDIO UNIT INSTALLATION ☞ 09–20 AUDIO AMPLIFIER REMOVAL/INSTALLATION Equipped without BOSE speakser: Replace audio unit. ☞ 09–20 AUDIO UNIT REMOVAL ☞ 09–20 AUDIO UNIT INSTALLATION
		No	Replace speaker. ☞ 09–20 DOOR SPEAKER REMOVAL/INSTALLATION ☞ 09–20 REAR SPEAKER REMOVAL/INSTALLATION

6 Noise occurs

TROUBLESHOOTING HINTS

Malfunction in audio unit operation signal circuit

① Noise occurs
- Malfunction in front antenna feeder location
- Audio unit malfunction
- Malfunction in wiring harness between audio unit and speaker

Influence of ambient noise

① Noise occurs
- Fading (AM radio)
- Fast fading (FM radio)

Influence of vehicle-induced noise

① Noise occurs
- Fuel pump noise
- Ignition noise
- Generator noise
- Windshield wiper motor noise
- Windshield washer motor noise
- Power window regulator noise
- Cooling fan motor noise
- Condenser fan motor noise
- Brake switch noise
- Turn signal light noise
- Horn noise
- Blower motor noise

STEP	INSPECTION		ACTION
1	Does noise occur in all cases?	Yes	Go to next step.
		No	Go to step 4.
2	Is terminal 3A at audio unit connector of wiring harness securely connected?	Yes	Go to next step.
		No	Reconnect connector properly.
3	Determine cause of noise referring to vehicle-induced noise diagnostic chart. Remove part which causes noise. Is noise suppresser or noise-preventive capacitor installed near electrical system which emits noise current?	Yes	Repair wiring harness between parts which causes noise and ground.
		No	Install noise suppresser or noise-preventive capacitor.
4	Does noise occur only when radio played?	Yes	Go to next step.
		No	Go to malfunction symptom No.4.
5	When radio wave was received at another position, did noise disappear?	Yes	Troubleshooting completed. (Cause of malfunction is reception outside service area of radio station.)
		No	Go to next step.

STEP	INSPECTION		ACTION
6	Is spacer properly installed? 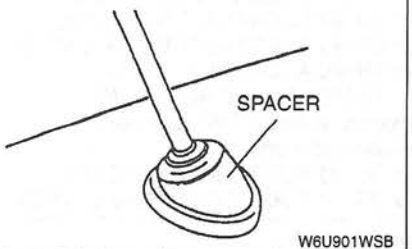	Yes	Go to next step.
		No	Reinstall spacer. ☞ 09–20 MANUAL ANTENNA REMOVAL/INSTALLATION ☞ 09–20 POWER ANTENNA REMOVAL/INSTALLATION
7	With front antenna feeder still connected, remove audio unit. ☞ 09–20 AUDIO UNIT REMOVAL Is front antenna feeder secured away from other wiring harness?	Yes	Go to malfunction symptom No.3.
		No	Secure audio unit antenna feeder away from other wiring harness.

Vehicle-induced noise diagnostic chart

Name of noise		Condition
Noise when engine is started	Fuel pump noise	Noise occurs immediately after ignition switch is turned to ON
	Ignition noise	Consecutive noise Tone changes when acceleration pedal is depressed
	Generator noise	Whizzing noise occurs when acceleration pedal is depressed
Noise when electrical parts are operated	Windshield wiper motor noise	Howling noise occurs synchronized with windshield wiper operation
	Windshield washer motor noise	Noise occurs when windshield washer is operated
	Power window regulator noise	Noise occurs when power window is operated
	Cooling fan motor noise	Noise occurs when cooling fan is operated
	Brake switch noise	Noise occurs at beginning or end of brake operation
	Turn signal light noise	Clicking noise occurs synchronized with turn signal light flash
	Horn switch noise	Noise occurs when horn switch is depressed
	Blower motor noise	Howling noise occurs when heater or air conditioner is operated
	Condenser fan motor noise	Howling noise occurs when air conditioner is operated

7	CD skips

TROUBLESHOOTING HINTS

Malfunction in audio unit installation
① CD skips
- Improper installation of audio unit

Malfunction in audio unit operation signal circuit
① CD skips
- Audio unit malfunction

Malfunction in output signal system of software
① CD skips
- CD malfunction

Influence of shock
① CD skips
- Malfunction by shock

STEP	INSPECTION		ACTION
1	Is audio unit shocked strongly?	Yes	Reduce shocks.
		No	Go to next step.
2	Is CD clean?	Yes	Go to next step.
		No	Replace CD wiped clean.
3	Is CD damaged?	Yes	Replace with good CD.
		No	Go to next step.

STEP	INSPECTION		ACTION
4	Is audio unit installed properly?	Yes	Replace audio unit. ☞ 09–20 AUDIO UNIT REMOVAL ☞ 09–20 AUDIO UNIT INSTALLATION
		No	Reinstall audio unit properly.

8 CD cannot be loaded

TROUBLESHOOTING HINTS
Malfunction in output signal system of software
① CD cannot be loaded
- CD malfunction

Malfunction in audio unit operation signal circuit
① CD cannot be loaded
- Audio unit malfunction

Influence of foreign materials
① CD cannot be loaded
- Audio unit malfunction by foreign materials

STEP	INSPECTION		ACTION
—	Is CD warped?	Yes	Replace with good CD.
		No	Replace audio unit. ☞ 09–20 AUDIO UNIT REMOVAL ☞ 09–20 AUDIO UNIT INSTALLATION

9 CD cannot be unloaded

TROUBLESHOOTING HINTS
Malfunction in audio unit power supply circuit
① CD cannot be unloaded
- Audio unit malfunction

STEP	INSPECTION		ACTION
—	Is CD loaded properly?	Yes	Go to malfunction symptom No.10.
		No	Replace audio unit. ☞ 09–20 AUDIO UNIT REMOVAL ☞ 09–20 AUDIO UNIT INSTALLATION

10 CD does not play

TROUBLESHOOTING HINTS
Malfunction in output signal system of software
① CD does not play
- CD malfunction

Malfunction in audio unit operation signal circuit
① CD does not play
- Audio unit malfunction

STEP	INSPECTION		ACTION
1	Turn ignition switch to ACC. Verify that power switch is on. Does radio operate?	Yes	Go to next step.
		No	Go to malfunction symptom No.1.
2	Is CD good?	Yes	Go to next step.
		No	Use known good CD.
3	CD is played at interval of **1 hour.** Does CD play?	Yes	Troubleshooting completed. (Cause of malfunction is fogged optical lens.)
		No	Replace audio unit. ☞ 09–20 AUDIO UNIT REMOVAL ☞ 09–20 AUDIO UNIT INSTALLATION

11	Power antenna does not operate

TROUBLESHOOTING HINTS

Malfunction in audio unit operation signal circuit

① Power antenna does not operate
- Audio unit malfunction
- Malfunction in wiring harness between audio unit and power antenna

Malfunction in power antenna operation signal circuit

① Power antenna does not operate
- Power antenna malfunction
- Malfunction in wiring harness between ROOM 15 A fuse and power antenna
- Malfunction in wiring harness between audio unit and power antenna
- Malfunction in wiring harness between power antenna and ground

STEP	INSPECTION		ACTION
1	Turn ignition switch to ACC. Verify that power switch is on. Turn over trunk compartment covering from passenger's side. ☞ 09–17 TRUNK COMPARTMENT COVERING REMOVAL/INSTALLATION Measure voltage at terminal B at power antenna connector of wiring harness. Is voltage **B+**? 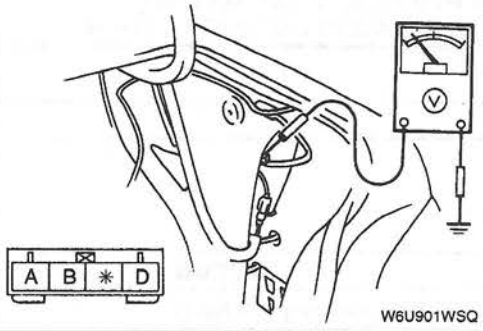	Yes	Go to next step.
		No	Repair wiring harness between ROOM 15 A fuse and power antenna.
2	Measure voltage at terminal A at power antenna connector of wiring harness. Is voltage **B+**? 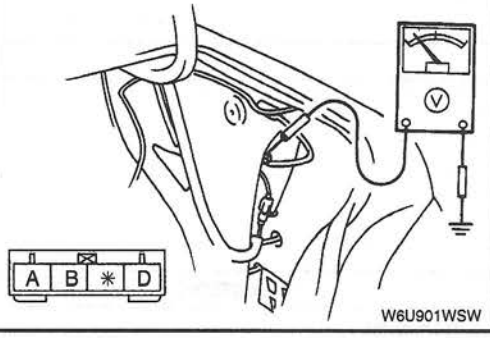	Yes	Go to next step.
		No	Go to step 4.

STEP	INSPECTION		ACTION
3	Turn ignition switch to LOCK. Disconnect power antenna connector. Check for continuity between terminal D at power antenna connector of wiring harness and ground. Is there continuity? 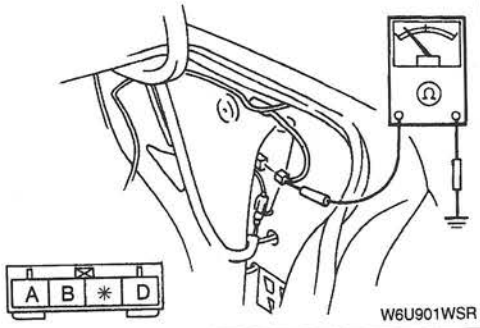	Yes	Replace power antenna. ☞ 09–20 POWER ANTENNA REMOVAL/INSTALLATION
		No	Repair wiring harness between power antenna and ground.
4	With connector still connected, remove audio unit. ☞ 09–20 AUDIO UNIT REMOVAL Turn ignition switch to ACC. Verify that power switch is on. Measure voltage at terminal 1D at audio unit connector of wiring harness. Is voltage **B+**? 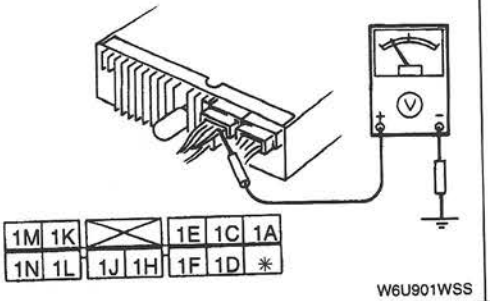	Yes	Repair wiring harness between audio unit and power antenna.
		No	Replace audio unit. ☞ 09–20 AUDIO UNIT INSTALLATION

09–01P TROUBLESHOOTING [INSTRUMENTATION/DRIVER INFO.]

FOREWORD **09–01P–1**
INSTRUMENTATION/DRIVER INFO. SYMPTOM TROUBLESHOOTING **09–01P–1**
Diagnostic Index **09–01P–1**
Symptom Troubleshooting **09–01P–2**

FOREWORD

W6U901W66

- Refer to 00–00 GENERAL INFORMATION and thoroughly read understand the basic flow of troubleshooting to properly perform the procedures.

INSTRUMENTATION/DRIVER INFO. SYMPTOM TROUBLESHOOTING

W6U901W67

Diagnostic Index

- Use the chart below to verify that the symptoms of the concern in order to diagnose the appropriate area.

No.	Symptom
1	All meters and gauges (speedometer, tachometer, fuel gauge, water temperature gauge) do not operate
2	Speedometer does not operate
3	Speedometer needle fluctuates or is incorrect
4	Tachometer does not operate
5	Tachometer needle fluctuates or is incorrect
6	Fuel gauge does not operate or is incorrect
7	Water temperature gauge does not operate or is incorrect
8	All warning lights do not illuminate with ignition switch at ON (engine stopped)
9	Generator warning light does not illuminate with ignition switch at ON (engine running)
10	Brake system warning light does not illuminate with parking brake lever set
11	Oil pressure warning light does not illuminate with ignition switch at ON (engine stopped)
12	Fuel-level warning light remains illuminated (engine running)
13	Fuel-level warning light does not illuminate with fuel tank almost empty (engine running)
14	Oil pressure warning light remains illuminated (engine running)
15	Door ajar warning light does not illuminate with any door open
16	Door ajar warning light remains illuminated with all doors closed
17	Brake system warning light remains illuminated with parking brake released and brake fluid level above MIN
18	Brake system warning light does not illuminate with brake fluid in reservoir below MIN
19	Even if ignition key is left in steering lock, key reminder warning buzzer does not sound when any door is opened
20	Even if ignition key is removed from steering lock, key reminder warning buzzer will sound when any door is opened

Symptom Troubleshooting

1	All meters and gauges (speedometer, tachometer, fuel gauge, water temperature gauge) do not operate

TROUBLESHOOTING HINTS
Malfunction in instrument cluster power supply/ground circuit
① All meters and gauges do not operate
- METER 10 A fuse malfunction
- ROOM 15 A fuse malfunction
- Print plate malfunction
- Display unit assembly malfunction
- Malfunction in wiring harness between METER 10 A fuse and instrument cluster
- Malfunction in wiring harness between ROOM 15 A fuse and instrument cluster
- Malfunction in wiring harness between instrument cluster and ground

STEP	INSPECTION		ACTION
1	Is METER 10 A fuse okay? 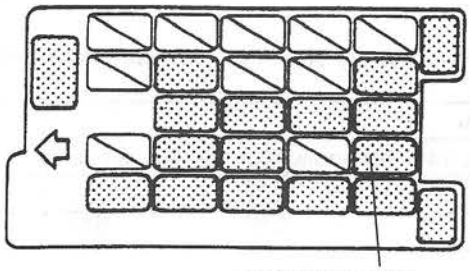 W6U901WU0	Yes	Go to next step.
		No	Replace fuse after repairing wiring harness.
2	Is ROOM 15 A fuse okay? 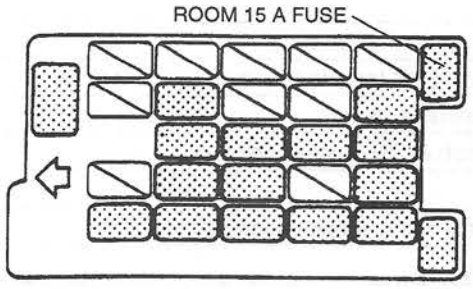 W6U901WU1	Yes	Go to next step.
		No	Replace fuse after repairing wiring harness.
3	Remove meter hood. Remove instrument cluster. Measure voltage at terminal 2K at instrument cluster (14-pin) connector of wiring harness. Is voltage **B+**? 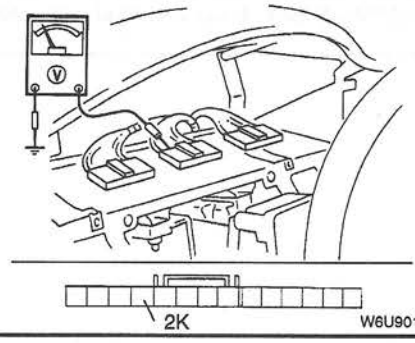 W6U901WU2	Yes	Go to next step.
		No	Repair wiring harness between ROOM 15 A fuse and instrument cluster.

STEP	INSPECTION		ACTION
4	Turn ignition switch to ON. Measure voltage at terminal 3N at instrument cluster (14-pin) connector of wiring harness. Is voltage **B+**? 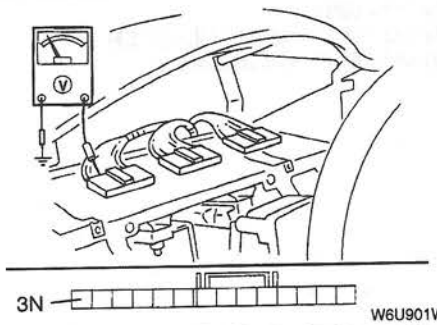	Yes	Go to next step.
		No	Repair wiring harness between METER 10 A fuse and instrument cluster.
5	Turn ignition switch to LOCK. Check for continuity between terminal 2B at instrument cluster (14-pin) connector of wiring harness and ground. Is there continuity? 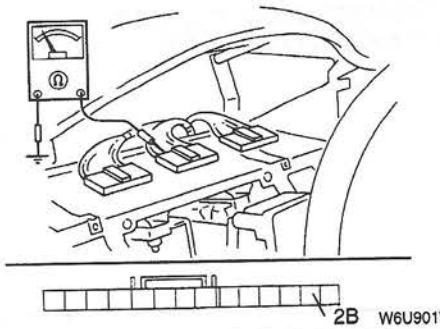	Yes	Go to next step.
		No	Repair wiring harness between instrument cluster and ground.
6	Disconnect print plate connector. Check for continuity between terminal 2K (14-pin) at print plate and print plate connector 4B (8-pin) terminal. Is there continuity? 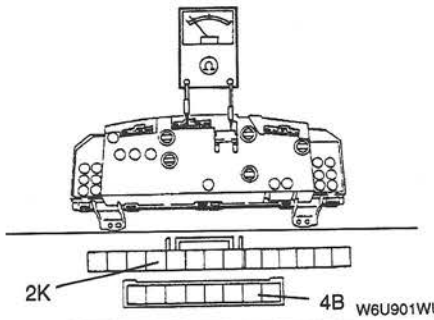	Yes	Go to next step.
		No	Replace print plate. ☞ 09–22 INSTRUMENT CLUSTER DISASSEMBLY/ASSEMBLY

STEP	INSPECTION		ACTION
7	Check for continuity between terminal 3N (14-pin) at print plate and print plate connector 4A (8-pin) terminal. Is there continuity? 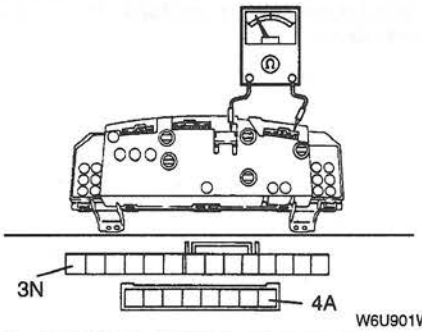 W6U901WU6	Yes	Go to next step.
		No	Replace print plate. ☞ 09–22 INSTRUMENT CLUSTER DISASSEMBLY/ASSEMBLY
8	Check for continuity between terminal 2B (14-pin) at print plate and print plate connector 4H (8-pin) terminal. Is there continuity? 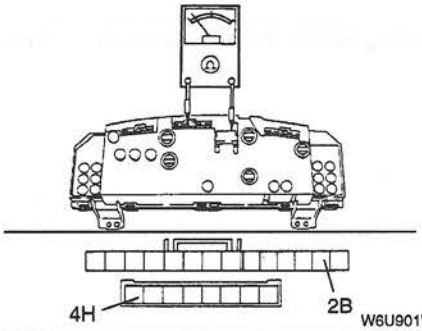 W6U901WU7	Yes	Replace display unit assembly. ☞ 09–22 INSTRUMENT CLUSTER DISASSEMBLY/ASSEMBLY
		No	Replace print plate. ☞ 09–22 INSTRUMENT CLUSTER DISASSEMBLY/ASSEMBLY

2	Speedometer does not operate

TROUBLESHOOTING HINTS

Malfunction in speedometer input signal circuit

① Speedometer does not operate
- Vehicle speedometer sensor malfunction
- Print plate malfunction
- Display unit assembly malfunction
- Malfunction in wiring harness between instrument cluster and vehicle speedometer sensor

Malfunction in speedometer operation circuit

① Speedometer does not operate
- Display unit assembly malfunction

STEP	INSPECTION		ACTION
1	Turn ignition switch to LOCK. Disconnect negative battery cable. After **30 seconds or more**, reconnect negative battery cable. Turn ignition switch to ON and LOCK **3 times**. Turn ignition switch to ON. Push odometer/tripmeter switch **3 times**.  W6U901WU8 Select DTC 12 by pushing odometer/tripmeter switch. Does speedometer needle move full scale and then indicate **60 mph**?	Yes	Go to next step.
		No	Replace display unit assembly. ☞ 09–22 INSTRUMENT CLUSTER DISASSEMBLY/ASSEMBLY
2	Select DTC 10 by pushing odometer/tripmeter switch. Start engine and drive vehicle. Does LCD indicate "ON"?	Yes	Replace display unit assembly. ☞ 09–22 INSTRUMENT CLUSTER DISASSEMBLY/ASSEMBLY
		No	Go to next step.
3	Remove meter hood. Remove instrument cluster. Measure voltage between terminal 2C (14-pin) and 2D (14-pin) of instrument cluster connector of wiring harness while rotating the front wheels slowly. Is voltage **5 V**? 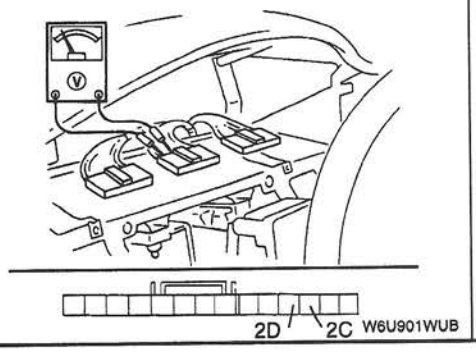 2D 2C W6U901WUB	Yes	Go to step 5.
		No	Go to next step.

STEP	INSPECTION		ACTION
4	Remove vehicle speedometer sensor. Inspect vehicle speedometer sensor. ☞ 05–17A VEHICLE SPEEDOMETER SENSOR INSPECTION [LA4A-EL] ☞ 05–17B VEHICLE SPEEDOMETER SENSOR INSPECTION [GF4A-EL] Is vehicle speedometer sensor okay?	Yes	Repair wiring harness between instrument cluster and vehicle speedometer sensor.
		No	Replace vehicle speedometer sensor.
5	Disconnector print plate connector. Check for continuity between terminal 2D (14-pin) at print plate and print plate connector 4G (8-pin) terminal. Is there continuity? 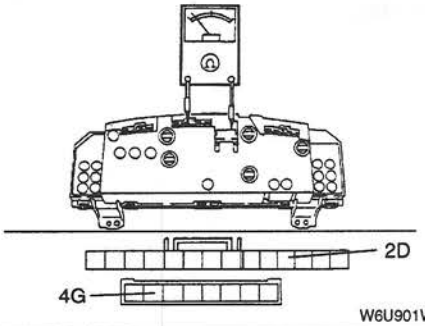 W6U901WUC	Yes	Go to next step.
		No	Replace print plate. ☞ 09–22 INSTRUMENT CLUSTER DISASSEMBLY/ASSEMBLY
6	Check for continuity between terminal 2B (14-pin) at print plate and print plate connector 2C (14-pin) terminal. Is there continuity? 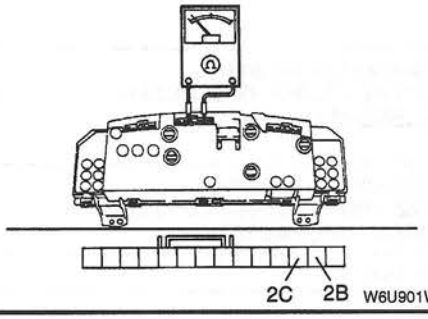 W6U901WUD	Yes	Replace display unit assembly. ☞ 09–22 INSTRUMENT CLUSTER DISASSEMBLY/ASSEMBLY
		No	Replace print plate. ☞ 09–22 INSTRUMENT CLUSTER DISASSEMBLY/ASSEMBLY

3	Speedometer needle fluctuates or is incorrect

TROUBLESHOOTING HINTS
Malfunction in speedometer input signal circuit
① Speedometer needle fluctuates or is incorrect
- Vehicle speedometer sensor malfunction
- Display unit assembly malfunction

Malfunction in speedometer operation signal
① Speedometer needle fluctuates or is incorrect
- Display unit assembly malfunction

STEP	INSPECTION		ACTION
1	Turn ignition switch to LOCK. Disconnect negative battery cable. After **30 seconds or more**, reconnect negative battery cable. Turn ignition switch to ON and LOCK **3 times**. Turn ignition switch to ON. Push odometer/tripmeter switch **3 times**. 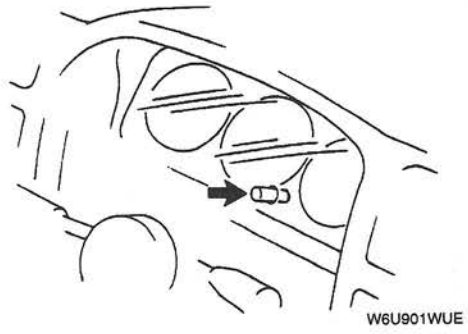 W6U901WUE Select DTC 12 by pushing odometer/tripmeter switch. Does speedometer needle move full scale and then indicate **60 mph**?	Yes	Replace vehicle speedometer sensor.
		No	Replace display unit assembly. ☞ 09–22 INSTRUMENT CLUSTER DISASSEMBLY/ASSEMBLY

4	Tachometer does not operate

TROUBLESHOOTING HINTS

Malfunction in tachometer input signal circuit

① Tachometer do not operate
- PCM malfunction
- Crank shaft position sensor malfunction
- Print plate malfunction
- Display unit assembly malfunction
- Malfunction in wiring harness between instrument cluster and PCM

Malfunction in tachometer operation circuit

① Tachometer do not operate
- Display unit assembly malfunction

STEP	INSPECTION		ACTION
1	Turn ignition switch to LOCK. Disconnect negative battery cable. After **30 seconds or more**, reconnect negative battery cable. Turn ignition switch to ON and LOCK **3 times**. Turn ignition switch to ON. Push odometer/tripmeter switch **3 times**. 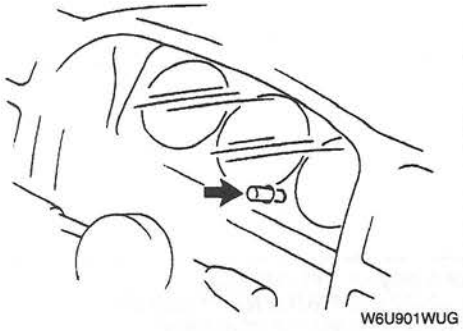 W6U901WUG Select DTC 13 by pushing odometer/tripmeter switch. Does tachometer needle move full scale and then indicate **3000 rpm**?	Yes	Go to next step.
		No	Replace display unit assembly. ☞ 09–22 INSTRUMENT CLUSTER DISASSEMBLY/ASSEMBLY
2	Select DTC 11 by pushing odometer/tripmeter switch. Start engine. Does LCD indicate "ON"?	Yes	Replace display unit assembly. ☞ 09–22 INSTRUMENT CLUSTER DISASSEMBLY/ASSEMBLY
		No	Go to next step.
3	Remove meter hood. Remove instrument cluster. Turn ignition switch to ON. Measure voltage at terminal 2I at instrument cluster (14-pin) connector of wiring harness. Is voltage **B+**? 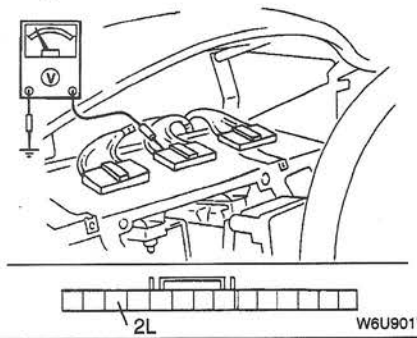 2L W6U901WUJ	Yes	Go to next step.
		No	Go to step 5.

STEP	INSPECTION		ACTION
4	Disconnect print plate connector. Check for continuity between terminal 2I (14-pin) at print plate and print plate connector 4C (8-pin) terminal. Is there continuity? 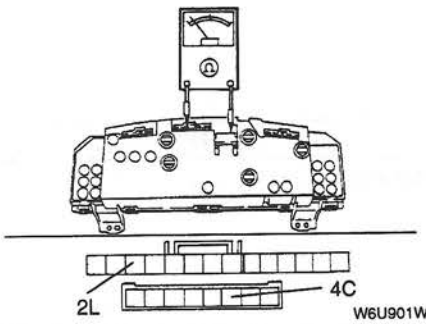 W6U901WUK	Yes	Replace display unit assembly. ☞ 09–22 INSTRUMENT CLUSTER DISASSEMBLY/ASSEMBLY
		No	Replace print plate. ☞ 09–22 INSTRUMENT CLUSTER DISASSEMBLY/ASSEMBLY
5	Remove rear console. Set **SST** to PCM. Measure voltage at terminal 48 of PCM when ignition switch ON. Is voltage above **10 V**? 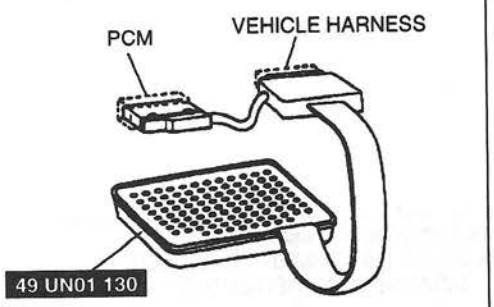 W6U901WUL	Yes	Repair wiring harness between instrument cluster and PCM.
		No	Go to next step.
6	Carry out OBD (On-Board Diagnostic) test. ☞ 01–01A ENGINE ON-BOARD DIAGNOSIS [FS] ☞ 01–01B ENGINE ON-BOARD DIAGNOSIS [KL] Is DTC P0320 outputed?	Yes	Perform diagnostic trouble code troubleshooting. ☞ 01–01A ENGINE ON-BOARD DIAGNOSIS [FS] ☞ 01–01B ENGINE ON-BOARD DIAGNOSIS [KL]
		No	Replace display unit assembly. ☞ 09–22 INSTRUMENT CLUSTER DISASSEMBLY/ASSEMBLY

5	Tachometer needle fluctuates or is incorrect		
TROUBLESHOOTING HINTS Malfunction in tachometer input signal circuit ① Tachometer needle fluctuates or is incorrect • PCM malfunction • Crank shaft position sensor • Display unit assembly malfunction Malfunction in tachometer operation circuit ① Tachometer needle fluctuates or is incorrect • Display unit assembly malfunction			
STEP	**INSPECTION**		**ACTION**
1	Turn ignition switch to LOCK. Disconnect negative battery cable. After **30 seconds or more**, reconnect negative battery cable. Turn ignition switch to ON and LOCK **3 times**. Turn ignition switch to ON. Push odometer/tripmeter switch **3 times**.  W6U901WUM Select DTC 13 by pushing odometer/tripmeter switch. Does tachometer needle move full scale and then indicate **3000 rpm**?	Yes	Go to next step.
		No	Replace display unit assembly. ☞ 09–22 INSTRUMENT CLUSTER DISASSEMBLY/ASSEMBLY
2	Carry out OBD (On-Board Diagnostic) test. ☞ 01–01A ENGINE ON-BOARD DIAGNOSIS [FS] ☞ 01–01B ENGINE ON-BOARD DIAGNOSIS [KL] Is DTC P0320 outputed?	Yes	Perform diagnostic trouble code troubleshooting. ☞ 01–01A ENGINE ON-BOARD DIAGNOSIS [FS] ☞ 01–01B ENGINE ON-BOARD DIAGNOSIS [KL]
		No	Replace display unit assembly. ☞ 09–22 INSTRUMENT CLUSTER DISASSEMBLY/ASSEMBLY

6	Fuel gauge does not operate or is incorrect

TROUBLESHOOTING HINTS

Malfunction in fuel gauge input signal circuit

① Fuel gauge do not operate or is incorrect
- Fuel gauge sender unit malfunction
- Print plate malfunction
- Display unit assembly malfunction
- Malfunction in wiring harness between instrument cluster and fuel gauge sender unit
- Malfunction in wiring harness between fuel gauge sender unit and ground

Malfunction in fuel gauge operation circuit

① Fuel gauge do not operate or is incorrect
- Display unit assembly malfunction

STEP	INSPECTION		ACTION
1	Turn ignition switch to LOCK. Disconnect negative battery cable. After **30 seconds or more**, reconnect negative battery cable. Turn ignition switch to ON and LOCK **3 times**. Turn ignition switch to ON. Push odometer/tripmeter switch **3 times**.  W6U901WUP Select DTC 23 by pushing odometer/tripmeter switch. Does fuel gauge needle indicate repeatedly point **F, 1/2, E**?	Yes	Go to next step.
		No	Replace display unit assembly. ☞ 09–22 INSTRUMENT CLUSTER DISASSEMBLY/ASSEMBLY
2	Select DTC 22 by pushing odometer/tripmeter switch. Does LCD indicate **"000" or "255"**?	Yes	Go to next step.
		No	Go to step 6.
3	Remove meter hood. Remove instrument cluster. Disconnect fuel pump connector. Check for continuity between terminal 2E at instrument cluster (14-pin) connector of wiring harness and ground. Is there continuity? 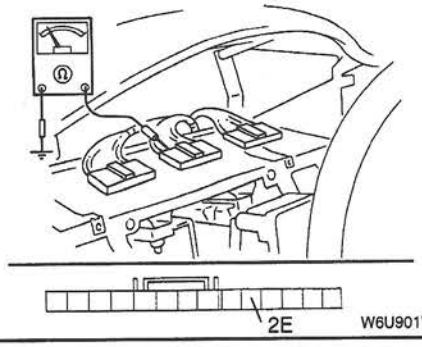 2E W6U901WUR	Yes	Repair wiring harness between instrument cluster and fuel gauge sender unit.
		No	Go to next step.

STEP	INSPECTION		ACTION
4	Check for continuity between terminal C at fuel pump connector of wiring harness and ground. Is there continuity? 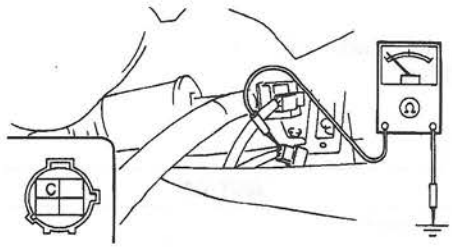 W6U901WUS	Yes	Go to next step.
		No	Repair wiring harness between fuel gauge sender unit and ground.
5	Disconnect print plate connector. Check for continuity between terminal 2E (14-pin) at print plate and print plate connector 4F (8-pin) terminal. Is there continuity? 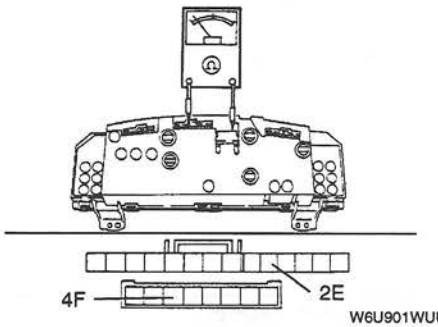 W6U901WUU	Yes	Go to next step.
		No	Replace print plate. ☞ 09–22 INSTRUMENT CLUSTER DISASSEMBLY/ASSEMBLY
6	Remove fuel gauge sender unit. Inspect fuel gauge sender unit. ☞ 09–22 FUEL GAUGE SENDER UNIT INSPECTION Is fuel gauge sender unit okay?	Yes	Replace display unit assembly. ☞ 09–22 INSTRUMENT CLUSTER DISASSEMBLY/ASSEMBLY
		No	Replace fuel gauge sender unit.

7	Water temperature gauge does not operate or is incorrect

TROUBLESHOOTING HINTS

Malfunction in water temperature gauge input signal circuit

① Water temperature gauge does not operate or is incorrect
- Water temperature sender unit malfunction
- Print plate malfunction
- Display unit assembly malfunction
- Malfunction in wiring harness between instrument cluster and water temperature sender unit

Malfunction in water temperature gauge operation circuit

① Water temperature gauge does not operate or is incorrect
- Display unit assembly malfunction

STEP	INSPECTION		ACTION
1	Turn ignition switch to LOCK. Disconnect negative battery cable. After **30 seconds or more**, reconnect negative battery cable. Turn ignition switch to ON and LOCK **3 times**. Turn ignition switch to ON. Push odometer/tripmeter switch **3 times**. 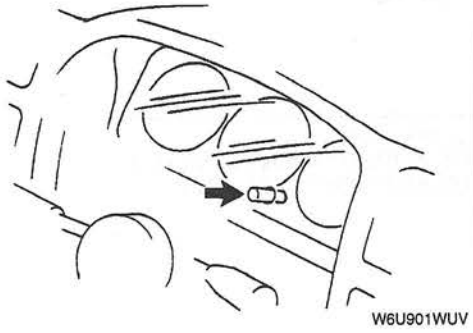 W6U901WUV Select DTC 25 by pushing odometer/tripmeter switch Does water temperature gauge needle indicate repeatedly **H, neutral, C**?	Yes	Go to next step.
		No	Replace display unit assembly. ☞ 09–22 INSTRUMENT CLUSTER DISASSEMBLY/ASSEMBLY
2	Select DTC 24 by pushing odometer/tripmeter switch. Does LCD indicate **"000" or "255"**?	Yes	Go to next step.
		No	Go to step 6.
3	Remove meter hood. Remove instrument cluster. Disconnect water temperature sender unit connector. Check for continuity between terminal 2H at instrument cluster (14-pin) connector of wiring harness and ground. Is there continuity? 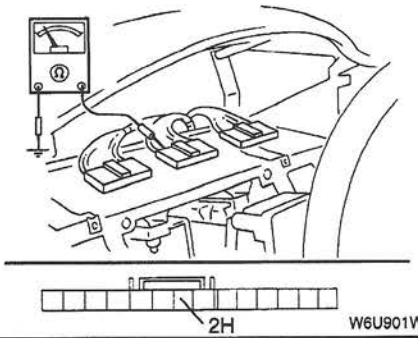 2H W6U901WUY	Yes	Repair wiring harness between instrument cluster and water temperature sender unit.
		No	Go to next step.

STEP	INSPECTION		ACTION
4	Connect water temperature sender unit connector. Check for continuity between terminal 2H at instrument cluster (14-pin) connector of wiring harness and ground. Is there continuity? 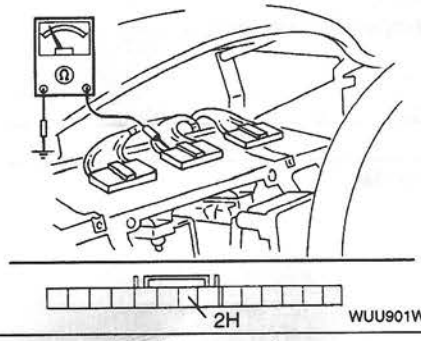 	Yes	Go to next step.
		No	Go to step 6.
5	Disconnect print plate connector. Check for continuity between terminal 2H (14-pin) at print plate and print plate connector 4D (8-pin) terminal. Is there continuity? 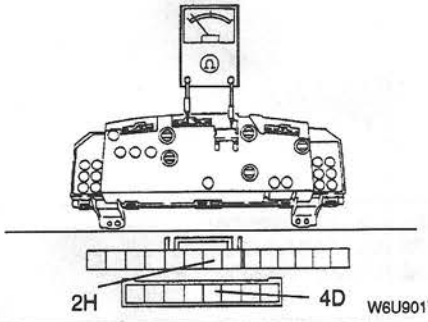 	Yes	Go to next step.
		No	Replace print plate. ☞ 09–22 INSTRUMENT CLUSTER DISASSEMBLY/ASSEMBLY
6	Remove water temperature sender unit. Inspect water temperature sender unit. ☞ 09–22 WATER TEMPERATURE SENDER UNIT INSPECTION Is water temperature sender unit okay?	Yes	Replace display unit assembly. ☞ 09–22 INSTRUMENT CLUSTER DISASSEMBLY/ASSEMBLY
		No	Replace water temperature sender unit.

8	All warning lights do not illuminate with ignition switch at ON (engine stopped)		
TROUBLESHOOTING HINTS Malfunction in instrument cluster power supply ① Warning lights do not illuminate • METER 10 A fuse malfunction • Print plate malfunction • Malfunction in wiring harness between METER 10 A fuse and instrument cluster			
STEP	**INSPECTION**		**ACTION**
1	Is METER 10 A fuse okay? 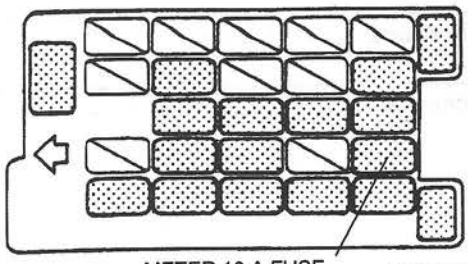 W6U901WV1	Yes	Go to next step.
		No	Replace fuse after repairing wiring harness.
2	Remove meter hood. Remove instrument cluster. Measure voltage at terminal 3N at instrument cluster (14-pin) connector of wiring harness. Is voltage **B+**? 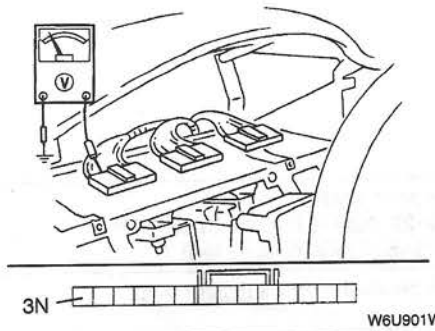 W6U901WV2	Yes	Replace print plate. ☞ 09–22 INSTRUMENT CLUSTER DISASSEMBLY/ASSEMBLY
		No	Repair wiring harness between METER 10 A fuse and instrument cluster.

9	Generator warning light does not illuminate with ignition switch at ON (engine running)		
TROUBLESHOOTING HINTS Malfunction in generator warning light operation circuit ① Generator warning light does not illuminate • Generator malfunction • Print plate malfunction • Generator warning light bulb malfunction • Malfunction in wiring harness between instrument cluster and generator			
STEP	**INSPECTION**		**ACTION**
1	Disconnect generator connector. Connect ground to terminal B of generator connector. Turn ignition switch to ON. Does generator warning light illuminate?	Yes	Replace generator.
		No	Go to next step.
2	Turn ignition switch to LOCK. Remove meter hood. Remove instrument cluster. Check for continuity between terminal 3J at instrument cluster (14-pin) connector of wiring harness and ground. Is there continuity? 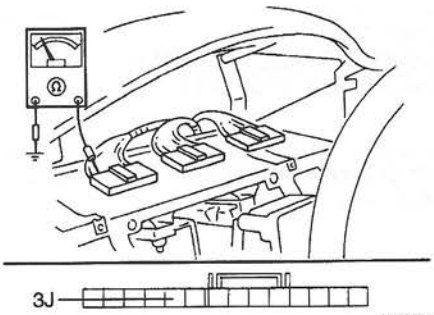 W6U901WV4	Yes	Go to next step.
		No	Repair wiring harness between instrument cluster and generator.
3	Remove generator warning light bulb. Is generator warning light bulb okay? 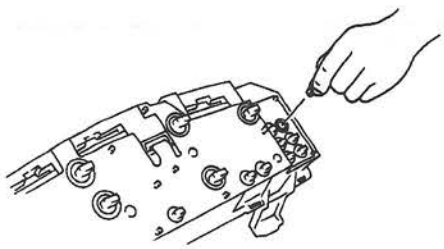 W6U901WV5	Yes	Replace print plate. ☞ 09–22 INSTRUMENT CLUSTER DISASSEMBLY/ASSEMBLY
		No	Replace generator warning light bulb.

10	Brake system warning light does not illuminate with parking brake lever set

TROUBLESHOOTING HINTS

Malfunction in brake system warning light input signal circuit

① Brake system warning light does not illuminate
- Parking brake switch malfunction
- CPU malfunction
- Malfunction in wiring harness between CPU and parking brake switch

Malfunction in brake system warning light operation circuit

① Brake system warning light does not illuminate
- CPU malfunction
- Print plate malfunction
- Brake system warning light bulb malfunction
- Malfunction in wiring harness between instrument cluster and CPU

STEP	INSPECTION		ACTION
1	Remove driver's side front scuff plate. Remove driver's side front side trim. Remove nut fixed in joint box and remove CPU from joint box. Connect ground to terminal 1D of joint box. Turn ignition switch to ON. Does brake system warning light illuminate?	Yes	Go to next step.
		No	Go to step 4.
2	Remove rear console. Disconnect parking brake switch connector. Pull parking brake lever. Check for continuity between terminal A at parking brake switch and ground. Is there continuity? 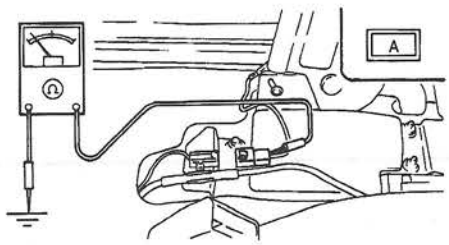 W6U901WV7	Yes	Go to next step.
		No	Replace parking brake switch.
3	Connect ground to terminal A of parking brake switch connector. Check for continuity between terminal 1P at joint box (16-pin) and ground. Is there continuity? 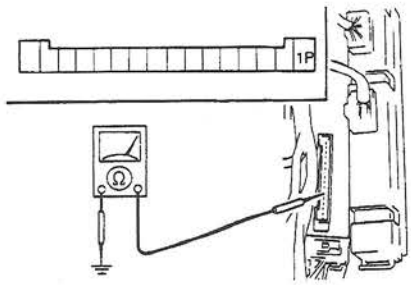 W6U901WV8	Yes	Replace CPU.
		No	Repair wiring harness between CPU and parking brake switch.

STEP	INSPECTION		ACTION
4	Remove meter hood. Remove instrument cluster. Check for continuity between terminal 3L at instrument cluster (14-pin) connector of wiring harness and ground. Is there continuity? 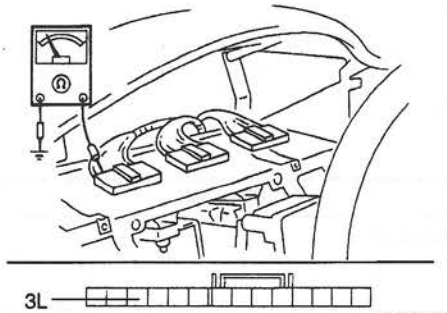 W6U901WV9	Yes	Go to next step.
		No	Repair wiring harness between instrument cluster and CPU.
5	Remove brake system warning light bulb. Is brake system warning light bulb okay? 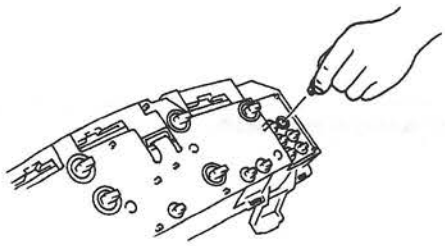 W6U901WVA	Yes	Replace display unit assembly. ☞ 09–22 INSTRUMENT CLUSTER DISASSEMBLY/ASSEMBLY
		No	Replace brake system warning light bulb.

11	Oil pressure warning light does not illuminate with ignition switch at ON (engine stopped)

TROUBLESHOOTING HINTS
Malfunction in oil pressure warning light operation circuit
① Oil pressure warning light does not illuminate
- Oil pressure switch malfunction
- Print plate malfunction
- Oil pressure warning light bulb malfunction
- Malfunction in wiring harness between instrument cluster and oil pressure switch

STEP	INSPECTION		ACTION
1	Remove meter hood. Remove instrument cluster. Check for continuity between terminal 3H at instrument cluster (14-pin) connector of wiring harness and ground. Is there continuity? 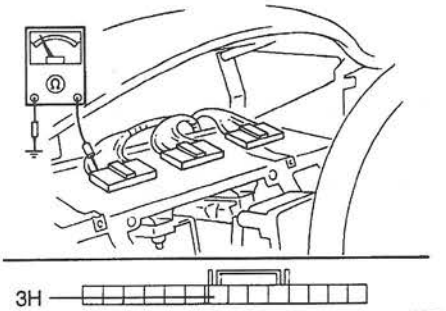 W6U901WVB	Yes	Go to next step.
		No	Go to step 3.
2	Remove oil pressure warning light bulb. Is oil pressure warning light bulb okay? 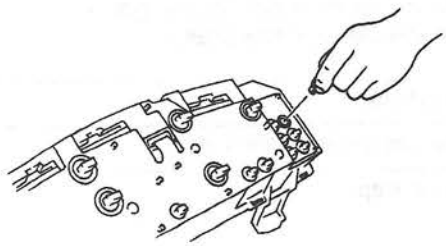 W6U901WVC	Yes	Replace print plate. ☞ 09–22 INSTRUMENT CLUSTER DISASSEMBLY/ASSEMBLY
		No	Replace oil pressure warning light bulb.
3	Disconnect oil pressure switch connector. Check for continuity between terminal A at oil pressure switch and ground. Is there continuity? 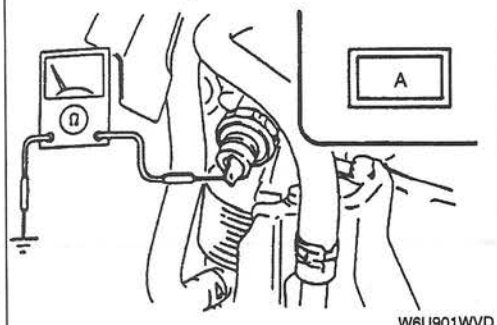 W6U901WVD	Yes	Repair wiring harness between instrument cluster and oil pressure switch.
		No	Replace oil pressure switch.

12	Fuel-level warning light remains illuminated (engine running)		
TROUBLESHOOTING HINTS Malfunction in fuel-level warning light input signal circuit ① Fuel-level warning light remains illuminated • Fuel gauge sender unit malfunction • Print plate malfunction • Display unit assembly malfunction • Malfunction in wiring harness between instrument cluster and fuel gauge sender unit Malfunction in fuel-level warning light operation circuit ① Fuel-level warning light remains illuminated • Display unit assembly malfunction			
STEP	**INSPECTION**		**ACTION**
1	Turn ignition switch to LOCK. Disconnect negative battery cable. After **30 seconds or more**, reconnect negative battery cable. Turn ignition switch to ON and LOCK **3 times**. Turn ignition switch to ON. Push odometer/tripmeter switch **3 times**.  W6U901WVE	Yes	Go to next step.
	Select DTC 16 by pushing odometer/tripmeter switch. Does fuel-level warning light turn on and off **3 times**?	No	Replace display unit assembly. ☞ 09–22 INSTRUMENT CLUSTER DISASSEMBLY/ASSEMBLY
2	Select DTC 22 by pushing odometer/tripmeter switch. Does LCD indicate **"255"**?	Yes	Go to next step.
		No	Replace fuel gauge sender unit.
3	Disconnect fuel pump connector. Check for continuity between terminal C at fuel pump connector of wiring harness and ground. Is there continuity? 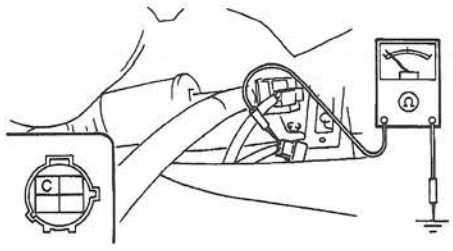 W6U901WVM	Yes	Go to next step.
		No	Repair wiring harness between fuel gauge and ground.

STEP	INSPECTION		ACTION
4	Connect ground to terminal B of fuel pump connector. Remove meter hood. Remove instrument cluster. Check for continuity between terminal 2E at instrument cluster (14-pin) connector of wiring harness and ground. Is there continuity? 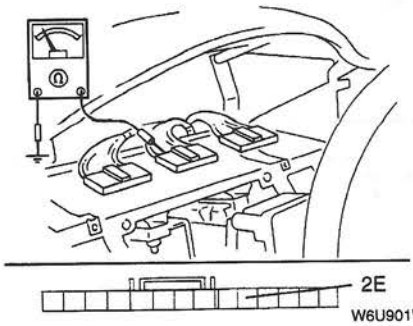 W6U901WVN	Yes	Go to next step.
		No	Repair wiring harness between instrument cluster and fuel gauge sender unit.
5	Disconnect print plate connector. Check for continuity between terminal 2E (14-pin) at print plate and print plate connector 4F (8-pin) terminal. Is there continuity? 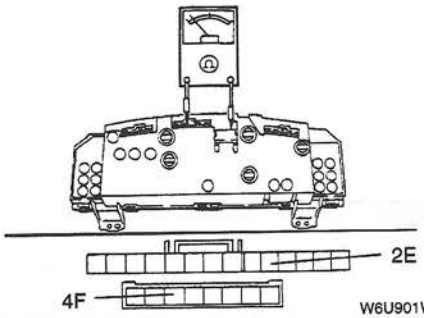 W6U901WVL	Yes	Replace display unit assembly. ☞ 09–22 INSTRUMENT CLUSTER DISASSEMBLY/ASSEMBLY
		No	Replace print plate. ☞ 09–22 INSTRUMENT CLUSTER DISASSEMBLY/ASSEMBLY
6	Remove meter hood. Remove instrument cluster. Remove fuel-level warning light bulb. Is fuel-level warning light bulb okay? 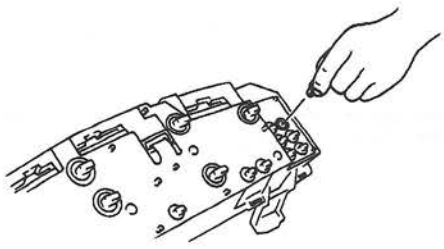 W6U901WVP	Yes	Replace display unit assembly. ☞ 09–22 INSTRUMENT CLUSTER DISASSEMBLY/ASSEMBLY
		No	Replace fuel-level warning light bulb.

13	Fuel-level warning light does not illuminate with fuel tank almost empty (engine running)

TROUBLESHOOTING HINTS

Malfunction in fuel-level warning light input signal circuit

① Fuel-level warning light does not illuminate
- Fuel gauge sender unit malfunction
- Print plate malfunction
- Display unit assembly malfunction
- Malfunction in wiring harness between instrument cluster and fuel gauge sender unit
- Malfunction in wiring harness between fuel gauge sender unit and ground

Malfunction in fuel-level warning light operation circuit

① Fuel-level warning light does not illuminate
- Fuel-level warning light bulb malfunction
- Display unit assembly malfunction

STEP	INSPECTION		ACTION
1	Turn ignition switch to LOCK. Disconnect negative battery cable. After **30 seconds or more**, reconnect negative battery cable. Turn ignition switch to ON and LOCK **3 times**. Turn ignition switch to ON. Push odometer/tripmeter switch **3 times**. 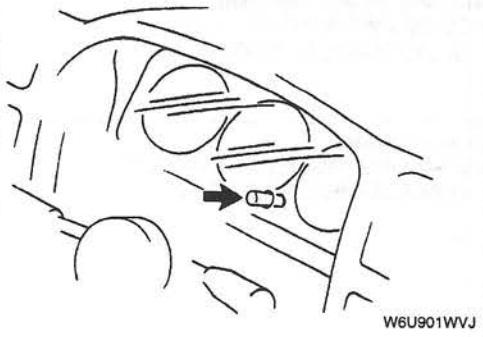 W6U901WVJ Select DTC 16 by pushing odometer/tripmeter switch. Does fuel-level warning light turn on and off **3 times**?	Yes	Go to next step.
		No	Go to step 6.
2	Select DTC 22 by pushing odometer/tripmeter switch. Does LCD indicate **"000"**?	Yes	Go to next step.
		No	Replace fuel gauge sender unit.
3	Remove meter hood. Remove instrument cluster. Disconnect fuel pump connector. Check for continuity between terminal 2E at instrument cluster (14-pin) connector of wiring harness and ground. Is there continuity? 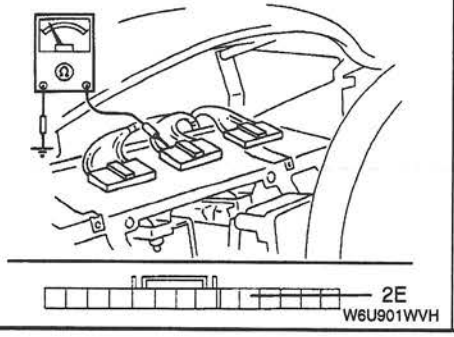 2E W6U901WVH	Yes	Repair wiring harness between instrument cluster and fuel gauge sender unit.
		No	Go to next step.

STEP	INSPECTION		ACTION
4	Disconnect print plate connector. Check for continuity between terminal 2E (14-pin) at print plate and print plate connector 4F (8-pin) terminal. Is there continuity? 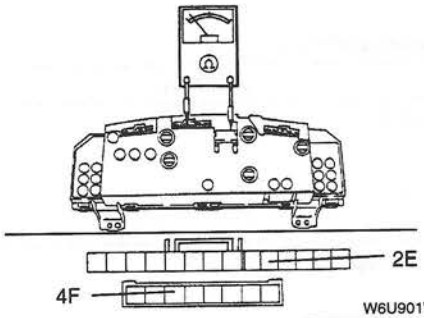	Yes	Replace display unit assembly. ☞ 09–22 INSTRUMENT CLUSTER DISASSEMBLY/ASSEMBLY
		No	Replace print plate. ☞ 09–22 INSTRUMENT CLUSTER DISASSEMBLY/ASSEMBLY

14	Oil pressure warning light remains illuminated (engine running)		
TROUBLESHOOTING HINTS Malfunction in oil pressure warning light operation circuit ① Oil pressure warning light remains illuminated • Oil pressure switch malfunction • Print plate malfunction • Low oil pressure • Malfunction in wiring harness between instrument cluster and oil pressure switch			
STEP	**INSPECTION**		**ACTION**
1	Disconnect oil pressure switch connector. Start engine. Check for continuity between terminal A at oil pressure switch and ground. Is there continuity? 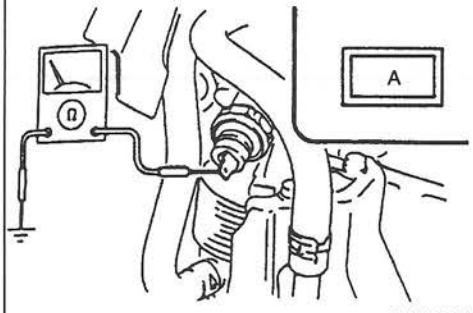 W6U901WVQ	Yes	Go to step 3.
		No	Go to next step.
2	Stop engine. Remove meter hood. Remove instrument cluster. Check for continuity between terminal 3H at instrument cluster (14-pin) connector of wiring harness and ground. Is there continuity? 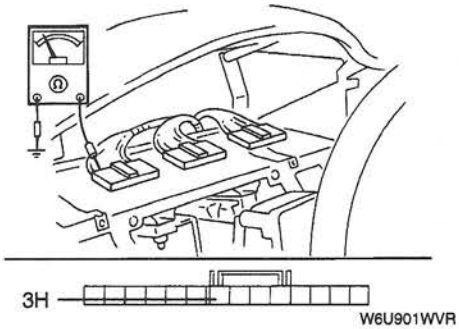 W6U901WVR	Yes	Repair wiring harness between instrument cluster and oil pressure switch.
		No	Replace print plate. ☞ 09–22 INSTRUMENT CLUSTER DISASSEMBLY/ASSEMBLY
3	Measure engine oil pressure. ☞ 01–11 OIL PRESSURE INSPECTION Is engine oil pressure okay?	Yes	Replace oil pressure switch.
		No	Check for cause and repair or replace as necessary.

15	Door ajar warning light does not illuminate with any door open

TROUBLESHOOTING HINTS

Malfunction in CPU power supply/ground circuit

① Door ajar warning light does not illuminate
- ROOM 15 A fuse malfunction
- CPU malfunction
- Malfunction in wiring harness between ROOM 15 A fuse and CPU
- Malfunction in wiring harness between CPU and ground

Malfunction in door ajar warning light input signal circuit

① Door ajar warning light does not illuminate
- Door switch malfunction
- CPU malfunction
- Malfunction in wiring harness between CPU and door switch

Malfunction in door ajar warning light operation circuit

① Door ajar warning light does not illuminate
- CPU malfunction
- Door ajar warning light bulb malfunction
- Print plate malfunction
- Malfunction in wiring harness between instrument cluster and CPU

STEP	INSPECTION		ACTION
1	Turn interior light switch to DOOR position. Open any door. Does interior light illuminate?	Yes	Go to step 7.
		No	Go to next step.
2	Is ROOM 15 A fuse okay? 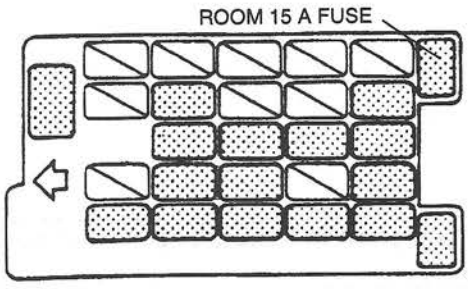 W6U901WVS	Yes	Go to next step.
		No	Replace fuse after repairing wiring harness.
3	Remove driver's side front scuff plate. Remove driver's side front side trim. Remove nut fixed in joint box and remove CPU from joint box. Measure voltage at terminal 1J at joint box (16-pin). Is voltage B+? 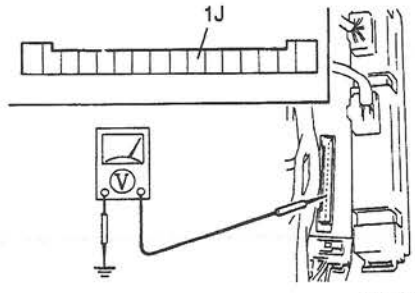 W6U901WVT	Yes	Go to next step.
		No	Repair wiring harness between ROOM 15 A fuse and CPU.

STEP	INSPECTION		ACTION
4	Check for continuity between terminal 1G at joint box (16-pin) and ground. Is there continuity? 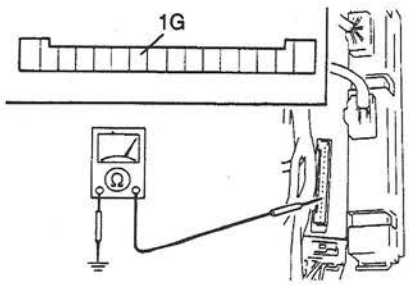 W6U901WVU	Yes	Go to next step.
		No	Repair wiring harness between CPU and ground.
5	Open any door. Check for continuity between terminal 1I at joint box (16-pin) and ground. Is there continuity? 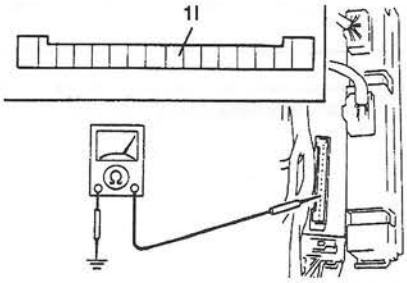 W6U901WVV	Yes	Replace CPU.
		No	Go to next step.
6	Remove door switch. Inspect door switch. ☞ 09–18 DOOR SWITCH INSPECTION Is door switch okay?	Yes	Repair wiring harness between CPU and door switch.
		No	Replace door switch.
7	Remove meter hood. Remove instrument cluster. Remove door ajar warning light bulb. Is door ajar warning light bulb okay? 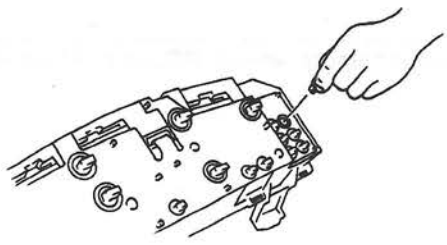 W6U901WVX	Yes	Go to next step.
		No	Replace door ajar warning light bulb.

STEP	INSPECTION		ACTION
8	Remove driver's side front scuff plate. Remove driver's side front side trim. Remove nut fixed in joint box and remove CPU from joint box. Check for continuity between terminal 1E at instrument cluster (12-pin) connector of wiring harness and terminal 1H at joint box (16-pin). Is there continuity? 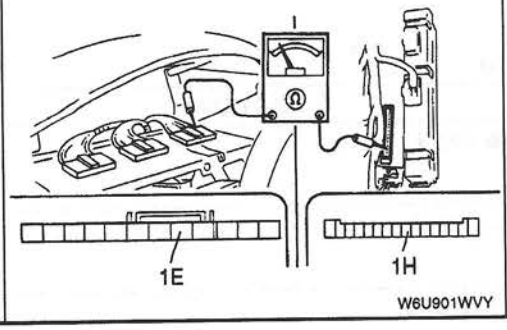 W6U901WVY	Yes	Replace print plate. ☞ 09–22 INSTRUMENT CLUSTER DISASSEMBLY/ASSEMBLY
		No	Repair wiring harness between instrument cluster and CPU.

16	Door ajar warning light remains illuminated with all door closed

TROUBLESHOOTING HINTS

Malfunction in door ajar warning light input signal circuit

① Door ajar warning light remains on
- Door switch malfunction
- CPU malfunction
- Malfunction in wiring harness between CPU and door switch

Malfunction in door ajar warning light operation circuit

① Door ajar warning light remains on
- CPU malfunction
- Print plate malfunction
- Malfunction in wiring harness between instrument cluster and CPU

STEP	INSPECTION		ACTION
1	Remove driver's side front scuff plate. Remove driver's side front side trim. Remove nut fixed in joint box and remove CPU from joint box. Turn ignition switch to ON. Does door ajar warning light illuminate?	Yes	Go to step 4.
		No	Go to next step.
2	Turn ignition switch to LOCK. Open any door. Check for continuity between terminal 1I at joint box (16-pin) and ground. Is there continuity? 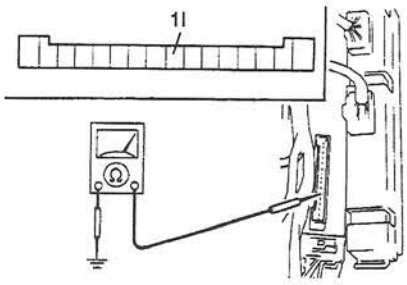 W6U901WW0	Yes	Replace CPU.
		No	Go to next step.
3	Remove door switch. Inspect door switch. ☞ 09–18 DOR SWITCH INSPECTION Is door switch okay?	Yes	Repair wiring harness between CPU and door switch.
		No	Replace door switch.
4	Remove meter hood. Remove instrument cluster. Check for continuity between terminal 1E at instrument cluster (10-pin) connector of wiring harness and ground. Is there continuity? 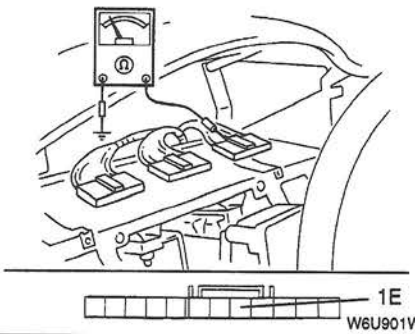 W6U901WW2	Yes	Repair wiring harness between instrument cluster and CPU.
		No	Replace print plate. ☞ 09–22 INSTRUMENT CLUSTER DISASSEMBLY/ASSEMBLY

17	Brake system warning light remains illuminated with parking brake released and brake fluid level above MIN

TROUBLESHOOTING HINTS

Malfunction in brake system warning light input signal circuit

① Brake system warning light remains illuminated
- Parking brake switch malfunction
- CPU malfunction
- Malfunction in wiring harness between CPU and parking brake switch

Malfunction in brake system warning light operation circuit

① Brake system warning light remains illuminated
- CPU malfunction
- Print plate malfunction
- Malfunction in wiring harness between instrument cluster and CPU
- Malfunction in wiring harness between instrument cluster and brake fluid level sensor

STEP	INSPECTION		ACTION
1	Remove driver's side front scuff plate. Remove driver's side front side trim. Remove the fixed in joint box and remove CPU from joint box. Turn ignition switch to ON. Does brake system warning light illuminated?	Yes	Go to step 4.
		No	Go to next step.
2	Remove rear console. Disconnect parking brake switch connector. Release parking brake lever. Check for continuity between terminal A at parking brake switch and ground. Is there continuity? 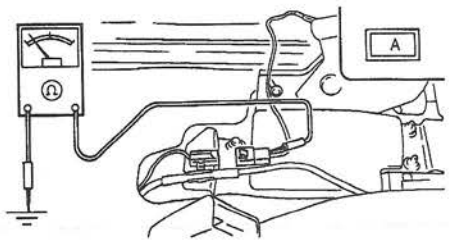 W6U901WW4	Yes	Replace parking brake switch.
		No	Go to next step.
3	Check for continuity between terminal 1P at joint box (16-pin) and ground. Is there continuity? 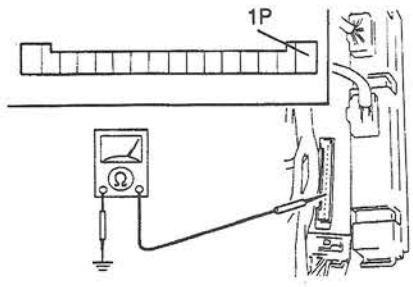 W6U901WW5	Yes	Repair wiring harness between CPU and parking brake switch.
		No	Replace CPU.

STEP	INSPECTION		ACTION
4	Remove meter hood. Remove instrument cluster. Check for continuity between terminal 3L at instrument cluster (14-pin) connector of wiring harness and ground. Is there continuity? 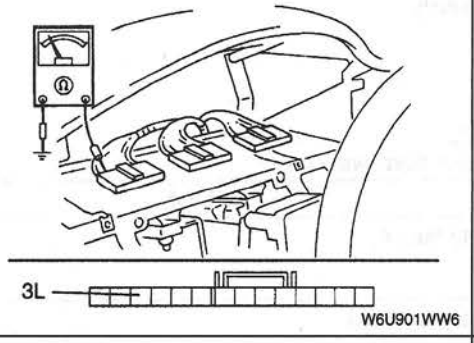 W6U901WW6	Yes	Repair wiring harness between instrument cluster and CPU.
		No	Go to next step.
5	Disconnect brake fluid level sensor connector. Check for continuity between terminal 3L at instrument cluster (14-pin) connector of wiring harness and ground. Is there continuity? 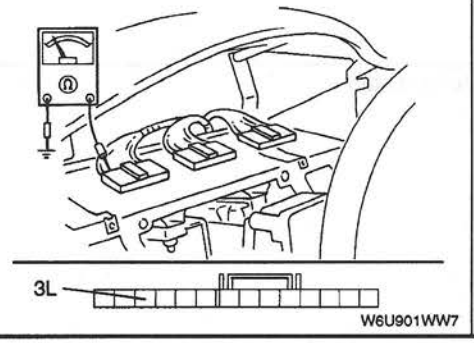 W6U901WW7	Yes	Repair wiring harness between instrument cluster and brake fluid level sensor.
		No	Replace print plate. ☞ 09–22 INSTRUMENT CLUSTER DISASSEMBLY/ASSEMBLY

18	Brake system warning light does not illuminate with brake fluid in reservoir below MIN

TROUBLESHOOTING HINTS

Malfunction in brake system warning light operation circuit

① Brake system warning light does not illuminate
- Brake fluid level sensor malfunction
- Malfunction in wiring harness between instrument cluster and brake fluid level sensor
- Malfunction in wiring harness between brake fluid level sensor and ground

STEP	INSPECTION		ACTION
1	Disconnect brake fluid level sensor connector. Connect ground to terminal B of brake fluid level sensor. Turn ignition switch to ON. Does brake system warning light illuminate?	Yes	Go to next step.
		No	Repair wiring harness between instrument cluster and brake fluid level sensor.
2	Check for continuity between terminal A at brake fluid level sensor and ground. Is there continuity? 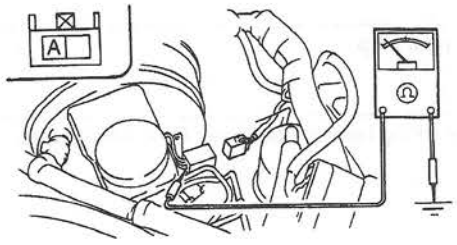 W6U901WW9	Yes	Replace brake fluid level sensor.
		No	Repair wiring harness between brake fluid level sensor and ground.

19	Even if ignition key is left in steering lock, key reminder warning buzzer does not sound when any door is opened

TROUBLESHOOTING HINTS

Malfunction in CPU power supply/ground circuit

① Key reminder warning buzzer does not sound
- ROOM 15 A fuse malfunction
- CPU malfunction
- Malfunction in wiring harness between ROOM 15 A fuse and CPU
- Malfunction in wiring harness between CPU and ground

Malfunction in key reminder warning buzzer input signal circuit

① Key reminder warning buzzer does not sound
- Key reminder switch malfunction
- Door switch malfunction
- CPU malfunction
- Malfunction in wiring harness between key reminder switch and CPU
- Malfunction in wiring harness between CPU and door switch

Malfunction in warning buzzer operation circuit

① Key reminder warning buzzer does not sound
- CPU malfunction

STEP	INSPECTION		ACTION
1	Is ROOM 15 A fuse okay? 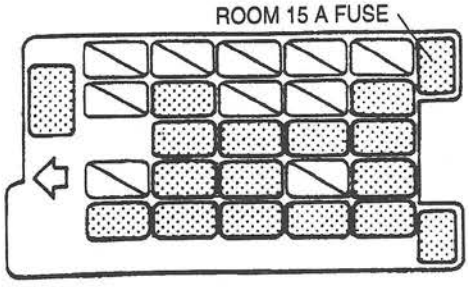 W6U901WWA	Yes	Go to next step.
		No	Replace fuse after repairing wiring harness.

STEP	INSPECTION		ACTION
2	Remove driver's side front scuff plate. Remove driver's side front side trim. Remove nut fixed in joint box and remove CPU from joint box. Measure voltage at terminal 1J at joint box (16-pin). Is voltage **B+**? 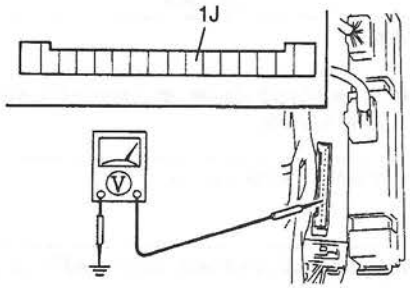 W6U901WWB	Yes	Go to next step.
		No	Repair wiring harness between ROOM 15 A fuse and CPU.
3	Check for continuity between terminal 1G at joint box (16-pin) and ground. Is there continuity? 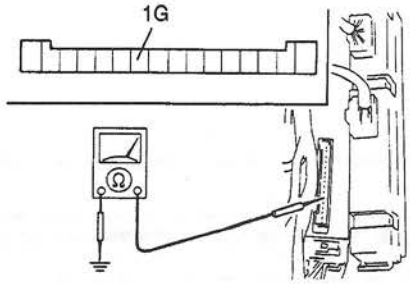 W6U901WWC	Yes	Go to next step.
		No	Repair wiring harness between CPU and ground.
4	Insert key into steering lock. Measure voltage at terminal 1B at joint box (16-pin). Is voltage **B+**? 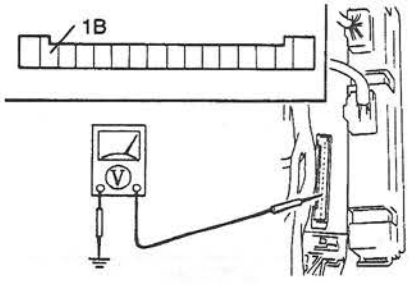 W6U901WWD	Yes	Go to step 7.
		No	Go to next step.

STEP	INSPECTION		ACTION
5	Remove column cover. Measure voltage at terminal A at key reminder switch. Is voltage **B+**? 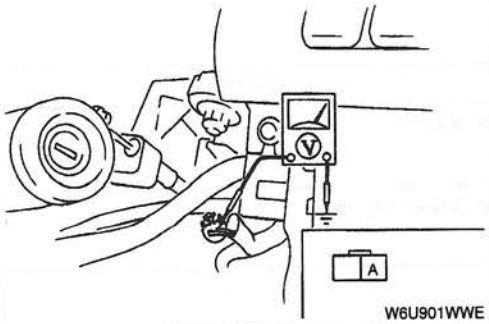 W6U901WWE	Yes	Go to next step.
		No	Repair wiring harness between ROOM 15 A fuse and key reminder switch.
6	Measure voltage at terminal B at key reminder switch connector. Is voltage **B+**? 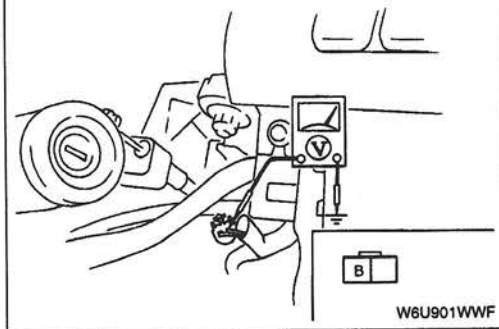 W6U901WWF	Yes	Repair wiring harness between key reminder switch and CPU.
		No	Replace steering lock.
7	Open any door. Check for continuity between terminal 1l at joint box (16-pin) and ground. Is there continuity? 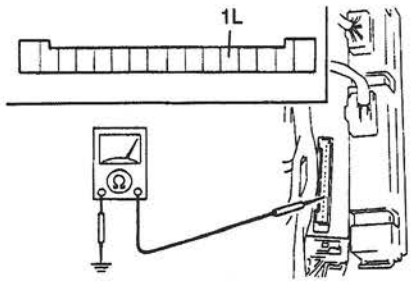 W6U901WWG	Yes	Replace CPU.
		No	Go to next step.
8	Remove door switch. Inspect door switch. ☞ 09–18 DOOR SWITCH INSPECTION Is door switch okay?	Yes	Repair wiring harness between door switch and CPU.
		No	Replace door switch.

20	**Even if ignition key is removed from steering lock, key reminder warning buzzer will sound when any door is opened**		
TROUBLESHOOTING HINTS Malfunction in key reminder warning buzzer input signal circuit ① Key reminder warning buzzer still sounds • Key reminder switch malfunction • CPU malfunction			
STEP	**INSPECTION**		**ACTION**
1	Remove column cover. Remove key reminder switch. Inspect key reminder switch. ☞ 09–21 KEY REMINDER SWITCH INSPECTION Is key reminder switch okay?	Yes	Replace CPU.
		No	Replace steering lock.

09–10 BODY PANELS

FUEL-FILLER LID ADJUSTMENT 09–10–1
FUEL-FILLER LID REMOVAL/INSTALLATION 09–10–1
HOOD ADJUSTMENT 09–10–2
Gap 09–10–2
Height 09–10–2
HOOD REMOVAL/INSTALLATION 09–10–2
TRUNK LID ADJUSTMENT 09–10–3
Gap and Height 09–10–3
Tension 09–10–3
TRUNK LID REMOVAL/INSTALLATION .. 09–10–4
Balance Spring Removal Note 09–10–4
FRONT BUMPER REMOVAL/INSTALLATION 09–10–4
REAR BUMPER REMOVAL/INSTALLATION 09–10–5
FRONT FENDER PANEL REMOVAL/INSTALLATION 09–10–6

FUEL-FILLER LID ADJUSTMENT

W6U910W01

1. Measure the gap and height between the fuel-filler lid and the body.

Clearance	Standard (mm {in})	Minimum (mm {in})	Maximum (mm {in})
a	3.5 {0.14}	2.5 {0.10}	4.5 {0.17}
b	0.5 {0.02}	–0.3 {–0.01}	1.3 {0.05}

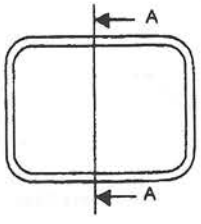

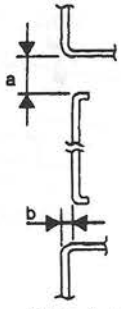

SEC. A–A W6U910WA0

2. If not as specified, loosen the fuel-filler lid installation screws and reposition the fuel-filler lid.
3. Tighten the fuel-filler lid installation screws.

FUEL-FILLER LID REMOVAL/INSTALLATION

W6U910W02

1. Remove the screws, and remove the fuel-filler lid.

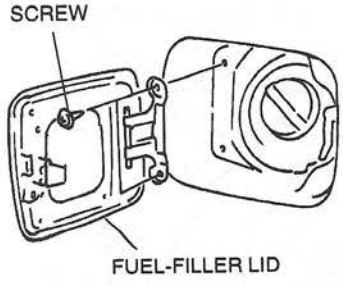

W6U910WA1

2. Install in the reverse order of removal.
3. Adjust the fuel-filler lid. (Refer to 09–10 FUEL-FILLER LID ADJUSTMENT.)

HOOD ADJUSTMENT

W6U910W03

1. Remove the hood lock.
2. Measure the gap and height between the hood and the front fender panel.

Clearance	Standard (mm {in})	Minimum (mm {in})	Maximum (mm {in})
a	4.5 {0.18}	3.5 {0.14}	5.5 {0.21}
b	0 {0}	–0.6 {–0.02}	1.0 {0.03}

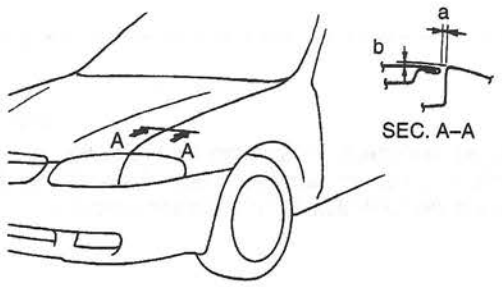

W6U910WA2

3. If not as specified, adjust the gap and height.
4. Install and adjust the hood lock. (Refer to 09–14 HOOD LOCK ADJUSTMENT.)

Gap

1. Loosen the hood installation bolts and reposition the hood.

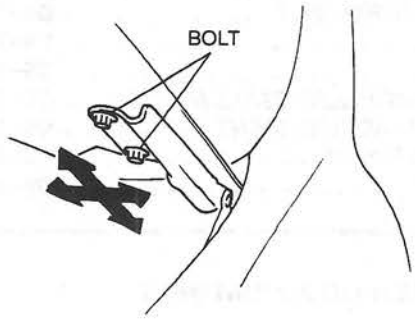

W6U910WA3

2. Tighten the hood installation bolts.

Height

- Turn the stop rubber to adjust the height of the hood.

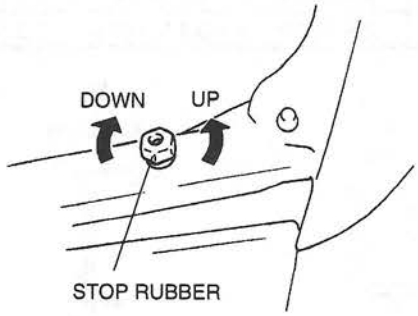

W6U910WA4

HOOD REMOVAL/INSTALLATION

W6U910W04

1. Disconnect the negative battery cable.
2. Pull out the windshield washer pipe.
3. To remove the hood hinge, remove the front bumper and the front fender panel. (Refer to 09–10 FRONT BUMPER REMOVAL/INSTALLATION.) (Refer to 09–10 FRONT FENDER PANEL REMOVAL/INSTALLATION.)
4. Remove in the order indicated in the table.
5. Install in the reverse order of removal.
6. Adjust the hood. (Refer to 09–10 HOOD ADJUSTMENT.)
7. Adjust the headlight aiming. (Refer to 09–18 HEADLIGHT ADJUSTMENT.)

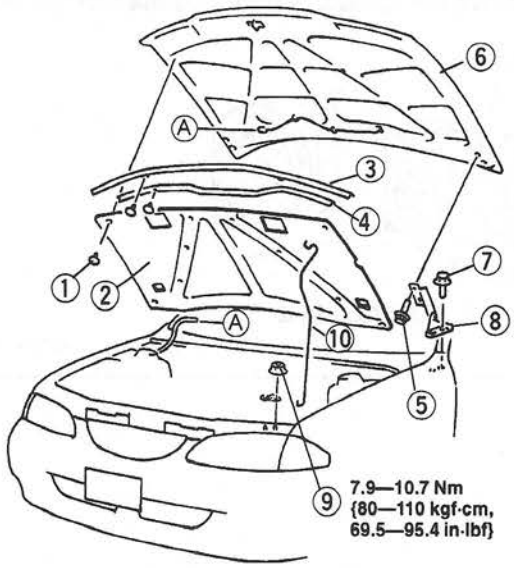

W6U910WA5

1	Fastener
2	Hood insulator
3	Parting seal weatherstrip
4	Shroud seal weatherstrip
5	Bolt A
6	Hood

7	Bolt B
8	Hood hinge
9	Nut
10	Hood stay

TRUNK LID ADJUSTMENT

W6U910W05

Gap and Height

1. Remove the trunk lid striker.
2. Measure the gap and height between the trunk lid and the body.

Clearance	Standard (mm {in})	Minimum (mm {in})	Maximum (mm {in})
a	4.4 {0.17}	3.4 {0.14}	5.4 {0.21}
b	−0.6 {−0.02}	−1.6 {−0.06}	0.4 {0.01}
c	8.1 {0.32}	6.6 {0.26}	9.6 {0.37}

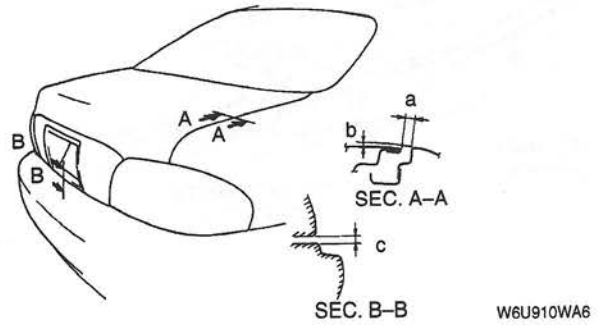

W6U910WA6

3. Hand-tighten the trunk lid striker installation bolts.
4. If not as specified, loosen the trunk lid hinge installation nuts and the trunk lid striker installation bolts, and reposition the trunk lid.
5. Tighten the bolts and nuts.
6. Adjust the trunk lid striker. (Refer to 09–14 TRUNK LID STRIKER ADJUSTMENT.)

Tension

Note

- The trunk lid should raise **70—300 mm {2.8—11.8 in}** when the trunk lid is unlocked.

- Slide the balance spring to the desired position as described below by using a tape-wrapped screwdriver.

○: Position

Tension	Hook bracket	Set position	
		a	b
Standard	Right side		○
	Left side	○	
Increase	Right side		○
	Left side		○
Decrease	Right side	○	
	Left side	○	

RIGHT SIDE

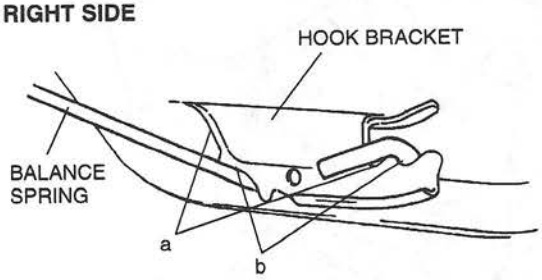

W6U910WA7

LEFT SIDE

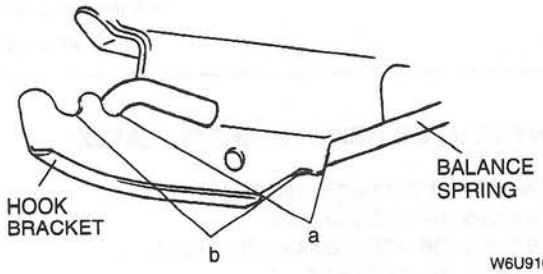

W6U910WA8

TRUNK LID REMOVAL/INSTALLATION

W6U910W06

Warning

- **Removing the balance spring without supporting the trunk lid can be dangerous. The trunk lid may fall and injure you. Open the trunk lid fully and support it before removing the balance spring. Perform these procedures together with another person.**

1. Disconnect the negative battery cable.
2. To remove the trunk lid hinge, remove the rear package trim. (Refer to 09–17 REAR PACKAGE TRIM REMOVAL/INSTALLATION.)
3. Remove in the order indicated in the table.
4. Install in the reverse order of removal.
5. Adjust the trunk lid. (Refer to 09–10 TRUNK LID ADJUSTMENT.)

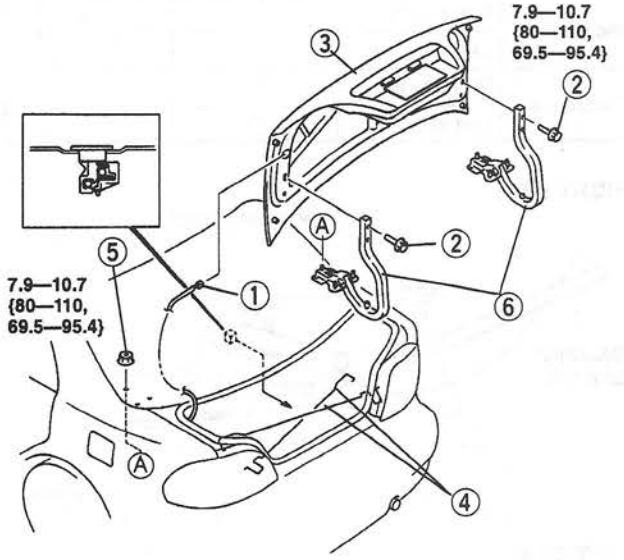

N·m {kgf·cm, in·lbf}

W6U910WA9

1	Connector
2	Bolt
3	Trunk lid
4	Balance spring ☞ Removal note
5	Nut
6	Trunk lid hinge

Balance Spring Removal Note

Caution

- **The balance springs are under high tension.**

1. Carefully lift the balance spring by using a tape-wrapped screwdriver.
2. Remove the balance spring.

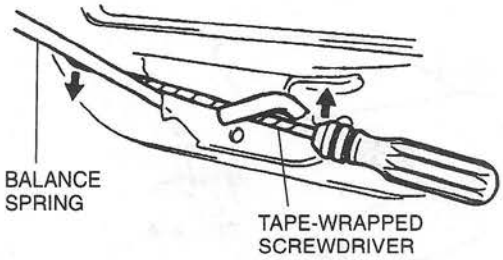

W6U910WAA

FRONT BUMPER REMOVAL/INSTALLATION

W6U910W07

1. Disconnect the negative battery cable.
2. Remove the radiator grille.
3. Remove the front combination light.
4. Remove the headlight.
5. Partially peel off the mud guard.
6. Remove in the order indicated in the table.
7. Install in the reverse order of removal.
8. Adjust the headlight aiming. (Refer to 09–18 HEADLIGHT ADJUSTMENT.)

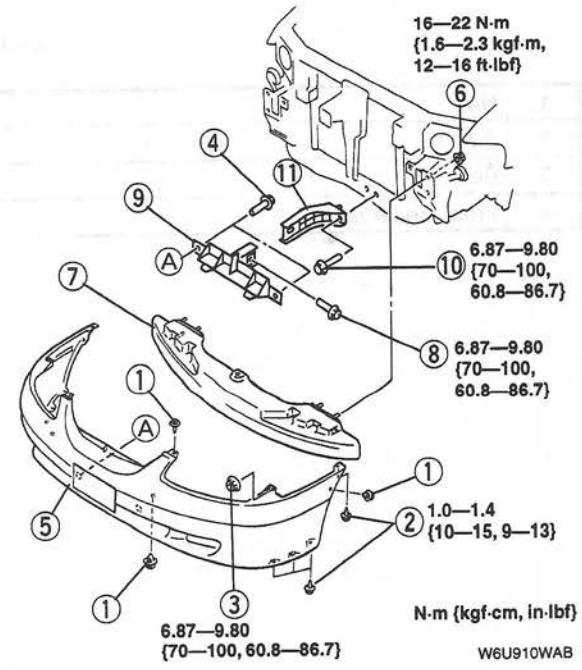

1	Fastener
2	Screw
3	Nut A
4	Bolt A
5	Front bumper
6	Nut B
7	Front bumper reinforcement
8	Bolt B
9	Bracket A
10	Bolt C
11	Bracket B

REAR BUMPER REMOVAL/INSTALLATION

W6U910W08

1. Disconnect the negative battery cable.
2. Remove the rear combination light. (Refer to 09–18 REAR COMBINATION LIGHT REMOVAL/INSTALLATION.)
3. Remove in the order indicated in the table.
4. Install in the reverse order of removal.

1	Fastener A
2	Screw
3	Nut A
4	Fastener B
5	Rear bumper
6	Nut B
7	Rear bumper reinforcement

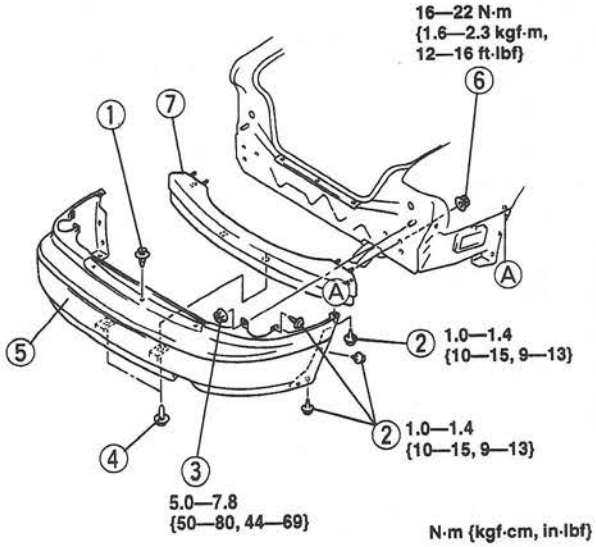

FRONT FENDER PANEL REMOVAL/INSTALLATION

W6U910W09

1. Disconnect the negative battery cable.
2. Remove the mud guard.
3. Remove the front bumper. (Refer to 09–10 FRONT BUMPER REMOVAL/INSTALLATION.)
4. Remove the front fender seal plate.
5. Remove in the order indicated in the table.
6. Install in the reverse order of removal.
7. Adjust the headlight aiming. (Refer to 09–18 HEADLIGHT ADJUSTMENT.)

1	Nut
2	Screw
3	Bolt
4	Front fender panel

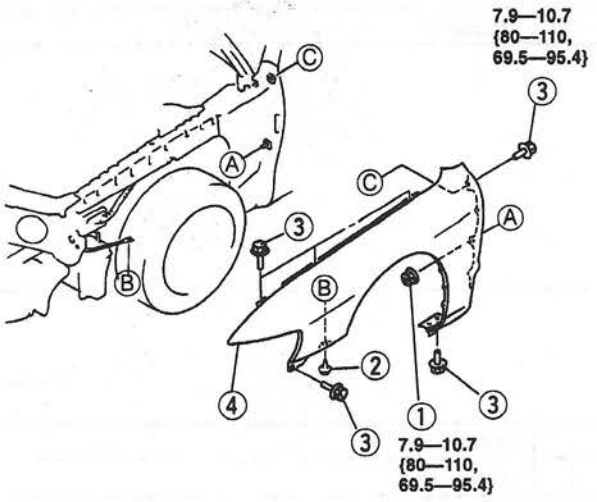

N·m {kgf·cm, in·lbf}

W6U910WAD

09–11 DOORS AND LIFTGATE

FRONT DOOR ADJUSTMENT 09–11–1
FRONT DOOR
REMOVAL/INSTALLATION 09–11–1
Connector Removal Note 09–11–2
Connector Installation Note 09–11–2
FRONT DOOR WEATHERSTRIP
REMOVAL/INSTALLATION 09–11–2
FRONT DOOR LOWER WEATHERSTRIP
REMOVAL/INSTALLATION 09–11–3
REAR DOOR ADJUSTMENT 09–11–3
REAR DOOR
REMOVAL/INSTALLATION 09–11–4
Connector Removal Note 09–11–4
Connector Installation Note 09–11–4
REAR DOOR WEATHERSTRIP
REMOVAL/INSTALLATION 09–11–4
REAR DOOR LOWER WEATHERSTRIP
REMOVAL/INSTALLATION 09–11–5

FRONT DOOR ADJUSTMENT

W6U911W01

1. Remove the front door lock striker.
2. Measure the gap and height between the front door and body.

Clearance	Nominate (mm {in})	Minimum (mm {in})	Maximum (mm {in})
a	5.0 {0.20}	3.0 {0.14}	7.0 {0.25}
b	10.0 {0.40}	8.0 {0.32}	12.0 {0.47}
c	5.0 {0.20}	4.0 {0.16}	6.0 {0.23}
d	0 {0}	–1.5 {–0.05}	1.5 {0.05}
e	0 {0}	–1.0 {–0.03}	0.5 {0.01}
f	4.5 {0.18}	3.5 {0.14}	5.5 {0.21}

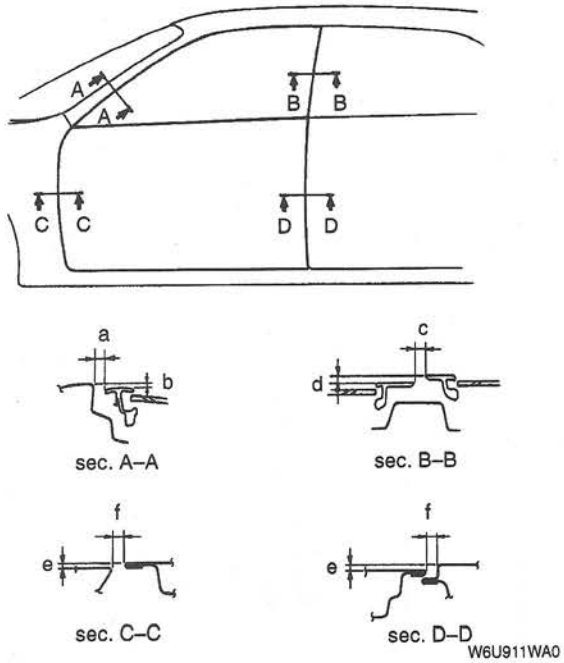

3. Hand tighten the front door lock striker.
4. If not as specified, loosen the door hinge mounting bolts and the front door lock mounting screws, and reposition the door.
5. Tighten the bolts and the screws.
6. Adjust the front door lock striker. (Refer to 09–14 FRONT DOOR LOCK STRIKER ADJUSTMENT.)

FRONT DOOR REMOVAL/INSTALLATION

W6U911W02

1. Disconnect the negative battery cable.
2. To remove the door hinge, remove the front fender panel. (Refer to 09–10 FRONT FENDER PANEL REMOVAL/INSTALLATION.)
3. To remove the checker, remove the door speaker. (Refer to 09–20 DOOR SPEAKER REMOVAL/INSTALLATION.)
4. Remove in the order indicated in the table.
5. Install in the reverse order of removal.

6. Adjust the front door gap and height. (Refer to 09–11 FRONT DOOR ADJUSTMENT.)

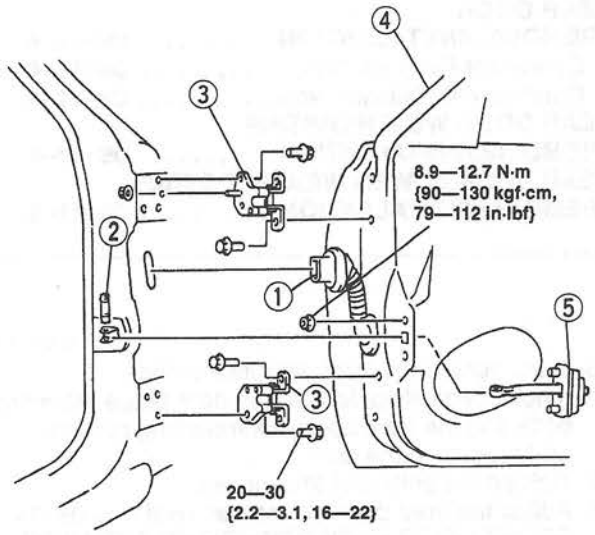

N·m {kgf·m, ft·lbf}

W6U911WA1

1	Connector ☞ Removal Note ☞ Installation Note
2	Checker pin
3	Door hinge
4	Front door
5	Checker

Connector Removal Note

1. Remove the rubber boot from the connector.
2. Pull out the connector from the body.
3. Pull the green pin out until it stops.
4. Disconnect the connector.

Connector Installation Note

1. Install the rubber boot to the connector.
2. Connect the connector.
3. Push the green pin in until it stops for locking the connector.
4. Install the connector to the body with pushing the both side ribs.

FRONT DOOR WEATHERSTRIP REMOVAL/INSTALLATION

W6U911W03

1. Remove the checker pin.
2. Disengage the clips by using a fastener remover.
3. Remove the front door weatherstrip.
4. Install in the reverse order of removal.

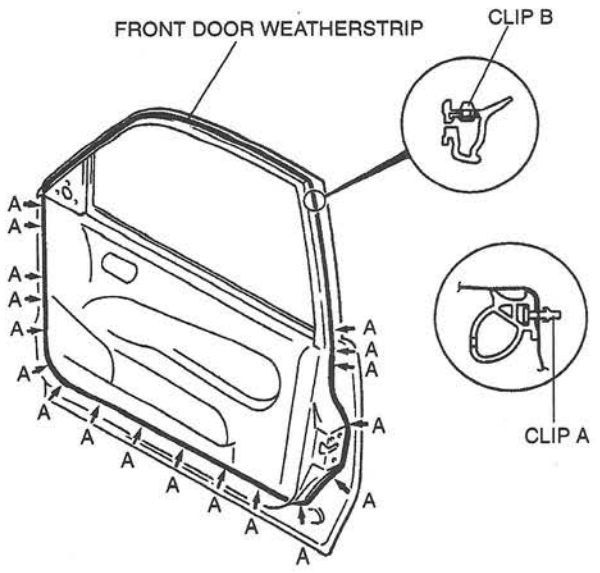

W6U911WA2

FRONT DOOR LOWER WEATHERSTRIP REMOVAL/INSTALLATION

W6U911W04

1. Remove the front door trim. (Refer to 09–17 FRONT DOOR TRIM REMOVAL/INSTALLATION.)
2. Disengage the clips by using a fastener remover.
3. Remove the front door lower weatherstrip.
4. Install in the reverse order of removal.

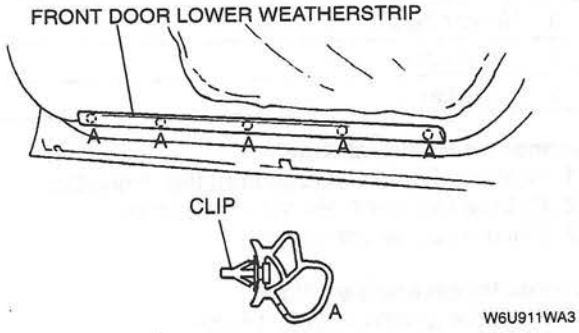

W6U911WA3

REAR DOOR ADJUSTMENT

W6U911W05

1. Remove the rear door lock striker.
2. Measure the gap and height between the rear door and body.
3. Hand tighten the rear door lock striker.
4. If not as specified, loosen the door hinge mounting bolts and the rear door lock mounting screws, and reposition the door.
5. Tighten the bolts and the screws.
6. Adjust the rear door lock striker. (Refer to 09–14 REAR DOOR LOCK STRIKER ADJUSTMENT.)

Clearance	Nominate (mm {in})	Minimum (mm {in})	Maximum (mm {in})
a	4.5 {0.18}	3.5 {0.14}	5.5 {0.21}
b	0 {0}	–1.0 {–0.03}	0.5 {0.01}
c	0 {0}	–0.5 {–0.01}	1.0 {0.03}
d	0 {0}	–1.5 {–0.05}	1.5 {0.05}
e	5.0 {0.20}	4.0 {0.16}	6.0 {0.23}

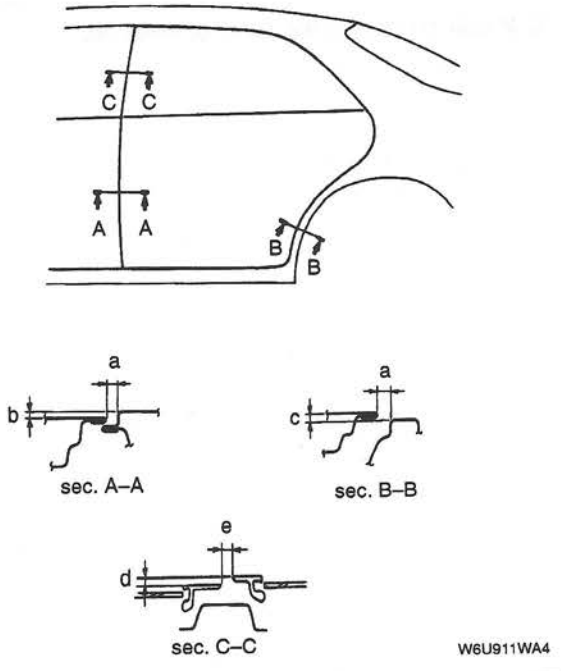

W6U911WA4

REAR DOOR REMOVAL/INSTALLATION

W6U911W06

1. Disconnect the negative battery cable.
2. To remove the checker, remove the rear door screen. (Refer to 09–14 REAR DOOR LOCK AND OPENER REMOVAL/INSTALLATION.)
3. Remove in the order indicated in the table.
4. Install in the reverse order of removal.
5. Adjust the rear door gap and height. (Refer to 09–11 REAR DOOR ADJUSTMENT.)

1	Connector ☞ Removal Note ☞ Installation Note
2	Checker pin
3	Door hinge
4	Rear door
5	Checker

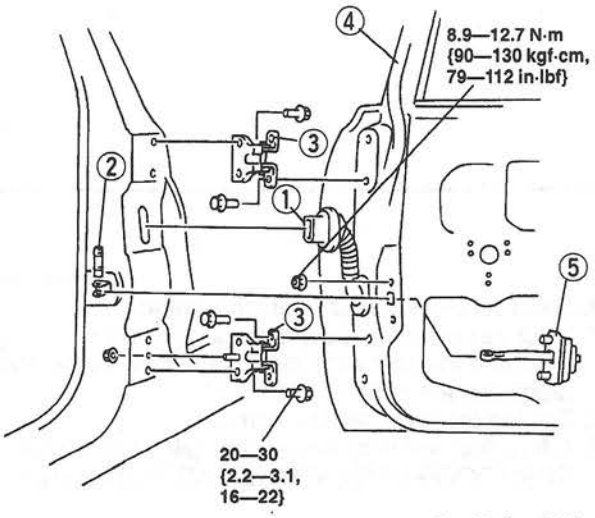

N·m {kgf·m, ft·lbf}

W6U911WA5

Connector Removal Note

1. Remove the rubber boot from the connector.
2. Pull out the green pin out until it stops.
3. Disconnect the connector.

Connector Installation Note

1. Push the green pin until it stops.
2. Install the rubber boot to the connector.
3. Connect the connector.
4. Repush the green pin until it stops for locking the connector.

REAR DOOR WEATHERSTRIP REMOVAL/INSTALLATION

W6U911W07

1. Remove the checker pin.
2. Disengage the clips by using a fastener remover.
3. Remove the rear door weatherstrip.
4. Install in the reverse order of removal.

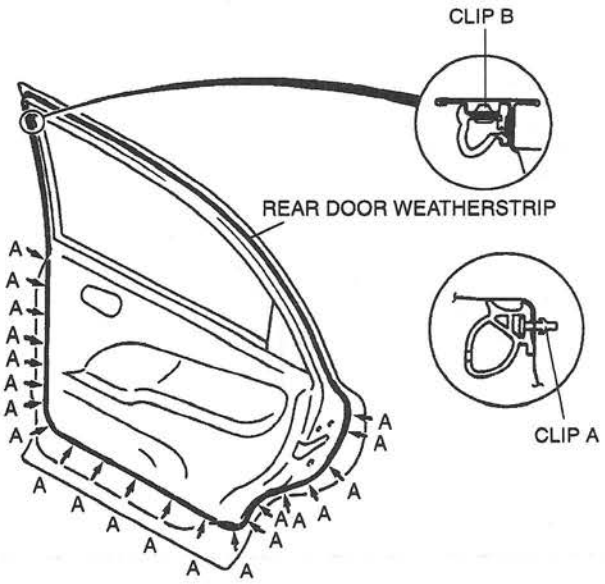

W6U911WA6

REAR DOOR LOWER WEATHERSTRIP REMOVAL/INSTALLATION

W6U911W08

1. Remove the rear door trim. (Refer to 09–17 REAR DOOR TRIM REMOVAL/INSTALLATION.)
2. Disengage the clips by using a fastener remover.
3. Remove the rear door lower weatherstrip.
4. Install in the reverse order of removal.

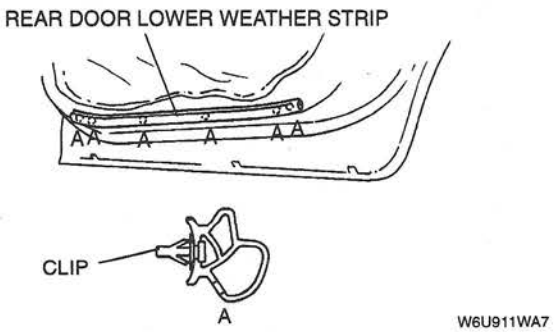

W6U911WA7

09–12 GLASS/WINDOWS/MIRRORS

FRONT DOOR GLASS AND GUIDE REMOVAL/INSTALLATION 09–12–1
REAR DOOR GLASS AND GUIDE REMOVAL/INSTALLATION 09–12–2
FRONT POWER WINDOW REGULATOR INSPECTION 09–12–2
FRONT POWER WINDOW REGULATOR REMOVAL/INSTALLATION 09–12–2
FRONT MANUAL WINDOW REGULATOR REMOVAL/INSTALLATION 09–12–3
REAR POWER WINDOW REGULATOR INSPECTION 09–12–4
REAR POWER WINDOW REGULATOR REMOVAL/INSTALLATION 09–12–4
REAR MANUAL WINDOW REGULATOR REMOVAL/INSTALLATION 09–12–4
POWER WINDOW MAIN SWITCH REMOVAL/INSTALLATION 09–12–5
POWER WINDOW MAIN SWITCH INSPECTION 09–12–6
POWER WINDOW SUBSWITCH REMOVAL/INSTALLATION 09–12–7
POWER WINDOW SUBSWITCH INSPECTION 09–12–8
REGULATOR HANDLE REMOVAL 09–12–8
REGULATOR HANDLE INSTALLATION .. 09–12–9
REAR WINDOW GLASS REMOVAL ... 09–12–9
Not Reusing Rear Window Glass 09–12–9
Reusing Rear Window Glass 09–12–10
REAR WINDOW GLASS INSTALLATION 09–12–11
WINDSHIELD REMOVAL 09–12–12
Not Reusing Windshield 09–12–12
Reusing Windshield 09–12–12
WINDSHIELD INSTALLATION 09–12–13
FILAMENT INSPECTION 09–12–15
FILAMENT REPAIR 09–12–15
REAR WINDOW DEFROSTER SWITCH REMOVAL/INSTALLATION 09–12–15
REAR WINDOW DEFROSTER SWITCH INSPECTION 09–12–16
REAR WINDOW DEFROSTER RELAY REMOVAL/INSTALLATION 09–12–16
REAR WINDOW DEFROSTER RELAY INSPECTION 09–12–16
POWER OUTSIDE MIRROR INSPECTION 09–12–16
POWER OUTSIDE MIRROR REMOVAL/INSTALLATION 09–12–17
MANUAL OUTSIDE MIRROR REMOVAL/INSTALLATION 09–12–17
POWER OUTSIDE MIRROR GLASS REMOVAL 09–12–17
POWER OUTSIDE MIRROR GLASS INSTALLATION 09–12–18
MANUAL OUTSIDE MIRROR GLASS REMOVAL 09–12–18
MANUAL OUTSIDE MIRROR GLASS INSTALLATION 09–12–18
POWER OUTSIDE MIRROR SWITCH REMOVAL/INSTALLATION 09–12–18
POWER OUTSIDE MIRROR SWITCH INSPECTION 09–12–19
REARVIEW MIRROR REMOVAL 09–12–19
REARVIEW MIRROR INSTALLATION .. 09–12–19
BASE REMOVAL 09–12–20
BASE INSTALLATION 09–12–20

FRONT DOOR GLASS AND GUIDE REMOVAL/INSTALLATION

W6U912W01

1. Raise the rear edge of the front door glass **about 90 mm {3.5 in}** from the fully lowered position.
2. Remove the front door screen. (Refer to 09–14 FRONT DOOR LOCK AND OPENER REMOVAL/INSTALLATION.)
3. Remove the screws.
4. Remove the front door glass.
5. Remove the glass run channel.

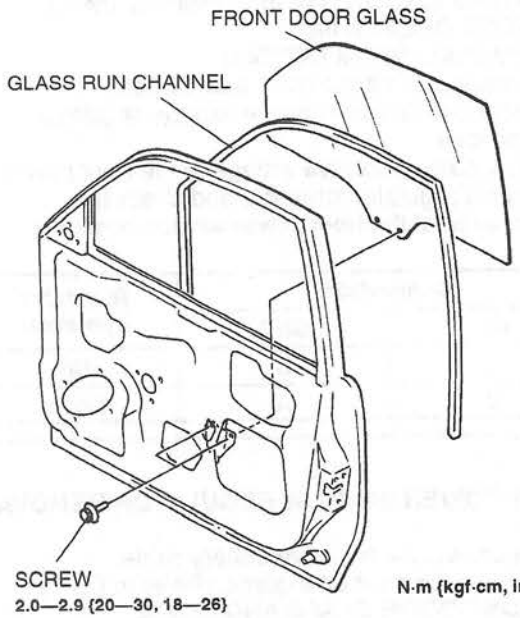

W6U912WA0

6. Install in the reverse order of removal.

REAR DOOR GLASS AND GUIDE REMOVAL/INSTALLATION

W6U912W02

1. Lower the rear door glass fully.
2. Remove the rear door screen. (Refer to 09–14 REAR DOOR LOCK AND OPENER REMOVAL/INSTALLATION.)
3. Remove the rear beltline molding. (Refer to 09–16 REAR BELTLINE MOLDING REMOVAL/INSTALLATION.)
4. Remove the screws, bolt and clip.
5. Remove the rear door glass guide.

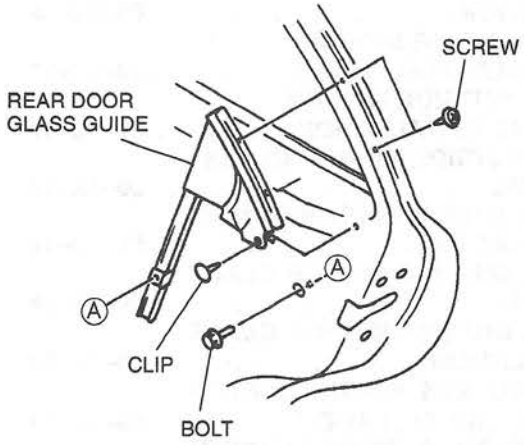

W6U912WA1

6. Raise the rear edge of the rear door glass **about 90 mm {3.5 in}** from the fully lowered position.
7. Remove the screws.
8. Remove the rear door glass.
9. Remove the glass run channel.

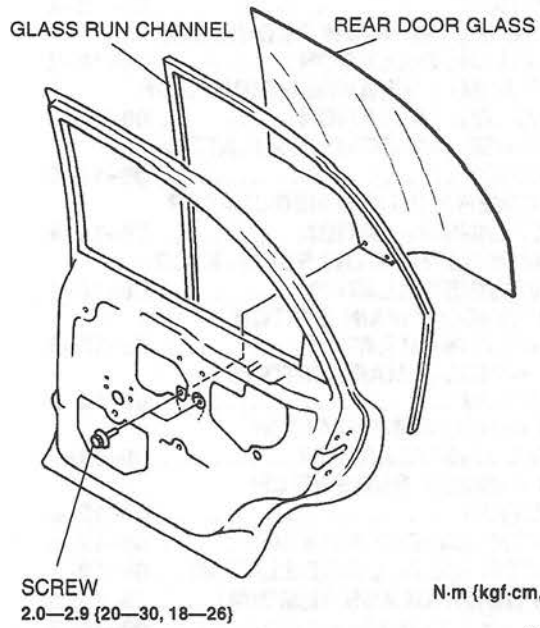

W6U912WA2

10. Install in the reverse order of removal.

FRONT POWER WINDOW REGULATOR INSPECTION

W6U912W03

1. Disconnect the negative battery cable.
2. Remove the front door trim. (Refer to 09–17 FRONT DOOR TRIM REMOVAL/INSTALLATION.)
3. Partially peel off the front door screen.
4. Disconnect the front power window regulator connector.
5. Apply battery positive voltage to the front power window regulator terminals and check the operation of the front power window regulator.

Connection		Regulator operation
B+	GND	
A	B	Up
B	A	Down

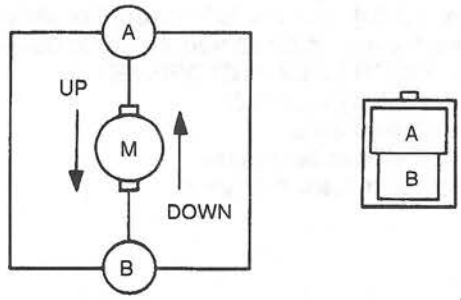

W6U912WA3

6. If not as specified, replace the front power window regulator.

FRONT POWER WINDOW REGULATOR REMOVAL/INSTALLATION

W6U912W04

1. Disconnect the negative battery cable.
2. Remove the front door glass. (Refer to 09–12 FRONT DOOR GLASS AND GUIDE REMOVAL/INSTALLATION.)
3. Disconnect the negative battery cable.
4. Remove in the order indicated in the table.
5. Install in the reverse order of removal.

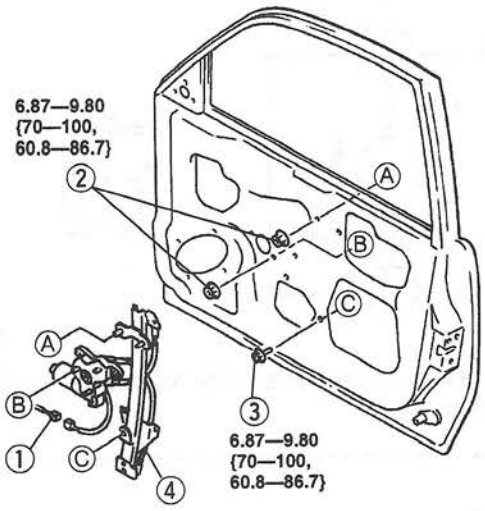

N·m {kgf·cm, in·lbf}

W6U912WA4

1	Connector
2	Nut
3	Bolt
4	Front power window regulator

FRONT MANUAL WINDOW REGULATOR REMOVAL/INSTALLATION

W6U912W05

1. Remove the regulator handle. (Refer to 09–12 REGULATOR HANDLE REMOVAL.) (Refer to 09–12 REGULATOR HANDLE INSTALLATION.)
2. Remove the front door glass. (Refer to 09–12 FRONT DOOR GLASS AND GUIDE REMOVAL/INSTALLATION.)
3. Remove in the order indicated in the table.
4. Install in the reverse order of removal.

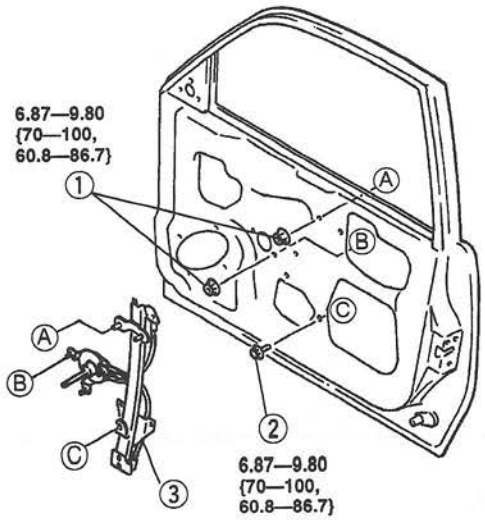

N·m {kgf·cm, in·lbf}

W6U912WA5

1	Nut
2	Bolt
3	Front manual window regulator

REAR POWER WINDOW REGULATOR INSPECTION

W6U912W06

1. Disconnect the negative battery cable.
2. Remove the rear door trim.
3. Partially peel off the rear door screen.
4. Disconnect the rear power window regulator connector.
5. Apply battery positive voltage to the rear power window regulator terminals and check the operation of the rear power window regulator.

Connection		Regulator operation
B+	GND	
A	B	Up
B	A	Down

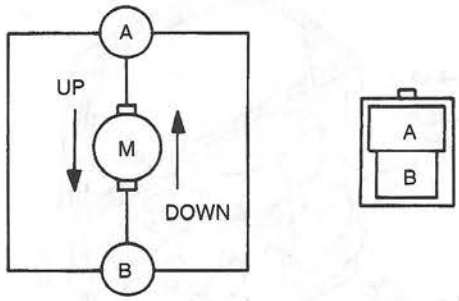

W6U912WA6

6. If not as specified, replace the rear power window regulator.

REAR POWER WINDOW REGULATOR REMOVAL/INSTALLATION

W6U912W07

1. Disconnect the negative battery cable.
2. Remove the rear door glass. (Refer to 09–12 REAR DOOR GLASS AND GUIDE REMOVAL/INSTALLATION.)
3. Disconnect the negative battery cable.
4. Remove in the order indicated in the table.
5. Install in the reverse order of removal.

1	Connector
2	Nut
3	Bolt
4	Rear power window regulator

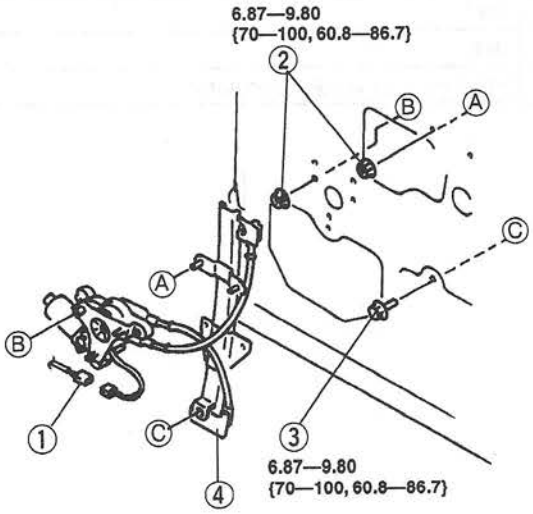

N·m {kgf·cm, in·lbf}

W6U912WA7

REAR MANUAL WINDOW REGULATOR REMOVAL/INSTALLATION

W6U912W08

1. Remove the regulator handle. (Refer to 09–12 REGULATOR HANDLE REMOVAL.) (Refer to 09–12 REGULATOR HANDLE INSTALLATION.)
2. Remove the rear door glass. (Refer to 09–12 REAR DOOR GLASS AND GUIDE REMOVAL/INSTALLATION.)
3. Remove in the order indicated in the table.
4. Install in the reverse order of removal.

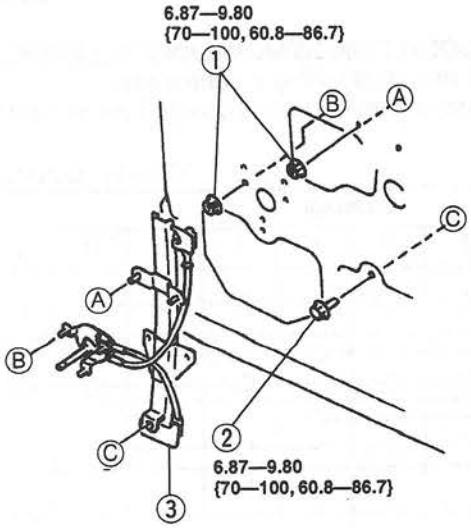

N·m {kgf·cm, in·lbf}

W6U912WA8

1	Nut
2	Bolt
3	Rear manual window regulator

POWER WINDOW MAIN SWITCH REMOVAL/INSTALLATION

W6U912W09

1. Disconnect the negative battery cable.
2. Remove the driver's side front door trim. (Refer to 09–17 FRONT DOOR TRIM REMOVAL/INSTALLATION.)
3. Remove in the order indicated in the table.
4. Install in the reverse order of removal.

1	Screw
2	Power window main switch
3	Clip
4	Switch panel

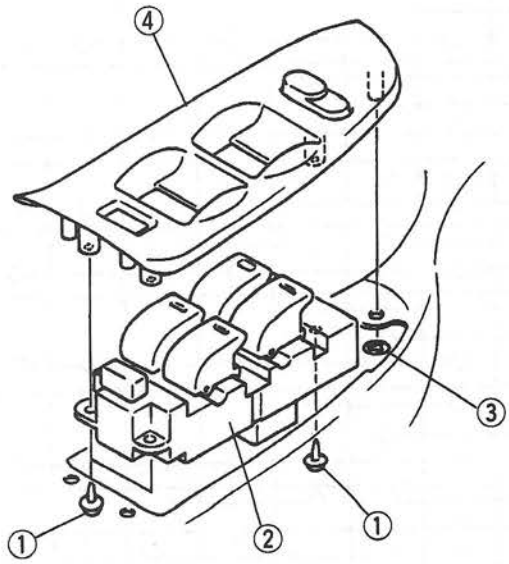

W6U912WA9

POWER WINDOW MAIN SWITCH INSPECTION

W6U912W10

1. Disconnect the negative battery cable.
2. Remove the driver's side front door trim. (Refer to 09–17 FRONT DOOR TRIM REMOVAL/INSTALLATION.)
3. Inspect for the continuity between the power window main switch terminals by using an ohmmeter.
4. When checking the driver's side, connect the battery positive voltage to terminal H and connect the ground to the terminal F.

○—○ : Continuity

Power-cut switch	Switch position		Terminal									
			A	B	C	D	F	H	I	J	K	L
On	Off		○	○	○	○	○		○	○	○	○
	Driver	Manual close	○	○	○	○	○	○	○	○	○	○
		Auto open Manual open	○	○	○	○	○	○	○	○	○	○
	Passenger	Close	○	○	○	○	○	○	○	○	○	○
		Open	○	○	○	○	○	○	○	○	○	○
	Left rear	Close	○	○	○	○	○	○	○	○	○	○
		Open	○	○	○	○	○	○	○	○	○	○
	Right rear	Close	○	○	○	○	○	○	○	○	○	○
		Open	○	○	○	○	○	○	○	○	○	○
Off	Off		○	○	○	○	○		○	○	○	○
	Driver	Manual close	○	○	○	○	○	○	○	○	○	○
		Auto open Manual open	○	○	○	○	○	○	○	○	○	○
	Passenger	Close	○	○	○	○	○	○	○	○	○	○
		Open	○	○	○	○	○	○	○	○	○	○
	Left rear	Close	○	○	○	○	○	○	○	○	○	○
		Open	○	○	○	○	○	○	○	○	○	○
	Right rear	Close	○	○	○	○	○	○	○	○	○	○
		Open	○	○	○	○	○	○	○	○	○	○

W6U912WAA

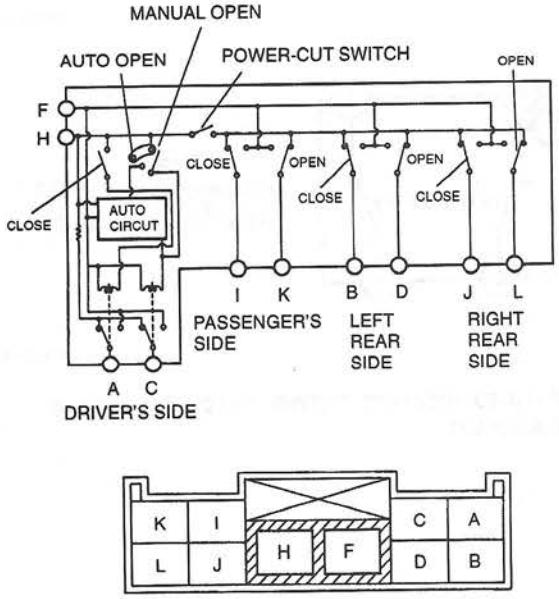

W6U912WAB

5. If not as specified, replace the power window main switch.

POWER WINDOW SUBSWITCH REMOVAL/INSTALLATION

W6U912W11

1. Disconnect the negative battery cable.
2. Remove the passenger's side front door trim or rear door trim. (Refer to 09–17 FRONT DOOR TRIM REMOVAL/INSTALLATION.) (Refer to 09–17 REAR DOOR TRIM REMOVAL/INSTALLATION.)
3. Remove in the order indicated in the table.
4. Install in the reverse order of removal.

1	Screw
2	Power window subswitch
3	Clip
4	Switch panel

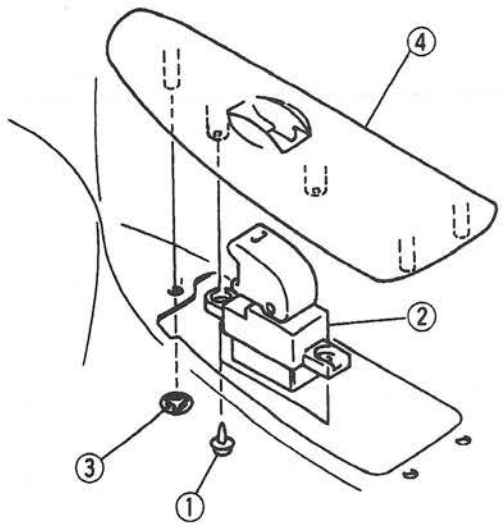

W6U912WAC

POWER WINDOW SUBSWITCH INSPECTION

W6U912W12

1. Disconnect the negative battery cable.
2. Remove the passenger's side front door trim or rear door trim. (Refer to 09–17 FRONT DOOR TRIM REMOVAL/INSTALLATION.) (Refer to 09–17 REAR DOOR TRIM REMOVAL/INSTALLATION.)
3. Inspect for the continuity between the power window subswitch terminals by using an ohmmeter.

O—O : Continuity

Switch position	Terminal				
	A	B	C	E	F
Close	O		O	O	
Off	O			O	O
Open		O		O	O

W6U912WAD

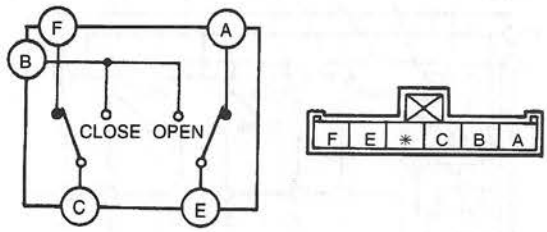

W6U912WAE

4. If not as specified, replace the power window subswitch.

REGULATOR HANDLE REMOVAL

W6U912W13

1. Remove the regulator handle clip by using a rag as shown.
2. Remove the regulator handle.

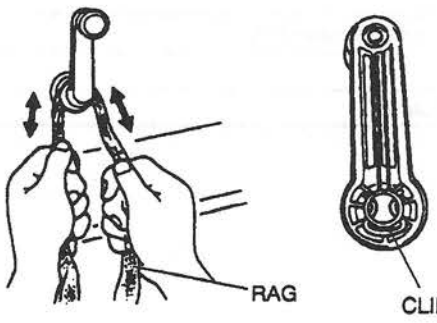

W6U912WAF

REGULATOR HANDLE INSTALLATION

W6U912W14

1. Install the clip in the regulator handle.
2. Set the door glass at the fully-raised position and push the regulator handle on as shown.

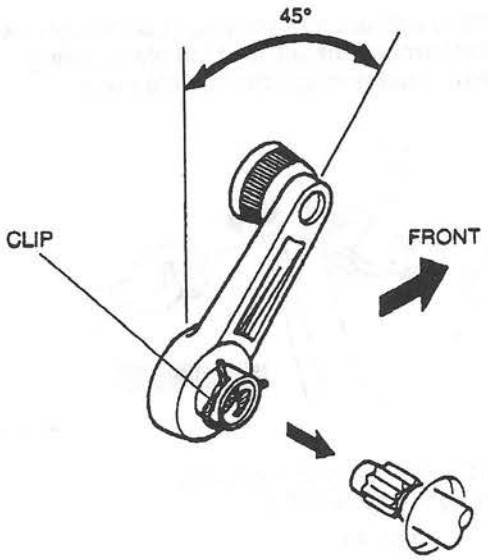

W6U912WAG

REAR WINDOW GLASS REMOVAL

W6U912W15

Not Reusing Rear Window Glass

1. Disconnect the negative battery cable.
2. Remove the C-pillar trim. (Refer to 09–17 C-PILLAR TRIM REMOVAL/INSTALLATION.)
3. Remove the rear package trim. (Refer to 09–17 REAR PACKAGE TRIM REMOVAL/INSTALLATION.)
4. Apply protective tape along the edge of the headliner to protect it from damage.
5. Apply protective tape along the edge of the body to protect it from damage.

Note

- The rear window molding is a replacement part.

6. Remove the lip of the rear window molding by using a razor knife.

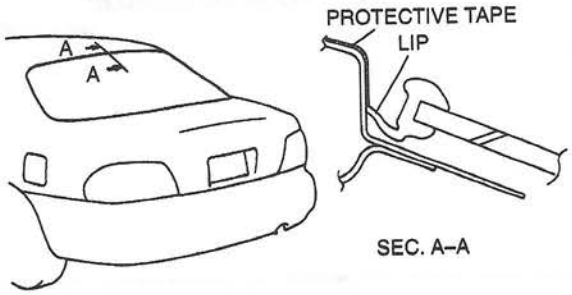

W6U912WAH

Note

- For the areas of the sealant that are difficult to cut, use a piano wire and follow the procedures under "Reusing Rear Window Glass".
- There are clips installed in the areas indicated in the figure.

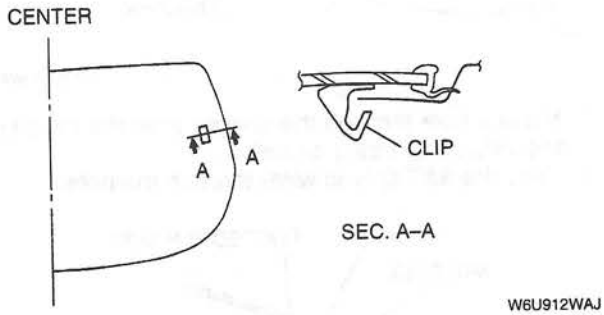

W6U912WAJ

7. Use a tool like that shown in the figure, and insert the blade into the sealant.
8. Pull through the sealant around the edge of the glass.

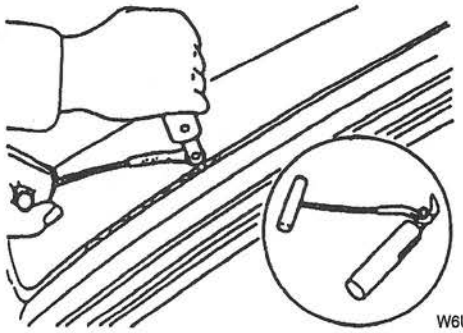
W6U912WAK

9. Remove the glass.

Reusing Rear Window Glass

1. Disconnect the negative battery cable.
2. Remove the C-pillar trim. (Refer to 09–17 C-PILLAR TRIM REMOVAL/INSTALLATION.)
3. Remove the rear package trim. (Refer to 09–17 REAR PACKAGE TRIM REMOVAL/INSTALLATION.)
4. Apply protective tape along the edge of the headliner to protect it from damage.
5. Apply protective tape along the edge of the body to protect it from damage.

Note

- The rear window molding is a replacement part.

6. Remove the lip of the rear window molding by using a razor knife.

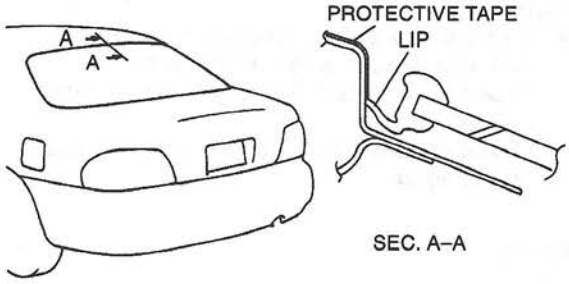

W6U912WAL

7. Make a hole through the sealant from the inside of the vehicle by using an awl.
8. Pass the **SST** (piano wire) through the hole.

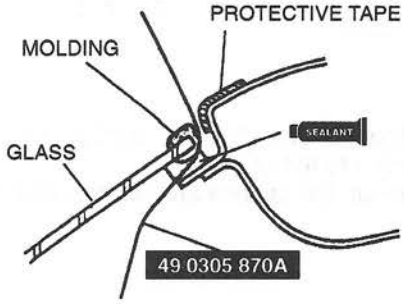

W6U912WAM

9. Wind each end of the wire around bar.

Note

- Use the entire length of piano wire to prevent it from breaking when cutting through the sealant.

10. Working with another person, saw through the sealant around the edge of the glass, being careful to not damage the vehicle body.

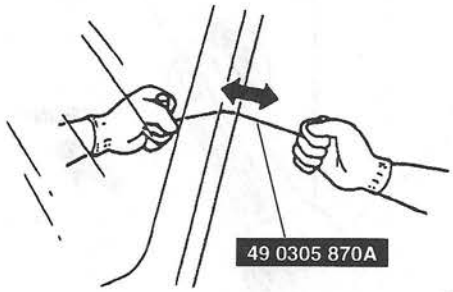

W6U912WAN

11. Remove the rear window glass.
12. Remove the clips and dam.

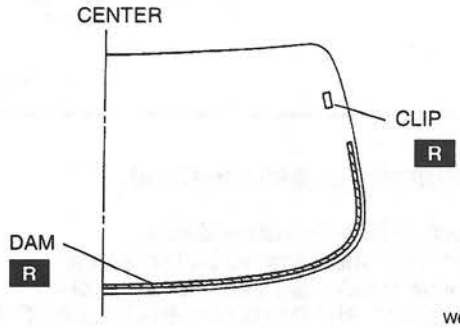

W6U912WAP

13. Remove the clips from the body.
14. Remove the rear window molding from the rear window glass.

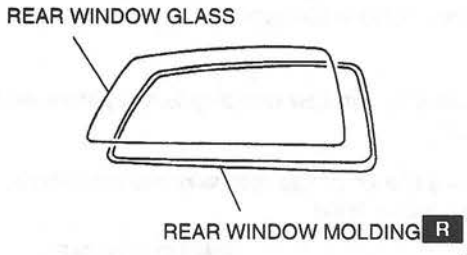

W6U912WAQ

REAR WINDOW GLASS INSTALLATION

Caution
- **To prevent the sealant from cracking or the glass from being pushed out by air pressure if a door is closed, open all of the windows and leave them open until the sealant has hardened.**

1. Cut away the old sealant by using a razor knife so that **1—2 mm {0.04—0.07 in}** thickness of sealant remains around the circumference of the frame. If all the sealant has come off in any one place, apply some primer after degreasing, and allow it **30 minutes** to dry. Then put on new sealant to create a **2 mm {0.08 in}** layer.

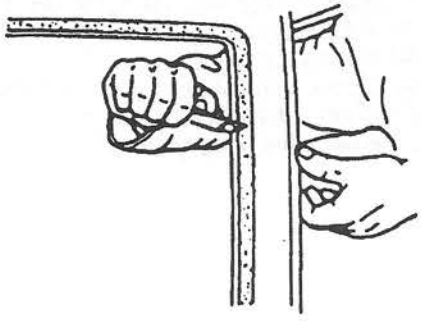

W6U912WAR

2. Clean and degrease an **approximately 50 mm {1.97 in}** wide strip around the circumference of the glass and the bonding area on the body.
3. Align the weld joint of the molding with the ceramic parting line on the glass. (A)
4. Install the lower, starting from the center and moving outward. (B)
5. Install the side and upper, starting from the lower edge and moving upward and inward, being careful to not pull out the corners. (C)
6. Install the side and lower, starting from the upper edge and moving downward and inward, being careful to not pull out the corners. (D)

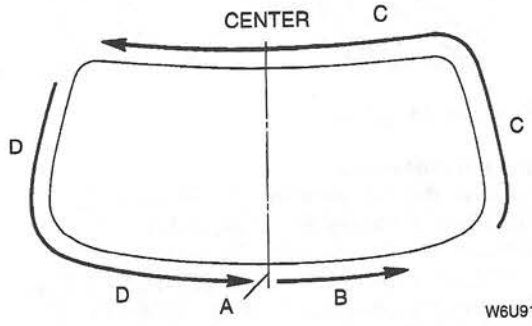

W6U912WAS

7. Securely bond a dam on the glass **14.5 mm {0.571 in}** from the edge.

W6U912W16

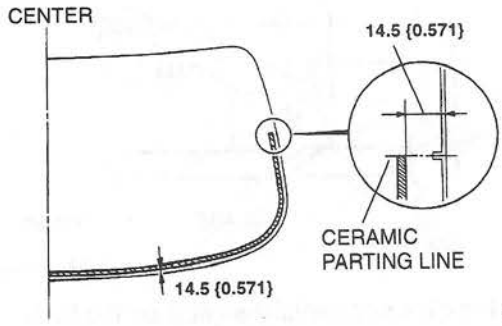

mm {in}

W6U912WAT

8. Install the clips onto the glass as shown.

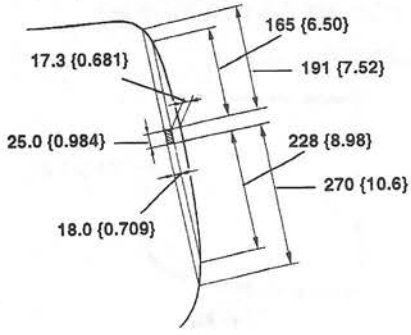

mm {in}

W6U912WAU

Caution
- **Keep the area free of dirt and grease, and do not touch the surface or the primer may not properly bond to the surface of the glass and body which may cause leaks to occur.**

9. Use a brush to apply primer to the bonding area of the glass and body within the region shown. Use only glass primer on the glass and body primer on the body and molding. Allow it to dry for **approximately 30 minutes**.

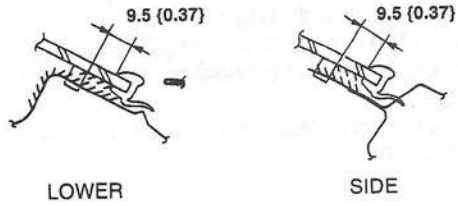

mm {in}

W6U912WAV

10. Once the primer is dry, apply sealant around the entire circumference to fill the gap between the dam and the edge of the molding with a **11—13 mm {0.44—0.51 in}** high **5 mm {0.2 in}** wide bead of sealant. Apply sealant beside the molding.

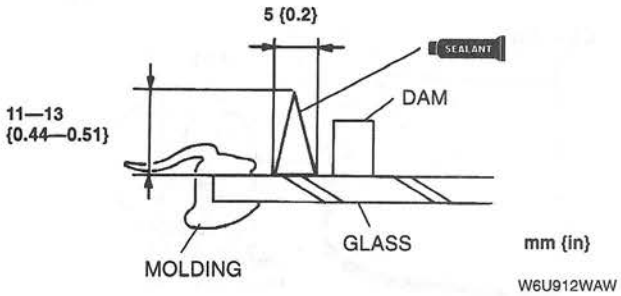

11. Align the clips and install the glass on the body.
12. Verify that the gap along the upper edge is **6.8 mm {0.27 in}**, lower edge is **6.7 mm {0.26 in}** and sides edge are **7.1 mm {0.28 in}**.

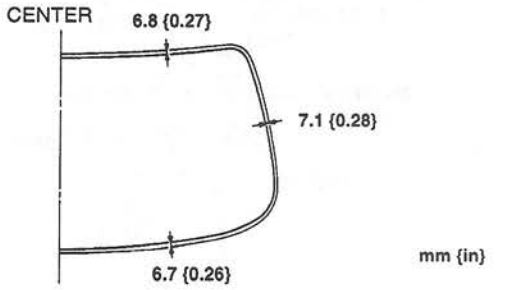

13. Press firmly inward on the glass to compress the sealant.
14. Use a scraper to smooth away any sealant that oozes out.

Hardening time of sealant

Temperature	Surface hardening time	Time required until car can be put into service
5 °C {41 °F}	Approx. 1.5 h	Approx. 12 h
20 °C {68 °F}	Approx. 1 h	Approx. 4 h
35 °C {95 °F}	Approx. 10 min	Approx. 2 h

15. Check for water leaks. If the leak is found, wipe the water off well and repeat the installation.
16. Install the rear package trim. (Refer to 09–17 REAR PACKAGE TRIM REMOVAL/INSTALLATION.)
17. Install the C-pillar trim. (Refer to 09–17 C-PILLAR TRIM REMOVAL/INSTALLATION.)
18. Connect the negative battery cable.

WINDSHIELD REMOVAL

Not Reusing Windshield

1. Remove the rearview mirror. (Refer to 09–12 REARVIEW MIRROR REMOVAL.)
2. Remove the A-pillar trim. (Refer to 09–17 A-PILLAR TRIM REMOVAL/INSTALLATION.)
3. Remove the cowl grille. (Refer to 09–16 COWL GRILLE REMOVAL/INSTALLATION.)
4. Remove the windshield molding. (Refer to 09–16 WINDSHIELD MOLDING REMOVAL.)
5. Apply protective tape along the edge of the body to protect it from damage.
6. Remove the sunvisor, and apply protective tape along the edge of the headliner to protect it from damage.
7. Apply protective tape to the dashboard to protect it from damage.

Note

- For the areas of the sealant that are difficult to cut, use a piano wire and follow the procedures under "Reusing Windshield".

8. Use a tool like that shown in the figure, and insert the blade into the sealant.
9. Pull through the sealant around the edge of the glass.

W6U912W17

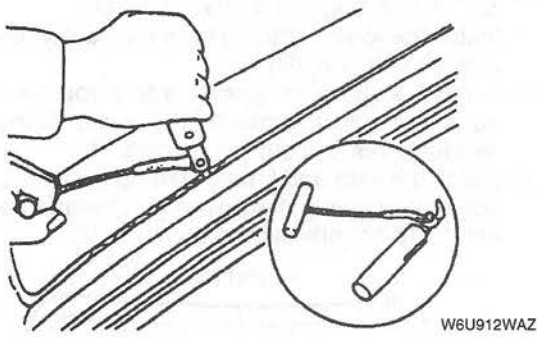

10. Remove the glass.

Reusing Windshield

1. Remove the rearview mirror. (Refer to 09–12 REARVIEW MIRROR REMOVAL.)
2. Remove the A-pillar trim. (Refer to 09–17 A-PILLAR TRIM REMOVAL/INSTALLATION.)
3. Remove the cowl grille. (Refer to 09–16 COWL GRILLE REMOVAL/INSTALLATION.)
4. Remove the windshield molding. (Refer to 09–16 WINDSHIELD MOLDING REMOVAL.)
5. Apply protective tape along the edge of the body to protect it from damage.
6. Remove the sunvisor, and apply protective tape along the edge of the headliner to protect it from damage.

7. Apply protective tape to the dashboard to protect it from damage.
8. Make a hole through the sealant from the inside of the vehicle by using an awl.
9. Pass the **SST** (piano wire) through the hole.

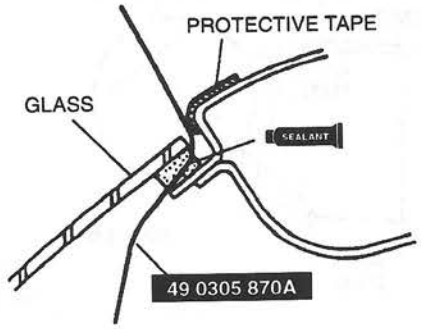

W6U912WB0

10. Wind each end of the wire around a bar.

Note
- Use the entire length of piano wire to prevent it from breaking when cutting through the sealant.

11. Working with another person, saw through the sealant around the edge of the glass, being careful to not damage the vehicle body or the dashboard.

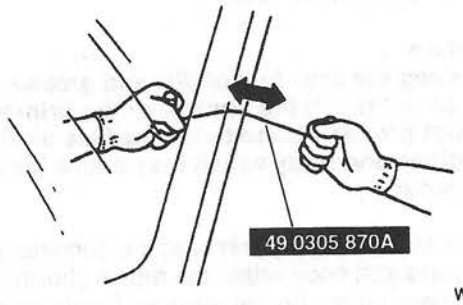

W6U912WB1

12. Remove the windshield.
13. Remove the spacers and dam.

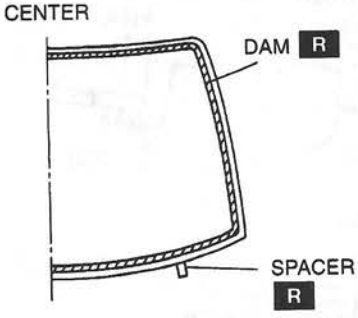

W6U912WB2

WINDSHIELD INSTALLATION

W6U912W18

Caution
- **To prevent the sealant from cracking or the glass from being pushed out by air pressure if a door is closed, open all of the windows and leave them open until the sealant has hardened.**

1. Cut away the old sealant by using a razor knife so that **1—2 mm {0.04—0.07 in}** thickness of a sealant remains around the circumference of the frame. If all the sealant has come off in any one place, apply some primer after degreasing, and allow it **30 minutes** to dry. Then put on new sealant to create a **2 mm {0.08 in}** layer.

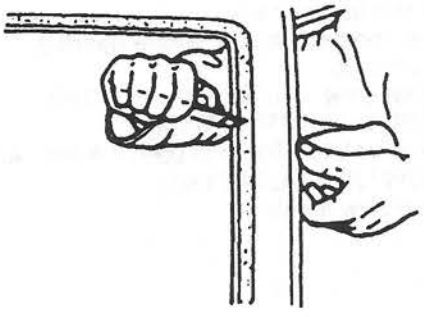

W6U912WB3

2. Clean and degrease an **approximately 50 mm {2.0 in}** wide strip around the circumference of the glass and the bonding area on the body.
3. Securely bond a dam along the circumference of the glass **8 mm {0.3 in}**.

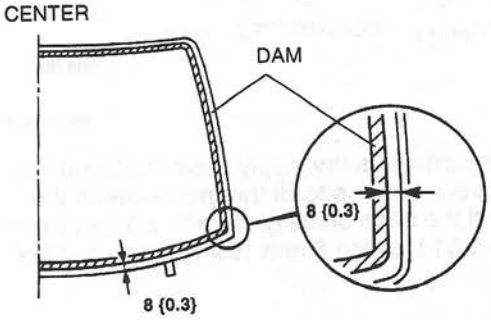

W6U912WB4

4. Install spacers into the holes.
5. Temporarily install the glass onto the body and adjust the glass-to-body clearance.
6. Make a mark on the glass directly above the V-notch of spacers.
7. Verify that the gap along the upper and sides are **7.3 mm {0.29 in}**.

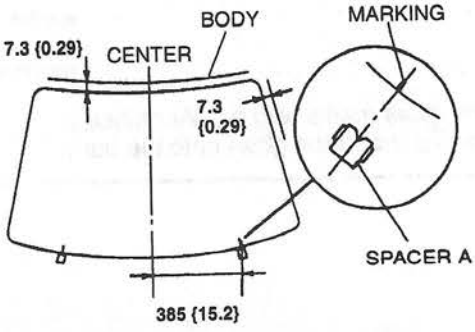

W6U912WB6

8. Remove the windshield.

Caution
- **Keep the area free of dirt and grease, and do not touch the surface or the primer may not properly bond to the surface of the glass and body which may cause leaks to occur.**

9. Use a brush to apply primer to the bonding area of the glass and body within the region shown. Use only glass primer on the glass and body primer on the body and molding. Allow it to dry for **approximately 30 minutes**.

GLASS AND BODY

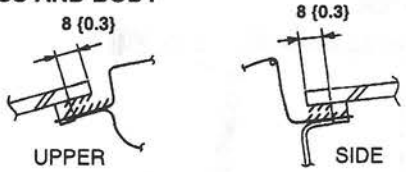

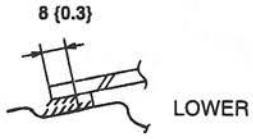

MOLDING



mm {in}

W6U912WB7

10. Once the primer is dry, apply sealant around the entire circumference to fill the gap between the dam and the edge of the glass with a **11—13 mm {0.44—0.51 in}** high **5 mm {0.2 in}** wide bead of sealant.

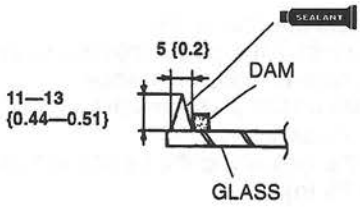

mm {in}

W6U912WB8

11. Align the glass marks with the V-notches in spacers and install the glass onto the body.
12. Press firmly inward on the glass to compress the sealant.
13. Verify that the gap along both the upper and sides are **7.3 mm {0.29 in}**.

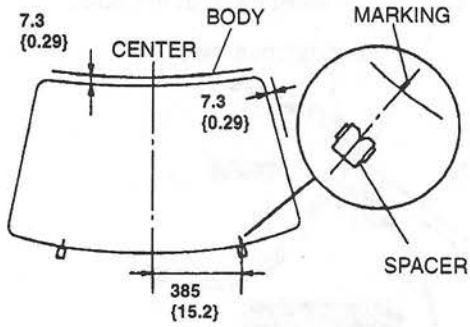

mm {in}

W6U912WB9

14. Use a scraper to smooth away any sealant that oozes out. Add more sealant to any points of poor contact. Adjust the sealant as shown if necessary.

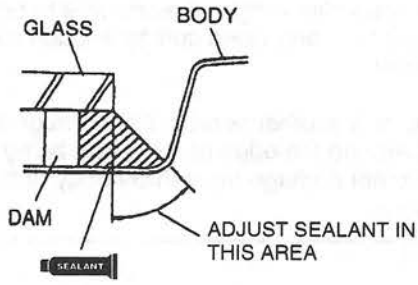

W6U912WBA

15. Before the surface of the sealant has hardened, install the windshield molding. (Refer to 09–16 WINDSHIELD MOLDING INSTALLATION.)

Hardening time of sealant

Temperature	Surface hardening time	Time required until car can be put into service
5 °C {41 °F}	Approx. 1.5 h	Approx. 12 h
20 °C {68 °F}	Approx. 1 h	Approx. 4 h
35 °C {95 °F}	Approx. 10 min	Approx. 2 h

16. Use white gasoline to remove any sealant that oozes out.
17. Check for water leaks. If a leak is found, wipe the water off well and add sealant where needed.
18. Install the sunvisor.
19. Install the cowl grille. (Refer to 09–16 COWL GRILLE REMOVAL/INSTALLATION.)
20. Install the A-pillar trim. (Refer to 09–17 A-PILLAR TRIM REMOVAL/INSTALLATION.)
21. Install the rearview mirror.

FILAMENT INSPECTION

W6U912W19

1. Turn the ignition switch to ON.
2. Turn the rear window defroster switch on.

Caution
- **Directly touching the rear defroster filament with the lead of the circuit tester will damage it. Wrap aluminum foil around the end of the lead and test the filament by touching it with the foil.**

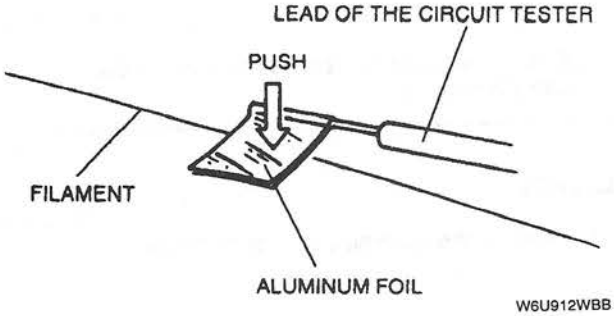

W6U912WBB

3. Connect the positive (+) lead of the voltmeter to the positive side of each filament and the negative (–) lead to ground.
4. Gradually slide the positive (+) lead from the positive side to the negative side and measure the voltage. Verify that the voltage decrease accordingly.

Measurement place	Voltage (Reference value)
A→B	Approx. 12 V→Approx. 0 V

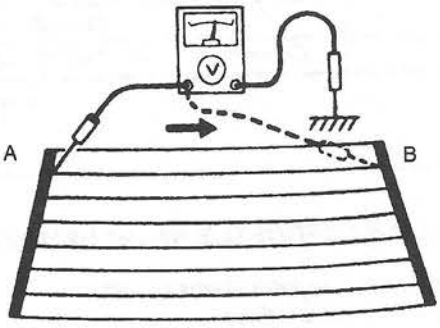

W6U912WBC

5. If the voltage is not as specified or it changes rapidly, the filament is faulty. Repair the filament.

FILAMENT REPAIR

W6U912W20

1. Use white gasoline to clean around the damaged section of the filament.
2. Attach tape above and below the damaged section of the filament.

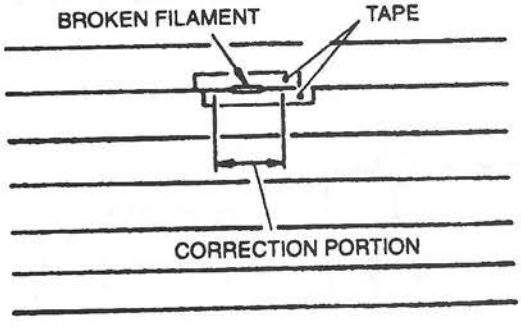

W6U912WBD

3. Using a small brush or marking pen, repair the filament with silver paint or equivalent.
4. After **approximately 2—3 minutes**, carefully remove the tape without disturbing the repaired area.

Caution
- **Do not use the rear window defroster until the paint is completely dry. It may cause other malfunctions if it is used before the paint is dry.**

5. Use a hot air blower heated to **150 °C {302 °F}** for **30 minutes** or let the paint set for **24 hours** at **25 °C {77 °F}** to allow it to dry completely.

REAR WINDOW DEFROSTER SWITCH REMOVAL/INSTALLATION

W6U912W21

1. Disconnect the negative battery cable.
2. Remove the meter hood. (Refer to 09–17 METER HOOD REMOVAL/INSTALLATION.)
3. Press the hooks of the rear window defroster switch and pull the switch out.

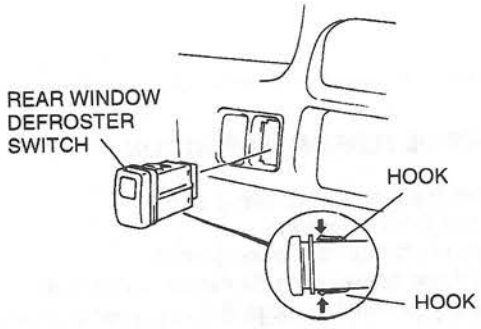

W6U912WBE

4. Install in the reverse order of removal.

REAR WINDOW DEFROSTER SWITCH INSPECTION

W6U912W22

1. Remove the rear window defroster switch. (Refer to 09–12 REAR WINDOW DEFROSTER SWITCH REMOVAL/INSTALLATION.)
2. Inspect for continuity between the rear window defroster switch terminals by using an ohmmeter.

○—○ : Continuity ○—⊘—○ : Bulb

Switch position	Terminal			
	B	C	E	F
Off			○—⊘—○	
On	○—○		○—⊘—○	

W6U912WBF

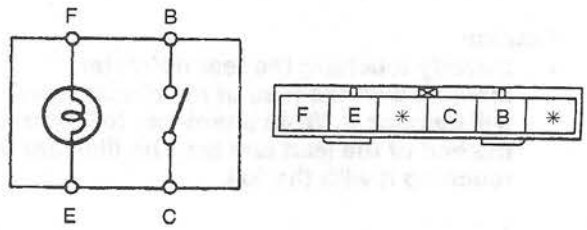

W6U912WBG

3. If not as specified, replace the rear window defroster switch.

REAR WINDOW DEFROSTER RELAY REMOVAL/INSTALLATION

W6U912W23

1. Disconnect the negative battery cable.
2. Remove the rear window defroster relay.

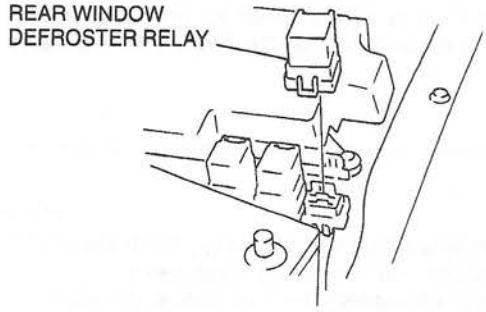

W6U912WBH

3. Install in the reverse order of removal.

REAR WINDOW DEFROSTER RELAY INSPECTION

W6U912W24

1. Remove the rear window defroster relay.
2. Inspect for continuity between the rear window defroster relay terminals by using an ohmmeter.

○—○ : Continuity

Step	Terminal			
	A	B	E	F
1	○			○
2	B+	○	○	GND

W6U912WBJ

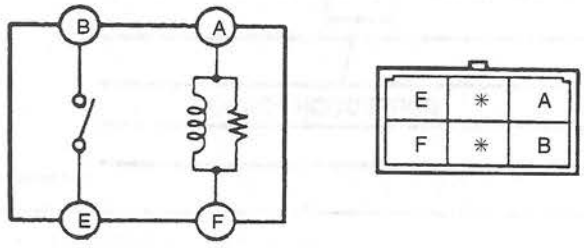

W6U912WBK

3. If not as specified, replace the rear window defroster relay.

POWER OUTSIDE MIRROR INSPECTION

W6U912W25

1. Disconnect the negative battery cable.
2. Remove the front door trim.
3. Partially peel off the front door screen.
4. Disconnect the power outside mirror connector.
5. Apply battery positive voltage to the power outside mirror terminals and check the operation of the power outside mirror.

Connection		Mirror operation
B+	GND	
D	A	Up
A	D	Down
A	C	Left
C	A	Right

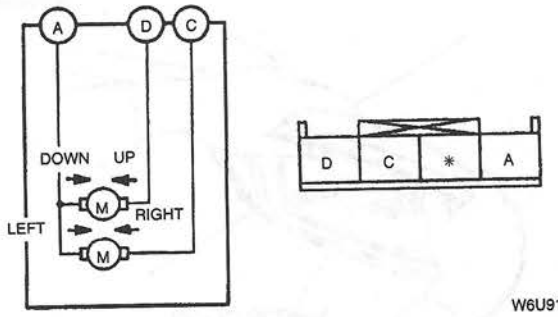

W6U912WBL

6. If not as specified, replace the power outside mirror.

POWER OUTSIDE MIRROR REMOVAL/INSTALLATION

W6U912W26

1. Disconnect the negative battery cable.
2. Remove the inner garnish.
3. Remove the front door trim. (Refer to 09–17 FRONT DOOR TRIM REMOVAL/INSTALLATION.)
4. Partially peel off the door screen.
5. Disconnect the connector.
6. Remove the nuts and the power outside mirror.

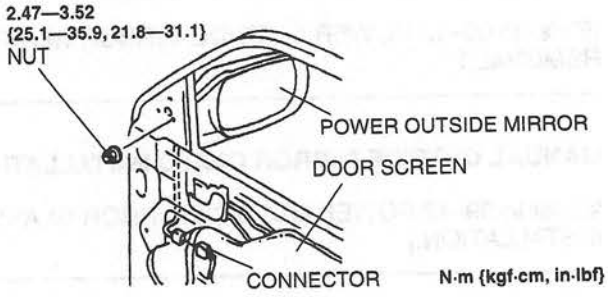

W6U912WBM

7. Install in the reverse order of removal.

MANUAL OUTSIDE MIRROR REMOVAL/INSTALLATION

W6U912W27

1. Remove the inner garnish.
2. Remove the nuts and the manual outside mirror.

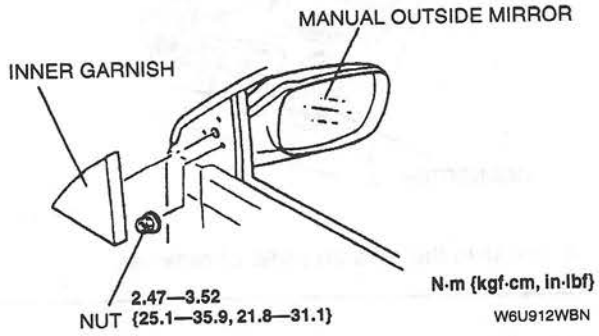

W6U912WBN

3. Install in the reverse order of removal.

POWER OUTSIDE MIRROR GLASS REMOVAL

W6U912W28

1. Warm the frame and the mirror glass to **approximately 70 °C {158 °F}** for **3 minutes** by using a hot air blower.
2. Put on gloves and protective eye wear.
3. Insert a scraper between the mirror glass and the frame, and pry the glass loose.

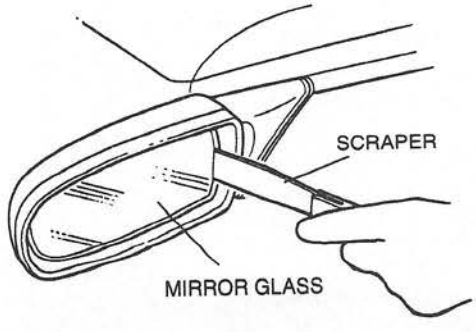

W6U912WBP

POWER OUTSIDE MIRROR GLASS INSTALLATION

W6U912W29

1. Clean and degrease the adhesion surface of the mirror glass.
2. Warm up the frame and the mirror glass by using a hot air blower.
3. Remove the paper backing from the double-sided adhesive tape on the back side of the mirror glass.
4. Insert the mirror glass into the frame, then press lightly on the glass to secure it.

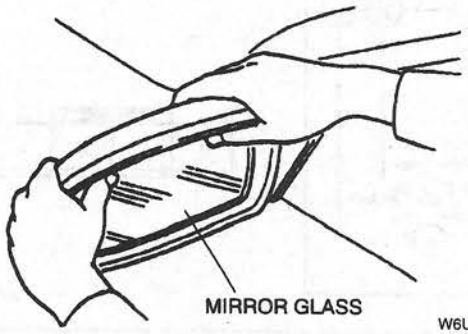

W6U912WBQ

MANUAL OUTSIDE MIRROR GLASS REMOVAL

W6U912W30

(Refer to 09–12 POWER OUTSIDE MIRROR GLASS REMOVAL.)

MANUAL OUTSIDE MIRROR GLASS INSTALLATION

W6U912W31

(Refer to 09–12 POWER OUTSIDE MIRROR GLASS INSTALLATION.)

POWER OUTSIDE MIRROR SWITCH REMOVAL/INSTALLATION

W6U912W32

1. Disconnect the negative battery cable.
2. Insert a tape-wrapped, flathead screwdriver between the power outside mirror switch and the meter hood.

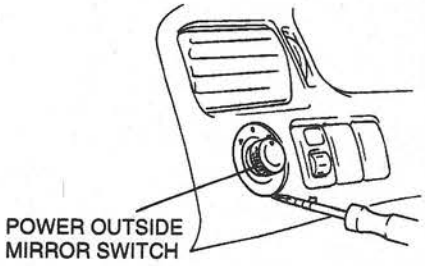

W6U912WBR

3. Disconnect the connector and remove the power outside mirror switch.

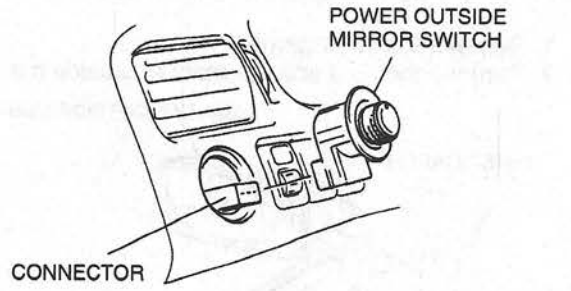

W6U912WBS

4. Install in the reverse order of removal.

POWER OUTSIDE MIRROR SWITCH INSPECTION

W6U912W33

1. Remove the power outside mirror switch.
2. Inspect for continuity between the power outside mirror switch terminals by using an ohmmeter.

○—○ : Continuity

Switch position		Terminal						
		H	G	F	E	D	C	B
Left side	Up	○		○	○		○	
	Down	○		○	○		○	
	Left			○	○		○	○
	Right			○	○		○	○
Right side	Up		○	○	○		○	
	Down		○	○	○		○	
	Left			○	○	○	○	
	Right			○	○	○	○	

W6U912WBT

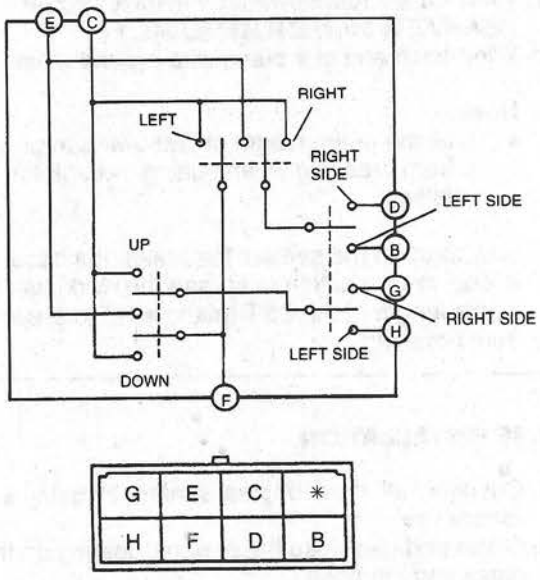

W6U912WBU

3. If not as specified, replace the power outside mirror switch.

REARVIEW MIRROR REMOVAL

W6U912W34

1. Insert a flathead screwdriver between the mirror and the base.
2. Push the base pin to remove the rearview mirror.

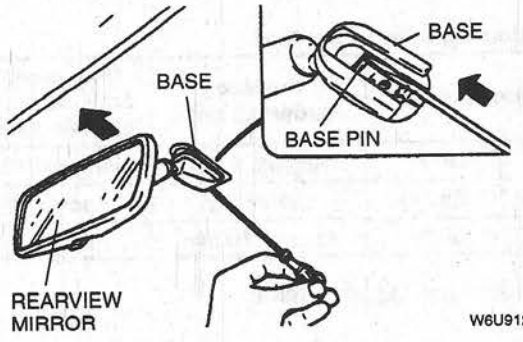

W6U912WBV

REARVIEW MIRROR INSTALLATION

W6U912W35

- Install the rearview mirror onto the base.

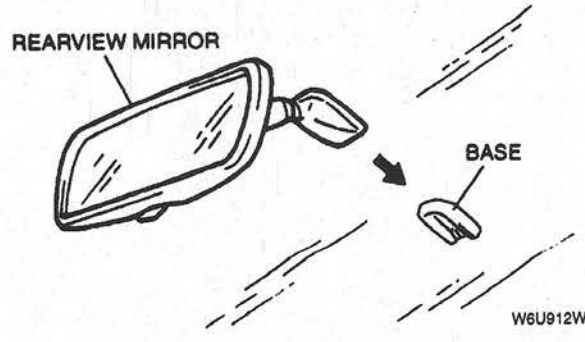

W6U912WBW

BASE REMOVAL

1. Remove the rearview mirror. (Refer to 09–12 REARVIEW MIRROR REMOVAL.)
2. Wind each end of a piano wire around a bar.

Note
- Use the entire length of piano wire to prevent it from breaking when cutting through the sealant.

3. Saw through the sealant to remove the base. Use a long sawing action to spread the work over the whole length of the **SST** (piano wire) to prevent it from breaking.

W6U912W36



W6U912WBX

BASE INSTALLATION

1. Cut away all of the original sealant by using a razor knife.
2. Clean and degrease the ceramic coating on the glass and the base.

Caution
- **Keep the area free of dirt and grease, and do not touch the surface or the primer may not properly bond to the surface of the glass.**

3. Apply primer to the glass and the base. Use only glass primer on the glass and body primer on the base. Allow the primer to dry for **approximately 30 minutes**.
4. Apply a **3 mm {0.1 in}** bead of sealant to the base.

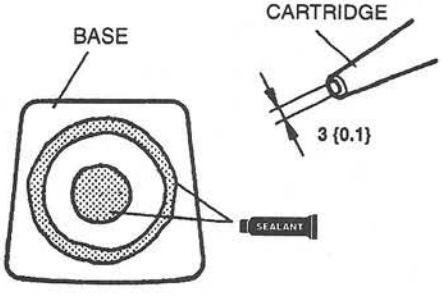

mm {in}

W6U912WBY

W6U912W37

5. Center the base in the ceramic coating and press it onto the glass.

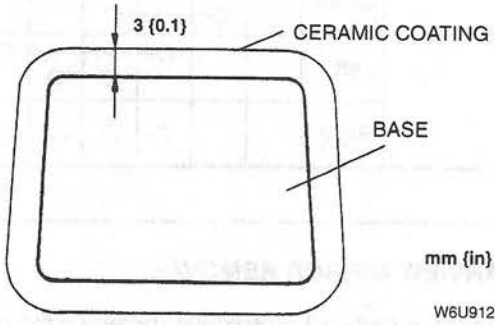

mm {in}

W6U912WBZ

6. Use white gasoline to remove any excessive sealant.

Hardening time of sealant

Temperature	Surface hardening time	Time required until car can be put into service
5 °C {41 °F}	Approx. 1.5 h	Approx. 12 h
20 °C {68 °F}	Approx. 1 h	Approx. 4 h
35 °C {95 °F}	Approx. 10 min	Approx. 2 h

7. Install the rearview mirror.

09–13 SEATS

FRONT SEAT
REMOVAL/INSTALLATION 09–13–1
FRONT SEAT
DISASSEMBLY/ASSEMBLY 09–13–2
Power Seat 09–13–2
Manual Seat 09–13–3
REAR SEAT
REMOVAL/INSTALLATION 09–13–4
REAR SEAT
DISASSEMBLY/ASSEMBLY 09–13–5
SLIDE MOTOR INSPECTION 09–13–5
FRONT TILT MOTOR INSPECTION 09–13–6
REAR TILT MOTOR INSPECTION 09–13–6
POWER SEAT SWITCH INSPECTION . 09–13–6

FRONT SEAT REMOVAL/INSTALLATION

W6U913W01

1. Disconnect the negative battery cable.
2. Remove in the order indicated in the table.
3. Install in the reverse order of removal.

1	Connector
2	Bolt
3	Nut
4	Front seat

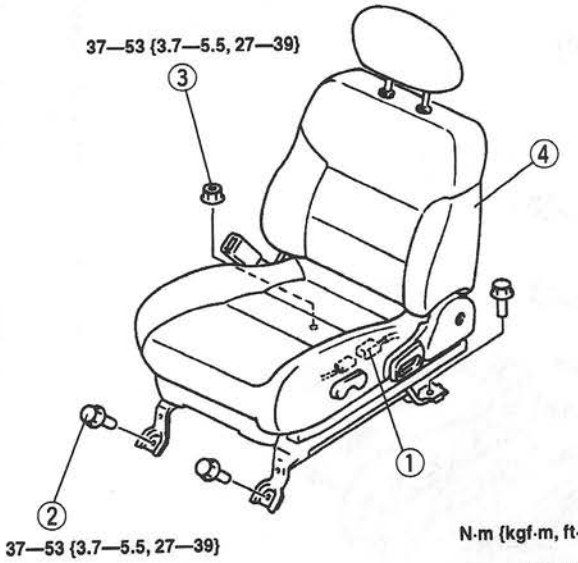

N·m {kgf·m, ft·lbf}

W6U913WA0

FRONT SEAT DISASSEMBLY/ASSEMBLY

W6U913W02

Power Seat

1. Disassemble in the order indicated in the table.
2. Assemble in the reverse order of disassembly.

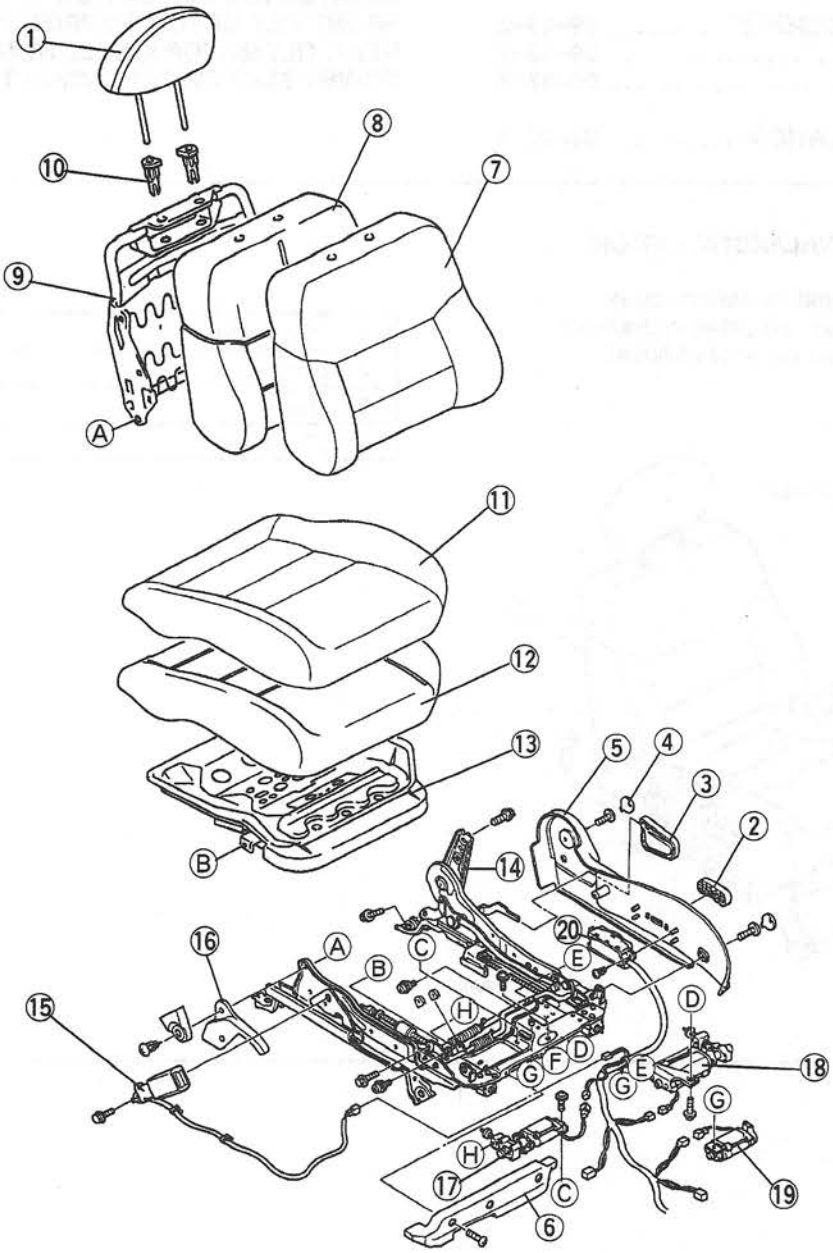

W6U913WA1

1	Headrest
2	Power seat switch knob
3	Recliner lever
4	Cap
5	Knuckle cover
6	Front cover
7	Seat back trim
8	Seat back pad
9	Seat back frame
10	Pole guide

11	Seat cushion trim
12	Seat cushion pad
13	Seat cushion frame
14	Slide adjuster
15	Buckle
16	Cover
17	Front tilt motor
18	Rear tilt motor
19	Slide motor
20	Power seat switch

Manual Seat

1. Disassemble in the order indicated in the table.
2. Assemble in the reverse order of disassembly.

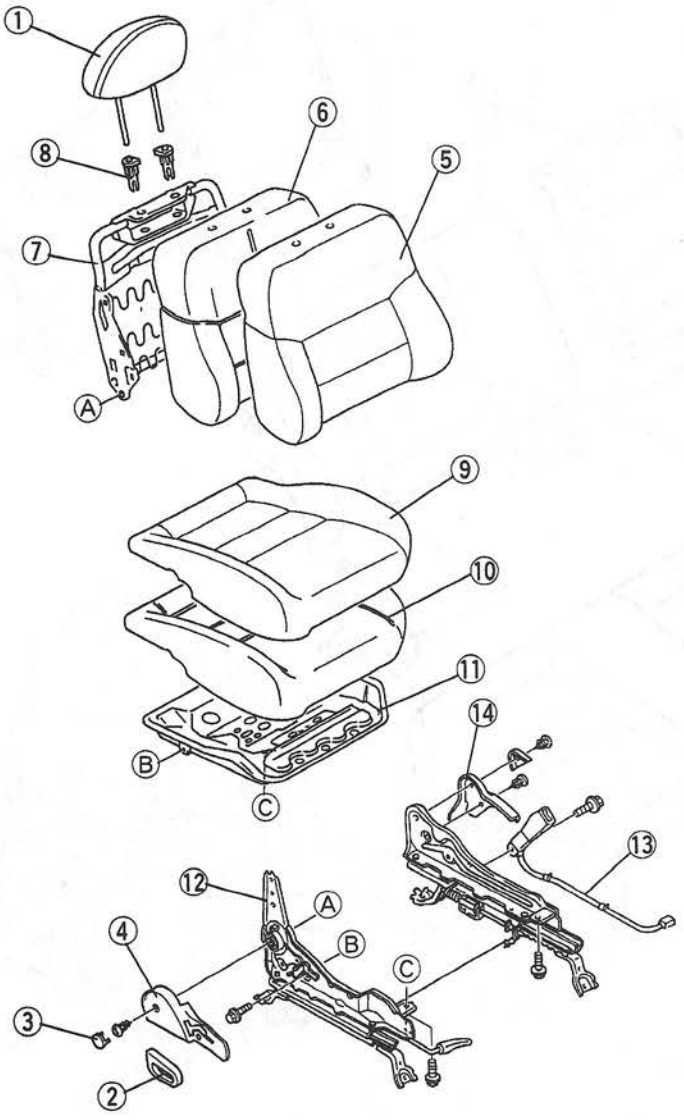

W6U913WA2

1	Headrest
2	Recliner lever
3	Cap
4	Knuckle cover
5	Seat back trim
6	Seat back pad
7	Seat back frame

8	Pole guide
9	Seat cushion trim
10	Seat cushion pad
11	Seat cushion frame
12	Slide adjuster
13	Buckle
14	Cover

REAR SEAT REMOVAL/INSTALLATION

W6U913W03

1. Remove in the order indicated in the table.
2. Install in the reverse order of removal.

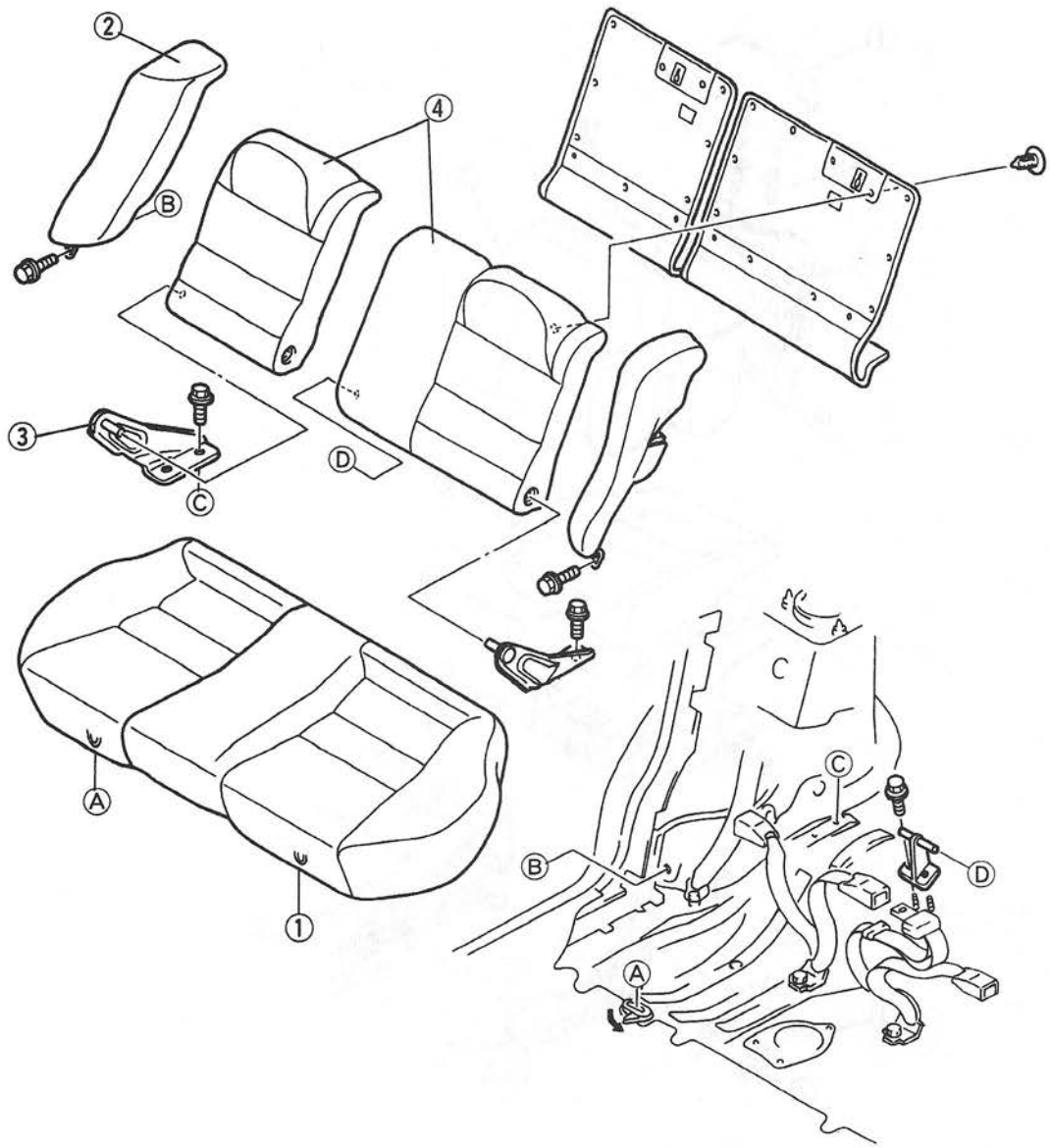

W6U913WA3

1	Rear seat cushion
2	Rear side seat

3	Rear seat back hinge
4	Rear seat back

REAR SEAT DISASSEMBLY/ASSEMBLY

W6U913W04

1. Disassemble in the order indicated in the table.
2. Assemble in the reverse order of disassembly.

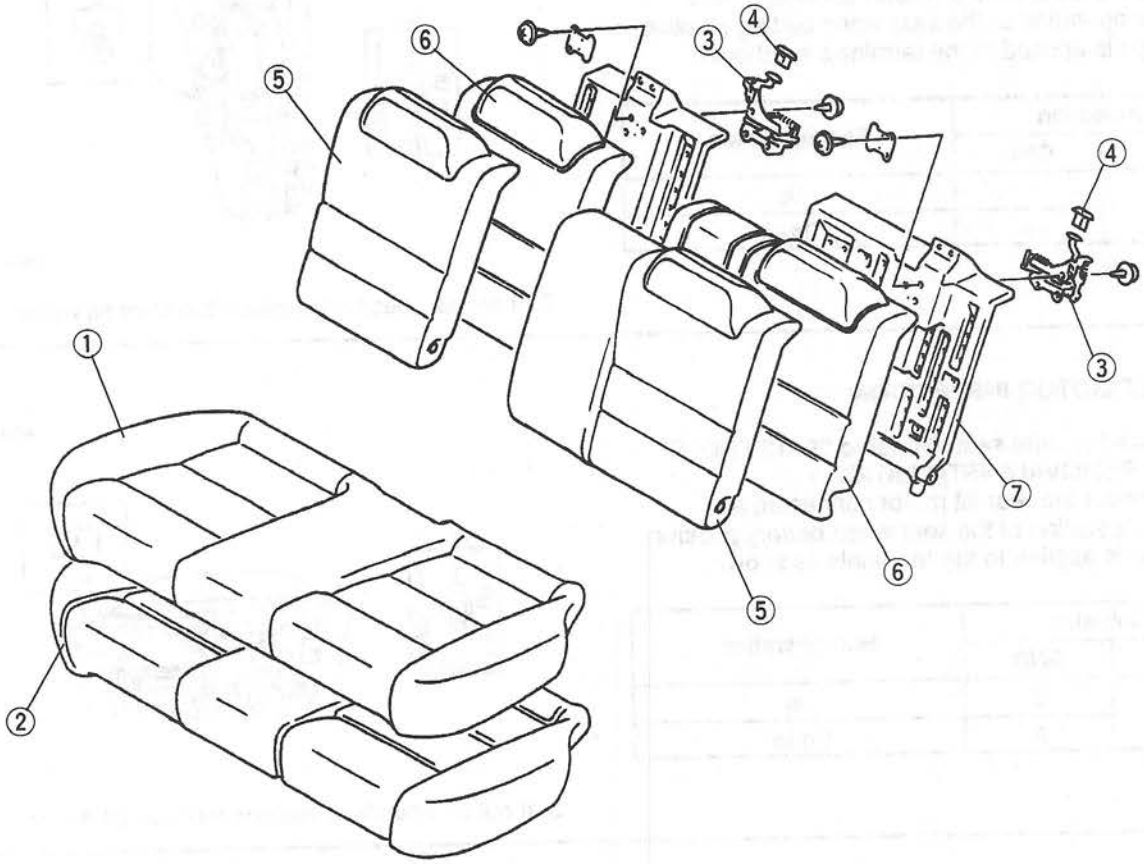

W6U913WA4

1	Rear seat cushion trim
2	Rear seat cushion pad
3	Rear seat back catch lock
4	Rear seat back catch knob

5	Rear seat back trim
6	Rear seat back pad
7	Rear seat back frame

SLIDE MOTOR INSPECTION

W6U913W05

1. Remove the front seat. (Refer to 09–13 FRONT SEAT REMOVAL/INSTALLATION.)
2. Disconnect the slide motor connector, and check operation of the seat when battery positive voltage is applied to the terminals as shown.

Connection		Seat operation
B+	GND	
B	A	Forward
A	B	Backward

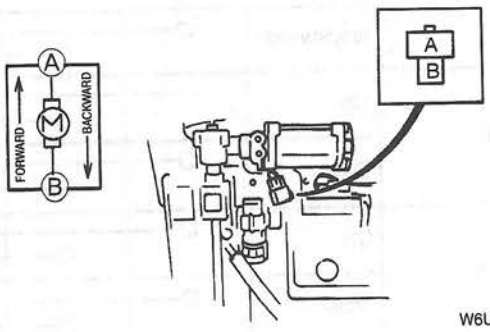

W6U913WA5

3. If not as specified, replace the slide motor.

FRONT TILT MOTOR INSPECTION

W6U913W06

1. Remove the front seat. (Refer to 09–13 FRONT SEAT REMOVAL/INSTALLATION.)
2. Disconnect the front tilt motor connector, and check operation of the seat when battery positive voltage is applied to the terminals as shown.

Connection		Seat operation
B+	GND	
A	B	Up
B	A	Down

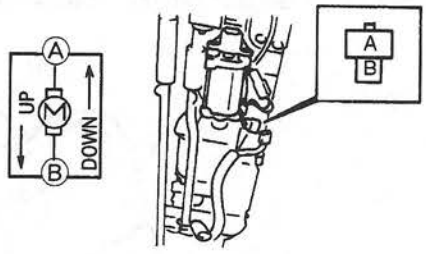

W6U913WA6

3. If not as specified, replace the front tilt motor.

REAR TILT MOTOR INSPECTION

W6U913W07

1. Remove the front seat. (Refer to 09–13 FRONT SEAT REMOVAL/INSTALLATION.)
2. Disconnect the rear tilt motor connector, and check operation of the seat when battery positive voltage is applied to the terminals as shown.

Connection		Seat operation
B+	GND	
A	B	Up
B	A	Down

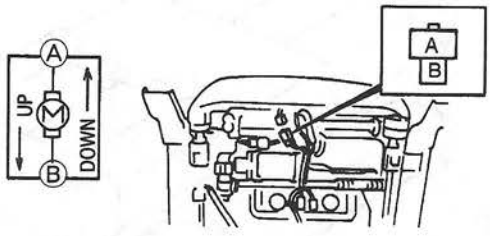

W6U913WA7

3. If not as specified, replace the rear tilt motor.

POWER SEAT SWITCH INSPECTION

W6U913W08

1. Remove the front seat. (Refer to 09–13 FRONT SEAT REMOVAL/INSTALLATION.)
2. Disconnect the power seat switch connectors.
3. Check for continuity between the power seat switch terminals by using an ohmmeter.

O—O : Continuity

Switch condition		Terminal							
		1A	1B	2A	2B	3A	3B	4A	4B
Slide	Forward	O	O	O	O				
	Backward	O	O	O	O				
Front tilt	Up	O	O			O	O		
	Down	O	O			O	O		
Rear tilt	Up	O	O					O	O
	Down	O	O					O	O
Front/rear lifter	Up	O	O			O	O	O	O
	Down	O	O			O	O	O	O

W6U913WA8

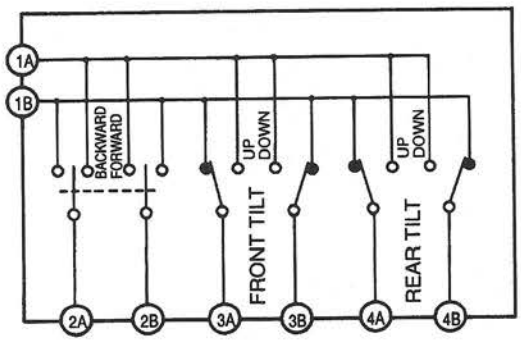

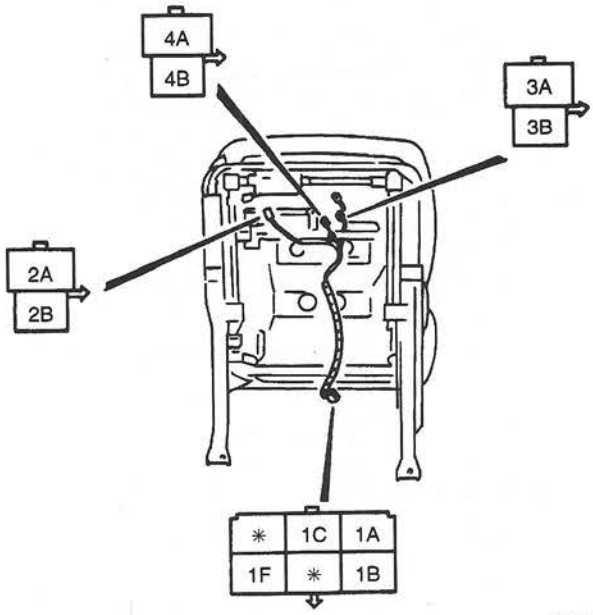

W6U913WA9

4. If not as specified, replace the power seat switch.

09–14 SECURITY AND LOCKS

FRONT DOOR LOCK AND OPENER REMOVAL/INSTALLATION 09–14–2
FRONT DOOR LOCK ACTUATOR INSPECTION 09–14–2
FRONT DOOR LOCK STRIKER ADJUSTMENT 09–14–3
FRONT DOOR LOCK STRIKER REMOVAL/INSTALLATION 09–14–3
REAR DOOR LOCK AND OPENER REMOVAL/INSTALLATION 09–14–4
REAR DOOR LOCK ACTUATOR INSPECTION 09–14–4
REAR DOOR LOCK STRIKER ADJUSTMENT 09–14–5
REAR DOOR LOCK STRIKER REMOVAL/INSTALLATION 09–14–5
DOOR LOCK SWITCH REMOVAL/INSTALLATION 09–14–5
DOOR LOCK SWITCH INSPECTION ... 09–14–6
DOOR LOCK TIMER UNIT 1 REMOVAL/INSTALLATION 09–14–6
DOOR LOCK TIMER UNIT 2 REMOVAL/INSTALLATION 09–14–7
DOOR LOCK TIMER UNIT 1 INSPECTION 09–14–7
Terminal Voltage List (Reference) 09–14–7
DOOR LOCK TIMER UNIT 2 INSPECTION 09–14–8
Terminal Voltage List (Reference) 09–14–8
HOOD LOCK AND OPENER REMOVAL/INSTALLATION 09–14–9
HOOD LOCK ADJUSTMENT 09–14–9
TRANSMITTER DISASSEMBLY/ASSEMBLY 09–14–10
TRANSMITTER INSPECTION 09–14–10
KEYLESS UNIT INSPECTION 09–14–11
Terminal Voltage List (Reference) 09–14–11
KEYLESS UNIT REMOVAL/INSTALLATION 09–14–11
TRANSMITTER ID CODE CHANGE 09–14–12
HOOD SWITCH INSPECTION 09–14–13
TRUNK KEY CYLINDER SWITCH INSPECTION 09–14–13
TRUNK LID LOCK AND OPENER REMOVAL/INSTALLATION 09–14–13
TRUNK LID LOCK ACTUATOR INSPECTION 09–14–14
TRUNK LID OPENER SWITCH REMOVAL/INSTALLATION 09–14–14
TRUNK LID OPENER SWITCH INSPECTION 09–14–14
TRUNK LID STRIKER ADJUSTMENT .. 09–14–15
TRUNK LID STRIKER REMOVAL/INSTALLATION 09–14–15
IMMOBILIZER SYSTEM SERVICE CAUTION 09–14–15
IMMOBILIZER UNIT REMOVAL/INSTALLATION 09–14–16
IMMOBILIZER UNIT INSPECTION 09–14–16
Terminal Voltage List (Reference) 09–14–16
COIL REMOVAL/INSTALLATION 09–14–17
Coil Installation Note 09–14–17
IMMOBILIZER SYSTEM REPROGRAM PROCEDURE 09–14–17
Key Replacement or Addition 09–14–18
Steering Lock Replacement 09–14–19
Immobilizer Unit Replacement 09–14–20
PCM Replacement 09–14–21
Both Immobilizer Unit and PCM Replacement 09–14–22
CODE WORD INPUT PROCEDURE ... 09–14–23
Examples of Incorrect Input of Code Word 09–14–23
Code Word Input Error Recovery Procedure 09–14–24

FRONT DOOR LOCK AND OPENER REMOVAL/INSTALLATION

W6U914W01

1. Raise the front door glass fully.
2. Disconnect the negative battery cable.
3. Remove the front door trim. (Refer to 09–17 FRONT DOOR TRIM REMOVAL/INSTALLATION.)
4. Remove in the order indicated in the table.
5. Install in the reverse order of removal.

1	Bracket
2	Inner handle
3	Front door screen
4	Front door lock
5	Front lock link
6	Outer handle
7	Door key cylinder

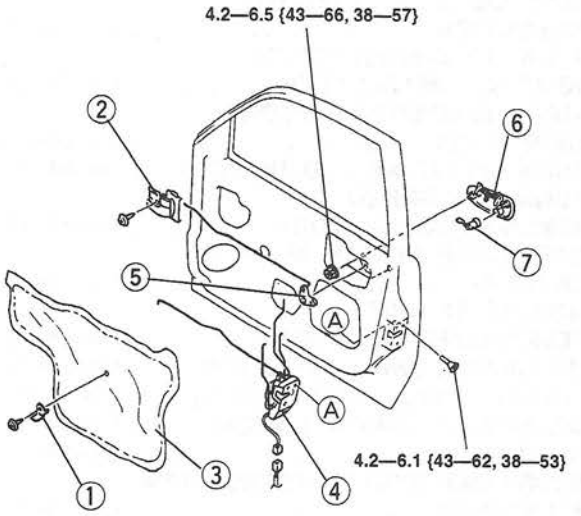

N·m {kgf·cm, in·lbf}

W6U914WA0

FRONT DOOR LOCK ACTUATOR INSPECTION

W6U914W02

Note

- The front door lock actuator is built in the front door lock.

1. Disconnect the negative battery cable.
2. Remove the front door trim. (Refer to 09–17 FRONT DOOR TRIM REMOVAL/INSTALLATION.)
3. Partially peel off the front door screen.
4. Disconnect the front door lock actuator connector.
5. Apply battery positive voltage to the front door lock actuator terminals and check the operation of the front door lock actuator.

Connection		Actuator operation
B+	GND	
B	A	Lock
A	B	Unlock

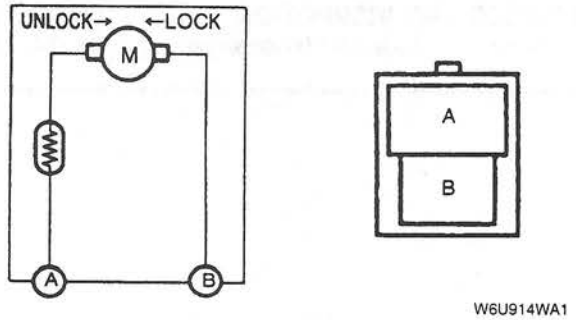

W6U914WA1

6. If not as specified, replace the front door lock.

FRONT DOOR LOCK STRIKER ADJUSTMENT

W6U914W03

1. Verify that the front door can be closed easily and that there is no looseness.
2. If not correct, loosen the front door lock striker installation screws and move the striker horizontally or vertically.

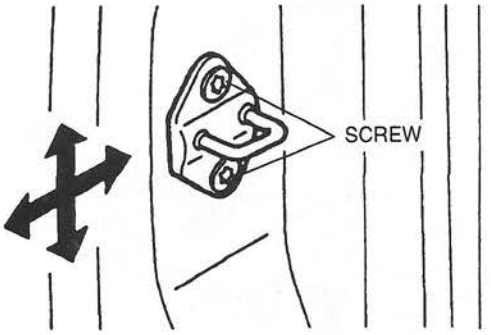

W6U914WA2

3. Tighten the front door lock striker installation screws.

FRONT DOOR LOCK STRIKER REMOVAL/INSTALLATION

W6U914W04

1. Remove the screws.
2. Remove the front door lock striker.

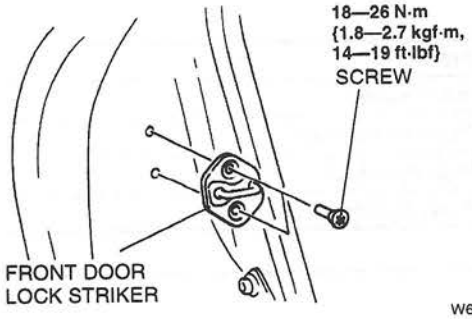

W6U914WA3

3. Install in the reverse order of removal.
4. Adjust the front door lock striker. (Refer to 09–14 FRONT DOOR LOCK STRIKER ADJUSTMENT.)

REAR DOOR LOCK AND OPENER REMOVAL/INSTALLATION

W6U914W05

1. Raise the rear door glass fully.
2. Disconnect the negative battery cable.
3. Remove the rear door trim. (Refer to 09–17 REAR DOOR TRIM REMOVAL/INSTALLATION.)
4. To remove the rear door lock, remove the rear door glass guide. (Refer to 09–12 REAR DOOR GLASS AND GUIDE REMOVAL/INSTALLATION.)
5. Remove in the order indicated in the table.
6. Install in the reverse order of removal.

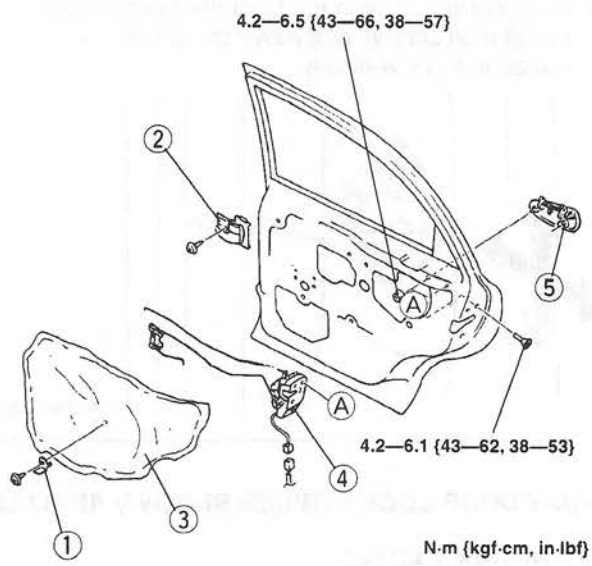

W6U914WA4

1	Bracket
2	Inner handle
3	Rear door screen
4	Rear door lock
5	Outer handle

REAR DOOR LOCK ACTUATOR INSPECTION

W6U914W06

Note
- The rear door lock actuator is built in the rear door lock.

1. Disconnect the negative battery cable.
2. Remove the rear door trim. (Refer to 09–17 REAR DOOR TRIM REMOVAL/INSTALLATION.)
3. Partially peel off the rear door screen.
4. Disconnect the rear door lock actuator connector.
5. Apply battery positive voltage to the rear door lock actuator terminals and check the operation of the rear door lock actuator.

Connection		Actuator operation
B+	GND	
B	A	Lock
A	B	Unlock

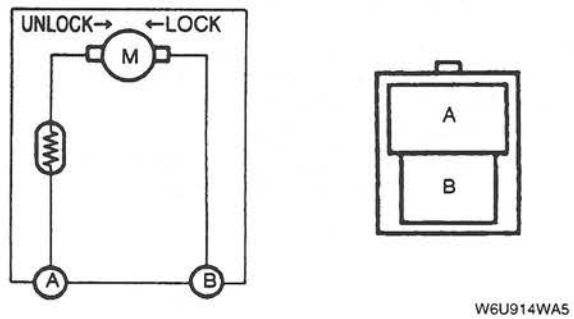

W6U914WA5

6. If not as specified, replace the rear door lock.

REAR DOOR LOCK STRIKER ADJUSTMENT

W6U914W07

1. Verify that the rear door can be closed easily and that there is no looseness.
2. If not correct, loosen the rear door lock striker installation screws and move the striker horizontally or vertically.
3. Tighten the rear door lock striker installation screws.

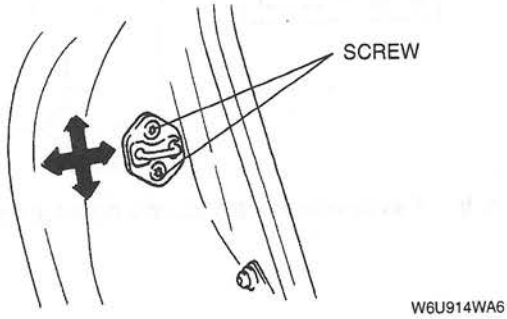

W6U914WA6

REAR DOOR LOCK STRIKER REMOVAL/INSTALLATION

W6U914W08

1. Remove the screws.
2. Remove the rear door lock striker.
3. Install in the reverse order of removal.
4. Adjust the rear door lock striker. (Refer to 09–14 REAR DOOR LOCK STRIKER ADJUSTMENT.)

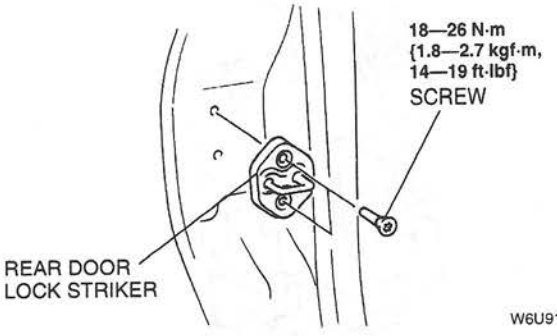

W6U914WA7

DOOR LOCK SWITCH REMOVAL/INSTALLATION

W6U914W09

1. Disconnect the negative battery cable.
2. Remove the driver's side front door trim. (Refer to 09–17 FRONT DOOR TRIM REMOVAL/INSTALLATION.)
3. Remove in the order indicated in the table.
4. Install in the reverse order of removal.

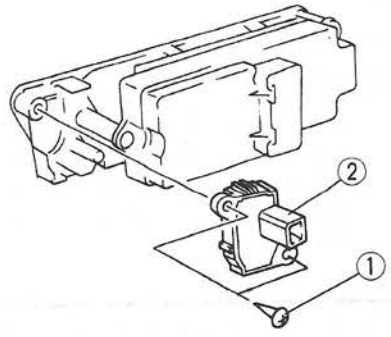

W6U914WA8

1	Screw
2	Door lock switch

DOOR LOCK SWITCH INSPECTION

1. Disconnect the negative battery cable.
2. Remove the driver's side front door trim. (Refer to 09–17 FRONT DOOR TRIM REMOVAL/INSTALLATION.)
3. Check for continuity between the door lock switch terminals by using an ohmmeter.

O—O : Continuity O-WW-O : Resistance

Switch position	Terminal	
	A	B
Lock	O—WW—O	R
Neutral		
Unlock	O	O

R: 950—1050 Ω

W6U914WBK

W6U914W10

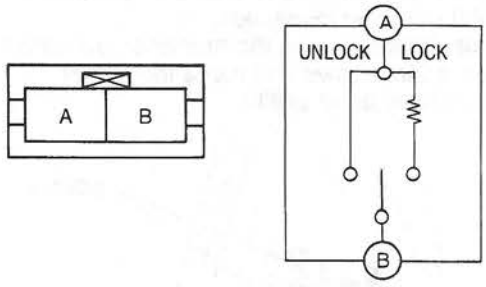

W6U914WA9

4. If not as specified, replace the door lock switch.

DOOR LOCK TIMER UNIT 1 REMOVAL/INSTALLATION

1. Disconnect the negative battery cable.
2. Remove in the order indicated in the table.
3. Install in the reverse order of removal.

W6U914W11

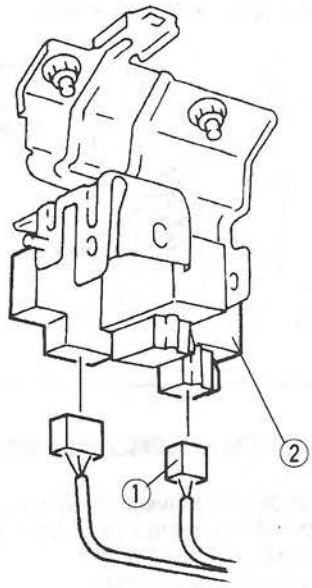

W6U914WAA

1	Connector
2	Door lock timer unit 1

DOOR LOCK TIMER UNIT 2 REMOVAL/INSTALLATION

W6U914W12

1. Disconnect the negative battery cable.
2. Remove in the order indicated in the table.
3. Install in the reverse order of removal.

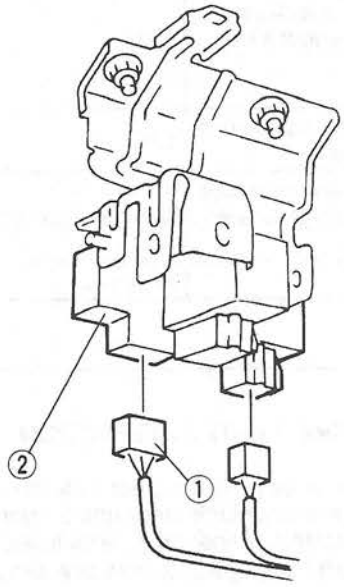

W6U914WAB

1	Connector
2	Door lock timer unit 2

DOOR LOCK TIMER UNIT 1 INSPECTION

W6U914W13

1. Measure the voltage at the door lock timer unit 1 terminals as indicated below.
2. Disconnect the door lock timer unit 1 connector before checking for continuity at terminal F.
3. If not as specified, inspect the parts listed under "Inspection area" and the related wiring harnesses.
4. If the parts and wiring harnesses are okay but the system still does not work properly, replace the door lock timer unit 1.

Terminal Voltage List (Reference)

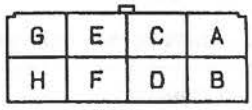

W6U914WAC

Terminal	Signal	Connection	Test condition	Voltage (V)/ Continuity	Inspection area
A	—	Not used	—	—	—
B	Door lock input	CPU	Door lock switch at lock	B+→0→B+	CPU
			Transmitter lock button pressed	B+→0→B+	
			Other	B+	
C	Power supply	D.LOCK 30 A fuse	Constant	B+	D.LOCK 30 A fuse
D	Door lock output	Door lock actuator	Door lock actuator locked	0→B+→0	Door lock actuator
			Other	0	

Terminal	Signal	Connection	Test condition	Voltage (V)/ Continuity	Inspection area
E	Door unlock input (passenger's side, rear)	CPU	Door lock switch at unlock	B+→0→B+	CPU
			Transmitter unlock button pressed twice	B+→0→B+	
			Other	B+	
F	Door lock timer unit 1 ground	GND	Constant: check for continuity to ground	Yes	GND
G	Door unlock output (passenger's side, rear)	Door lock actuator	Door lock actuator unlocked	0→B+→0	Door lock actuator
			Other	0	
H	—	Not used	—	—	—

DOOR LOCK TIMER UNIT 2 INSPECTION

W6U914W14

1. Measure the voltage at the door lock timer unit 2 terminals as indicated below.
2. Disconnect the door lock timer unit 2 connector before checking for continuity at terminal F.
3. If not as specified, inspect the parts listed under "Inspection area" and the related wiring harnesses.
4. If the parts and wiring harnesses are okay but the system still does not work properly, replace the door lock timer unit 2.

Terminal Voltage List (Reference)

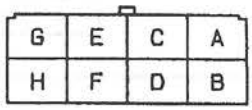

W6U914WAD

Terminal	Signal	Connection	Test condition	Voltage (V)/ Continuity	Inspection area
A	—	Not used	—	—	—
B	Trunk lid unlock input (with keyless entry system only)	• CPU • Trunk lid opener switch	Trunk lid opener switch pressed	B+→0→B+	• CPU • Trunk lid opener switch
			Transmitter trunk button pressed	B+→0→B+	
			Other	B+	
C	+B	D.LOCK 30 A fuse	Constant	B+	D.LOCK 30 A fuse
D	Trunk lid unlock output (with keyless entry system only)	Trunk lid lock actuator	Trunk lid lock actuator operated	0→B+→0	Trunk lid lock actuator
			Other	0	
E	Door unlock input (driver's side)	CPU	Door lock switch at unlock	B+→0→B+	CPU
			Transmitter unlock button pressed twice	B+→0→B+	
			Other	B+	
F	Door lock timer unit 2 ground	GND	Constant: check for continuity to ground	Yes	GND
G	Door unlock output (driver's side)	Door lock actuator	Door lock actuator unlocked	0→B+→0	Door lock actuator
			Other	0	
H	—	Not used	—	—	—

HOOD LOCK AND OPENER REMOVAL/INSTALLATION

W6U914W15

1. Disconnect the negative battery cable.
2. To remove the hood lock, remove the upper seal board.
3. To remove the hood release cable, remove the left side mud guard.
4. Remove in the order indicated in the table.
5. Install in the reverse order of removal.
6. Adjust the hood lock. (Refer to 09–14 HOOD LOCK ADJUSTMENT.)

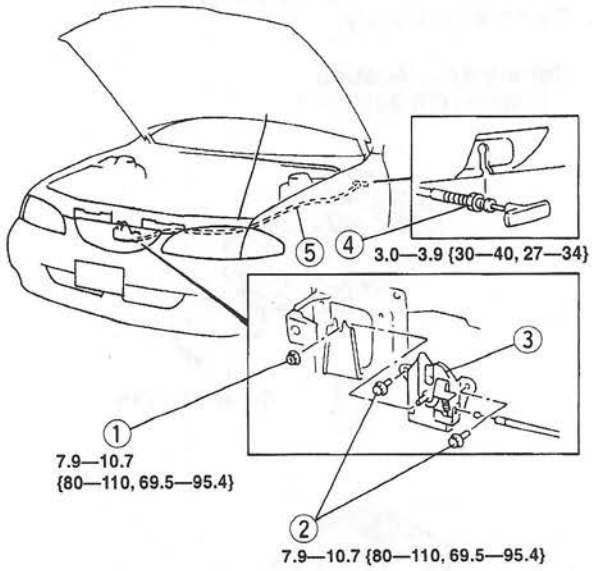

N·m {kgf·cm, in·lbf}

W6U914WAE

1	Nut A
2	Bolt
3	Hood lock
4	Nut B
5	Hood release cable

HOOD LOCK ADJUSTMENT

W6U914W16

1. Verify that the hood can be closed easily and that there is no looseness.
2. If not correct, loosen the hood lock installation bolts and nut, and move the hood lock horizontally or vertically.

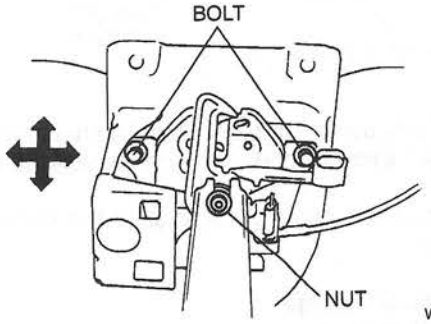

W6U914WAF

3. Tighten the hood lock installation bolts and nut.

TRANSMITTER DISASSEMBLY/ASSEMBLY

W6U914W17

1. Remove the cover by using a quarter coin.
2. Remove the battery.

Battery specification
Lithium CR 2032 × 1

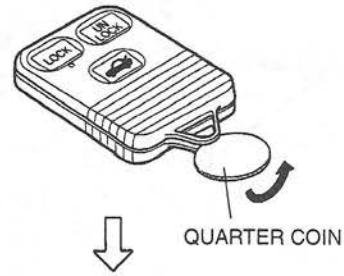

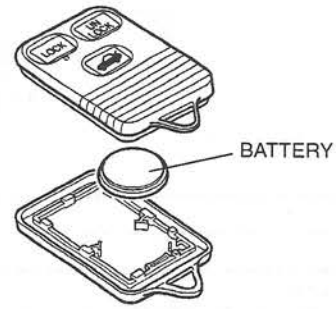

W6U914WAG

3. Assemble in the reverse order of disassembly.

Note
- The battery will last about **2 years** when used **10 times** a day.

TRANSMITTER INSPECTION

W6U914W18

Note
- If the battery is not subject to load it cannot be properly inspected.
- A correct measurement cannot be obtained when the battery temperature is low. If the inspection result is below the standard voltage, inspect it again after it has been at **18 °C {64 °F}** or more for **at least 30 minutes**.
- There is an auto power off function in the transmitter, so be sure to read the voltage **within 0.5 seconds** after pushing the button.
- If the transmitter is malfunctioning, the battery cannot be properly inspected.

1. Remove the transmitter cover.
2. Connect the positive (+) lead of the voltmeter to the positive (+) terminal of the transmitter and the negative (–) lead to the circuit element.

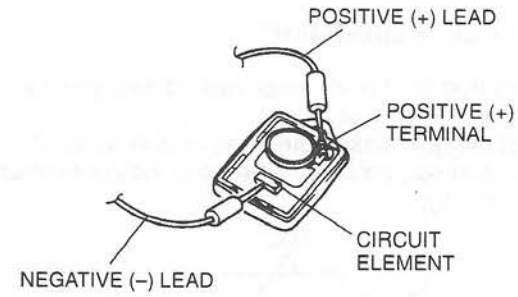

W6U914WD1

3. Push any button of transmitter 10 times or more in **every 1 second** and measure the voltage every time.
4. Compare the minimum voltage to the standard voltage.

Standard voltage
2.8 V or more

5. If not as specified, replace the transmitter battery.
6. If as specified and the keyless entry system does not function, perform to symptom troubleshooting. (Refer to 09–01E FOREWORD.)

KEYLESS UNIT INSPECTION

W6U914W19

1. Remove the rear package trim. (Refer to 09–17 REAR PACKAGE TRIM REMOVAL/INSTALLATION.)
2. Measure the voltage at the keyless unit terminals as indicated below.
3. Disconnect the keyless unit connector before checking for continuity at terminal B.
4. If not as specified, inspect the parts listed under "Inspection area" and the related wiring harnesses.
5. If the parts and wiring harnesses are okay but the system still does not work properly, replace the keyless unit.

Terminal Voltage List (Reference)

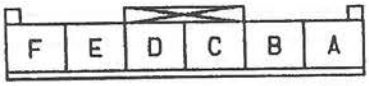

W6U914WAH

Terminal	Signal	Connection	Test condition	Voltage (V)/ Continuity	Inspection area
A	Power supply	ROOM 15 A fuse	Constant	B+	ROOM 15 A fuse
B	Keyless unit ground	GND	Constant: check for continuity to ground	Yes	GND
C	—	Not used	—	—	—
D	—	Not used	—	—	—
E	Door lock/door unlock/trunk lid unlock/warning buzzer output	CPU	Transmitter lock button pressed	5→3.5→5	• ROOM 15 A fuse • CPU • Transmitter • Jamming
			Transmitter unlock button pressed	5→1.7→5	
			Transmitter trunk button pressed	5→0→5	
			Other	5	
F	—	Not used	—	—	—

KEYLESS UNIT REMOVAL/INSTALLATION

W6U914W20

1. Disconnect the negative battery cable.
2. Remove the rear package trim. (Refer to 09–17 REAR PACKAGE TRIM REMOVAL/INSTALLATION.)
3. Disconnect the keyless unit connector.
4. Push the sides of clips and remove the keyless unit.
5. Install in the reverse order of removal.

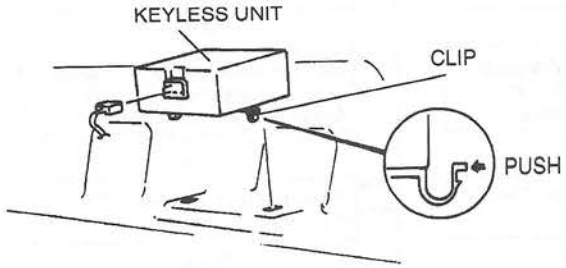

W6U914WAJ

TRANSMITTER ID CODE CHANGE

W6U914W21

Caution

- **Because up to three ID codes can be programmed into the keyless unit, the vehicle may be stolen with the ID code of an unused transmitter. In order to prevent this, the ID codes for all three transmitters must be reprogrammed when reprogramming an ID code. Also, when one or two transmitters are used, the ID code must be programmed three times with the same transmitter.**

- When programming the ID code into a transmitter, verify that other transmitters are not being operated in the vicinity.
- Program the ID code according to the procedures below.

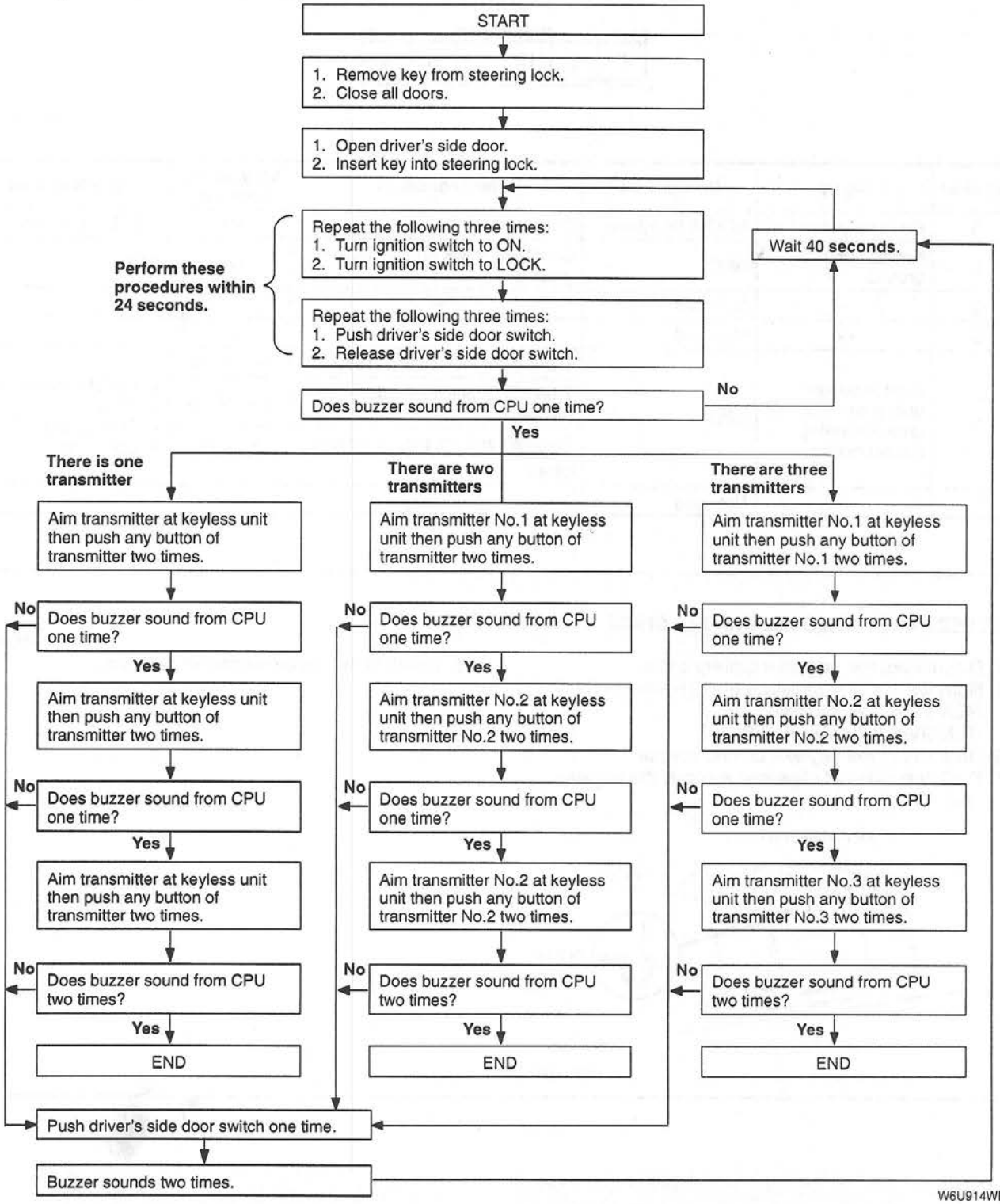

HOOD SWITCH INSPECTION

W6U914W22

1. Disconnect the negative battery cable.
2. Disconnect the hood switch connector.
3. Check for continuity between the hood switch terminals by using an ohmmeter.

○—○ : Continuity

Switch position	Terminal	
	A	B
Pushed		
Released	○	○

W6U914WAK

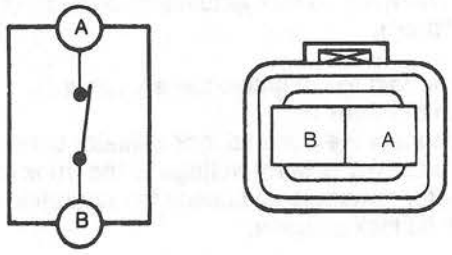

W6U914WAL

4. If not as specified, replace the hood switch.

TRUNK KEY CYLINDER SWITCH INSPECTION

W6U914W23

1. Open the trunk lid.
2. Disconnect the negative battery cable.
3. Disconnect the trunk key cylinder switch connector.
4. Check for continuity between the trunk key cylinder switch terminals by using an ohmmeter.

○—○ : Continuity

Switch position	Terminal	
	A	B
Neutral		
Unlock	○	○

W6U914WAM

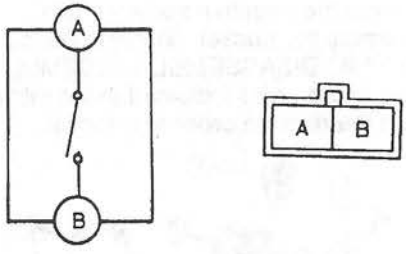

W6U914WAN

5. If not as specified, replace the trunk key cylinder.

TRUNK LID LOCK AND OPENER REMOVAL/INSTALLATION

W6U914W24

1. Disconnect the negative battery cable.
2. Open the trunk lid.
3. Remove the rear finisher.
4. Remove in the order indicated in the table.
5. Install in the reverse order of removal.

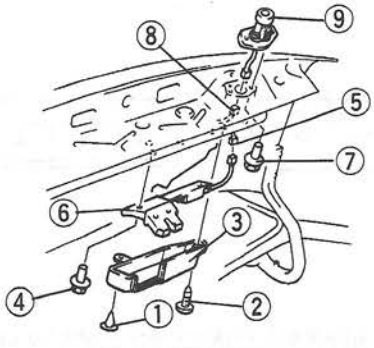

W6U914WAP

1	Fastener
2	Screw
3	Trunk lid lock cover
4	Bolt A
5	Connector A
6	Trunk lid lock
7	Bolt B
8	Connector B
9	Trunk key cylinder

TRUNK LID LOCK ACTUATOR INSPECTION

W6U914W25

Note
- The trunk lid lock actuator is built in the trunk lid lock.

1. Disconnect the negative battery cable.
2. Open the trunk lid.
3. Disconnect the trunk lid lock actuator connector.
4. Apply battery positive voltage to the trunk lid lock actuator terminals and check the operation of the trunk lid lock actuator.

Terminal		Actuator operation
B+	GND	
A	B	Unlock

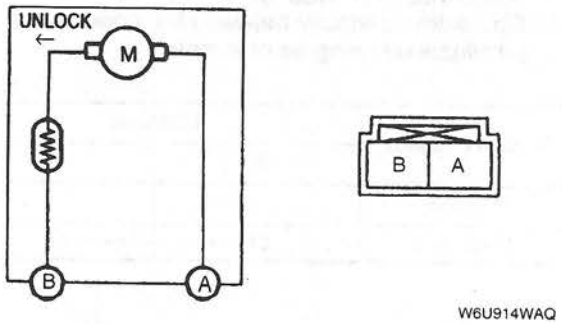

W6U914WAQ

5. If not as specified, replace the trunk lid lock.

TRUNK LID OPENER SWITCH REMOVAL/INSTALLATION

W6U914W26

1. Disconnect the negative battery cable.
2. Disassemble the pocket. (Refer to 09–17 FRONT DOOR TRIM DISASSEMBLY/ASSEMBLY.)
3. Remove in the order indicated in the table.
4. Install in the reverse order of removal.

1	Connector
2	Pocket bracket
3	Short cord
4	Trunk lid opener switch

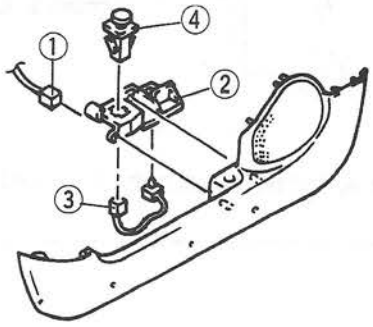

W6U914WAR

TRUNK LID OPENER SWITCH INSPECTION

W6U914W27

1. Disconnect the negative battery cable.
2. Remove the trunk lid opener switch.
3. Check for continuity between the trunk lid opener switch terminals by using an ohmmeter.

○—○ : Continuity

Switch position	Terminal	
	A	B
Off		
On	○	○

W6U914WAS

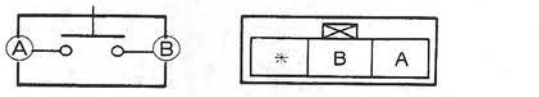

W6U914WAT

4. If not as specified, replace the trunk lid opener switch.

TRUNK LID STRIKER ADJUSTMENT

W6U914W28

1. Verify that the trunk lid can be closed easily and that there is no looseness.
2. If not correct, loosen the trunk lid striker installation bolts and move the striker horizontally or vertically.
3. Tighten the trunk lid striker installation bolts.

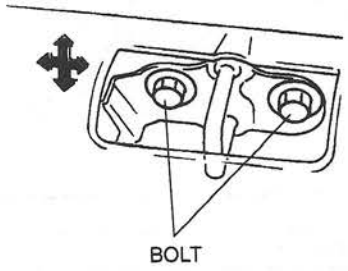

W6U914WAU

TRUNK LID STRIKER REMOVAL/INSTALLATION

W6U914W29

1. Remove the trunk end trim. (Refer to 09–17 TRUNK END TRIM REMOVAL/INSTALLATION.)
2. Remove the bolts.
3. Remove the trunk lid striker.
4. Install in the reverse order of removal.
5. Adjust the trunk lid striker. (Refer to 09–14 TRUNK LID STRIKER ADJUSTMENT.)

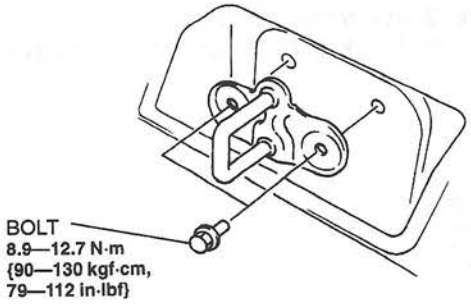

W6U914WAV

IMMOBILIZER SYSTEM SERVICE CAUTION

W6U914W30

Caution

- **When an immobilizer system component (such as the PCM, immobilizer unit, coil or the key) has failed, it must be accurately determined according to the troubleshooting procedures or by the display of the diagnostic trouble codes prior to carrying out the service procedures.**
- **If a normal component is mistakenly replaced and the ID number and/or code word are input into the new component, then neither component can be reused on other vehicles.**

IMMOBILIZER UNIT REMOVAL/INSTALLATION

W6U914W31

1. Disconnect the negative battery cable.
2. Remove the driver's side side panel.
3. Remove the lower panel.
4. Remove in the order indicated in the table.
5. Install in the reverse order of removal.

Caution

- **After replacing the immobilizer unit with a new one, the engine cannot be started without reprogramming the ID number of the keys and the code word of the new immobilizer unit. Input the ID number and code word. (Refer to 09–14 IMMOBILIZER SYSTEM REPROGRAM PROCEDURE.)**

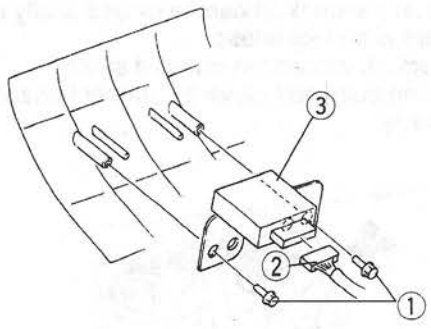

W6U914WAW

1	Nut
2	Connector
3	Immobilizer unit

IMMOBILIZER UNIT INSPECTION

W6U914W35

1. Remove the driver's side side panel.
2. Remove the lower panel.
3. Measure the voltage at the immobilizer unit terminals as indicated below.
4. Disconnect the immobilizer unit connector before checking for continuity at terminal C.
5. If not specified, inspect the parts listed under "Inspection area" and the related wiring harnesses.
6. If the parts and wiring harnesses are okay but the system still does not work properly, replace the immobilizer unit.

Terminal Voltage List (Reference)

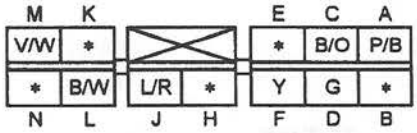

W6U914WC0

Terminal	Signal	Connected to	Voltage (V)		Inspection area
			IG LOCK	IG ON	
A	Communication with PCM	PCM	Below 0.1	B+	PCM
C	Ground	Ground	0	0	GND
D	Power supply to coil	Coil	Approx. 5.0	Approx. 5.0	Coil
F	Key ID number	Coil	Approx. 5.0	Approx. 5.0	Coil
J	Back-up power supply	Battery	B+	B+	ROOM 15 A fuse
L	Power supply	Ignition switch	0	B+	ENGINE 10 A fuse
M	Security light control	CPU	B+	B+	Security light

COIL REMOVAL/INSTALLATION

W6U914W32

Note
- Do not remove the coil unless you are replacing it.
- When the coil only is replaced, the immobilizer system reprogram procedure is not necessary.

1. Disconnect the negative battery cable.
2. Remove the column cover.
3. Remove in the order indicated in table.
4. Install in the reverse order of removal.

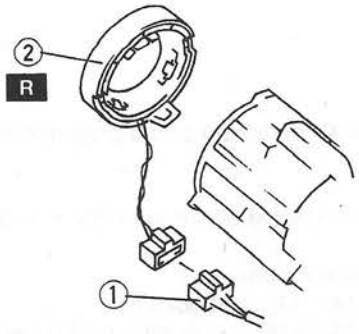

W6U914WAX

1	Connector
2	Coil ☞ Installation Note

Coil Installation Note
1. Install the hook 1 to the steering lock.
2. Install the hook 2 to the steering lock.

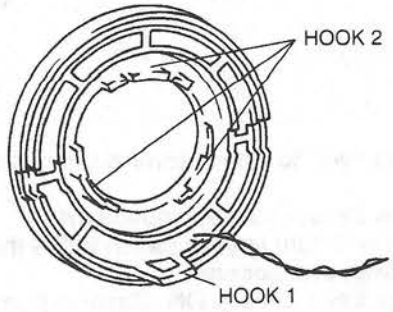

W6U914WBL

IMMOBILIZER SYSTEM REPROGRAM PROCEDURE

W6U914W33

Note
- When an error occurs during the reprogram procedures except when both the immobilizer unit and PCM are replaced, repeat the procedure from step 1, If you still can not reprogram, confirm how many keys can start the engine.
  Then, perform the key replacement or addition reprogram procedure according to the valid key number.
- To make a copy of the key or replace the immobilizer system component parts (the key(s), steering lock, immobilizer unit and/or PCM), customer should bring all keys she/he has to the dealer. This is because the previously programmed key IDs are erased when reprogramming the key IDs into the immobilizer unit and PCM.
- If customer has only one valid key when replacing the immobilizer system component parts, the dealer should contact a importer/distributor to obtain the code word.
- To replace the immobilizer unit or PCM, there should be at least one valid key. Otherwise, both the immobilizer unit and PCM should be replaced.
- The immobilizer unit and PCM cannot be changed from one car to another. If the immobilizer unit or PCM is replaced with one from another car, the engine will not start. Reprogramming of the IDs and code word of the Immobilizer unit that has already programmed as set is not possible.
- The immobilizer unit and PCM should not be replaced with a new one as a trial during troubleshooting. If this is done, the ID and code word will be programmed into the new unit and it cannot be used for other cars even if you find that the old unit was normal.
- The immobilizer system cannot be deactivated.
- Confirm that all keys registered can start the engine after the reprogram procedure.
- When customer does not need to register more than two keys, the following procedures can be stopped after registering two keys.

Key Replacement or Addition
When customer has brought two or more valid keys



W6U914WAY

Note
- If no specific time interval is given, step should be performed **within 30 seconds** of the previous step.

1. Cut new transponder equipped key(s).
2. Using key 1, turn ignition switch to ON then back to LOCK five times. Key should not remain ON or LOCK for **more than one second**.
   (1) Turn key 1 back to ON. Observe illumination of security light in instrument panel.
   (2) Turn key 1 to LOCK and remove key 1 from steering lock. Observe security light goes out.
3. Using key 2, start engine. Observe security light illumination (for **1—2 seconds**) and engine continues to run.
   (1) Turn key 2 to LOCK and remove from steering lock.
4. Repeat step 3 with key 1.
5. Repeat step 3 with key 3.
6. If there are 4—8 keys (valid and/or new keys), repeat step 3.
7. Wait for **30 seconds** to quit reprogram mode.

When customer has brought only one or no valid key (code word is required)

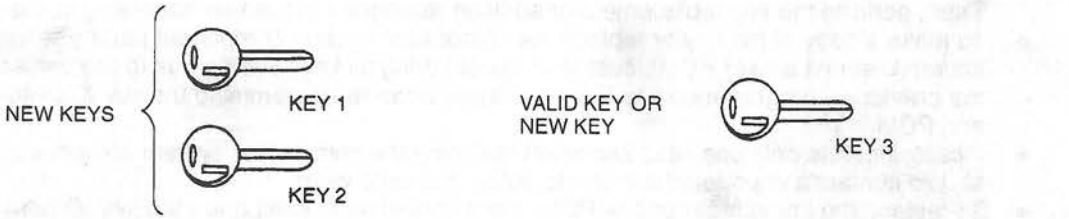

W6U914WAZ

Note
- If no specific time interval is given, step should be performed **within 30 seconds** of the previous step.

1. Cut new transponder equipped key(s).
2. Using key 1, turn ignition switch to ON then back to LOCK **five times**. Key should not remain ON or LOCK for **more than one second**.
   (1) Turn key 1 back to ON. Observe flashing of security light (**300 ms** ON — **300 ms** OFF) in instrument panel.
   (2) Turn key 1 to LOCK and wait for **5 minutes** until security light decrease in flashing frequency to **1.2 seconds**.
   (3) Input code word. (Refer to 09–14 CODE WORD INPUT PROCEDURE.)
   (4) Observe security light stops flashing and illuminates.
   (5) Start engine by key 1. Observe security light illumination (**about 1—2 seconds**) and engine continues to run.
   (6) Turn key 1 to LOCK and remove from steering lock.
3. Using key 2, start engine. Observe security light illumination (for **1—2 seconds**) and engine continues to run.
   (1) Turn key 2 to LOCK and remove from steering lock.
4. Repeat step 3 with key 3.
5. If there are 4—8 keys (valid and/or new keys), repeat step 3.
6. Wait for **30 seconds** to quit reprogram mode.

Steering Lock Replacement
When customer has brought two or more valid keys for old steering lock

Note
- When replacing the steering lock, the coil and keys should be replaced as a set.

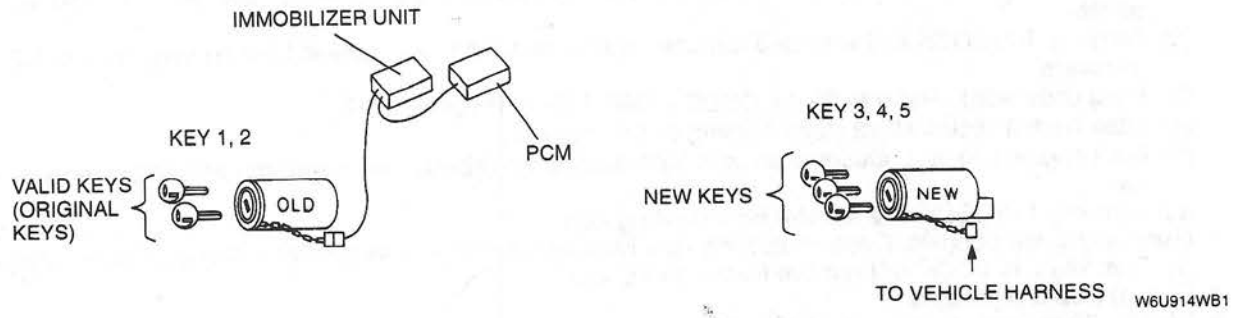

Note
- If no specific time interval is given, step should be performed **within 30 seconds** of the previous step.

1. Remove old steering lock. (Refer to 06–12 STEERING SHAFT COMPONENT DISASSEMBLY/ASSEMBLY.)
2. Connect new steering lock to ignition switch connector.
3. Connect old steering lock to coil connector as shown in figure.
4. Insert key 1 into old steering lock.
5. Insert key 3 into new steering lock and turn to ON then back to LOCK five times. Key should not remain ON or LOCK for **more than one second**.
   (1) Turn key 3 back to ON. Observe illumination of security light in instrument panel.
   (2) Turn key 3 to LOCK. Observe security light goes out.

Note
- Operate next two steps **within 30 seconds** of step 5–(2).

6. Remove key 1 from old steering lock and insert key 2 into old steering lock.
7. Using key 3 of new steering lock, start engine. Observe security light illumination (for **1—2 seconds**) and engine continues to run.
   (1) Turn key 3 to LOCK.

Note
- Operate next two steps **within 30 seconds** of step 7–(1).

8. Disconnect coil connector from old steering lock, and reconnect coil connector to new steering lock.
9. Using key 3 of new steering lock, start engine. Observe security light illumination (for **1—2 seconds**) and engine continues to run.
   (1) Turn key 3 to LOCK and remove from steering lock.
10. Repeat step 9 with key 4.
11. Repeat step 9 with key 5.
12. Wait for **30 seconds** to quit reprogram mode.
13. Install new steering lock.

When customer has brought only one or no valid key (code word is required)

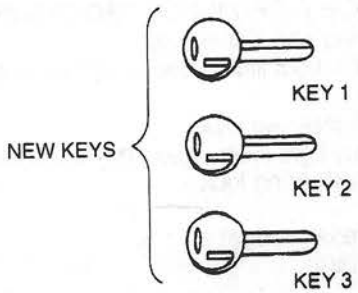

Note
- When replacing the steering lock, the coil and keys should be replaced as a set.
- If no specific time interval is given, step should be performed **within 30 seconds** of the previous step.

1. Replace steering lock. (Refer to 06–12 STEERING SHAFT COMPONENT DISASSEMBLY/ASSEMBLY.)
2. Using key 1, turn ignition switch to ON then back to LOCK **five times**. Key should not remain ON or LOCK for **more than one second**.
   (1) Turn key 1 back to ON. Observe flashing of security light (**300 ms** ON — **300 ms** OFF) in instrument panel.
   (2) Turn key 1 to LOCK and wait for **5 minutes** until security light decrease in flashing frequency to **1.2 seconds**.
   (3) Input code word. (Refer to 09–14 CODE WORD INPUT PROCEDURE.)
   (4) Observe the security light stops flashing and illuminates.
   (5) Start engine by key 1. Observe security light illumination (**about 1—2 seconds**) and engine continues to run.
   (6) Turn key 1 to LOCK and remove from steering lock.
3. Using key 2, start engine. Observe security light illumination (for **1—2 seconds**) and engine continues to run.
   (1) Turn key 2 to LOCK and remove from steering lock.
4. Repeat step 3 with key 3.
5. Wait for 30 seconds to quit reprogram mode.

Immobilizer Unit Replacement
When customer does not have valid key
- PCM needs to be replaced with immobilizer unit. Perform "Both Immobilizer unit and PCM Replacement" of the IMMOBILIZER SYSTEM REPROGRAM PROCEDURE.

When customer has brought at least one valid key (code word is required)

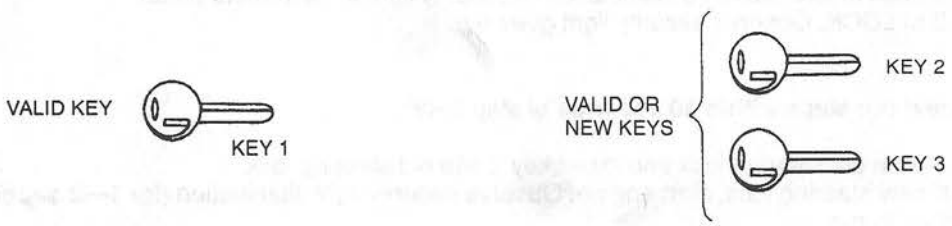

W6U914WB4

Note
- If no specific time interval is given, step should be performed **within 30 seconds** of the previous step.

1. Cut new transponder equipped key(s) if necessary.
2. Replace immobilizer unit. (Refer to 09–14 IMMOBILIZER UNIT REMOVAL/INSTALLATION.)
3. Using key 1, start engine. Observe security light illumination (for **1—2 seconds**) and engine continues to run.
   (1) Turn key 1 to LOCK and remove from steering lock.
4. Using key 2, turn ignition switch to ON then back to LOCK **five times**. Key should not remain ON or LOCK for **more than one second**.
   (1) Turn key 2 back to ON. Observe flashing of security light (**300 ms** ON — **300 ms** OFF) in instrument panel.
   (2) Turn key 2 to LOCK and wait for **5 minutes** until security light decrease in flashing frequency to **1.2 seconds**.
   (3) Input code word. (Refer to 09–14 CODE WORD INPUT PROCEDURE.)
   (4) Observe the security light stops flashing and illuminates.
   (5) Start engine by key 2. Observe security light illumination (about **1—2 seconds**) and engine continues to run.
   (6) Turn key 2 to LOCK and remove from steering lock.
5. Using key 1, start engine. Observe security light illumination (for **1—2 seconds**) and engine continues to run.
   (1) Turn key 1 to LOCK and remove from steering lock.
6. Repeat step 5 with key 3.
7. If there are 4—8 keys (valid and/or new keys), repeat step 5.
8. Wait for **30 seconds** to quit reprogram mode.

PCM Replacement

When customer does not have valid key

- Immobilizer unit needs to be replaced with PCM. Perform "Both Immobilizer unit and PCM Replacement" of the IMMOBILIZER SYSTEM REPROGRAM PROCEDURE.

When customer has brought two or more valid keys

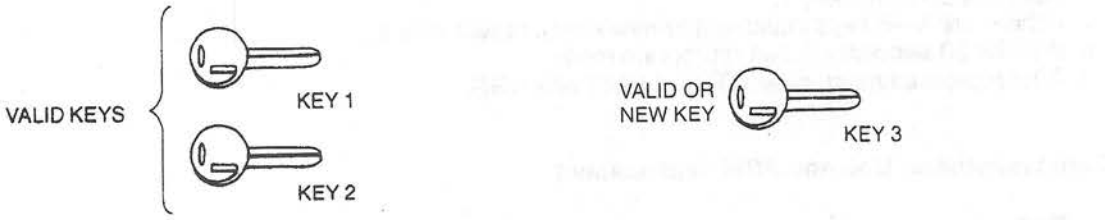

W6U914WB2

Note

- If no specific time interval is given, step should be performed **within 30 seconds** of the previous step.

1. Cut new transponder equipped key(s) if necessary.
2. Replace PCM. (Refer to 01–40A PCM REMOVAL/INSTALLATION [FS].) (Refer to 01–40B PCM REMOVAL/INSTALLATION [KL].)
3. Using key 1, turn ignition switch to ON, and observe security light illumination (for **1—2 seconds**) in instrument panel.
   (1) Turn key 1 to LOCK.
   (2) Turn key 1 to ON then back to LOCK **six times**. Key should not remain ON or LOCK for **more than one second**. It is particularly important to ensure that the 6th turning is done **within 1 second**.
   (3) Remove key 1.
4. Using key 2, turn ignition switch to ON. Observe security light illumination (for **1—2 seconds**).
   (1) Turn key 2 to LOCK and remove from steering lock.
5. Using key 1, start engine. Observe security light illumination (for **1—2 seconds**) and engine continues to run.
   (1) Turn key 1 to LOCK and remove from steering lock.
6. Repeat step 5 with key 3.
7. If there are 4—8 keys (valid and/or new keys), repeat step 5.
8. Wait for **30 seconds** to quit reprogram mode.
9. After reprogramming, clear DTCs of PCM with NGS.

When customer has brought only one valid key (code word is required)

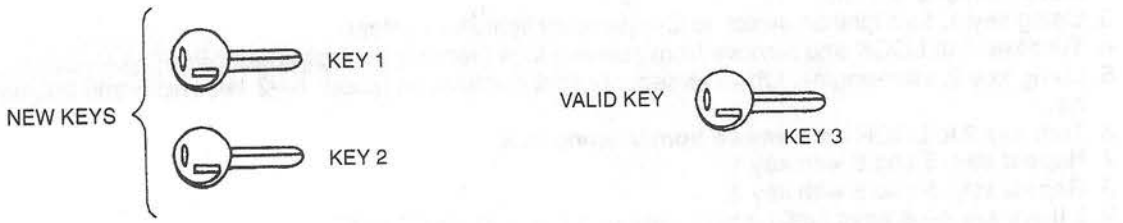

W6U914WB3

Note

- If no specific time interval is given, step should be performed **within 30 seconds** of the previous step.

1. Cut new transponder equipped key(s) if necessary.
2. Replace PCM. (Refer to 01–40A PCM REMOVAL/INSTALLATION [FS].) (Refer to 01–40B PCM REMOVAL/INSTALLATION [KL].)
3. Using key 1, turn ignition switch to ON. Observe security light illumination (for **1—2 seconds**) in instrument panel.
   (1) Turn key 1 to LOCK and remove from steering lock.
4. Using key 2, turn ignition switch to ON then back to LOCK **six times**. Key should not remain ON or LOCK for **more than one second**. It is particularly important to ensure that the 6th turning is done **within 1 second**.

(1) Observe flashing of security light (**300 ms** ON — **300 ms** OFF) in instrument panel.
(2) Wait for **5 minutes** until security light decrease in flashing frequency to **1.2 seconds**.
(3) Input code word. (Refer to 09–14 CODE WORD INPUT PROCEDURE.)
(4) Observe the security light stops flashing and illuminates.
(5) Turn key 2 to ON. Observe security light illumination (about **1—2 seconds**).
(6) Turn key 2 to LOCK and remove from steering lock.

5. Using key 3, start engine. Observe security light illumination (for **1—2 seconds**) and engine continues to run.
   (1) Turn key 3 to LOCK and remove from steering lock.
6. Repeat step 5 with key 1.
7. If there are 4—8 keys (valid and/or new keys), repeat step 5.
8. Wait for **30 seconds** to quit reprogram mode.
9. After reprogramming, clear DTCs of PCM with NGS.

Both Immobilizer Unit and PCM Replacement

Note
- Keys may be valid or new keys.
- When an error occurs in steps 1 to 4, repeat the procedure from step 1.
- When an error occurs in step 5, perform the "Reprogram error recovery procedure for both immobilizer unit and PCM replacement".
- If no specific time interval is given, step should be performed **within 30 seconds** of the previous step.

1. Cut new transponder equipped key(s) if necessary.
2. Replace immobilizer unit and PCM.
3. Using key 1, turn ignition switch to ON. Observe security light illuminates and then goes out in instrument panel.
   (1) Turn key 1 to LOCK. Observe security light blinks once repeatedly.
4. Using key 2, turn ignition switch to ON. Observe security light illuminates and then goes out.
   (1) Turn key 2 to LOCK. Observe security light blinks twice repeatedly.
5. Using key 3, turn ignition switch to ON. Observe security light illuminates and then goes out.
   (1) Turn key 3 to LOCK. Observe security light blinks three times repeatedly.
6. If there are 4—8 keys (valid and/or new keys), repeat step 4.
7. Wait for **30 seconds** to quit reprogram mode.
8. After reprogramming, clear DTCs of PCM with NGS.

Reprogram error recovery procedure for both immobilizer unit and pcm replacement

Note
- If no specific time interval is given, step should be performed **within 30 seconds** of the previous step.

1. Using key 1, start engine. After security light illuminates for **1—2 seconds**, turn key 1 to LOCK.
2. Using key 1, turn ignition switch to ON then back to LOCK **five times**. Key should not remain ON or LOCK for more than one second.
3. Using key 1, turn ignition switch to ON (security light illuminates).
4. Turn key 1 to LOCK and remove from steering lock (security light goes out).
5. Using key 2, start engine. Observe security light illumination (about **1—2 seconds**) and engine continues to run.
6. Turn key 2 to LOCK and remove from steering lock.
7. Repeat step 5 and 6 with key 1.
8. Repeat step 5 and 6 with key 3.
9. If there are 4—8 keys (valid and/or new keys), repeat step 5 and 6.
10. Wait for **30 seconds** to quit reprogram mode.
11. After reprogramming, clear DTCs of PCM with NGS.

CODE WORD INPUT PROCEDURE

W6U914W34

Note
- A code word is composed of eight digits from 1—9 and is part of the Immobilizer unit from manufacturer. Each unit has its own code word. To obtain the code word, you need to have the Immobilizer serial number, then ask importer/distributor.
- The process for inputting the code word to the PCM is done by cycling the ignition key and counting the number of flashes of the security light. The catch of number from security light flashing comes with the timing of that cycling of the key.

1. Wait **for 5 minutes** until security light flashes slowly. (**300 ms** ON, **300 ms** OFF → **1.2 s** ON, **1.2 s** OFF)
2. Input the code word as the example shown bellow.

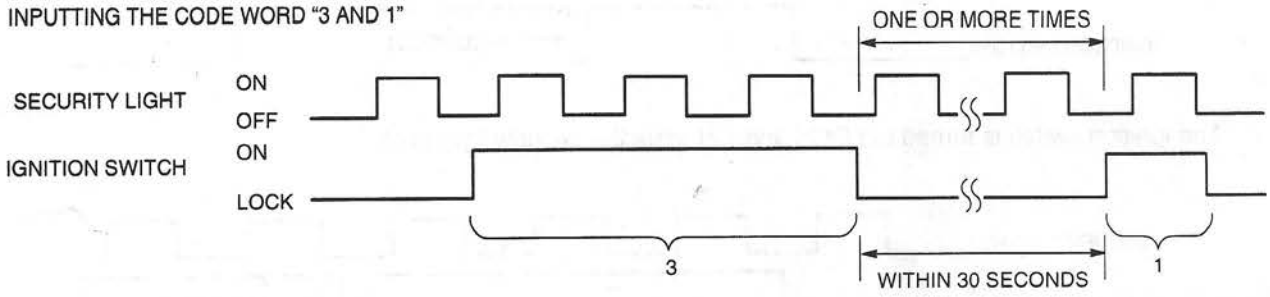

W6U914WB6

(1) Turn ignition switch to ON during security light OFF and count three illumination cycles. As the light goes out after the third illumination, turn key to LOCK.
(2) **Within 30 second** of going to LOCK, turn ignition switch to ON during security light OFF and count one illumination cycles. As the light goes out after the first illumination, turn key to LOCK.
(3) Repeat step (2) for rest of six digits.

3. When code word is registered correctly in the PCM. The security light stops flashing and illuminates.
4. As soon as the security light stops flashing and illuminates, the following immobilizer system reprogram procedure should be started.

Note
- If the code word is not input correctly, the security light goes out after all eight digits are input. In this case, perform the "Code Word Input Error Recovery Procedure".

Examples of Incorrect Input of Code Word

Note
- The security light must flash one or more times between the figures of the code word.
- If the code word is input incorrectly, the security light goes out. Turn the ignition switch to ON then back to LOCK five times (except PCM replacement) or six times (PCM replacement) and repeat the procedure to input the all eight figures for the code word.
- When an error occurs during the reprogram procedures except when both the immobilizer unit and PCM are replaced, repeat the procedure from step 1. If you still can not reprogram, confirm how many keys can start the engine. Then, perform the key replacement or addition reprogram procedure according to the valid key number.

- The security light flashes ten or more times while the ignition switch is at ON position.

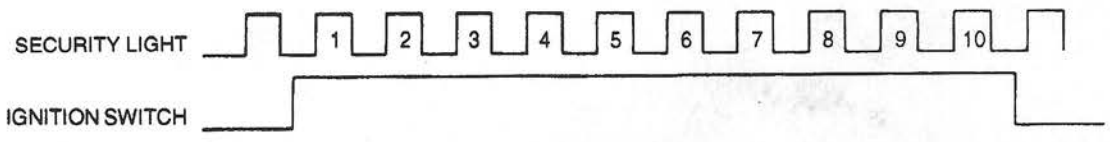

W6U914WB7

- The ignition switch is turned to ON and LOCK while the security light is off.

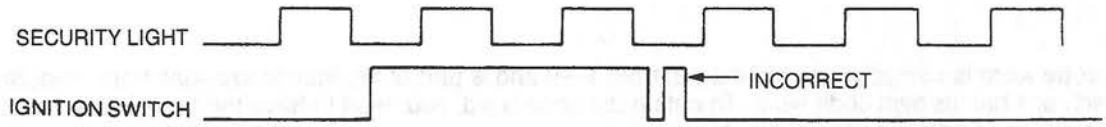

W6U914WB8

- The ignition switch is turned to LOCK and ON while the security light is on.

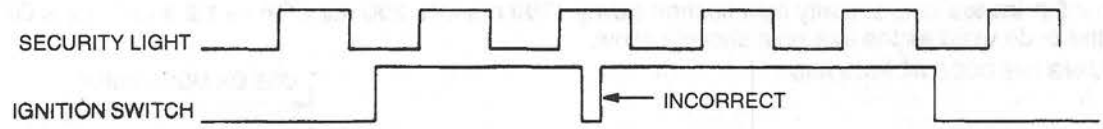

W6U914WB9

- The ignition switch is turned to LOCK and ON while the security light is off.

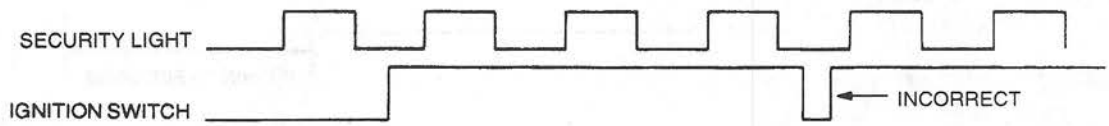

W6U914WBA

- The unmatch cord word to the immobilizer unit is input.

Code Word Input Error Recovery Procedure

1. Turn ignition switch to ON then back to LOCK five times (except PCM replacement) or six times (PCM replacement). Key should not remain ON or LOCK for more than one second.
2. Repeat the "CODE WORD INPUT PROCEDURE".

09–15 SLIDING SUNROOF

SUNROOF UNIT
REMOVAL/INSTALLATION 09–15–1
SUNROOF UNIT DISASSEMBLY 09–15–2
SUNROOF UNIT ASSEMBLY 09–15–2
DEFLECTOR
REMOVAL/INSTALLATION 09–15–3
Rivet Removal Note 09–15–4
Rivet Installation Note 09–15–4
FRONT DRAIN HOSE REMOVAL 09–15–4
FRONT DRAIN HOSE INSTALLATION . 09–15–4
REAR DRAIN HOSE REMOVAL 09–15–5
REAR DRAIN HOSE INSTALLATION .. 09–15–5
GLASS PANEL
REMOVAL/INSTALLATION 09–15–5
GLASS PANEL ADJUSTMENT 09–15–6
SUNROOF MOTOR INSPECTION 09–15–6
Motor 09–15–6
Limit Switch 09–15–6
SUNROOF MOTOR REMOVAL 09–15–7
SUNROOF MOTOR INSTALLATION ... 09–15–7
SUNROOF SWITCH
REMOVAL/INSTALLATION 09–15–7
SUNROOF SWITCH INSPECTION 09–15–7
SUNROOF CONTROL MODULE
INSPECTION 09–15–8
Terminal Voltage List (Reference) 09–15–8
SUNROOF CONTROL MODULE
REMOVAL/INSTALLATION 09–15–9

SUNROOF UNIT REMOVAL/INSTALLATION

1. Disconnect the negative battery cable.
2. Remove the headliner. (Refer to 09–17 HEADLINER REMOVAL/INSTALLATION.)
3. Remove the glass panel. (Refer to 09–15 GLASS PANEL REMOVAL/INSTALLATION.)
4. Disconnect the front and rear drain hose from the sunroof unit.
5. Disconnect the roof harness from the sunroof unit.
6. Remove the bolts, nut and fastener.
7. Pull the sunroof unit downward to disengage pins from the sunroof unit.
8. Remove the sunroof unit.

W6U915W01

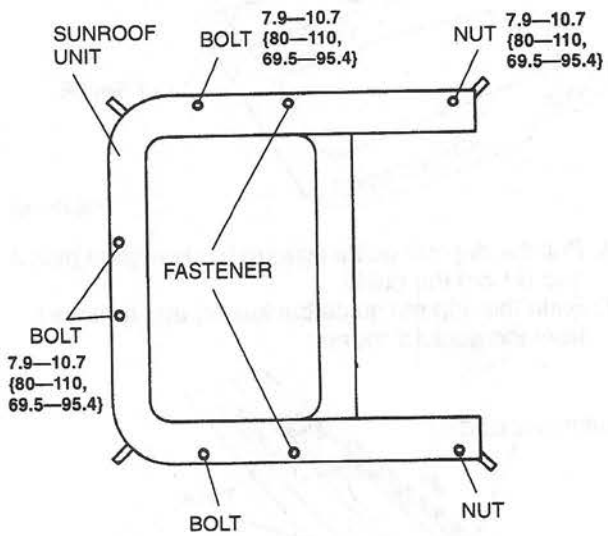

N·m {kgf·cm, in·lbf}

W6U915WA0

9. Install in the reverse order of removal.
10. Adjust the glass panel. (Refer to 09–15 GLASS PANEL ADJUSTMENT.)

SUNROOF UNIT DISASSEMBLY

W6U915W02

1. Remove the screws, and remove the drip rail.

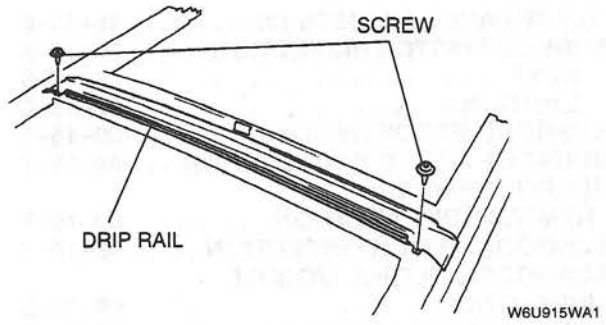

W6U915WA1

2. Remove the screws.
3. Slide the sunshade backward, and remove it from the sunroof frame.

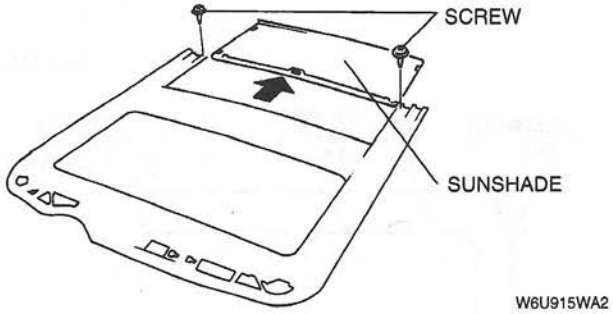

W6U915WA2

4. Pull the drip rail guide upward to disengage pins A and B from the guide.
5. Slide the drip rail guide backward, and remove it from the sunroof frame.

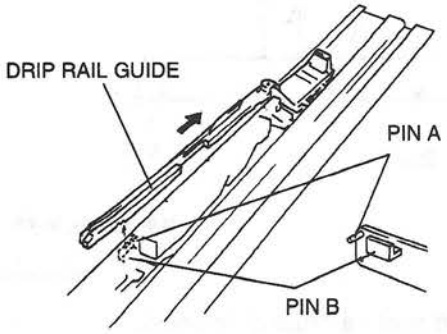

W6U915WA3

6. Remove the sunroof motor. (Refer to 09–15 SUNROOF MOTOR REMOVAL.)
7. Slide the guide backward, and remove it from the sunroof frame.

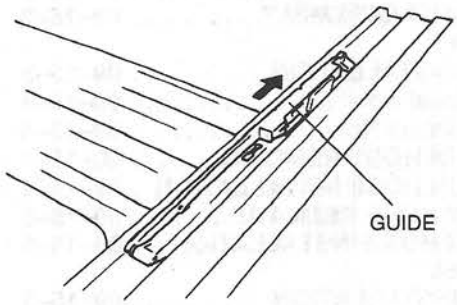

W6U915WA4

8. Remove the drive unit from the guide.

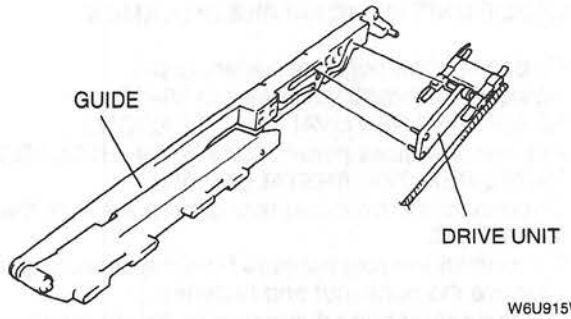

W6U915WA5

9. Remove the deflector. (Refer to 09–15 DEFLECTOR REMOVAL/INSTALLATION.)
10. Remove the sunroof control module. (Refer to 09–15 SUNROOF CONTROL MODULE REMOVAL/INSTALLATION.)

SUNROOF UNIT ASSEMBLY

W6U915W03

1. Install the sunroof control module. (Refer to 09–15 SUNROOF CONTROL MODULE REMOVAL/INSTALLATION.)
2. Install the deflector. (Refer to 09–15 DEFLECTOR REMOVAL/INSTALLATION.)
3. Install the drive unit to the guide.

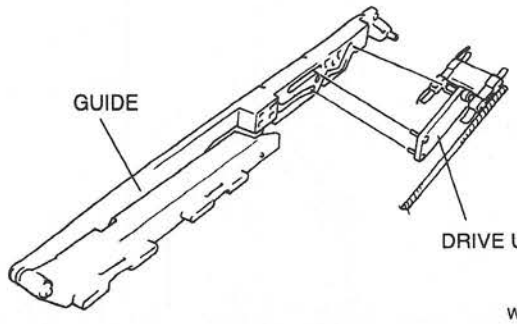

W6U915WA6

4. Install the guide to the sunroof frame by sliding it forward until reaches to the end of rail.

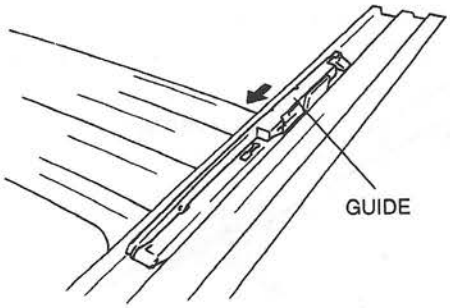

W6U915WA7

5. Adjust the drive unit, and insert an **approximately 3.0 mm {0.12 in} diameter** screwdriver or equivalent tool to align the drive unit with the guide.

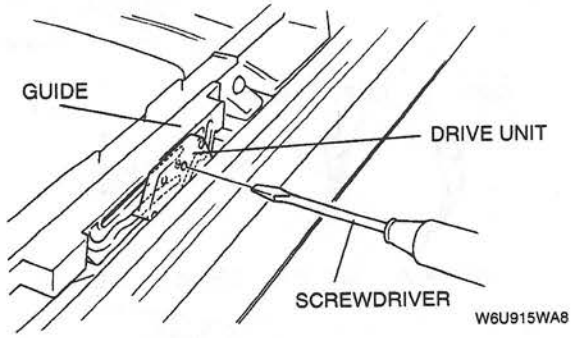

W6U915WA8

6. Install the sunroof motor. (Refer to 09–15 SUNROOF MOTOR INSTALLATION.)
7. Slide the drip rail guide forward, and install it to the sunroof frame.
8. Push the drip rail guide downward to engage pins A and B to the guide.

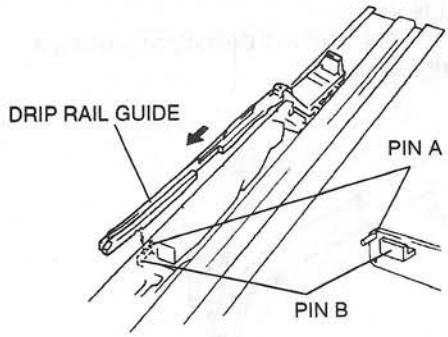

W6U915WA9

9. Slide the sunshade forward, and install it to the sunroof frame.
10. Install the screws.

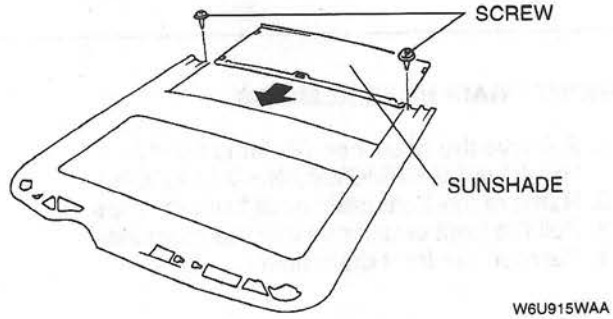

W6U915WAA

11. Install the screws, and install the drip rail.

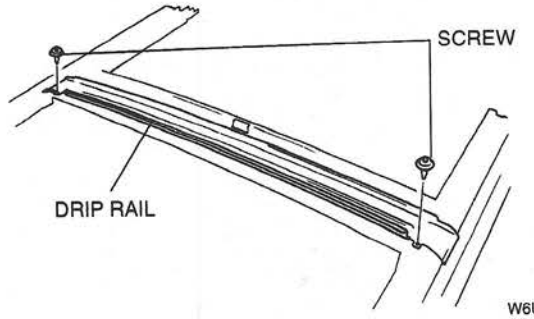

W6U915WAB

DEFLECTOR REMOVAL/INSTALLATION

1. Fully open the glass panel.
2. Remove in the order indicated in the table.
3. Install in the reverse order of removal.

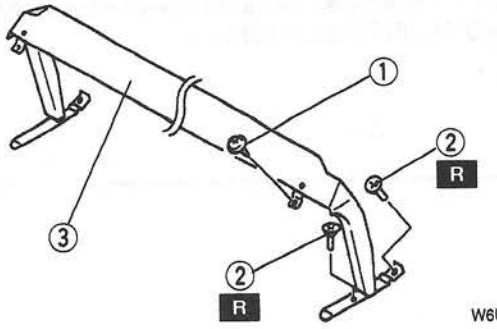

W6U915WAC

W6U915W04

1	Screw
2	Rivet ☞ Removal Note ☞ Installation Note
3	Deflector

Rivet Removal Note

- Remove the rivets from the deflector by using a drill or cutting pliers.

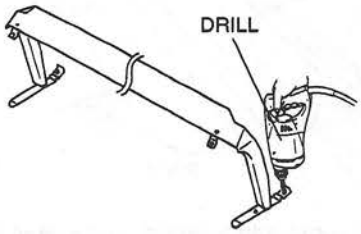

W6U915WAQ

Rivet Installation Note

- Install the rivets to the deflector by using a hand riveter.

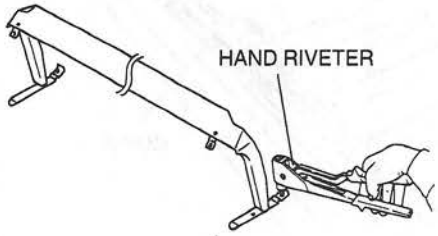

W6U915WAR

FRONT DRAIN HOSE REMOVAL

1. Remove the headliner. (Refer to 09–17 HEADLINER REMOVAL/INSTALLATION.)
2. Remove the front drain hose from the clips.
3. Pull the front drain hose into the room side.
4. Remove the front drain hose.

W6U915W05

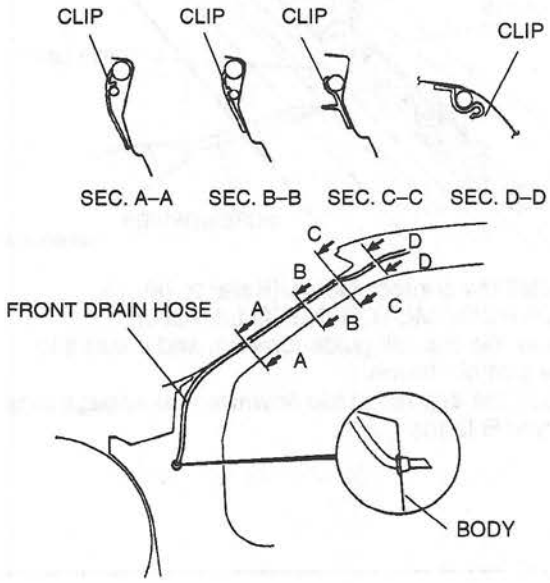

W6U915WAD

FRONT DRAIN HOSE INSTALLATION

W6U915W06

1. Apply soapy water to the front drain hose inserting area.
2. Insert one end of the front drain hose into the sunroof frame, set the hose along the clips, and insert the front drain hose joint into the hinge pillar inner hole.
3. Install the headliner. (Refer to 09–17 HEADLINER REMOVAL/INSTALLATION.)

REAR DRAIN HOSE REMOVAL

W6U915W17

1. Remove the headliner. (Refer to 09–17 HEADLINER REMOVAL/INSTALLATION.)
2. Remove the rear drain hose from the clips.
3. Pull the rear drain hose into the room side.
4. Remove the rear drain hose.

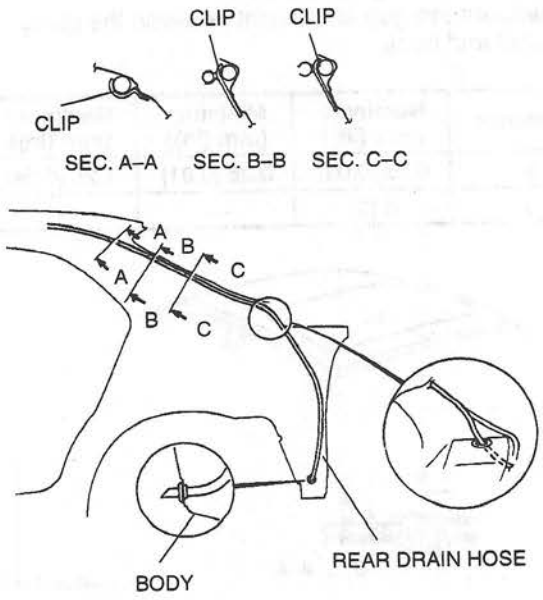

W6U915WAE

REAR DRAIN HOSE INSTALLATION

W6U915W07

1. Apply soapy water to the rear drain hose inserting area.
2. Insert one end of the rear drain hose into the sunroof frame, set the hose along the clips, and insert the rear drain hose joint into the rear pillar inner hole.
3. Install the headliner. (Refer to 09–17 HEADLINER REMOVAL/INSTALLATION.)

GLASS PANEL REMOVAL/INSTALLATION

W6U915W08

1. Fully open the sunshade.
2. Remove the screws.

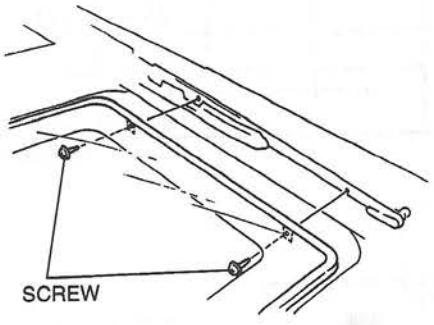

W6U915WAF

3. Peel the weatherstrip off the glass panel.

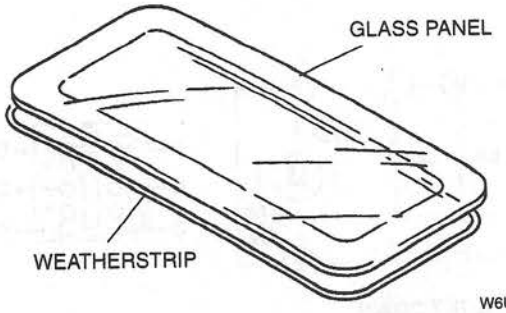

W6U915WAG

4. Install in the reverse order of removal.
5. Adjust the glass panel. (Refer to 09–15 GLASS PANEL ADJUSTMENT.)

GLASS PANEL ADJUSTMENT

W6U915W09

1. Fully close the glass panel.
2. Measure the gap and height between the glass panel and body.

Clearance	Nominate (mm {in})	Minimum (mm {in})	Maximum (mm {in})
a	0.75 {0.03}	0.25 {0.01}	1.25 {0.04}
b	0 {0}	—	—

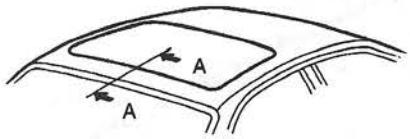

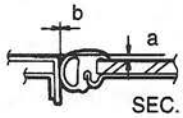

W6U915WAH

3. If not as specified, loosen the glass panel installation screws, and reposition the glass panel.
4. Tighten the glass panel installation screws.

Tightening torque
2.5—3.5 N·m {25—36 kgf·cm, 22—31 in·lbf}

SUNROOF MOTOR INSPECTION

W6U915W10

Motor

1. Remove the sunroof motor. (Refer to 09–15 SUNROOF MOTOR REMOVAL.)
2. Apply battery positive voltage to the sunroof motor terminals and check the operation of the motor.

Connection		Motor operation
B+	GND	
E	F	Open/Tilt down (turn right)
F	E	Close/Tilt up (turn left)

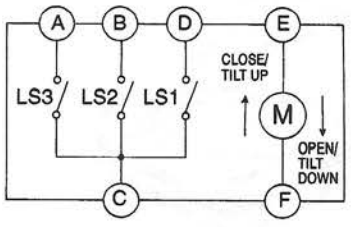

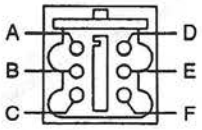

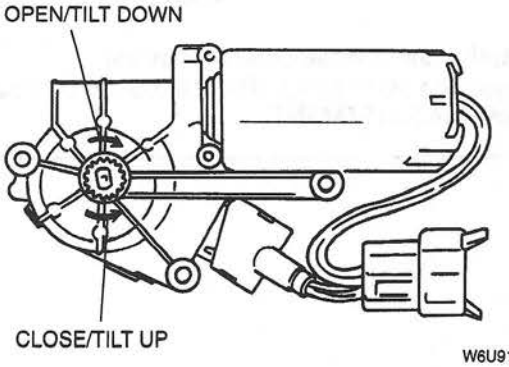

W6U915WAS

3. If not as specified, replace the sunroof motor.

Limit Switch

1. Remove the headliner. (Refer to 09–17 HEADLINER REMOVAL/INSTALLATION.)
2. Disconnect the connector.
3. Check for continuity between the sunroof motor terminals by using an ohmmeter.

○—○ : Continuity

Glass panel position	Terminal			
	A	B	C	D
Fully open	○		○	
		○	○	
			○	○
Fully closed				
Fully tilt up	○		○	
			○	○

W6U915WAU

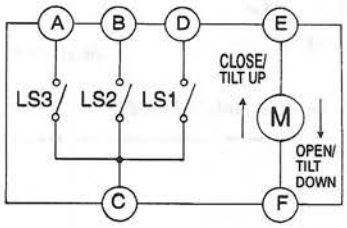

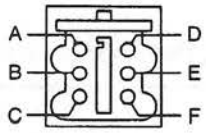

W6U915WAV

4. If not as specified, replace the sunroof motor.

SUNROOF MOTOR REMOVAL

W6U915W11

1. Fully close the glass panel.
2. Disconnect the negative battery cable.
3. Remove the headliner. (Refer to 09–17 HEADLINER REMOVAL/INSTALLATION.)
4. Disconnect the connector.
5. Remove the screws, and remove the sunroof motor.

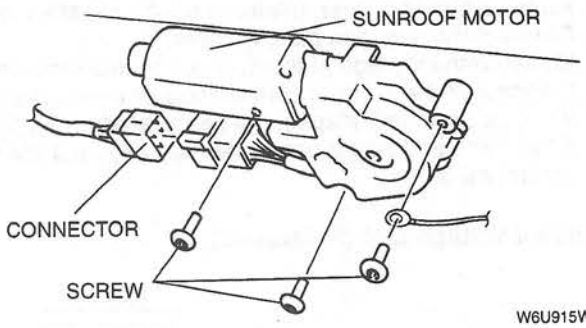

W6U915WAJ

SUNROOF MOTOR INSTALLATION

W6U915W12

1. Connect the sunroof motor connector.
2. Connect the sunroof switch connector.
3. Connect the negative battery cable.
4. Turn the IG switch to ON.
5. Press the CLOSE side of the slide switch until the sunroof motor stops.
6. Disconnect the sunroof switch connector.
7. Install the screws, and install the sunroof motor.
8. Install the headliner. (Refer to 09–17 HEADLINER REMOVAL/INSTALLATION.)

SUNROOF SWITCH REMOVAL/INSTALLATION

W6U915W13

1. Disconnect the negative battery cable.
2. Disengage the clip A by using a tape-wrapped flathead screwdriver as shown in the figure.
3. Pull the sunroof switch downward to disengage hook B from the headliner.

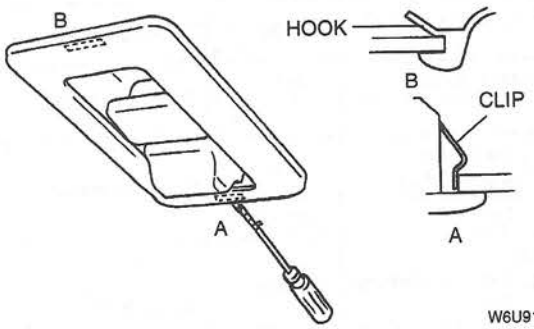

W6U915WAP

4. Disconnect the connector, and remove the sunroof switch.

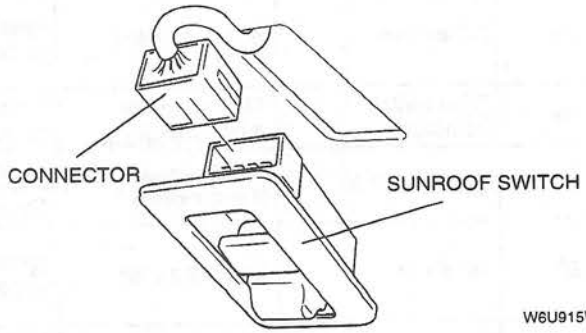

W6U915WAK

5. Install in the reverse order of removal.

SUNROOF SWITCH INSPECTION

W6U915W14

1. Remove the sunroof switch. (Refer to 09–15 SUNROOF SWITCH REMOVAL/INSTALLATION.)
2. Check for continuity between the sunroof switch terminals by using an ohmmeter.

○—○ : Continuity

Switch position	Terminal				
	A	B	D	E	F
Slide open	○		○		
Slide close		○	○		
Tilt-up			○		○
Tilt-down			○	○	

W6U915WAL

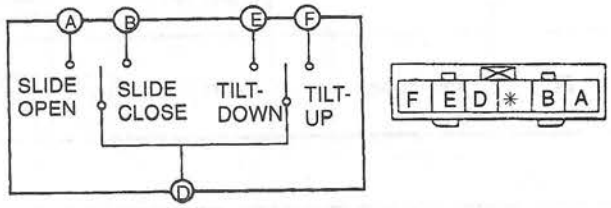

W6U915WAM

3. If not as specified, replace the sunroof switch.

SUNROOF CONTROL MODULE INSPECTION

W6U915W15

1. Remove the headliner. (Refer to 09–17 HEADLINER REMOVAL/INSTALLATION.)
2. Connect the negative battery cable.
3. Measure the voltage at the sunroof control module terminals as indicated below.
4. Disconnect the sunroof control module connector before checking for continuity at terminal 1A and 2B.
5. If not as specified, inspect the parts listed under "Inspection area" and the related wiring harnesses.
6. If the parts and wiring harnesses are okay but the system still does not work properly, replace the sunroof control module.

Terminal Voltage List (Reference)



W6U915WAT

Terminal	Signal	Connection	Test condition		Voltage (V)/ Continuity	Inspection area
1A	GND	GND	Constant: check for continuity to ground		Yes	GND
1B	Sunroof open/tilt down	Sunroof motor	Sunroof opening/tilting down		B+	• Sunroof switch • Sunroof motor
			Sunroof closing/tilting up		0	
1C	IG1	Sunroof 15 A fuse	Ignition switch at ON		B+	Sunroof 15 A fuse
			Ignition switch at LOCK or ACC		0	
1D	Sunroof close/tilt up	Sunroof motor	Sunroof opening/tilting down		0	• Sunroof switch • Sunroof motor
			Sunroof closing/tilting up		B+	
2A	Slide open	Sunroof switch	Ignition switch at ON	Slide open switch at on	0	Sunroof switch
				Other	Approx. 5	
2B	Limit switch common	Sunroof motor (Limit switch)	Constant: check for continuity to ground		Yes	Sunroof motor
2C	Limit switch 3	Sunroof motor (Limit switch)	Sunroof fully closed position		Approx. 5	Sunroof motor
			Other		0	
2D	Tilt down	Sunroof switch	Ignition switch at ON	Tilt down switch at on	0	Sunroof switch
				Other	Approx. 5	
2E	Limit switch 2	Sunroof motor (Limit switch)	Sunroof fully closed position/tilting up/tilting down/fully tilted up position		Approx. 5	Sunroof motor
			Other		0	
2F	Tilt up	Sunroof switch	Ignition switch at ON	Tilt up switch at on	0	Sunroof switch
				Other	Approx. 5	
2G	Limit switch 1	Sunroof motor (Limit switch)	Sunroof fully opened position/fully tilted up position		0	Sunroof motor
			Other		Approx. 5	
2H	Slide close	Sunroof switch	Ignition switch at ON	Slide close switch at on	0	Sunroof switch
				Other	Approx. 5	

SUNROOF CONTROL MODULE REMOVAL/INSTALLATION

W6U915W16

1. Disconnect the negative battery cable.
2. Remove the headliner. (Refer to 09–17 HEADLINER REMOVAL/INSTALLATION.)
3. Slide the sunroof control module, and disengage hooks from the sunroof frame.
4. Disconnect the connectors, and remove the sunroof control module.
5. Install in the reverse order of removal.

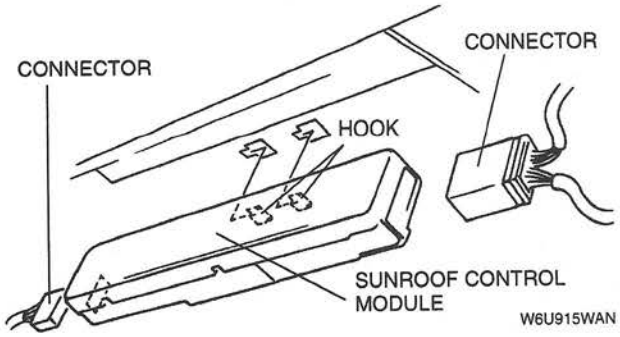

09–16 EXTERIOR TRIM

EXTRACTOR CHAMBER REMOVAL/INSTALLATION 09–16–1
RADIATOR GRILLE REMOVAL 09–16–1
RADIATOR GRILLE INSTALLATION ... 09–16–1
FRONT FLAP REMOVAL/INSTALLATION 09–16–2
COWL GRILLE REMOVAL/INSTALLATION 09–16–2
REAR FINISHER REMOVAL/INSTALLATION 09–16–2
SIDE PROTECTOR No.1, No.2 REMOVAL 09–16–2
SIDE PROTECTOR No.1, No.2 INSTALLATION 09–16–3
WINDSHIELD MOLDING REMOVAL ... 09–16–3
WINDSHIELD MOLDING INSTALLATION 09–16–3
REAR WINDOW MOLDING REMOVAL . 09–16–5
REAR WINDOW MOLDING INSTALLATION 09–16–5
FRONT BELTLINE MOLDING REMOVAL/INSTALLATION 09–16–5
REAR BELTLINE MOLDING REMOVAL/INSTALLATION 09–16–5
ROOF MOLDING REMOVAL 09–16–6
ROOF MOLDING INSTALLATION 09–16–6
AIRDAM SKIRT REMOVAL/INSTALLATION 09–16–7

EXTRACTOR CHAMBER REMOVAL/INSTALLATION

W6U916W01

1. Remove the rear bumper. (Refer to 09–10 REAR BUMPER REMOVAL/INSTALLATION.)
2. Remove the rear side seat. (Refer to 09–13 REAR SEAT REMOVAL/INSTALLATION.)
3. Remove the trunk compartment covering. (Refer to 09–17 TRUNK COMPARTMENT COVERING REMOVAL/INSTALLATION.)
4. Remove the screw.
5. Remove the extractor chamber.

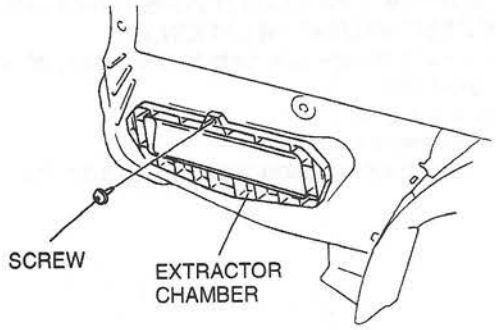

W6U916WA0

6. Install in the reverse order of removal.

RADIATOR GRILLE REMOVAL

W6U916W02

1. Push the clips downward by using a tape-wrapped flathead screwdriver.
2. Remove the radiator grille.

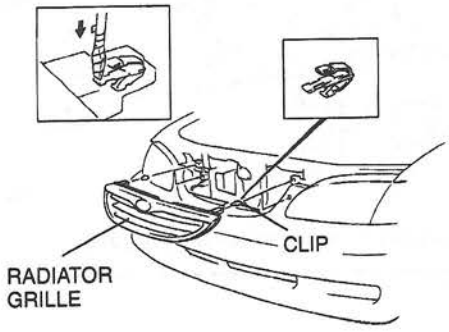

W6U916WA1

RADIATOR GRILLE INSTALLATION

W6U916W03

1. Insert the clips into the radiator grille.
2. Install the radiator grille.

FRONT FLAP REMOVAL/INSTALLATION

1. Remove the screws.
2. Remove the fastener.
3. Remove the front flap.

W6U916W04

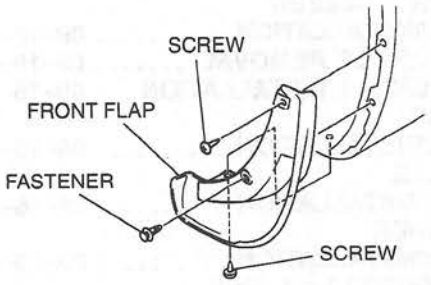

W6U916WA2

4. Install in the reverse order of removal.

COWL GRILLE REMOVAL/INSTALLATION

1. Remove the windshield wiper arm and blade. (Refer to 09–19 WINDSHIELD WIPER ARM AND BLADE REMOVAL/INSTALLATION.)
2. Pull the cowl grille weatherstrip to disengage clips B from the body.
3. Remove the caps.
4. Remove the screws.
5. Pull the cowl grille to disengage clips A from the body.

W6U916W05

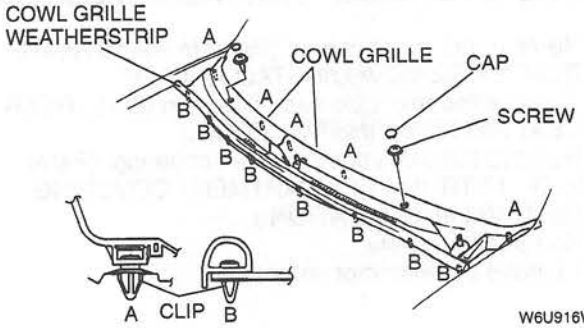

W6U916WA3

6. Install in the reverse order of removal.

REAR FINISHER REMOVAL/INSTALLATION

1. Remove the screws and bolts and nuts.
2. Pull the rear finisher to disengage clips A and pins B from the body.

W6U916W06

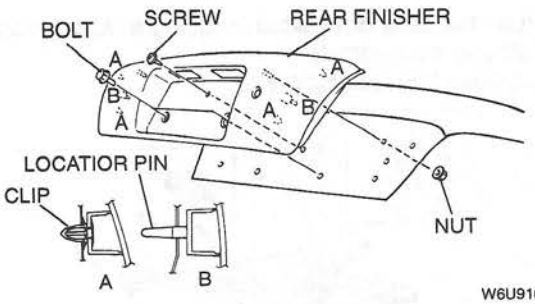

W6U916WA4

3. Install in the reverse order of removal.

SIDE PROTECTOR No.1, No.2 REMOVAL

1. Pry the side protector end **20—30 mm {0.79—1.18 in}** by using a flathead screwdriver or a razor knife.
2. Pull the side protector forward to remove it.

W6U916W07

Note

- The side protector is installed with double-sided adhesive tape. If the side protector is difficult to remove, soften the double-sided adhesive tape by using a hot air blower.

SIDE PROTECTOR No.1, No.2 INSTALLATION

W6U916W08

1. Remove the adhesive remaining on the side protector (if it will be reused) and the body by using a razor knife.
2. Remove any grease or dirt from the adhesion surface of the side protector (if it will be reused) and body.
3. Attach double-sided adhesive tape to the side protector as shown (if it will be reused.).

	Nominate (mm {in})	Clearance (mm {in})	
		Minimum	Maximum
A	2.5 {0.10}	1.5 {0.06}	3.5 {0.13}
B	11.0 {0.43}	—	—
C	50.0 {1.97}	—	—
D	35.0 {1.38}	—	—

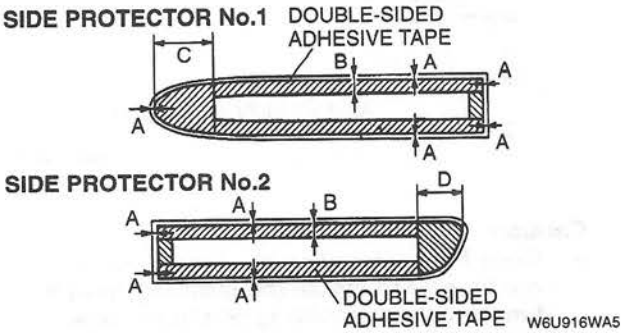

4. Peel off the wax paper from the double-sided adhesive tape and attach the side protector onto the body as shown.

	Distance from vehicle front end (mm {in})	Nominate (mm {in})
A	1600 {62.99}	208.5 {8.21}
B	2000 {78.74}	212.1 {8.35}
C	2500 {98.43}	216.9 {8.54}
D	2600 {102.36}	218.0 {8.58}
E	2900 {114.17}	220.7 {8.69}
F	3150 {124.02}	223.1 {8.78}

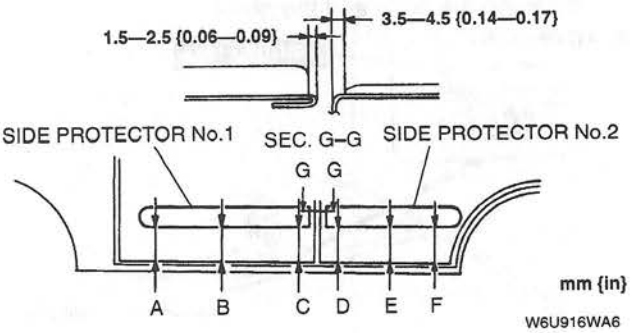

WINDSHIELD MOLDING REMOVAL

W6U916W09

Note
- Windshield molding is a replacement part.

1. Remove the cowl grille.
2. Pull the windshield molding forward to remove it.

WINDSHIELD MOLDING INSTALLATION

W6U916W10

1. Apply protective tape along the edge of the body to protect it from damage.
2. Cut the sealant by using a razor knife as shown.

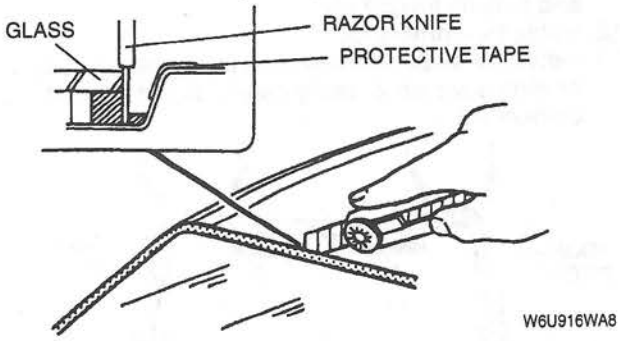

3. Insert the blade of the **SST** (Sealant remover) into the sealant, and pull on the bar to cut the sealant near the body as shown.

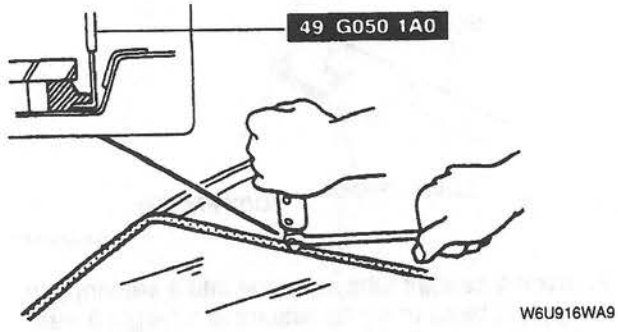

4. Insert the blade of the **SST** (Sealant remover) into the sealant, and pull on the bar to cut the sealant near the glass as shown.

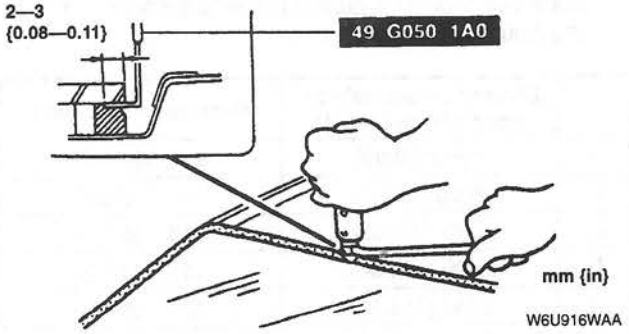

5. Remove as much sealant as possible from between the body and the glass.

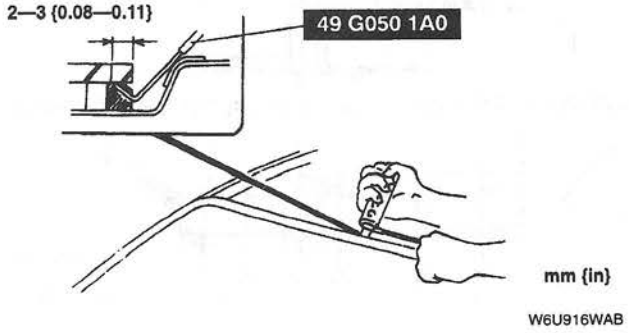

Caution

- **Keep the area free of dirt and grease, and do not touch the surface or the primer may not properly bond to the surface of the glass and body which may cause leaks to occur.**

6. Use a brush to apply primer to the bonding area of the glass and body within the region shown. Use only glass primer on the glass and body primer on the body. Allow it to dry for **approximately 30 minutes**.

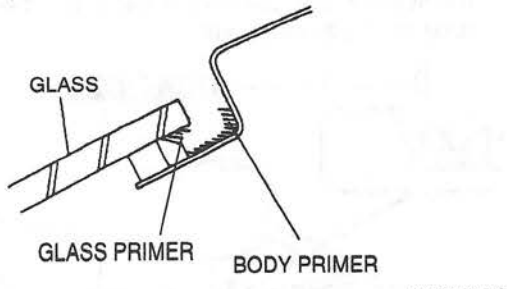

7. Insert a sealant tube cartridge into a sealant gun.
8. Apply a bead of repair sealant to a height **3 mm {0.12 in}** between the glass and the body.

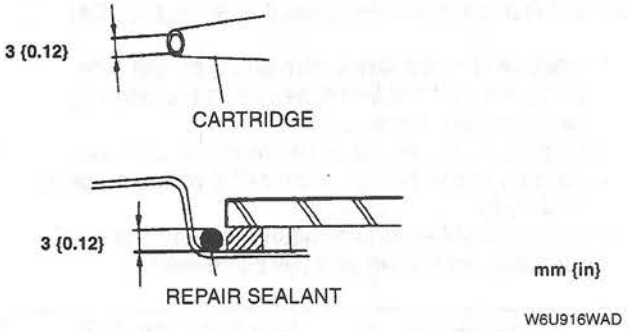

9. Reshape the repair sealant as shown if necessary.

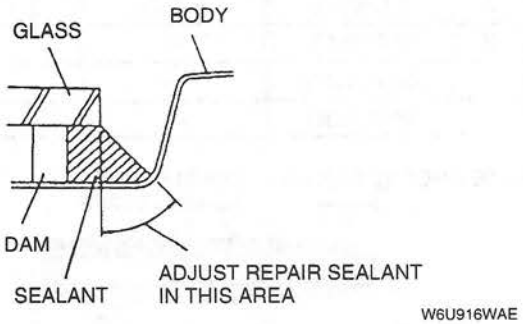

Caution

- **Once the sealant has hardened, you will not be able to install the molding. Install the windshield molding within the time shown below.**

Hardening time of sealant

Temperature	Surface hardening time	Time required until car can be put into service
5 °C {41 °F}	Approx. 1.5 h	Approx. 12 h
20 °C {68 °F}	Approx. 1 h	Approx. 4 h
35 °C {95 °F}	Approx. 10 min	Approx. 2 h

10. Align the marking on the molding with the inner side of the roof ditch (groove). (1)
11. Install the upper edge starting from the outer ends and moving inward (2).
12. Install the corners (3).
13. Install the sides, starting from the upper edge and moving downward, being careful to not pull out the corners (4).

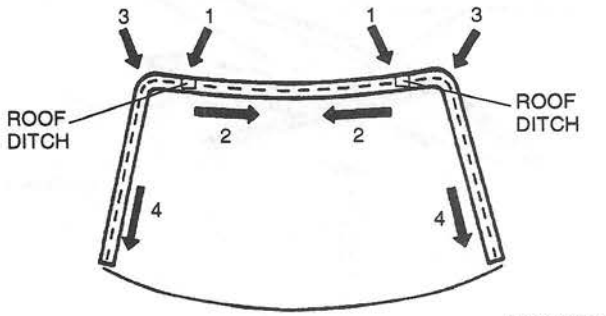

14. Use white gasoline to remove any sealant that oozes out.
15. Check for water leaks. If a leak is found, wipe the water off well and repeat the installation.
16. Install the windshield wiper arm and blade. (09–19 WINDSHIELD WIPER ARM AND BLADE REMOVAL/INSTALLATION.)

REAR WINDOW MOLDING REMOVAL

W6U916W11

Note
- The rear window molding is a replacement part.
- Remove the rear window glass when removing the rear window molding. (Refer to 09–12 REAR WINDOW GLASS REMOVAL.)

REAR WINDOW MOLDING INSTALLATION

W6U916W12

Note
- Install the rear window glass when installing the rear window molding (Refer to 09–12 REAR WINDOW GLASS INSTALLATION.)

FRONT BELTLINE MOLDING REMOVAL/INSTALLATION

W6U916W13

1. Remove the manual outside mirror or power outside mirror. (Refer to 09–12 MANUAL OUTSIDE MIRROR REMOVAL/INSTALLATION.) (Refer to 09–12 POWER OUTSIDE MIRROR REMOVAL/INSTALLATION.)
2. Remove the front door glass. (Refer to 09–12 FRONT DOOR GLASS AND GUIDE REMOVAL/INSTALLATION.)
3. Remove the screw.
4. Insert a tape-wrapped flathead screwdriver under the clip as shown.
5. Lift the flathead screwdriver and pull up on the front beltline molding to remove it.

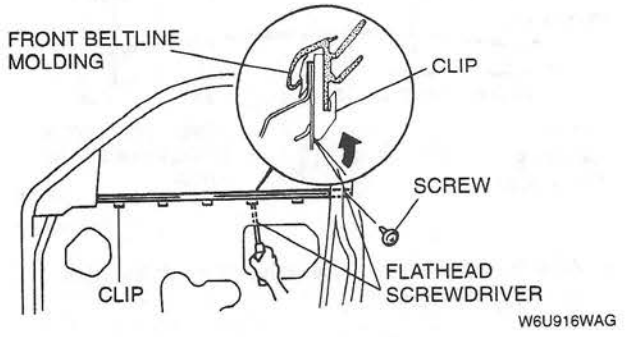

6. Install in the reverse order of removal.

REAR BELTLINE MOLDING REMOVAL/INSTALLATION

W6U916W14

1. Remove the rear door glass. (Refer to 09–12 REAR DOOR GLASS AND GUIDE REMOVAL/INSTALLATION.)
2. Remove the screw.
3. Insert a tape-wrapped flathead screwdriver under the clip as shown.
4. Lift the flathead screwdriver and pull up on the rear beltline molding to remove it.

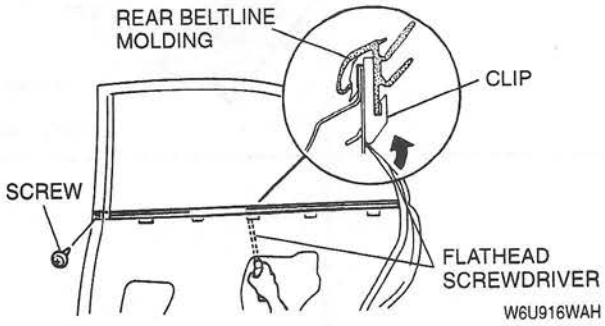

5. Install in the reverse order of removal.

ROOF MOLDING REMOVAL

W6U916W15

- Pull up each end of roof molding to remove it.

Note
- The roof molding is installed with double-sided adhesive tape. If the roof molding is difficult to remove, soften the double-sided adhesive tape by using a hot air blower.

ROOF MOLDING INSTALLATION

W6U916W16

Note
- The roof molding is a replacement part.

1. Remove the adhesive remaining on the body by using a razor knife.
2. Remove any grease or dirt from the adhesion surface of the body.
3. Apply repair sealant as shown.

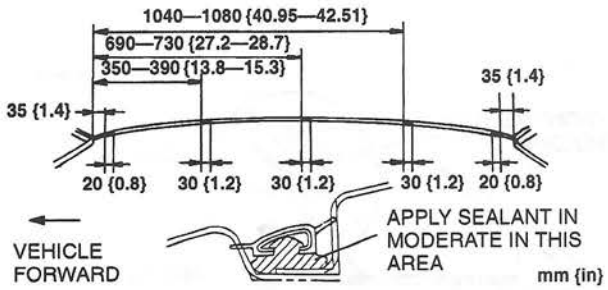

W6U916WAM

4. Attach double-sided adhesive tape to the roof molding as shown.

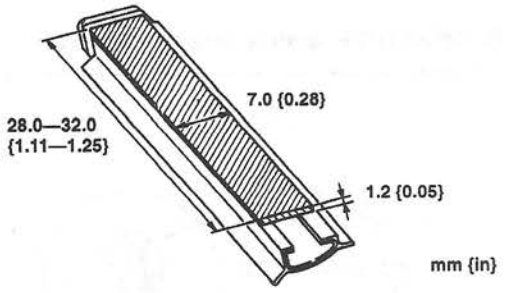

W6U916WAJ

5. Peel off the wax paper from the double-sided adhesive tape.
6. Align the rear end of the roof molding with the rear end of the roof molding groove. (1)
7. Install the roof molding, starting from rear and moving forward. (2)

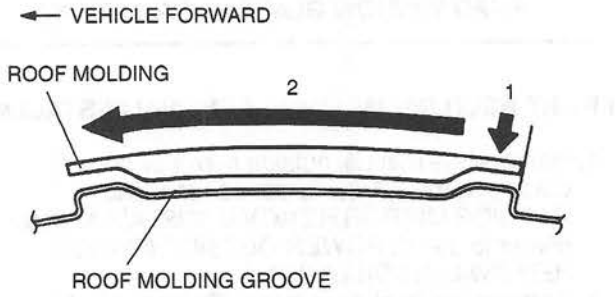

W6U916WAK

AIRDAM SKIRT REMOVAL/INSTALLATION

W6U916W17

1. Remove the bolts.
2. Remove the airdam skirt.
3. Install in the reverse order of removal.

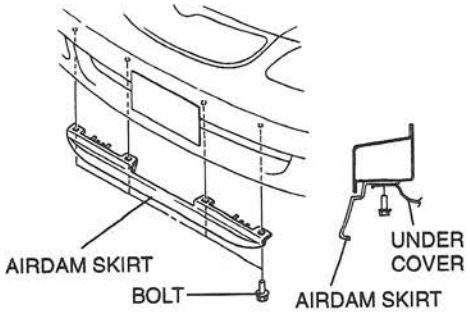

W6U916WAL

09–17 INTERIOR TRIM

DASHBOARD
REMOVAL/INSTALLATION 09–17–2
DASHBOARD
DISASSEMBLY/ASSEMBLY 09–17–3
BOOT PANEL
REMOVAL/INSTALLATION 09–17–4
BOOT PANEL
DISASSEMBLY/ASSEMBLY 09–17–4
CENTER LOWER PANEL
REMOVAL/INSTALLATION 09–17–4
CENTER PANEL
REMOVAL/INSTALLATION 09–17–5
COLUMN COVER
REMOVAL/INSTALLATION 09–17–5
FRONT CONSOLE
REMOVAL/INSTALLATION 09–17–5
REAR CONSOLE
REMOVAL/INSTALLATION 09–17–6
REAR CONSOLE
DISASSEMBLY/ASSEMBLY 09–17–6
GLOVE COMPARTMENT
REMOVAL/INSTALLATION 09–17–6
LOWER PANEL
REMOVAL/INSTALLATION 09–17–7
METER HOOD
REMOVAL/INSTALLATION 09–17–7
SIDE PANEL
REMOVAL/INSTALLATION 09–17–7
SIDE WALL REMOVAL/INSTALLATION 09–17–8
VENTILATOR GRILLE
REMOVAL/INSTALLATION 09–17–8
Left Side 09–17–8
Right Side 09–17–8
UNDER COVER
REMOVAL/INSTALLATION 09–17–8
FRONT DOOR TRIM
REMOVAL/INSTALLATION 09–17–9
FRONT DOOR TRIM
DISASSEMBLY/ASSEMBLY 09–17–9
REAR DOOR TRIM
REMOVAL/INSTALLATION 09–17–10
A-PILLAR TRIM
REMOVAL/INSTALLATION 09–17–10
B-PILLAR LOWER TRIM
REMOVAL/INSTALLATION 09–17–11
B-PILLAR UPPER TRIM
REMOVAL/INSTALLATION 09–17–11
C-PILLAR TRIM
REMOVAL/INSTALLATION 09–17–12
REAR PACKAGE TRIM
REMOVAL/INSTALLATION 09–17–12
FRONT SCUFF PLATE
REMOVAL/INSTALLATION 09–17–12
REAR SCUFF PLATE
REMOVAL/INSTALLATION 09–17–13
FRONT SIDE TRIM
REMOVAL/INSTALLATION 09–17–13
TRUNK END TRIM
REMOVAL/INSTALLATION 09–17–13
TRUNK COMPARTMENT COVERING
REMOVAL/INSTALLATION 09–17–14
HEADLINER
REMOVAL/INSTALLATION 09–17–14
FLOOR COVERING
REMOVAL/INSTALLATION 09–17–15

DASHBOARD REMOVAL/INSTALLATION

W6U917W01

1. Disconnect the negative battery cable.
2. Remove the driver-side air bag module. (Refer to 08–10 DRIVER-SIDE AIR BAG MODULE REMOVAL/INSTALLATION.)
3. Remove the passenger-side air bag module. (Refer to 08–10 PASSENGER-SIDE AIR BAG MODULE REMOVAL/INSTALLATION.)
4. Remove the steering wheel. (Refer to 06–12 STEERING WHEEL AND COLUMN REMOVAL/INSTALLATION.)
5. Remove the column cover.
6. Remove the side wall. (Refer to 09–17 SIDE WALL REMOVAL/INSTALLATION.)
7. Remove the front side trim. (Refer to 09–17 FRONT SIDE TRIM REMOVAL/INSTALLATION.)
8. Remove the under cover.
9. Remove the lower panel. (Refer to 09–17 LOWER PANEL REMOVAL/INSTALLATION.)
10. Remove the installation nuts then shift the assembled steering shaft in the dashboard. (Refer to 06–12 STEERING WHEEL AND COLUMN REMOVAL/INSTALLATION.)
11. Remove the PCM. (Refer to 01–40 PCM REMOVAL/INSTALLATION.)
12. Remove the A-pillar trim.
13. Remove in the order indicated in the table.
14. Install in the reverse order of removal.

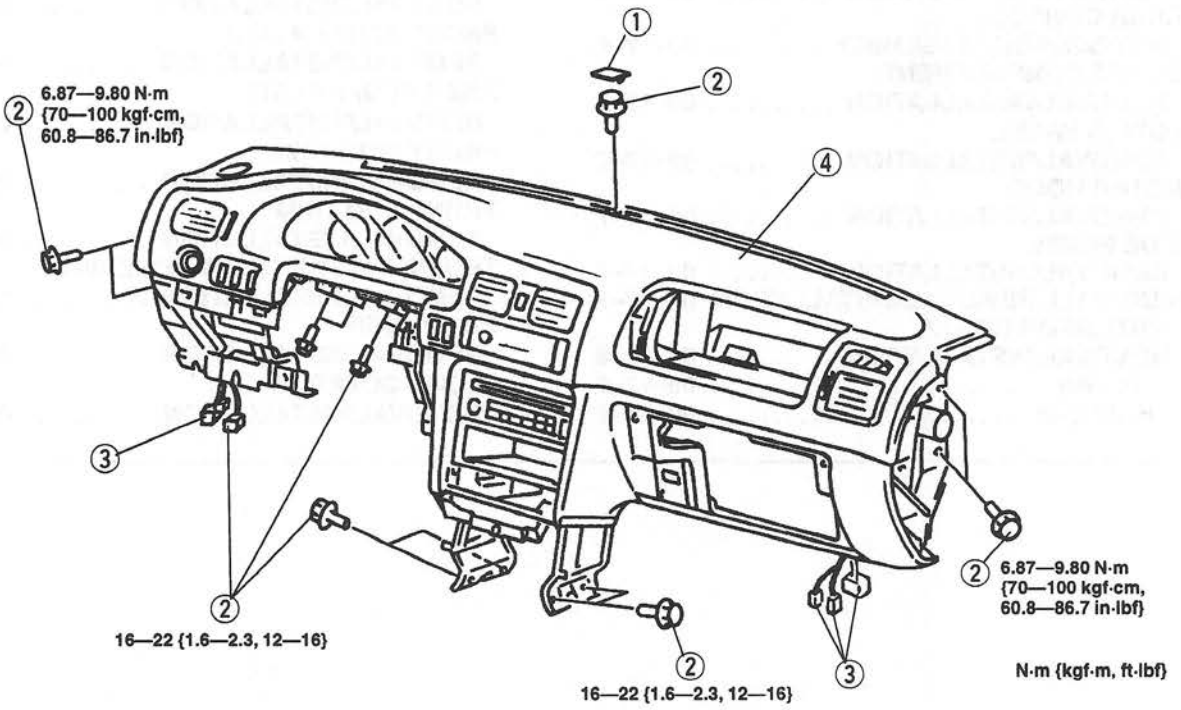

W6U917WA0

1	Cover
2	Bolt

3	Connector
4	Dashboard

DASHBOARD DISASSEMBLY/ASSEMBLY

W6U917W02

1. Remove the instrument cluster. (Refer to 09–22 INSTRUMENT CLUSTER REMOVAL/INSTALLATION.)
2. Remove the heater control unit. (Refer to 07–40 HEATER CONTROL UNIT REMOVAL/INSTALLATION.)
3. Remove the audio unit. (Refer to 09–20 AUDIO UNIT REMOVAL/INSTALLATION.)
4. Disassemble in the order indicated in the table.
5. Assemble in the reverse order of disassembly.

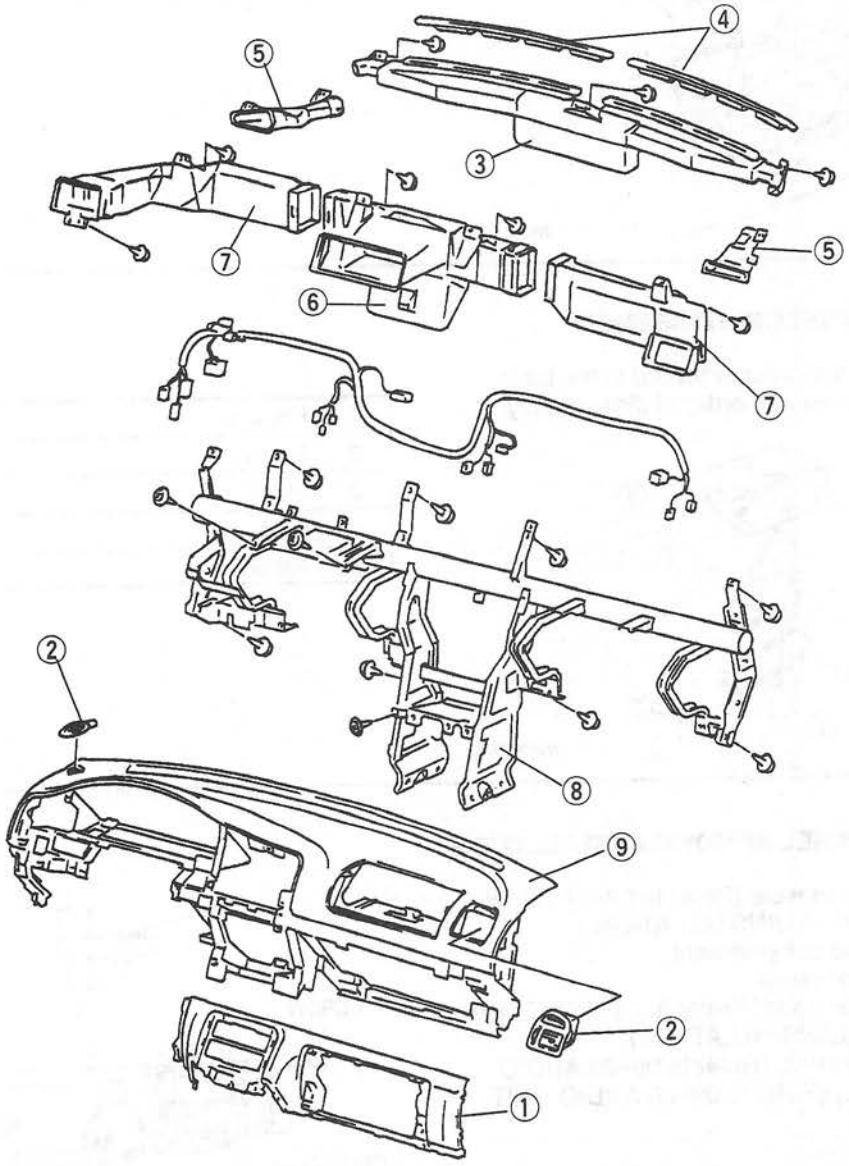

W6U917WA1

1	Center lower panel
2	Ventilator grille
3	Defroster duct
4	Defroster grille
5	Side demister duct

6	Center duct
7	Duct
8	Dashboard member
9	Dashboard crash pad

BOOT PANEL REMOVAL/INSTALLATION

W6U917W03

1. Pull the boot panel upward to disengage clips A and pins B from the rear console.

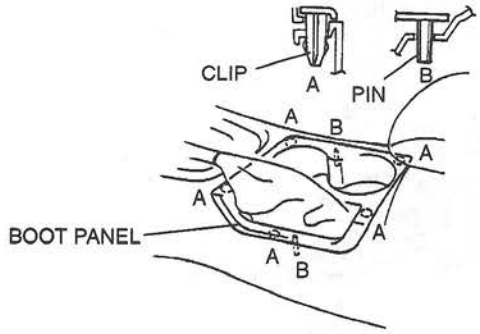

W6U917WA2

2. Install in the reverse order of removal.

BOOT PANEL DISASSEMBLY/ASSEMBLY

W6U917W04

1. Disassemble in the order indicated in the table.
2. Assemble in the reverse order of disassembly.

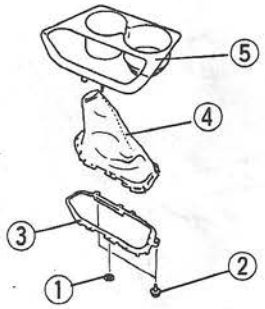

W6U917WA3

1	Fastener
2	Screw
3	Plate
4	Boot
5	Panel

CENTER LOWER PANEL REMOVAL/INSTALLATION

W6U917W05

1. Remove the rear console (Refer to 09–17 REAR CONSOLE REMOVAL/INSTALLATION.)
2. Remove the glove compartment.
3. Remove the under cover.
4. Remove the meter hood. (Refer to 09–17 METER HOOD REMOVAL/INSTALLATION.)
5. Remove the audio unit. (Refer to 09–20 AUDIO UNIT REMOVAL.) (Refer to 09–20 AUDIO UNIT INSTALLATION.)
6. Remove the screws.
7. Pull the center lower panel to disengage clips A and B from the dashboard.

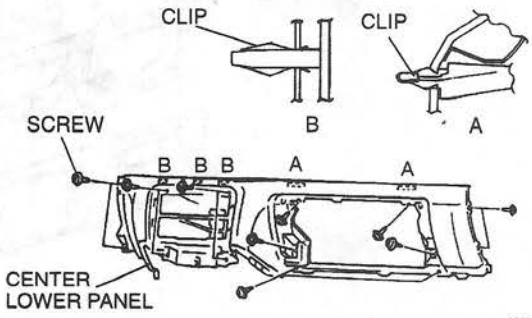

W6U917WA4

8. Install in the reverse order of removal.

CENTER PANEL REMOVAL/INSTALLATION

W6U917W06

1. Disconnect the negative battery cable.
2. Remove the boot panel.
3. Remove the front console.
4. Remove the screws.
5. Disconnect the connector.
6. Pull the center panel to disengage clips A and pins B from the dashboard.
7. Install in the reverse order of removal.

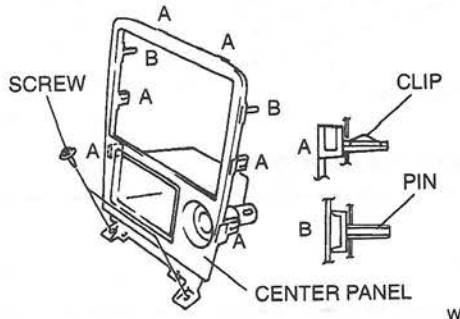

W6U917WA5

COLUMN COVER REMOVAL/INSTALLATION

W6U917W07

1. Remove the screws to remove the column cover.
2. Install in the reverse order of removal.

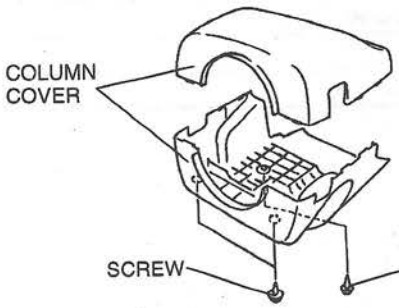

W6U917WA6

FRONT CONSOLE REMOVAL/INSTALLATION

W6U917W08

1. Remove the shift lever knob if equipped with the MTX.
2. Remove the boot panel.
3. Push up clips A and pin B from back side of the front console to remove it.
4. Install in the reverse order of removal.

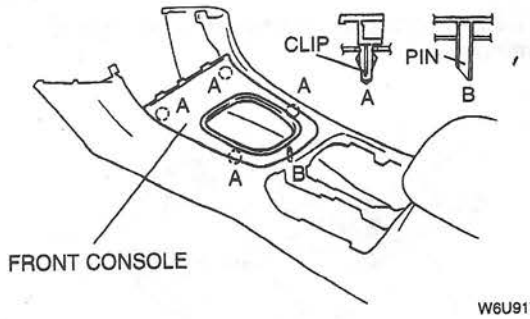

W6U917WA7

REAR CONSOLE REMOVAL/INSTALLATION

W6U917W09

Note
- To remove the installation screws in the middle of the console, use an L-shape screwdriver.

1. Remove the boot panel.
2. Remove the front console.
3. Remove the center panel.
4. Remove the screws to remove the rear console.

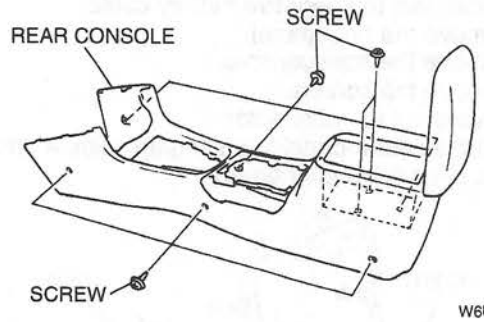

W6U917WA8

5. Install in the reverse order of removal.

REAR CONSOLE DISASSEMBLY/ASSEMBLY

W6U917W10

1. Disassemble in the order indicated in the table.
2. Assemble in the reverse order of disassembly.

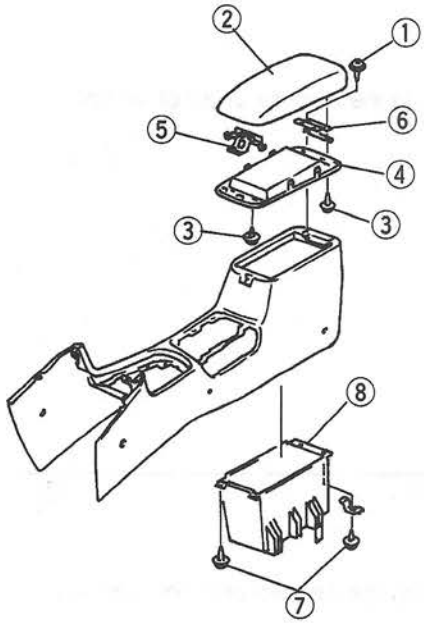

W6U917WA9

1	Screw A
2	Rear console lid
3	Screw B
4	Rear console lid inner
5	Rear console lid lock
6	Rear console lid hinge
7	Screw C
8	Rear console box

GLOVE COMPARTMENT REMOVAL/INSTALLATION

W6U917W11

1. Open the glove compartment and pull up on the right side to disengage hook A from the center lower panel.

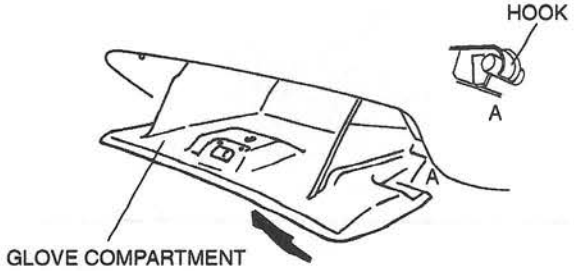

W6U917WAA

2. Slide the glove compartment to the right to remove it.

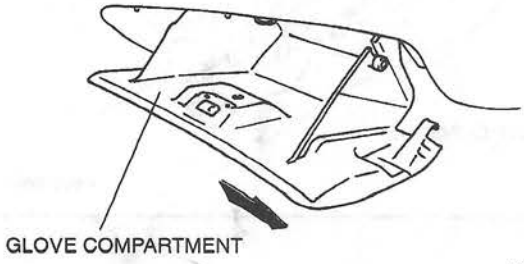

W6U917WAB

3. Install in the reverse order of removal.

LOWER PANEL REMOVAL/INSTALLATION

W6U917W12

1. Remove the side panel.
2. Remove the hood release lever installation nut.
3. Remove the screws.
4. Pull the lower panel to disengage clips A from the dashboard.
5. Disconnect the immobilizer unit connector to remove the lower panel.

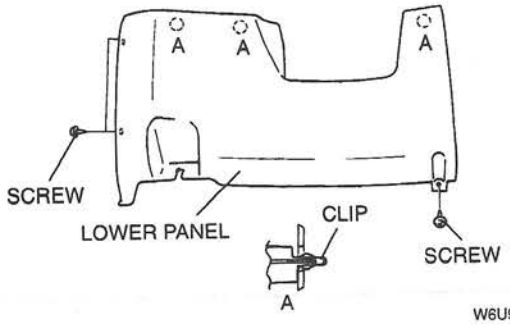

W6U917WAC

6. Install in the reverse order of removal.

METER HOOD REMOVAL/INSTALLATION

W6U917W13

1. Disconnect the negative battery cable.
2. Remove the driver's side side panel.
3. Remove the lower panel.
4. Remove the screws.
5. Pull the meter hood to disengage clips A from the dashboard.
6. Disconnect the connectors to remove the meter hood.

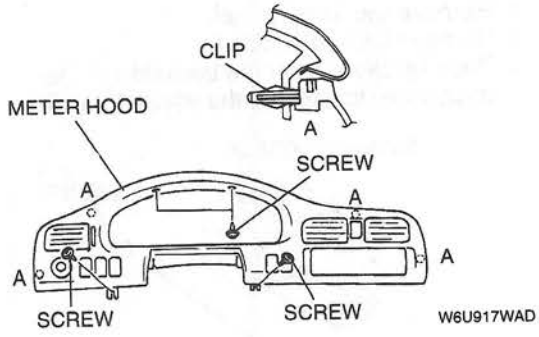

W6U917WAD

7. Install in the reverse order of removal.

SIDE PANEL REMOVAL/INSTALLATION

W6U917W14

1. Pull the front edge of the side panel to disengage clips A and pin B from the dashboard.
2. Pull the side panel to disengage hooks C from the dashboard.

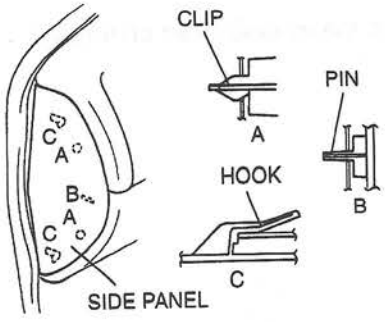

W6U917WAE

3. Install in the reverse order of removal.

SIDE WALL REMOVAL/INSTALLATION

W6U917W15

1. Remove the rear console. (Refer to 09–17 REAR CONSOLE REMOVAL/INSTALLATION.)
2. Remove the screws and fasteners.
3. Slide the side wall indicated by the arrows to disengage hook A from the dashboard.

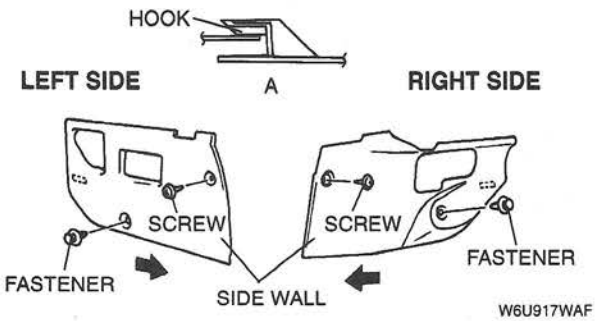

W6U917WAF

4. Install in the reverse order of removal.

VENTILATOR GRILLE REMOVAL/INSTALLATION

W6U917W16

Left Side

1. Remove the side panel.
2. Remove the lower panel.
3. Remove the meter hood.
4. Push up clip A from the backside of the dashboard to remove the ventilator grille.

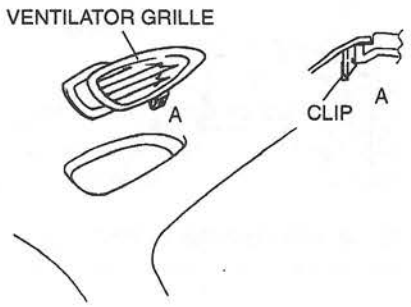

W6U917WAG

5. Install in the reverse order of removal.

Right Side

1. Remove the glove compartment.
2. Push up hooks A and B from the backside of the dashboard to remove the ventilator grille.

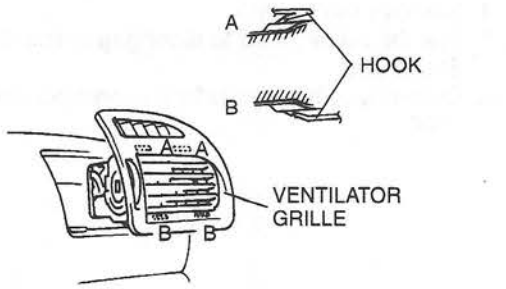

W6U917WAH

3. Install in the reverse order of removal.

UNDER COVER REMOVAL/INSTALLATION

W6U917W17

1. Remove the fasteners to remove the under cover.

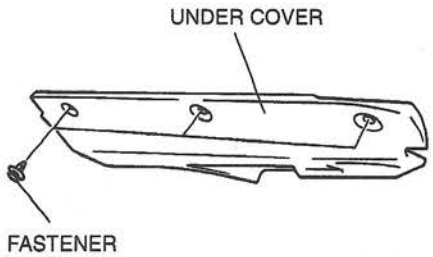

W6U917WAJ

2. Install in the reverse order of removal.

FRONT DOOR TRIM REMOVAL/INSTALLATION

1. Disconnect the negative battery cable.
2. Remove the regulator handle if equipped with a manual window.
3. Remove the inner garnish.
4. Remove the screw to remove the inner handle.
5. Turn over the recess cover to remove the screw.
6. Remove the screw.
7. Remove the fasteners.
8. Pull the front door trim to disengage clips A from the body.
9. Pull the front door trim upward to disengage hooks B from the body.
10. Disconnect the trunk lid opener switch connector.
11. Disconnect the connector if equipped with a power window.

W6U917W18

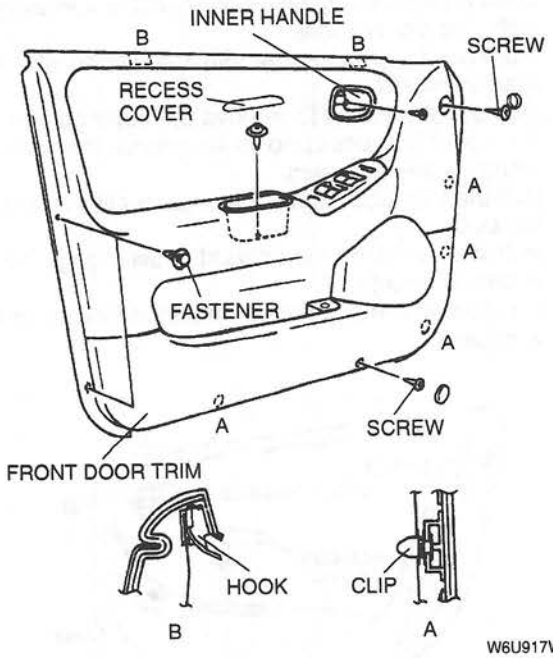

W6U917WAK

12. Install in the reverse order of removal.

FRONT DOOR TRIM DISASSEMBLY/ASSEMBLY

1. Disassemble in the order indicated in the table.
2. Assemble in the reverse order of disassembly.

W6U917W19

1	Screw
2	Pocket
3	Door cover trim
4	Pull handle
5	Nut
6	Power window main switch

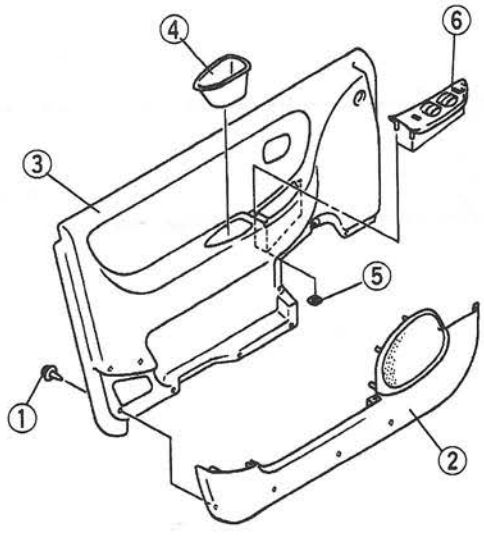

W6U917WAL

REAR DOOR TRIM REMOVAL/INSTALLATION

W6U917W20

1. Disconnect the negative battery cable if equipped with a power window.
2. Remove the regulator handle if equipped with a manual window.
3. Remove the screw to remove the inner handle.
4. Turn over the recess cover to remove the screw.
5. Remove the fasteners.
6. Pull the rear door trim to disengage clips A from the body.
7. Pull the rear door trim upward to disengage hooks B from the body.
8. Disconnect the connector if equipped with a power window.
9. Install in the reverse order of removal.

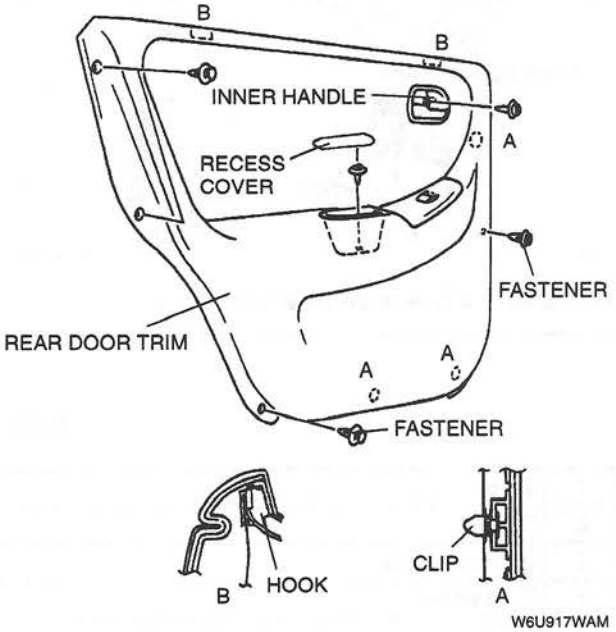

W6U917WAM

A-PILLAR TRIM REMOVAL/INSTALLATION

W6U917W21

1. Turn over the seaming welt.
2. Pull the A-pillar trim to disengage clips A and pin B from the body.
3. Pull the A-pillar trim upward to disengage hook C from the body.
4. Pull the A-pillar trim upward to disengage hook D from the dashboard.
5. Install in the reverse order of removal.

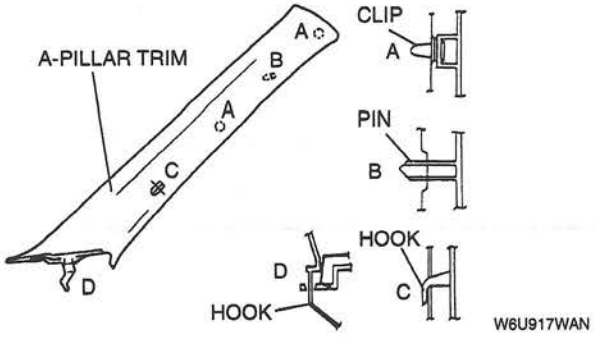

W6U917WAN

B-PILLAR LOWER TRIM REMOVAL/INSTALLATION

1. Remove the front scuff plate.
2. Remove the rear scuff plate. (Refer to 09–17 REAR SCUFF PLATE REMOVAL/INSTALLATION.)
3. Bend sec. A–A to remove one side of the B-pillar lower trim.
4. Pull the B-pillar lower trim to disengage pin B from the body.

W6U917W22

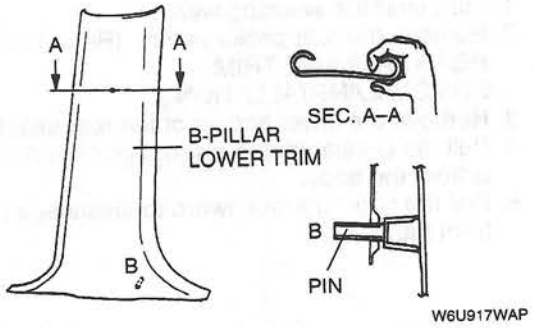

W6U917WAP

5. Install in the reverse order of removal.

B-PILLAR UPPER TRIM REMOVAL/INSTALLATION

1. Remove the upper anchor of the front seat belt. (Refer to 08–11 FRONT SEAT BELT REMOVAL/INSTALLATION.)
2. Remove the B-pillar lower trim. (Refer to 09–17 B-PILLAR LOWER TRIM REMOVAL/INSTALLATION.)
3. Turn over the seaming welt.
4. Pull the B-pillar upper trim to disengage clip and pin A from the body.
5. Pull the B-pillar upper trim upward to disengage hooks B from the body.

W6U917W23

6. Install in the reverse order of removal.

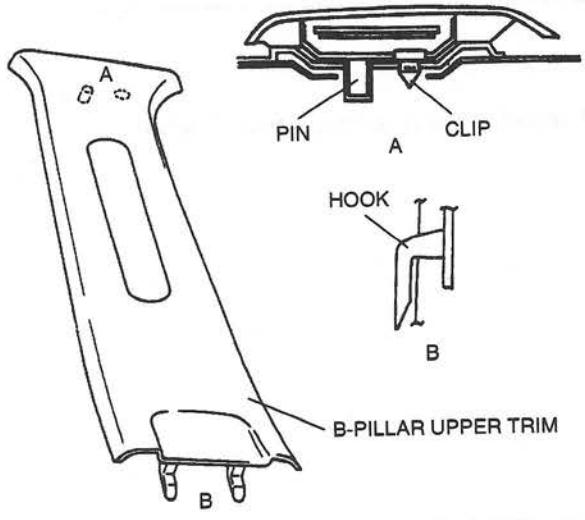

W6U917WAQ

C-PILLAR TRIM REMOVAL/INSTALLATION

1. Turn over the seaming welt.
2. Remove the rear package trim. (Refer to 09–17 REAR PACKAGE TRIM REMOVAL/INSTALLATION.)
3. Remove the lower anchor of the rear seat belt.
4. Pull the C-pillar trim to disengage clips A and pin B from the body.
5. Pull the C-pillar trim upward to disengage hook C from the body.

W6U917W24

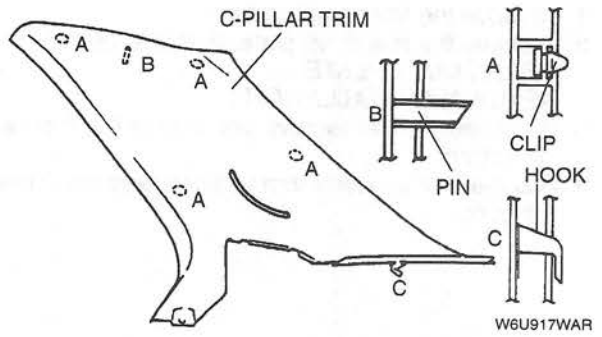

W6U917WAR

6. Install in the reverse order of removal.

REAR PACKAGE TRIM REMOVAL/INSTALLATION

1. Disconnect the negative battery cable.
2. Remove the rear side seat. (Refer to 09–13 REAR SEAT REMOVAL/INSTALLATION.)
3. Remove the high-mount brake light.
4. Remove the fasteners.
5. Push up clips A from inside of trunk compartment to disengage from the body.
6. Pull the rear package trim to disengage hooks B from the body.

W6U917W25

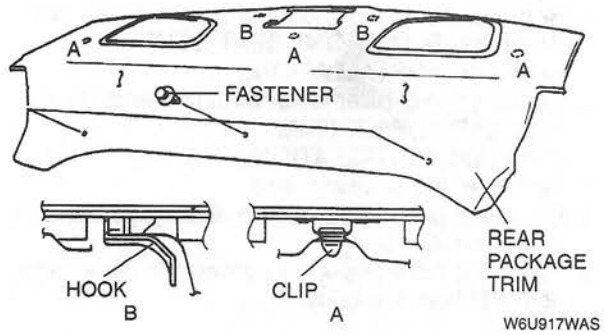

W6U917WAS

7. Install in the reverse order of removal.

FRONT SCUFF PLATE REMOVAL/INSTALLATION

1. Pull the front scuff plate to disengage clips A and pin B from the body.

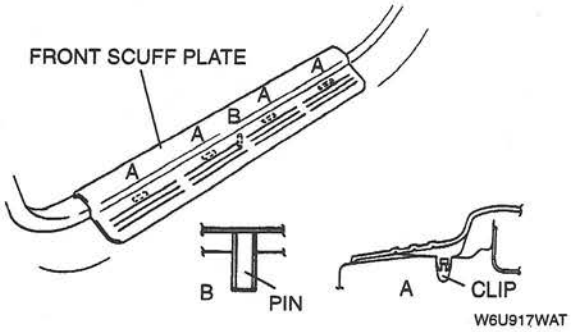

W6U917WAT

W6U917W26

2. Install in the reverse order of removal.

REAR SCUFF PLATE REMOVAL/INSTALLATION

W6U917W27

1. Remove the rear seat cushion.
2. Remove the fastener.
3. Pull the rear scuff plate to disengage clips A and pin B from the body.
4. Install in the reverse order of removal.

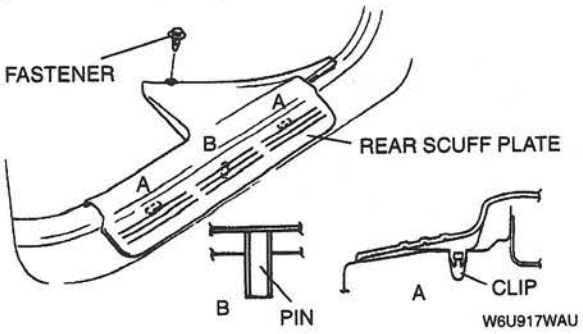

FRONT SIDE TRIM REMOVAL/INSTALLATION

W6U917W28

1. Remove the front scuff plate.
2. Remove the fasteners.
3. Slide the front side trim to disengage hook A from the body.
4. Install in the reverse order of removal.

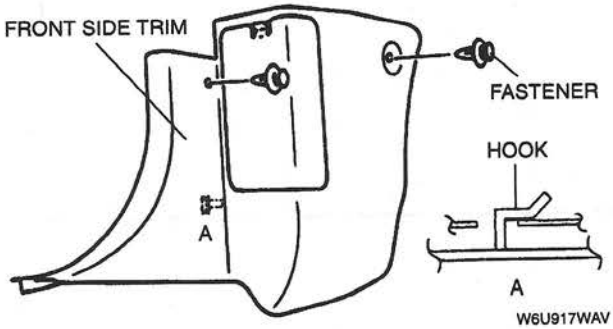

TRUNK END TRIM REMOVAL/INSTALLATION

W6U917W29

1. Remove the fasteners.
2. Pull the trunk end trim upward to disengage clips A and pins B from the body.
3. Install in the reverse order of removal.

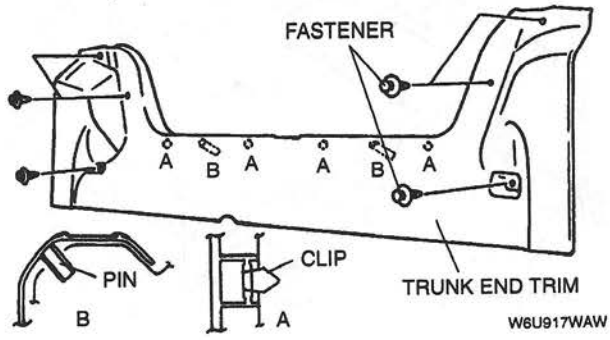

TRUNK COMPARTMENT COVERING REMOVAL/INSTALLATION

W6U917W30

1. Remove the rear side seat. (Refer to 09–13 REAR SEAT REMOVAL/INSTALLATION.)
2. Remove the center board and the spare tire.
3. Remove the trunk end trim. (Refer to 09–17 TRUNK END TRIM REMOVAL/INSTALLATION.)
4. Remove the fasteners.
5. Disengage the part of trunk compartment covering B from the corner plate to remove it.
6. Install in the reverse order of removal.

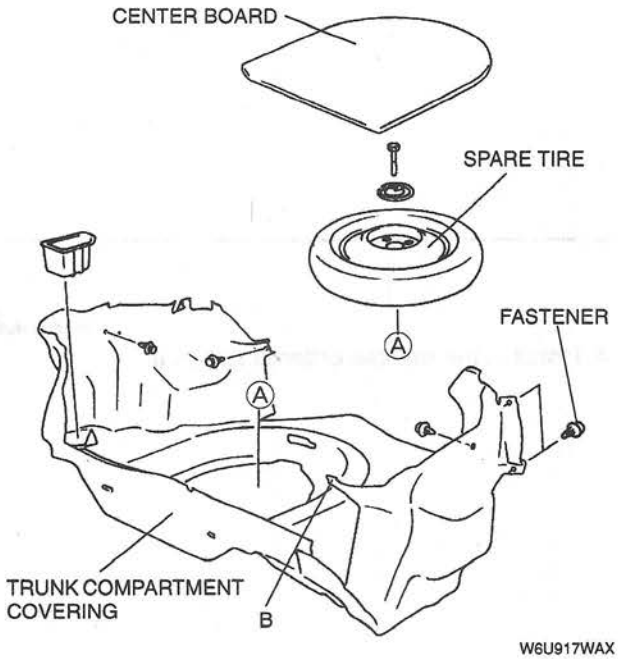

W6U917WAX

HEADLINER REMOVAL/INSTALLATION

W6U917W31

1. Disconnect the negative battery cable.
2. Remove the interior light. (Refer to 09–18 INTERIOR LIGHT REMOVAL/INSTALLATION.)
3. Remove the sunroof switch. (Refer to 09–15 SUNROOF SWITCH REMOVAL/INSTALLATION.)
4. Remove the seaming welt.
5. Remove the A-pillar trim. (Refer to 09–17 A-PILLAR TRIM REMOVAL/INSTALLATION.)
6. Remove the B-pillar upper trim. (Refer to 09–17 B-PILLAR UPPER TRIM REMOVAL/INSTALLATION.)
7. Remove the C-pillar trim. (Refer to 09–17 C-PILLAR TRIM REMOVAL/INSTALLATION.)
8. Remove the rear console. (Refer to 09–17 REAR CONSOLE REMOVAL/INSTALLATION.)
9. Remove the sunvisors and the assist handles.
10. Remove the fasteners.

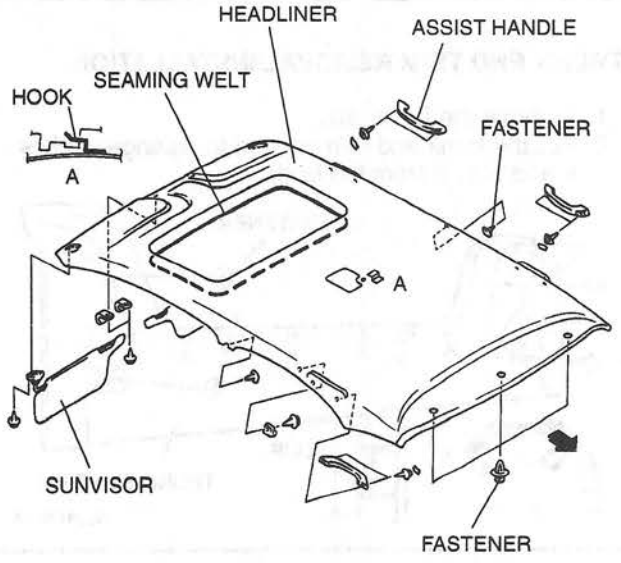

W6U917WAY

11. Move the shift lever to 4th gear if equipped with MTX. Move the shift lever to 1 position if equipped with ATX.

12. Slide the seat back to the maximum rearward position.
13. Recline both seat backs to the maximum reclined position.
14. Slide the headliner towards the rear of the vehicle to disengage the headliner hook A from the roof.
15. Remove the headliner from the vehicle through the passenger's side front door at a 45° angle, with the right edge at the lower right corner and the left edge at the upper left corner of the door opening.
16. Install in the reverse order of removal.

FLOOR COVERING REMOVAL/INSTALLATION

1. Disconnect the negative battery cable.
2. Remove the front seat. (Refer to 09–13 FRONT SEAT REMOVAL/INSTALLATION.)
3. Remove the rear seat cushion.
4. Remove the dashboard. (Refer to 09–17 DASHBOARD REMOVAL/INSTALLATION.)
5. Remove the B-pillar lower trim. (Refer to 09–17 B-PILLAR LOWER TRIM REMOVAL/INSTALLATION.)
6. Remove the selector cable and the interlock cable if equipped with ATX. (Refer to 05–14 SHIFT MECHANISM REMOVAL/INSTALLATION.)
7. Remove the SAS unit bracket. (Refer to 08–10 SAS UNIT BRACKET REMOVAL/INSTALLATION.)
8. Remove the set plate. (Refer to 06–12 STEERING WHEEL AND COLUMN REMOVAL/INSTALLATION.)
9. Remove the audio amplifier. (Refer to 09–20 AUDIO AMPLIFIER REMOVAL/INSTALLATION.)
10. Remove the fasteners.
11. Disengage the side hooks to remove the floor covering.

W6U917W32

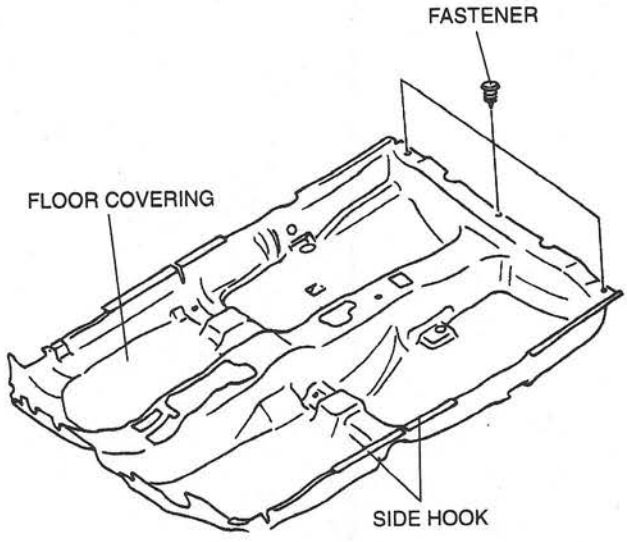

W6U917WAZ

12. Install in the reverse order of removal.

09–18 LIGHTING SYSTEMS

HEADLIGHT ADJUSTMENT 09–18–1
HEADLIGHT REMOVAL/INSTALLATION 09–18–2
HEADLIGHT BULB REMOVAL/INSTALLATION 09–18–2
FRONT COMBINATION LIGHT REMOVAL/INSTALLATION 09–18–3
REAR COMBINATION LIGHT REMOVAL/INSTALLATION 09–18–3
HIGH-MOUNT BRAKE LIGHT REMOVAL/INSTALLATION 09–18–4
HIGH-MOUNT BRAKE LIGHT BULB REMOVAL/INSTALLATION 09–18–4
LICENSE PLATE LIGHT REMOVAL/INSTALLATION 09–18–4
License Plate Light Removal Note 09–18–4
BACK-UP LIGHT SWITCH REMOVAL/INSTALLATION 09–18–5
BACK-UP LIGHT SWITCH INSPECTION 09–18–5
COMBINATION SWITCH REMOVAL/INSTALLATION 09–18–5
COMBINATION SWITCH DISASSEMBLY/ASSEMBLY 09–18–6
LIGHT SWITCH REMOVAL/INSTALLATION 09–18–6
LIGHT SWITCH INSPECTION 09–18–7
HAZARD WARNING SWITCH REMOVAL/INSTALLATION 09–18–7
HAZARD WARNING SWITCH INSPECTION 09–18–8
HEADLIGHT HIGH RELAY REMOVAL/INSTALLATION 09–18–8
Canada Only 09–18–8
HEADLIGHT HIGH RELAY INSPECTION 09–18–8
Canada Only 09–18–8
HEADLIGHT RELAY INSPECTION 09–18–9
TNS RELAY INSPECTION 09–18–9
FLASHER UNIT REMOVAL/INSTALLATION 09–18–9
FLASHER UNIT INSPECTION 09–18–10
Terminal Voltage List (Reference) 09–18–10
INTERIOR LIGHT REMOVAL/INSTALLATION 09–18–10
Lens Removal Note 09–18–11
INTERIOR LIGHT INSPECTION 09–18–11
VANITY MIRROR ILLUMINATION REMOVAL/INSTALLATION 09–18–12
VANITY MIRROR ILLUMINATION INSPECTION 09–18–12
DOOR SWITCH REMOVAL/INSTALLATION 09–18–13
DOOR SWITCH INSPECTION 09–18–13
TRUNK COMPARTMENT LIGHT SWITCH INSPECTION 09–18–13
PANEL LIGHT CONTROL SWITCH REMOVAL/INSTALLATION 09–18–14
PANEL LIGHT CONTROL SWITCH INSPECTION 09–18–15
Terminal Voltage List (Reference) 09–18–15

HEADLIGHT ADJUSTMENT

W6U918W01

1. Adjust the tire air pressure to the specification.
2. Position the unloaded vehicle on a flat, level surface.
3. Seat one person in the driver's seat.
4. Adjust the headlights by turning the adjusting screws as shown in the figure. Use a "HOPPY" brand aimer or equivalent to aim the headlights to specification numbers **15H20V** (found on the headlight lens).

Note

- If the adjusting screws are tightened first, then loosened, they will continue to loosen when the vehicle is in motion and may cause the headlights to become misaligned.

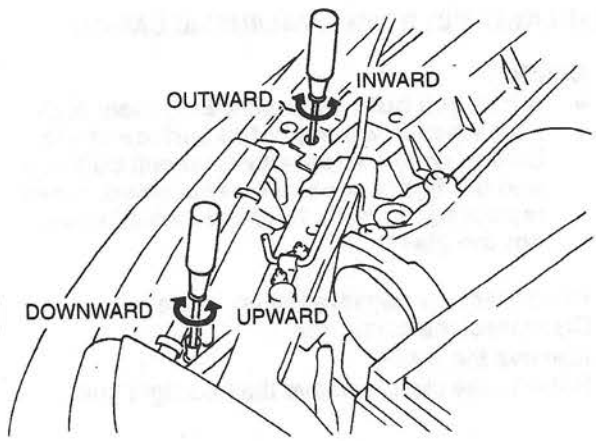

W6U918WA0

HEADLIGHT REMOVAL/INSTALLATION

W6U918W02

Caution

- **When you slide the headlight, the headlight may hit the edge of the front fender panel. This may cause scratches on the front fender panel. To avoid this, attach protective tape to the edge of the front fender panel.**

1. Disconnect the negative battery cable.
2. Remove the front combination light.
3. Remove in the order indicated in the table.
4. Install in the reverse order of removal.
5. Adjust the headlight aiming. (Refer to 09–18 HEADLIGHT ADJUSTMENT.)

1	Bolt
2	Connector
3	Headlight

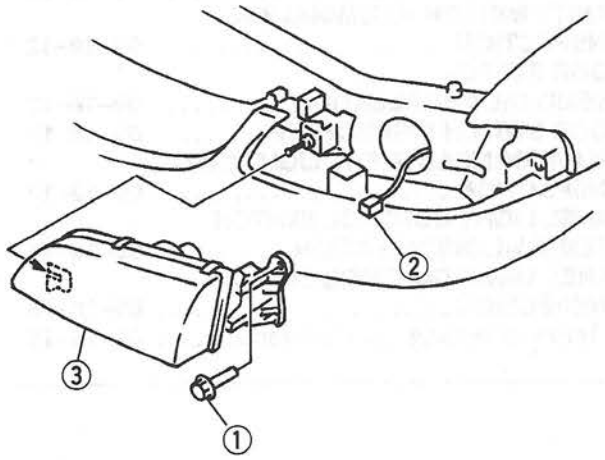

W6U918WA1

HEADLIGHT BULB REMOVAL/INSTALLATION

W6U918W03

Caution

- **A halogen bulb generates extremely high heat when it is used. If the surface of the bulb is soiled, excessive heat will build up and the light's life will be shortened. When replacing the bulb, hold the metal flange, not the glass.**

1. Disconnect the negative battery cable.
2. Disconnect the connector.
3. Remove the cover.
4. Release the clip to remove the headlight bulb.

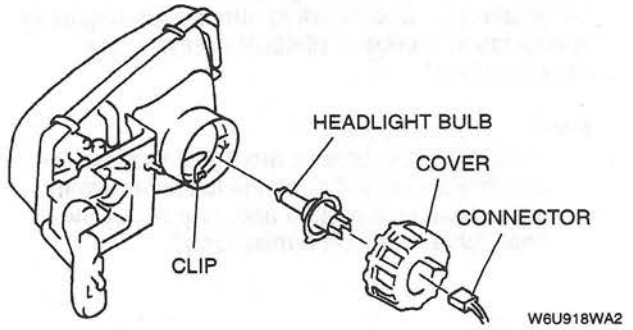

W6U918WA2

5. Install in the reverse order of removal.

FRONT COMBINATION LIGHT REMOVAL/INSTALLATION

W6U918W04

1. Disconnect the negative battery cable.
2. Remove in the order indicated in the table.
3. Install in the reverse order of removal.

1	Screw
2	Front combination light
3	Connector
4	Socket
5	Front combination light bulb

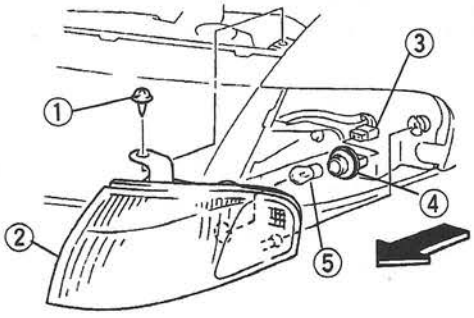

W6U918WA3

REAR COMBINATION LIGHT REMOVAL/INSTALLATION

W6U918W05

1. Disconnect the negative battery cable.
2. Partially peel off the trunk compartment covering. (Refer to 09–17 TRUNK COMPARTMENT COVERING REMOVAL/INSTALLATION.)
3. Remove in the order indicated in the table.
4. Install in the reverse order of removal.

1	Connector
2	Nut
3	Rear combination light
4	Socket
5	Brake light/taillight bulb
6	Back-up light bulb
7	Rear turn light bulb

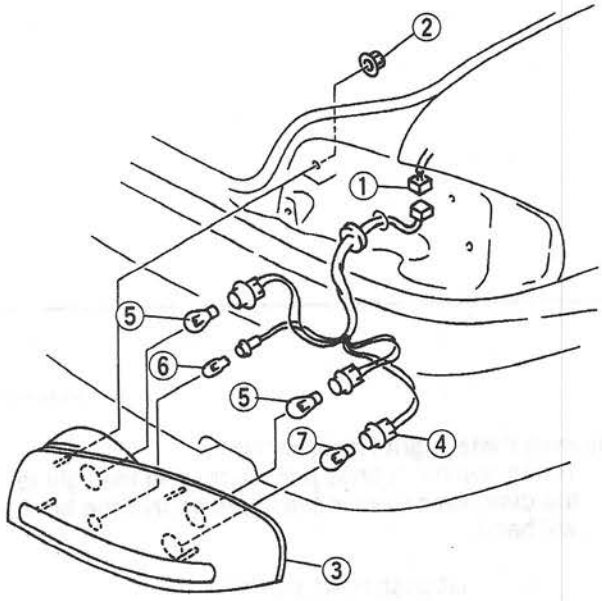

W6U918WA4

HIGH-MOUNT BRAKE LIGHT REMOVAL/INSTALLATION

W6U918W06

1. Disconnect the negative battery cable.
2. Push the hooks of the high-mount brake light to remove the light.
3. Disconnect the connector.

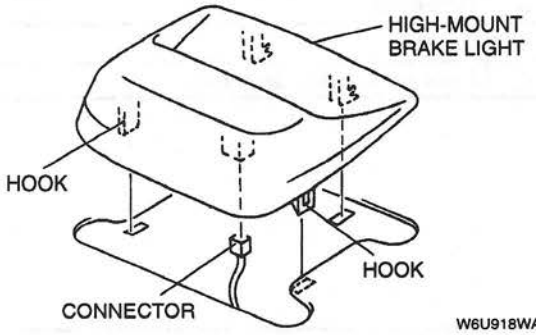

W6U918WA5

4. Install in the reverse order of removal.

HIGH-MOUNT BRAKE LIGHT BULB REMOVAL/INSTALLATION

W6U918W07

1. Disconnect the negative battery cable.
2. Remove the high-mount brake light.
3. Remove the socket to remove the high-mount brake light bulb.

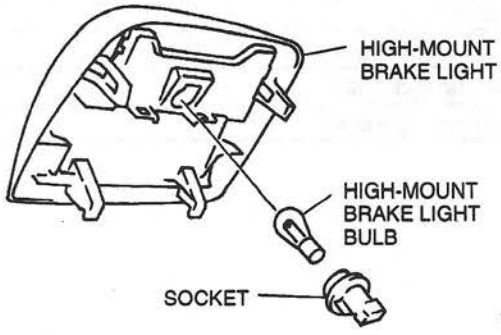

W6U918WA6

4. Install in the reverse order of removal.

LICENSE PLATE LIGHT REMOVAL/INSTALLATION

W6U918W08

1. Disconnect the negative battery cable.
2. Remove in the order indicated in the table.
3. Install in the reverse order of removal.

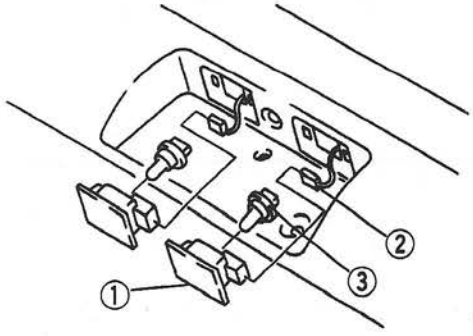

W6U918WA7

1	License plate light ☞ Removal Note
2	Connector
3	License plate light bulb

License Plate Light Removal Note

- To remove the license plate light, shift the light to the direction shown in the figure so that the hook will bend.

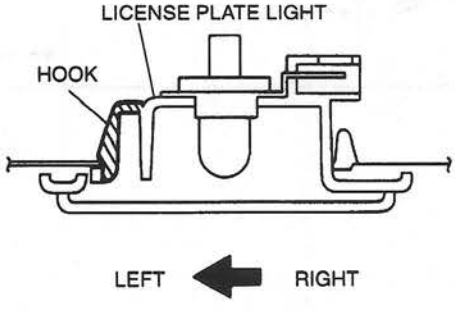

W6U918WA8

BACK-UP LIGHT SWITCH REMOVAL/INSTALLATION

W6U918W09

1. Disconnect the negative battery cable.
2. Disconnect the connector.
3. Remove the back-up light switch.

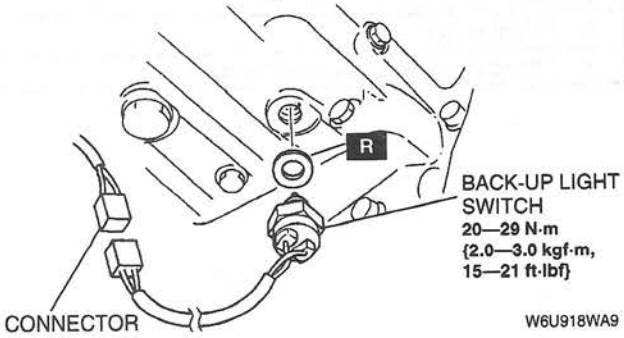

W6U918WA9

4. Install in the reverse order of removal.

BACK-UP LIGHT SWITCH INSPECTION

W6U918W10

1. Disconnect the back-up light switch connector.
2. Check for continuity between the back-up light switch terminals by using an ohmmeter.

○—○ : Continuity

Shift lever position	Terminal	
	A	B
Reverse	○	○
Other		

W6U918WB4

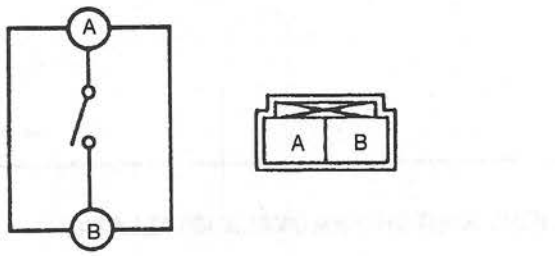

W6U918WAA

3. If not as specified, replace the back-up light switch.

COMBINATION SWITCH REMOVAL/INSTALLATION

W6U918W11

1. Disconnect the negative battery cable.
2. Remove the driver-side air bag module. (Refer to 08–10 DRIVER-SIDE AIR BAG MODULE REMOVAL/INSTALLATION.)
3. Remove the steering wheel. (Refer to 06–12 STEERING WHEEL AND COLUMN REMOVAL/INSTALLATION.)
4. Remove the column cover.
5. Remove the clock spring. (Refer to 08–10 CLOCK SPRING ADJUSTMENT.)
6. Remove in the order indicated in the figure.
7. Install in the reverse order of removal.

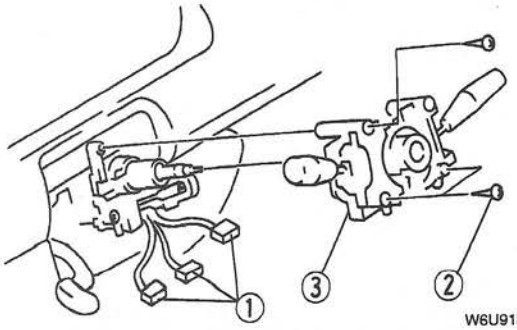

W6U918WAB

1	Connector
2	Screw
3	Combination switch

COMBINATION SWITCH DISASSEMBLY/ASSEMBLY

W6U918W12

1. Disassemble in the order indicated in the table.
2. Assemble in the reverse order of disassembly.

1	Cancel cam
2	Spring
3	Light switch
4	Windshield wiper and washer switch

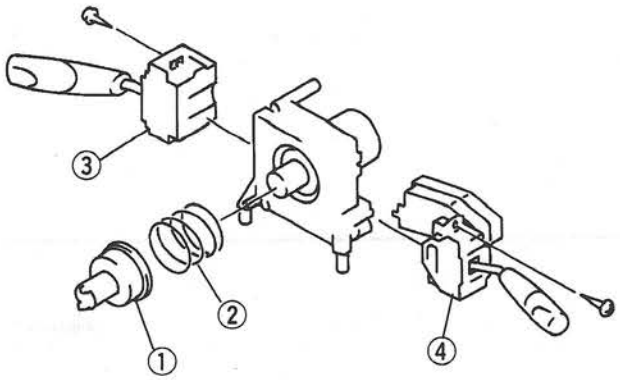

W6U918WAC

LIGHT SWITCH REMOVAL/INSTALLATION

W6U918W13

1. Disconnect the negative battery cable.
2. Remove the column cover.
3. Disconnect the connectors.
4. Remove the screws to remove the light switch.
5. Install in the reverse order of removal.

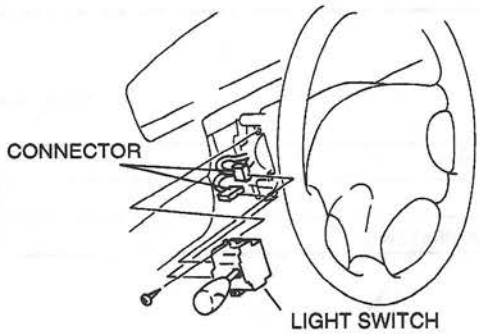

W6U918WAD

LIGHT SWITCH INSPECTION

W6U918W14

1. Remove the light switch. (Refer to 09–18 LIGHT SWITCH REMOVAL/INSTALLATION.)
2. Check for continuity between the light switch terminals by using an ohmmeter.

Headlight switch

○—○ : Continuity

Switch position			Terminal								
Light	Dimmer	Flash-to-pass	2D	2E	2F	1G	1H	1F	1D	1A	1B
OFF	—	Off									
		On	○		○	○			○	○	
TNS	—	Off	○	○							
		On	○	○	○	○			○	○	
Headlight	LO	Off	○	○	○	○		○	○		○
		On	○	○	○	○	○		○	○	
	HI	—	○	○	○	○	○		○	○	

W6U918WB5

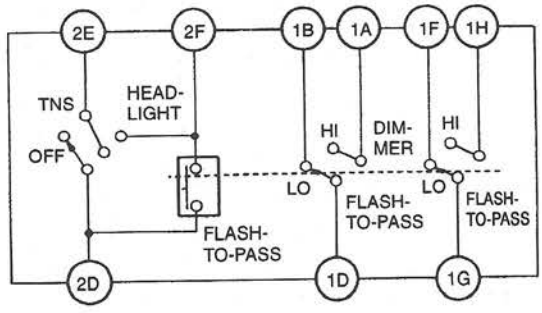

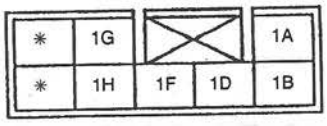

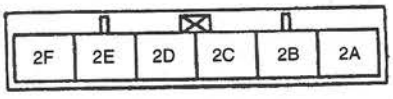

W6U918WAE

Turn switch

○—○ : Continuity

Switch position	Terminal		
	2C	2A	2B
Left	○	○	
Off			
Right	○		○

W6U918WB6

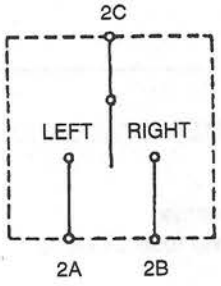

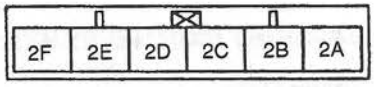

W6U918WAF

3. If not as specified, replace the light switch.

HAZARD WARNING SWITCH REMOVAL/INSTALLATION

W6U918W15

1. Disconnect the negative battery cable.
2. Remove the meter hood. (Refer to 09–17 METER HOOD REMOVAL/INSTALLATION.)
3. Press the hooks of the hazard warning switch and pull the switch out.

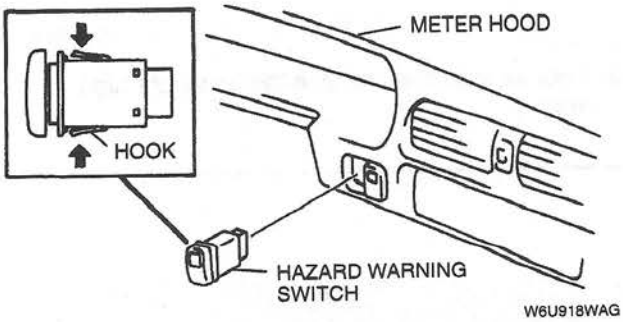

W6U918WAG

4. Install in the reverse order of removal.

HAZARD WARNING SWITCH INSPECTION

W6U918W16

1. Remove the hazard warning switch. (Refer to 09–18 HAZARD WARNING SWITCH REMOVAL/INSTALLATION.)
2. Check for continuity between the hazard warning switch terminals by using an ohmmeter.

○—○ : Continuity ○—⓪—○ : Bulb

Switch position	Terminal			
	A	B	C	D
Off			○—⓪—○	
On	○—○		○—⓪—○	

W6U918WB7

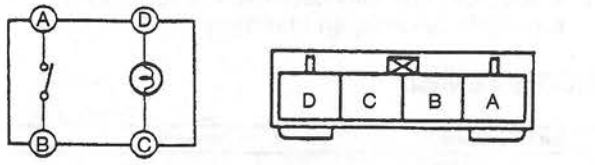

W6U918WAH

3. If not as specified, replace the hazard warning switch.

HEADLIGHT HIGH RELAY REMOVAL/INSTALLATION

W6U918W17

Canada Only

1. Disconnect the negative battery cable.
2. Remove the nuts to move the main fuse block to the side.
3. Disconnect the connector.
4. Remove the headlight high relay.

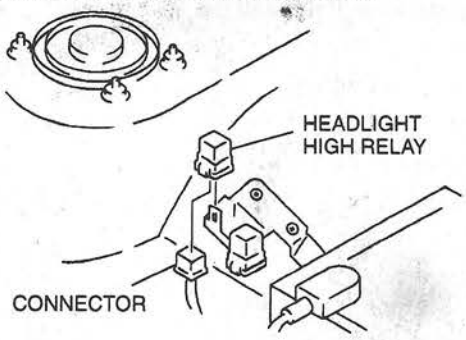

W6U918WAJ

5. Install in the reverse order of removal.

HEADLIGHT HIGH RELAY INSPECTION

W6U918W18

Canada Only

1. Remove the headlight high relay. (Refer to 09–18 HEADLIGHT HIGH RELAY REMOVAL/INSTALLATION.)
2. Check for continuity between the headlight high relay terminals by using an ohmmeter.

○—○ : Continuity

Step	Terminal			
	A	F	B	E
1	○—○			
2	B+	GND	○—○	

W6U918WB8

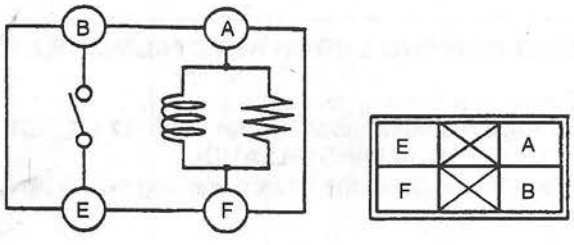

W6U918WAK

3. If not as specified, replace the headlight high relay.

HEADLIGHT RELAY INSPECTION

W6U918W19

1. Disconnect the negative battery cable.
2. Remove the headlight relay.
3. Check for continuity between the headlight relay terminals by using an ohmmeter.

○—○ : Continuity

Step	Terminal			
	A	F	B	E
1	○—○			
2	B+	GND	○—○	

W6U918WB9

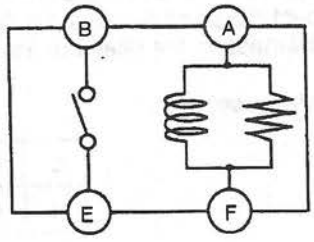

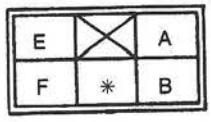

W6U918WAL

4. If not as specified, replace the headlight relay.

TNS RELAY INSPECTION

W6U918W20

1. Disconnect the negative battery cable.
2. Remove the TNS relay.
3. Check for continuity between the TNS relay terminals by using an ohmmeter.

○—○ : Continuity

Step	Terminal			
	A	F	B	E
1	○—○			
2	B+	GND	○—○	

W6U918WBA

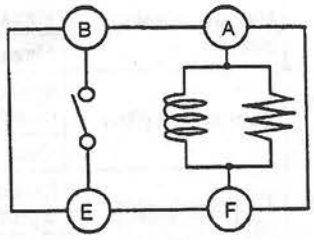

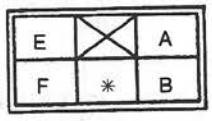

W6U918WAM

4. If not as specified, replace the TNS relay.

FLASHER UNIT REMOVAL/INSTALLATION

W6U918W21

1. Disconnect the negative battery cable.
2. Disconnect the connector.
3. Remove the flasher unit.

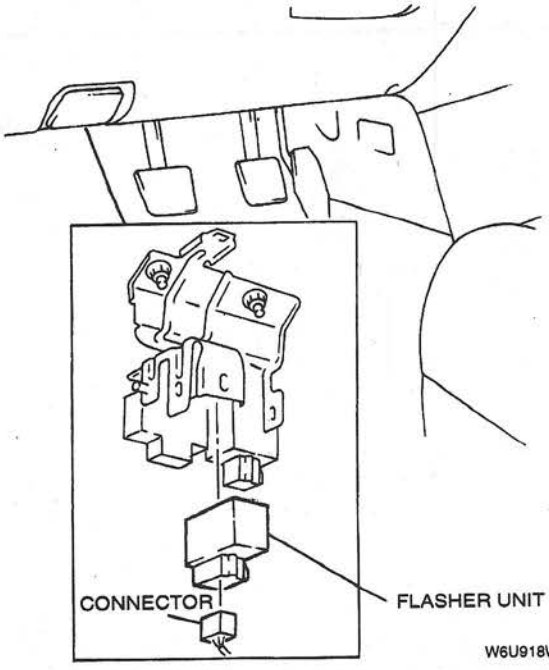

W6U918WAN

4. Install in the reverse order of removal.

FLASHER UNIT INSPECTION

W6U918W22

1. Measure the voltage at the flasher unit terminals as indicated below.
2. Disconnect the flasher unit connector before checking for continuity at terminal B.
3. If not as specified, inspect the parts listed under "Inspection area" and the related wiring harnesses.
4. If the parts and wiring harnesses are okay but the system still does not work properly, replace the flasher unit.

Terminal Voltage List (Reference)

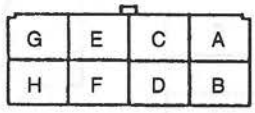

W6U918WAP

Terminal	Signal	Connection	Test condition	Voltage (V)/ Continuity	Inspection area
A	Power supply	HAZARD 15 A fuse	Constant	B+	HAZARD 15 A fuse
B	Flasher unit ground	GND	Constant: check for continuity to ground	Yes	GND
C	Hazard warning on	Hazard warning switch	Hazard warning switch on	0	Hazard warning switch
			Hazard warning switch off	B+	
D	Turn switch on/off (RH)	Turn switch (RH)	Ignition switch at ON and turn switch (RH) on	B+	Turn switch
			Other	0	
E	Turn signal flasher (RH)	Turn signal light (RH)	Ignition switch at ON and turn signal light (RH) flashes	Alternates 0 and B+	Turn signal light (RH)
			Other	0	
F	Turn switch on/off (LH)	Turn switch (LH)	Ignition switch at ON and turn switch (LH) on	B+	Turn switch
			Other	0	
G	—	Not used	—	—	—
H	Turn signal flasher (LH)	Turn signal light (LH)	Ignition switch at ON and turn signal light (LH) flashes	Alternates 0 and B+	Turn signal light (LH)
			Other	0	

INTERIOR LIGHT REMOVAL/INSTALLATION

W6U918W23

1. Disconnect the negative battery cable.
2. Remove in the order indicated in the table.
3. Install in the reverse order of removal.

Note

- For type A interior light, to remove the bulb move bulb gently to the left or right using a small screwdriver and pull down out of the clip. To install new bulb loop a small rubber band around the bulb to hold it secure as it is positioned in one of the clips. Then with the assistance of the rubber band move bulb over to go into the remaining clip.
- When bulb is in both clips, carefully remove the rubber band. Gently bend the two clips outward using the screwdriver, to secure bulb.

TYPE A

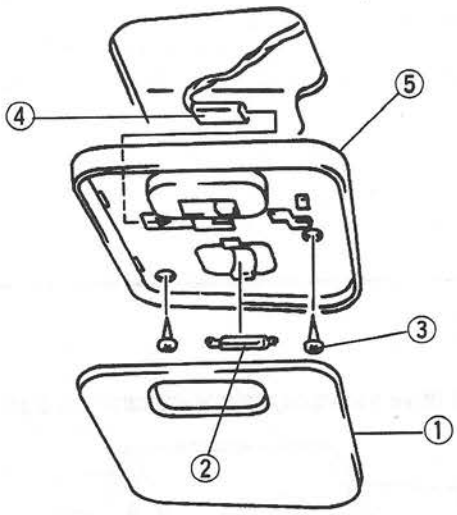

W6U918WBF

TYPE B

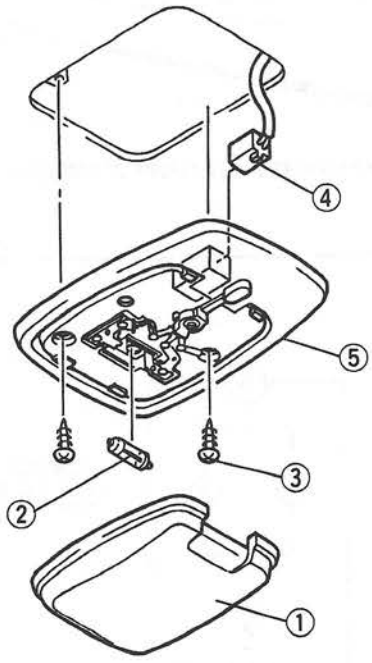

W6U918WAQ

1	Lens ☞ Removal Note
2	Interior light bulb ☞ Installation Note
3	Screw
4	Connector
5	Housing

Lens Removal Note

1. Insert a tape-wrapped, flathead screwdriver as shown in the figure.

TYPE A

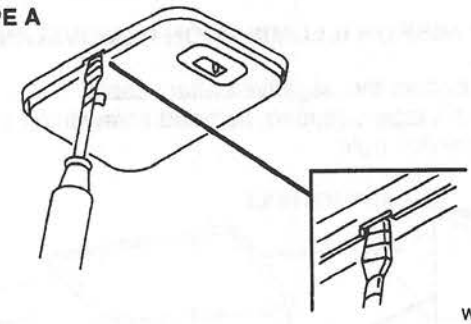

W6U918WBG

TYPE B

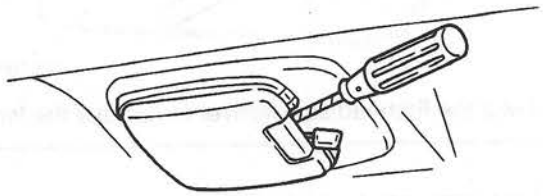

W6U918WAR

2. Twist the flathead screwdriver to remove the lens.

INTERIOR LIGHT INSPECTION

1. Remove the interior light. (Refer to 09–18 INTERIOR LIGHT REMOVAL/INSTALLATION.)
2. Check for continuity between the interior light terminals by using an ohmmeter.

W6U918W24

○—◎—○ : Bulb

Switch position	Terminal		
	A	B	Body GND
ON		○—◎—○	
DOOR	○—◎—○		
OFF			

W6U918WBB

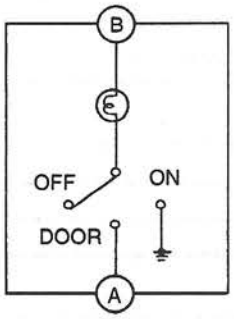

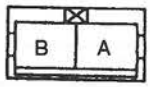

W6U918WAS

3. If not as specified, replace the interior light.

VANITY MIRROR ILLUMINATION REMOVAL/INSTALLATION

W6U918W25

1. Disconnect the negative battery cable.
2. Insert a tape-wrapped, flathead screwdriver into the service hole.

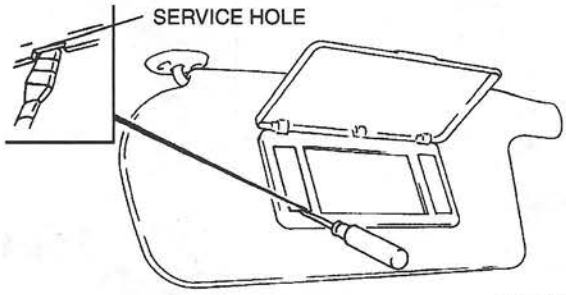

W6U918WAT

3. Twist the flathead screwdriver to remove the lens.
4. Remove the vanity mirror illumination bulb.

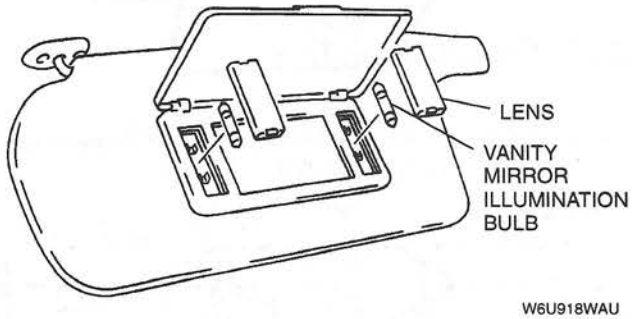

W6U918WAU

5. Install in the reverse order of removal.

VANITY MIRROR ILLUMINATION INSPECTION

W6U918W26

1. Remove the sunvisor.
2. Check for continuity between the vanity mirror illumination terminals by using an ohmmeter.

: Bulb

Vanity mirror cover condition	Terminal	
	A	B
Open		
Close		

W6U918WBC

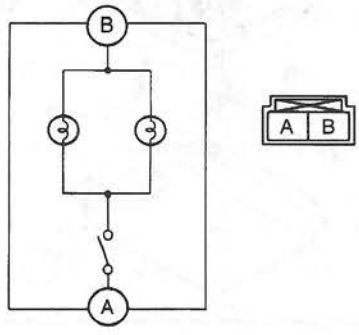

W6U918WAV

3. If not as specified, replace the sunvisor.

DOOR SWITCH REMOVAL/INSTALLATION

W6U918W27

1. Disconnect the negative battery cable.
2. Remove the screw to remove the door switch.
3. Disconnect the connector.

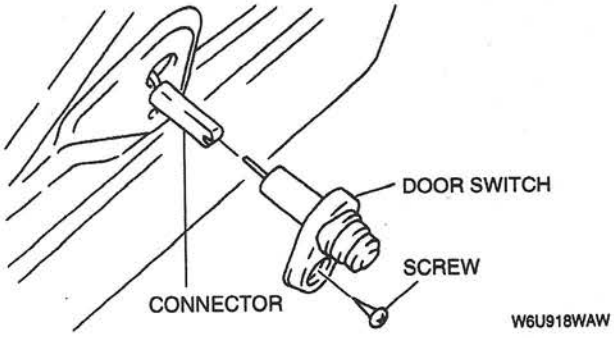

W6U918WAW

4. Install in the reverse order of removal.

DOOR SWITCH INSPECTION

W6U918W28

1. Remove the door switch.
2. Check for continuity between the door switch terminal and a body ground by using an ohmmeter.

○—○ : Continuity

Switch position	Terminal	
	A	Body GND
Pressed		
Released	○	○

W6U918WBD

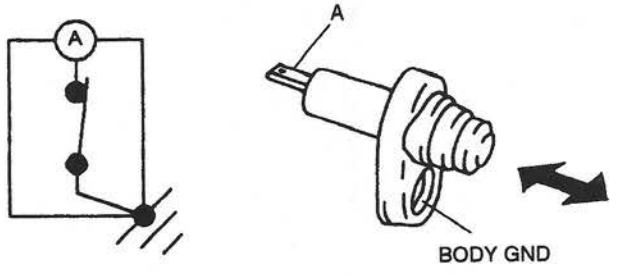

W6U918WAX

3. If not as specified, replace the door switch.

TRUNK COMPARTMENT LIGHT SWITCH INSPECTION

W6U918W29

1. Disconnect the trunk compartment light switch connector.
2. Check for continuity between the trunk compartment light switch terminals by using an ohmmeter.

○—○ : Continuity

Switch position	Terminal	
	A	B
Locked (trunk lid closed)		
Unlocked (trunk lid opened)	○	○

W6U918WBE

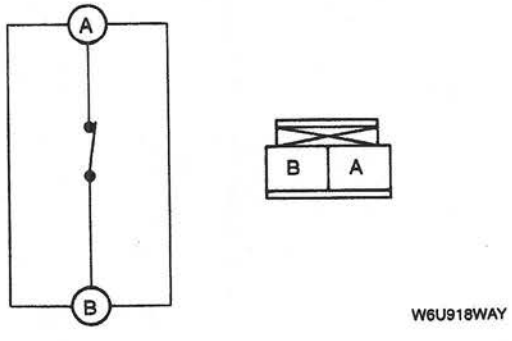

W6U918WAY

3. If not as specified, replace the trunk compartment light switch.

PANEL LIGHT CONTROL SWITCH REMOVAL/INSTALLATION

W6U918W30

1. Disconnect the negative battery cable.
2. Remove the meter hood. (Refer to 09–17 METER HOOD REMOVAL/INSTALLATION.)
3. Press the hooks of the panel light control switch and pull the switch out.

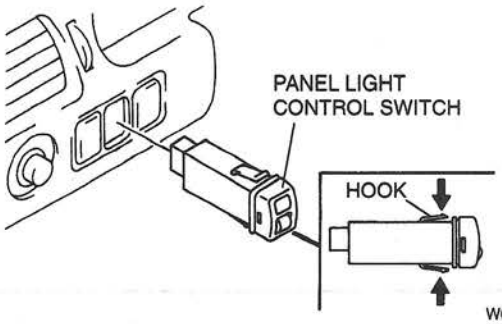

W6U918WAZ

4. Install in the reverse order of removal.

PANEL LIGHT CONTROL SWITCH INSPECTION

W6U918W31

1. Remove the panel light control switch. (Refer to 09–18 PANEL LIGHT CONTROL SWITCH REMOVAL/INSTALLATION.)
2. Connect the connector to the panel light control switch.
3. Measure the voltage at the panel light control switch as indicated below.
4. Disconnect the panel light control switch connector before checking for continuity at terminal D.
5. If not as specified, inspect the parts listed under "Inspection area" and the related wiring harnesses.
6. If the parts and wiring harnesses are okay but the system still does not work properly, replace the panel light control switch.

Terminal Voltage List (Reference)

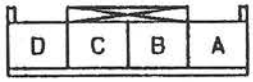

W6U918WB0

Terminal	Signal	Connection	Test condition	Voltage (V)/ Continuity	Inspection area
A	—	Not used	—	—	—
B	TNS	Light switch	Headlight switch at first or second position	B+	• Light switch • TAIL 15 A fuse
			Other	0	
C	Illumination	Each illumination	Inspect by using an oscilloscope ☞ C terminal inspection	—	Each illumination
D	Panel light control switch ground	GND	Constant: check for continuity to ground	Yes	GND

C terminal inspection

1. Measure the wave pattern of the C terminal on the panel light control switch by using an oscilloscope.

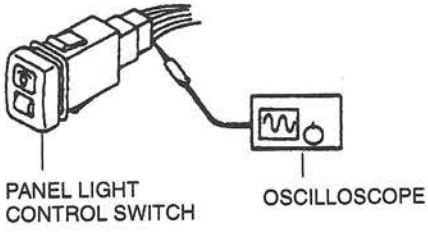

W6U918WB1

2. Set the headlight switch to either the first or second position.
3. Set the panel light control switch to the brightest position.
4. Verify that the pattern on the screen is as shown in the figure.



W6U918WB2

5. Verify that the pattern on the screen matches the pattern shown in the figure as the panel light control switch is gradually turned to the darkest position.

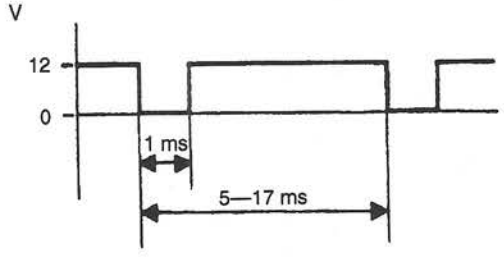

W6U918WB3

09–19 WIPER/WASHER SYSTEMS

WINDSHIELD WIPER ARM AND BLADE ADJUSTMENT 09–19–1
WINDSHIELD WIPER ARM AND BLADE REMOVAL/INSTALLATION 09–19–1
Windshield Wiper Arm Installation Note 09–19–1
WINDSHIELD WIPER LINK REMOVAL/INSTALLATION 09–19–2
WINDSHIELD WIPER MOTOR REMOVAL/INSTALLATION 09–19–2
WINDSHIELD WIPER MOTOR INSPECTION 09–19–3
WINDSHIELD WASHER TANK REMOVAL/INSTALLATION 09–19–4
WINDSHIELD WASHER MOTOR REMOVAL/INSTALLATION 09–19–4
WINDSHIELD WASHER MOTOR INSPECTION 09–19–5
WASHER FLUID-LEVEL SENSOR REMOVAL/INSTALLATION 09–19–5
WASHER FLUID-LEVEL SENSOR INSPECTION 09–19–5
WINDSHIELD WIPER AND WASHER SWITCH REMOVAL/INSTALLATION 09–19–6
WINDSHIELD WIPER AND WASHER SWITCH INSPECTION 09–19–6
WINDSHIELD WASHER NOZZLE ADJUSTMENT 09–19–7
WINDSHIELD WASHER NOZZLE REMOVAL 09–19–7
WINDSHIELD WASHER NOZZLE INSTALLATION 09–19–7
WINDSHIELD WASHER PIPE REMOVAL/INSTALLATION 09–19–8

WINDSHIELD WIPER ARM AND BLADE ADJUSTMENT

1. Operate the windshield wiper motor to set the wipers in the park position.
2. Set the windshield wiper arm height as shown.

W6U919W01

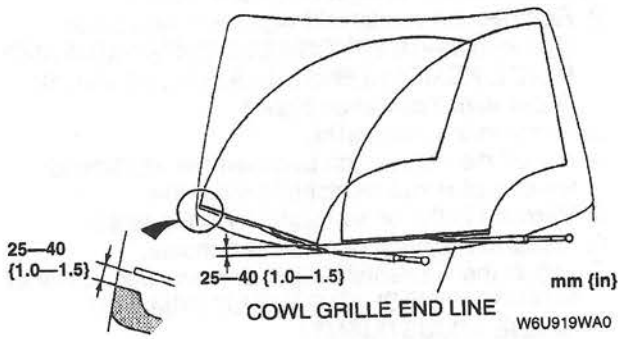

W6U919WA0

WINDSHIELD WIPER ARM AND BLADE REMOVAL/INSTALLATION

W6U919W02

1. Remove in the order indicated in the table.
2. Install in the reverse order of removal.
3. Adjust the windshield wiper arm and blade. (Refer to 09–19 WINDSHIELD WIPER ARM AND BLADE ADJUSTMENT.)

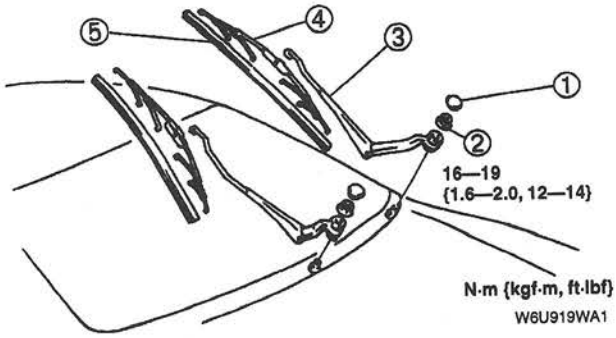

W6U919WA1

1	Cap
2	Nut
3	Windshield wiper arm ☞ Installation Note
4	Windshield wiper blade
5	Rubber brush

Windshield Wiper Arm Installation Note

- Clean the windshield wiper arm connector shafts by using a wire brush before installing the windshield wiper arms.

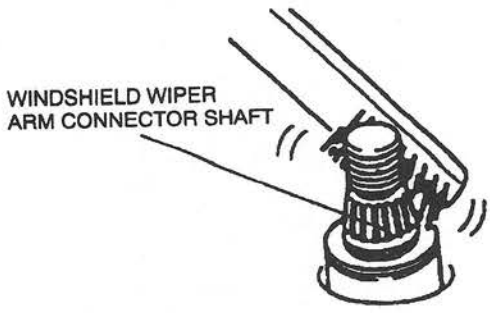

W6U919WA2

WINDSHIELD WIPER LINK REMOVAL/INSTALLATION

1. Remove the windshield wiper arm and blade. (Refer to 09–19 WINDSHIELD WIPER ARM AND BLADE REMOVAL/INSTALLATION, Windshield Wiper Arm Installation Note.)
2. Remove the cowl grille.
3. Pry off the connection between the windshield wiper motor and windshield wiper link.
4. Remove in the order indicated in the table.
5. Install in the reverse order of removal.
6. Adjust the windshield wiper arm and blade. (Refer to 09–19 WINDSHIELD WIPER ARM AND BLADE ADJUSTMENT).

W6U919W03

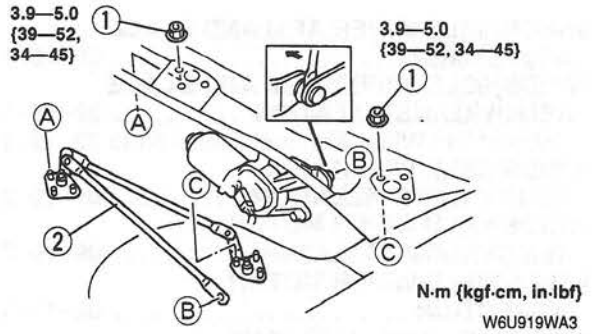

W6U919WA3

1	Nut
2	Windshield wiper link

WINDSHIELD WIPER MOTOR REMOVAL/INSTALLATION

1. Disconnect the negative battery cable.
2. Remove the windshield wiper arm and blade. (Refer to 09–19 WINDSHIELD WIPER ARM AND BLADE REMOVAL/INSTALLATION, Windshield Wiper Arm Installation Note.)
3. Remove the cowl grille.
4. Pry off the connection between the windshield wiper motor and windshield wiper link.
5. Remove in the order indicated in the table.
6. Install in the reverse order of removal.
7. Adjust the windshield wiper arm and blade. (Refer to 09–19 WINDSHIELD WIPER ARM AND BLADE ADJUSTMENT.)

W6U919W04

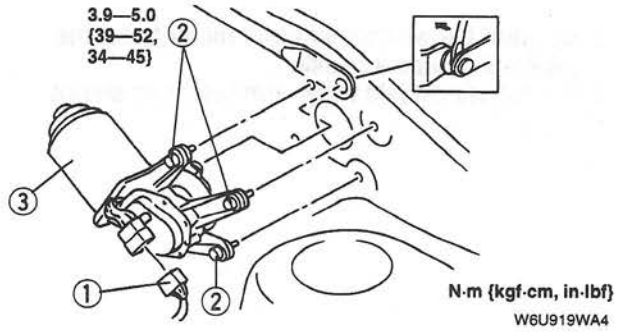

W6U919WA4

1	Windshield wiper motor connector
2	Bolt
3	Windshield wiper motor

WINDSHIELD WIPER MOTOR INSPECTION

W6U919W05

1. Turn the ignition switch to LOCK while the windshield wiper is operating.
2. Verify that the windshield wiper does not stop in the park position.
3. Disconnect the windshield wiper motor connector.
4. Inspect for continuity between the windshield wiper motor terminals by using an ohmmeter.

○—○ : Continuity

Windshield wiper motor position	Terminal				
	A	C	D	E	F
Except park position	○	○	○	○	○

W6U919WA5

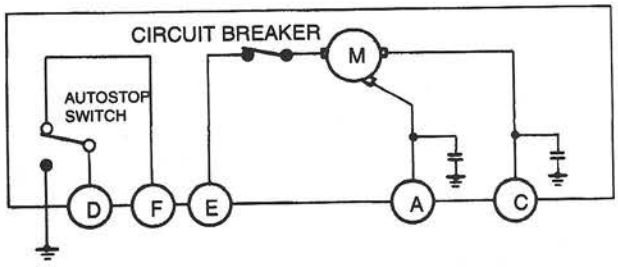

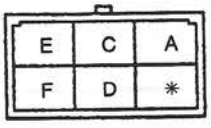

W6U919WA6

5. Connect the windshield wiper motor connector.
6. Turn the ignition switch to ON.
7. Turn the wiper switch off while the windshield wiper is operating.
8. Verify that the windshield wiper stops in the park position.
9. Disconnect the windshield wiper motor connector.
10. Inspect for continuity between the windshield wiper motor terminals by using an ohmmeter.

○—○ : Continuity

Windshield wiper motor position	Terminal				
	A	C	D	E	Body GND
Park position	○	○	○	○	○

W6U919WA7

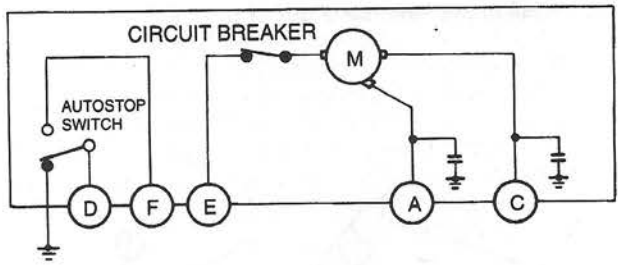

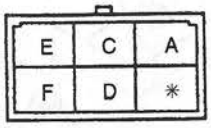

W6U919WA8

11. Connect ground to the windshield wiper motor terminal E and battery positive voltage to the following terminals of the windshield wiper motor. Verify that the windshield wiper motor operates as indicated below.

Terminal	Operation
A	High
C	Low

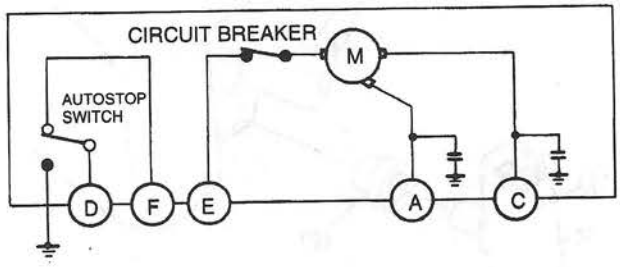

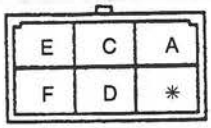

W6U919WA9

12. If not as specified, replace the windshield wiper motor.

WINDSHIELD WASHER TANK REMOVAL/INSTALLATION

W6U919W06

1. Disconnect the negative battery cable.
2. Partially peel off the right side mud guard.
3. Remove in the order indicated in the table.
4. Install in the reverse order of removal.

1	Windshield washer motor connector
2	Washer fluid-level sensor connector
3	Windshield washer pipe
4	Bolt
5	Windshield washer tank

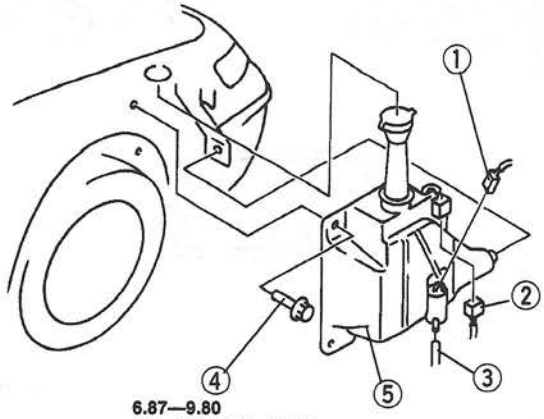

N·m {kgf·cm, in·lbf}

W6U919WAA

WINDSHIELD WASHER MOTOR REMOVAL/INSTALLATION

W6U919W07

1. Disconnect the negative battery cable.
2. Partially peel off the right side mud guard.
3. Remove the windshield washer tank.
4. Remove in the order indicated in the table.
5. Install in the reverse order of removal.

1	Windshield washer motor
2	Grommet

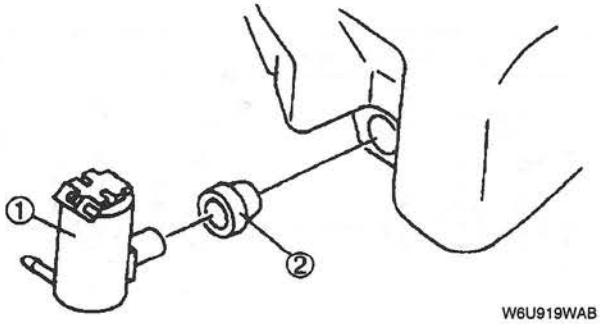

W6U919WAB

WINDSHIELD WASHER MOTOR INSPECTION

W6U919W08

1. Partially peel off the right side mud guard.
2. Remove the windshield washer tank.
3. Connect battery positive voltage to terminal B and ground to terminal A of the motor.
4. Verify that the windshield washer motor operates.
5. If the motor does not operate, replace the windshield washer motor.

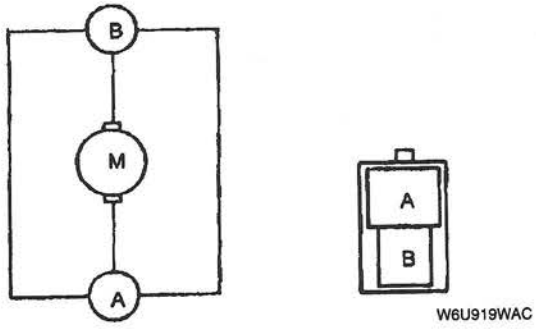

W6U919WAC

WASHER FLUID-LEVEL SENSOR REMOVAL/INSTALLATION

W6U919W09

1. Disconnect the negative battery cable.
2. Partially peel off the right side mud guard.
3. Remove the windshield washer tank.
4. Remove in the order indicated in the table.
5. Install in the reverse order of removal.

1	Washer fluid-level sensor
2	Grommet

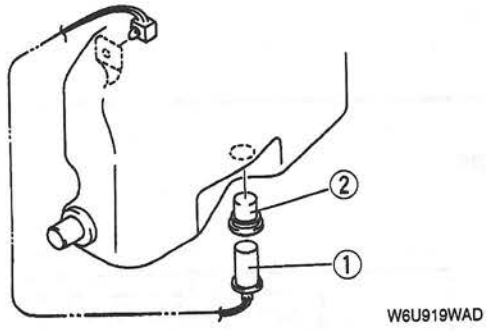

W6U919WAD

WASHER FLUID-LEVEL SENSOR INSPECTION

W6U919W10

1. Partially peel off the right side mud guard.
2. Remove the windshield washer tank.
3. Inspect for continuity between the washer fluid-level sensor terminals by using an ohmmeter.

O—O : Continuity

Fluid level	Terminal	
	A	B
Above Low		
Below Low	O	O

W6U919WAE

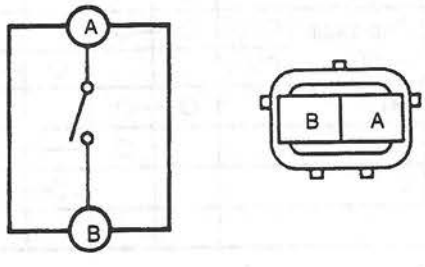

W6U919WAF

4. If not as specified, replace the washer fluid-level sensor.

WINDSHIELD WIPER AND WASHER SWITCH REMOVAL/INSTALLATION

W6U919W11

1. Disconnect the negative battery cable.
2. Remove the column cover.
3. Disconnect the windshield wiper and washer switch connector.
4. Remove the screws.
5. Remove the windshield wiper and washer switch.
6. Install in the reverse order of removal.

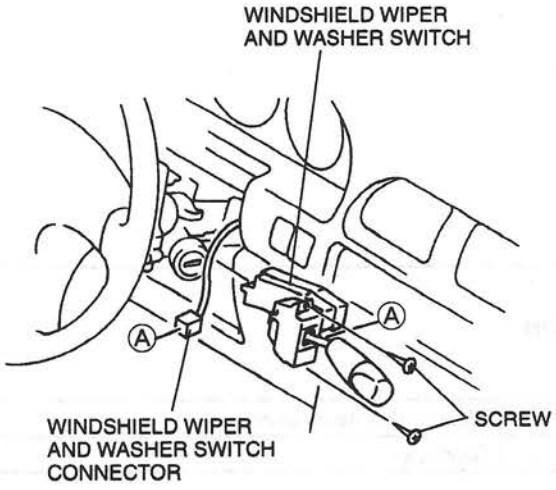

W6U9191AG

WINDSHIELD WIPER AND WASHER SWITCH INSPECTION

W6U919W12

1. Remove the column cover.
2. Remove the windshield wiper and washer switch.
3. Inspect for continuity between the windshield wiper and washer switch terminals by using an ohmmeter.

○—○ : Continuity

Switch position			Terminal				
			D	H	F	B	G
OFF			○—○				
Wiper	One-touch switch	OFF	○—○				
		ON			○—○		
	INT		○—○				
	1			○—	—○		
	2				○—○		
Washer						○—○	

W6U919WAH

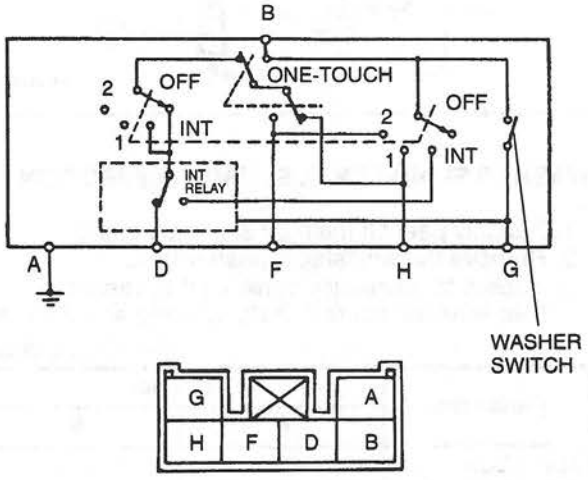

W6U919WAJ

4. If not as specified, replace the windshield wiper and washer switch.

WINDSHIELD WASHER NOZZLE ADJUSTMENT

W6U919W13

- Insert a needle or equivalent tool into the spray hole of the windshield washer nozzle and adjust the nozzle direction as shown.

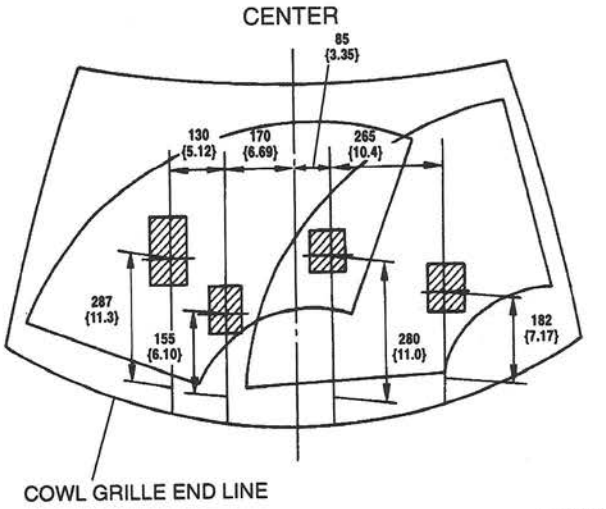

mm {in}

W6U919WAK

WINDSHIELD WASHER NOZZLE REMOVAL

W6U919W14

1. Remove the hood insulator.
2. Disconnect the windshield washer pipe from the windshield washer nozzle.
3. Remove the windshield washer nozzle by using a **10 mm {0.4 in}** deep socket wrench from underneath the bonnet.

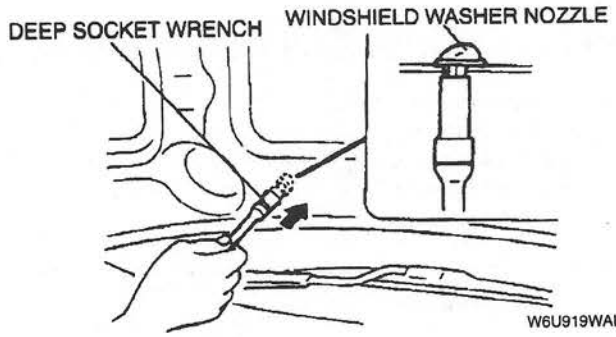

W6U919WAL

WINDSHIELD WASHER NOZZLE INSTALLATION

W6U919W15

1. Connect the windshield washer pipe to windshield washer nozzle.
2. Push the windshield washer nozzle into the installation hole.
3. Adjust the windshield washer nozzle. (Refer to 09–19 WINDSHIELD WASHER NOZZLE ADJUSTMENT.)
4. Install the hood insulator.

WINDSHIELD WASHER PIPE REMOVAL/INSTALLATION

W6U919W16

1. Partially peel off the right side mud guard.
2. Remove in the order indicated in the table.
3. Install in the reverse order of removal.

1	Clip
2	Joint pipe
3	Windshield washer pipe

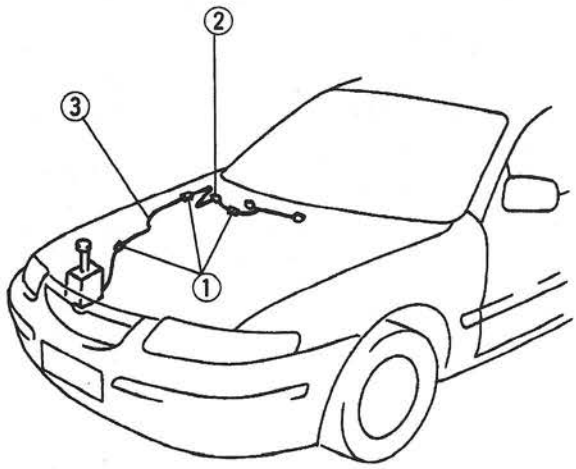

W6U919WAM

09–20 ENTERTAINMENT

DOOR SPEAKER
REMOVAL/INSTALLATION 09–20–1
DOOR SPEAKER INSPECTION 09–20–1
REAR SPEAKER
REMOVAL/INSTALLATION 09–20–2
REAR SPEAKER INSPECTION 09–20–2
FRONT ANTENNA
FEEDER INSPECTION 09–20–2
FRONT ANTENNA FEEDER
REMOVAL/INSTALLATION 09–20–3
REAR ANTENNA FEEDER
REMOVAL/INSTALLATION 09–20–4
REAR ANTENNA FEEDER
INSPECTION 09–20–4
MANUAL ANTENNA
REMOVAL/INSTALATION 09–20–5
Mounting Nut Removal Note 09–20–5
MANUAL ANTENNA INSPECTION 09–20–5
POWER ANTENNA INSPECTION 09–20–5
POWER ANTENNA
REMOVAL/INSTALLATION 09–20–6
Mounting Nut Removal Note 09–20–6
POWER ANTENNA
DISASSEMBLY/ASSEMBLY 09–20–7
ANTENNA MAST REMOVAL 09–20–7
ANTENNA MAST INSTALLATION 09–20–7
AUDIO AMPLIFIER
REMOVAL/INSTALLATION 09–20–8
AUDIO UNIT REMOVAL 09–20–8
AUDIO UNIT INSTALLATION 09–20–9
CIGARETTE LIGHTER INSPECTION .. 09–20–9
CIGARETTE LIGHTER
REMOVAL/INSTALLATION 09–20–9
Socket Removal Note 09–20–9

DOOR SPEAKER REMOVAL/INSTALLATION

W6U920W01

Caution

- **When removing or installing a door speaker, touching the radio cone paper could cause poor sound quality. When removing or installing a door speaker, hold the speaker's bracket and handle with care.**

1. Disconnect the negative battery cable.
2. Remove the front door trim. (Refer to 09–17 FRONT DOOR TRIM REMOVAL/INSTALLATION.)
3. Remove the screws.
4. Disconnect the connector and remove the door speaker.

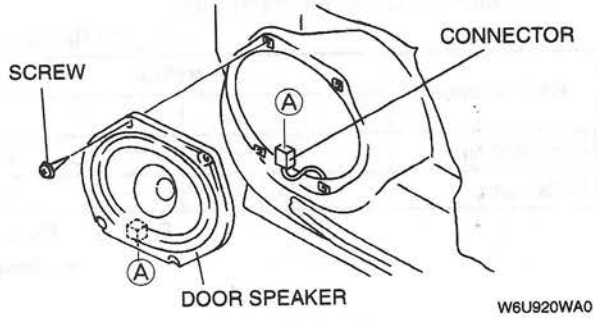

W6U920WA0

5. Position the door speaker so that the terminals face downward and install in the reverse order of removal.

DOOR SPEAKER INSPECTION

W6U920W02

1. Remove the door speaker. (Refer to 09–20 DOOR SPEAKER REMOVAL/INSTALLATION.)
2. Check for resistance between the door speaker terminals by using an ohmmeter.

: Resistance

Door speaker	Terminal A	Terminal B	
Standard type	○	○	R_1
BOSE type	○	○	R_2

R_1: 4 Ω R_2: 2 Ω

W6U920WA1

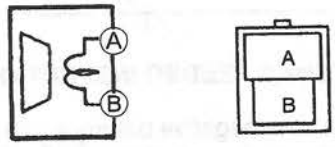

W6U920WA2

3. Touch the leads of an ohmmeter to the door speaker terminals and verify that the speaker clicks.

Range
×1 Ω

4. If not as specified, replace the door speaker.

REAR SPEAKER REMOVAL/INSTALLATION

W6U920W03

Caution

- **When removing or installing a rear speaker, touching the radio cone paper could cause poor sound quality. When removing or installing a rear speaker, hold the speaker's bracket and handle with care.**

1. Disconnect the negative battery cable.
2. Remove the rear package trim. (Refer to 09–17 REAR PACKAGE TRIM REMOVAL/INSTALLATION.)
3. Remove the screws.
4. Disconnect the connector and remove the rear speaker.

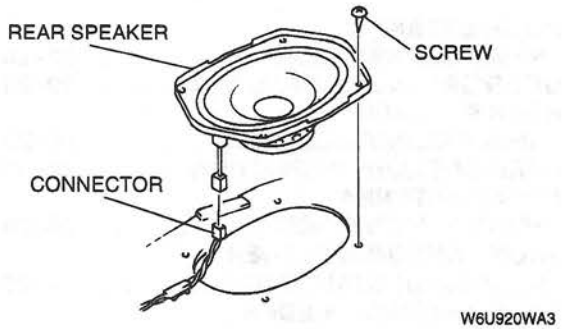

W6U920WA3

5. Install in the reverse order of removal.

REAR SPEAKER INSPECTION

W6U920W04

1. Remove the rear speaker. (Refer to 09–20 REAR SPEAKER REMOVAL/INSTALLATION.)
2. Check for resistance between the rear speaker terminals by using an ohmmeter.

O-W-O : Resistance

Rear speaker	Terminal		
	A	B	
Standard type	O	O	R_1
BOSE type	O	O	R_2

R_1: 4 Ω R_2: 2 Ω

W6U920WA4

3. Touch the leads of an ohmmeter to the rear speaker terminals and verify that the speaker clicks.

Range
×1 Ω

4. If not as specified, replace the rear speaker.

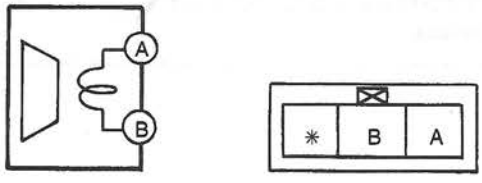

W6U920WA5

FRONT ANTENNA FEEDER INSPECTION

W6U920W05

1. Disconnect the negative battery cable.
2. Remove the audio unit. (Refer to 09–20 AUDIO UNIT REMOVAL.)
3. Remove the rear console. (Refer to 09–17 REAR CONSOLE REMOVAL/INSTALLATION.)
4. Disconnect the front antenna feeder.
5. Verify that there is no continuity between front antenna feeder terminals A and B by using an ohmmeter.

6. Check for continuity between the front antenna feeder terminals by using an ohmmeter.

O—O : Continuity

Step	Terminal			
	A	B	C	D
1	O		O	
2		O		O

W6U920WA6

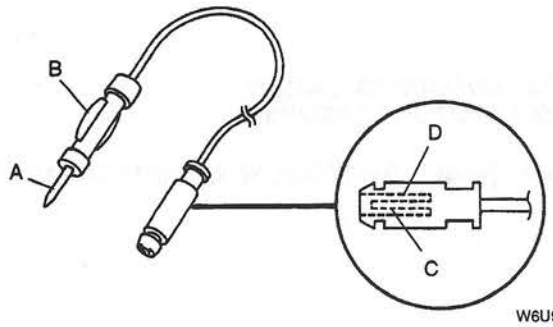

W6U920WA7

7. If not as specified, replace the front antenna feeder.

FRONT ANTENNA FEEDER REMOVAL/INSTALLATION

W6U920W06

1. Disconnect the negative battery cable.
2. Remove the rear console. (Refer to 09–17 REAR CONSOLE REMOVAL/INSTALLATION.)
3. Remove the audio unit. (Refer to 09–20 AUDIO UNIT REMOVAL.)
4. Remove in the order indicated in the table.
5. Install in the reverse order of removal. (Refer to 09–20 AUDIO UNIT INSTALLATION.)

1	Clip
2	Front antenna feeder

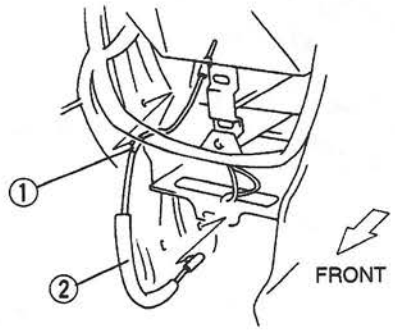

W6U920WA8

REAR ANTENNA FEEDER REMOVAL/INSTALLATION

W6U920W07

1. Disconnect the negative battery cable.
2. Remove the rear console. (Refer to 09–17 REAR CONSOLE REMOVAL/INSTALLATION.)
3. Turn over the floor covering from passenger's side. (Refer to 09–17 FLOOR COVERING REMOVAL/INSTALLATION.)
4. Turn over the trunk compartment covering from passenger's side. (Refer to 09–17 TRUNK COMPARTMENT COVERING REMOVAL/INSTALLATION.)
5. Disconnect the rear antenna feeder.
6. Remove in the order indicated in the table.
7. Install in the reverse order of removal.

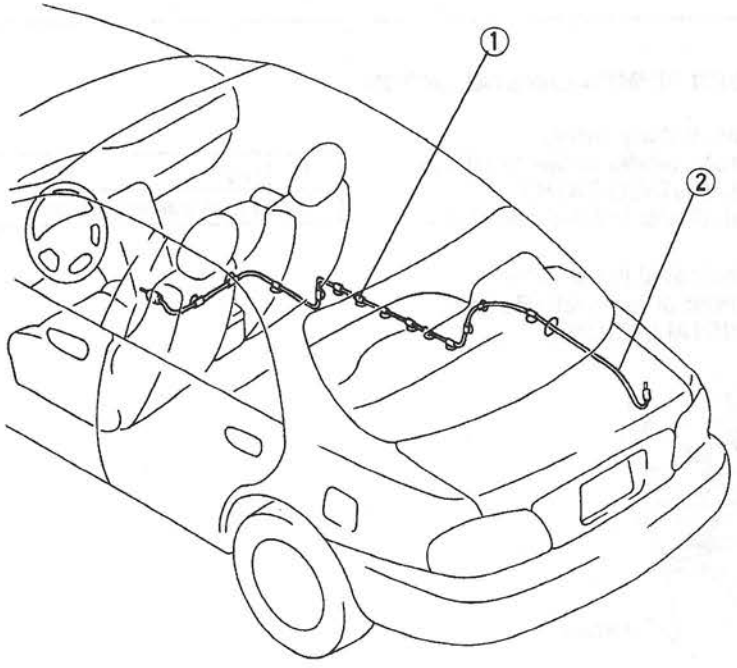

W6U920WA9

1	Clip	2	Rear antenna feeder

REAR ANTENNA FEEDER INSPECTION

W6U920W08

1. Remove the rear antenna feeder. (Refer to 09–20 REAR ANTENNA FEEDER REMOVAL/INSTALLATION.)
2. Verify that there is no continuity between rear antenna feeder terminals A and B by using an ohmmeter.
3. Check for continuity between the rear antenna feeder terminals by using an ohmmeter.

○—○ : Continuity

Step	Terminal			
	A	B	C	D
1	○		○	
2		○		○

W6U920WAA

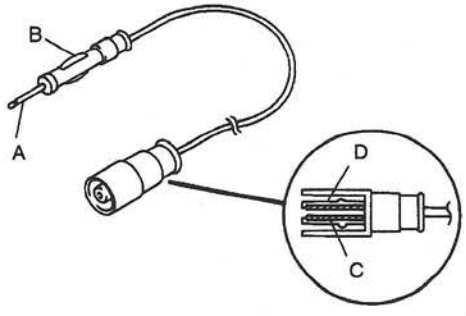

W6U920WAB

4. If not as specified, replace the rear antenna feeder.

MANUAL ANTENNA REMOVAL/INSTALATION

W6U920W09

Caution

- **When installing the manual antenna, not tightening the mounting nut fully could cause poor radio reception. When installing the manual antenna, securely tighten the mounting nut according to the specified torque value.**

1. Disconnect the negative battery cable.
2. Turn over the trunk compartment covering from passenger's side. (Refer to 09–17 TRUNK COMPARTMENT COVERING REMOVAL/INSTALLATION.)
3. Remove in the order indicated in the table.
4. Install in the reverse order of removal.

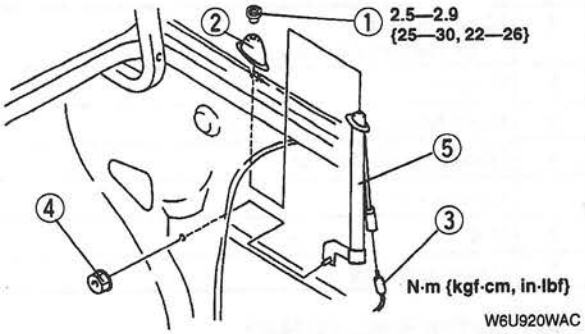

W6U920WAC

1	Mounting nut ☞ Removal Note
2	Spacer
3	Rear antenna feeder
4	Nut
5	Manual antenna

Mounting Nut Removal Note

- Use snap-ring pliers to remove the mounting nut.

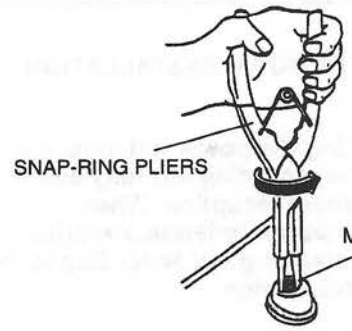

W6U920WAD

MANUAL ANTENNA INSPECTION

W6U920W10

1. Turn over the trunk compartment covering from passenger's side. (Refer to 09–17 TRUNK COMPARTMENT COVERING REMOVAL/INSTALLATION.)
2. Disconnect the rear antenna feeder.
3. Verify that there is no continuity between manual antenna terminals A and B by using an ohmmeter.
4. Check for continuity between the manual antenna terminals by using an ohmmeter.

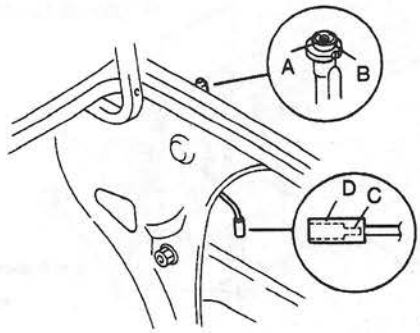

W6U920WAF

○—○ : Continuity

Step	Terminal			
	A	B	C	D
1	○		○	
2		○		○

W6U920WAE

5. If not as specified, replace the manual antenna.

POWER ANTENNA INSPECTION

W6U920W13

1. Turn over the trunk compartment covering from passenger's side. (Refer to 09–17 TRUNK COMPARTMENT COVERING REMOVAL/INSTALLATION.)
2. Disconnect the power antenna connector.
3. Connect ground to terminal D of the power antenna.
4. Connect ground to a bare metal part of the vehicle and battery positive voltage to the following terminals of the power antenna. Verify that the power antenna operated as indicated below.

Terminal		Power antenna operation
A	B	
—	B+	Down
B+	B+	Up

5. If not as specified, replace the necessary part.

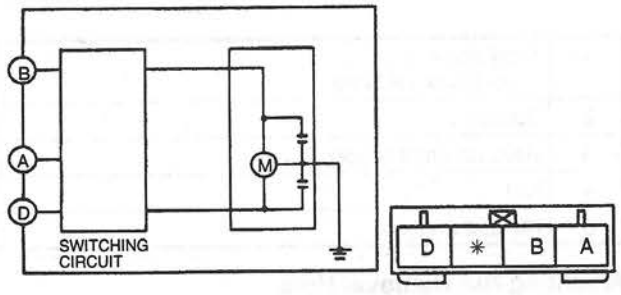

W6U920WAJ

POWER ANTENNA REMOVAL/INSTALLATION

W6U920W11

Caution

- **When installing the power antenna, not tightening the mounting nut fully could cause poor radio reception. When installing the power antenna, securely tighten the mounting nut according to the specified torque value.**

1. Disconnect the negative battery cable.
2. Turn over the trunk compartment covering from passenger's side. (Refer to 09–17 TRUNK COMPARTMENT COVERING REMOVAL/INSTALLATION.)
3. Remove in the order indicated in the table.
4. Install in the reverse order of removal.

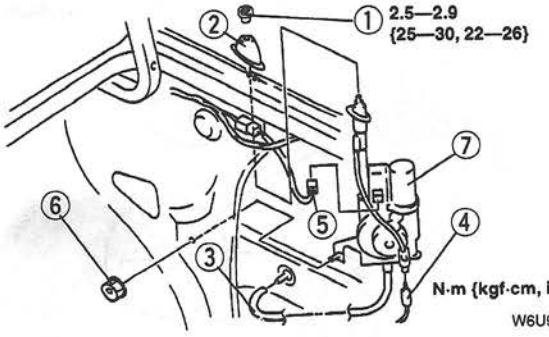

W6U920WAG

1	Mounting nut ☞ Removal Note
2	Spacer
3	Drain hose
4	Rear antenna feeder
5	Connector
6	Nut
7	Power antenna

Mounting Nut Removal Note

- Use snap-ring pliers to remove the mounting nut.

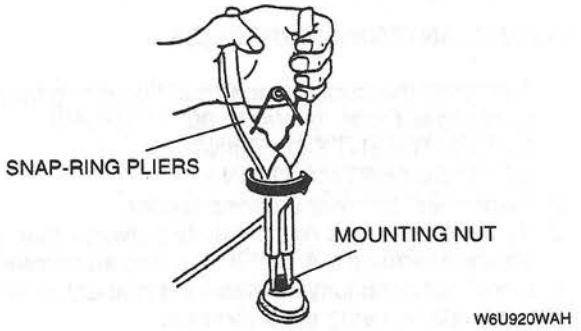

W6U920WAH

POWER ANTENNA DISASSEMBLY/ASSEMBLY

W6U920W12

1. Disassemble in the order indicated in the table.
2. Assemble in the reverse order of disassembly.

1	Drain hose
2	Bracket
3	Ground plate
4	O-ring
5	Rod insulator
6	Motor

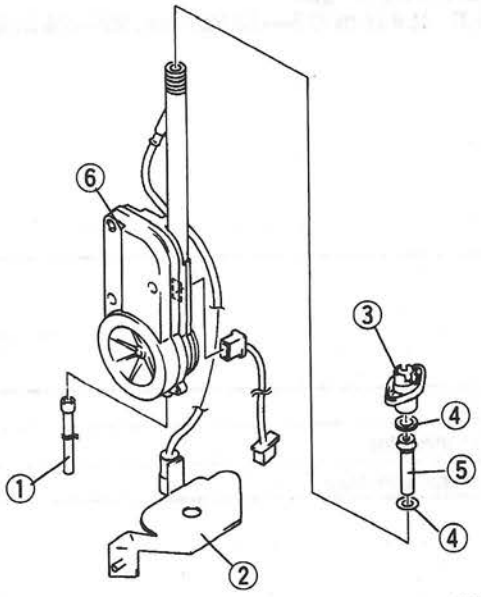

W6U920WAS

ANTENNA MAST REMOVAL

W6U920W14

Caution

- **Always remove the antenna mast with the power antenna installed in the vehicle. Removing the antenna mast from the removed power antenna may damage the power antenna or the antenna mast.**

1. Use snap-ring pliers to remove the mounting nut.

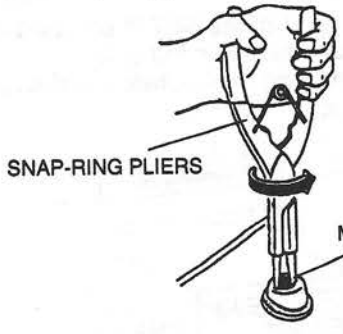

W6U920WAK

2. Turn the ignition switch to ON or ACC.
3. Turn the audio unit radio switch on.
4. Pull out the antenna mast after it fully extends.

ANTENNA MAST INSTALLATION

W6U920W15

Note

- This procedure is more easily carried out when done by two people.

1. Turn the ignition switch to ON or ACC.
2. Audio power switch is ON.
3. To turn on the radio, press AM/FM button.
4. To turn off the radio, audio power switch is off, then immediately insert the rack into the power antenna.

Note

- Straighten the warp of rack end.

5. Verify that the rack end fits with the internal gear of the power antenna.

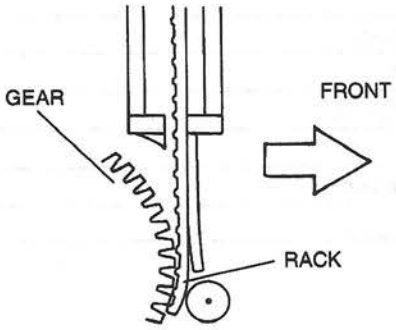

W6U920WAL

6. Turn the ignition switch to LOCK. The power antenna will operate and retract the antenna mast.
7. After the antenna mast is fully retracted, tighten the mounting nut to the specification.

Tightening torque
2.5—2.9 N·m {25—30 kgf·cm, 22—26 in·lbf}

AUDIO AMPLIFIER REMOVAL/INSTALLATION

W6U920W16

1. Disconnect the negative battery cable.
2. Remove the passenger's side front seat. (Refer to 09–13 FRONT SEAT REMOVAL/INSTALLATION.)
3. Remove in the order indicated in the table.
4. Install in the reverse order of removal.

1	Bolt
2	Connector
3	Audio amplifier

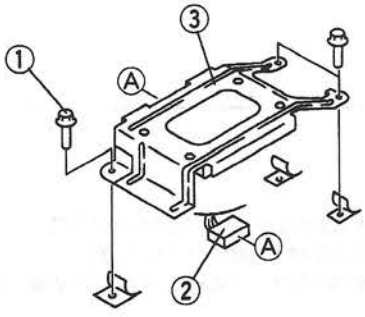

W6U920WAM

AUDIO UNIT REMOVAL

W6U920W17

1. Disconnect the negative battery cable.
2. Remove the hole covers by inserting a small tape-wrapped flathead screwdriver into the slot and carefully pry them off without scratching the center panel. Pry up and pull off the hole covers carefully to prevent the posts from breaking off.

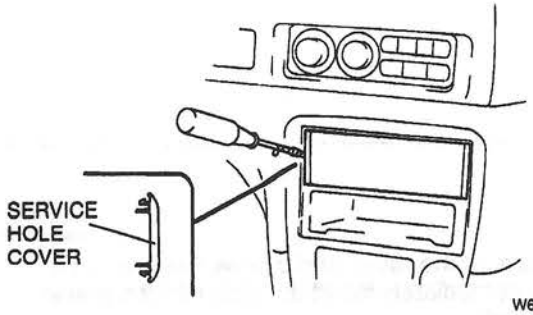

W6U920WAN

3. With the beveled parts of the **SST** (Removing tool) facing inward, insert them into the unit.
4. Pull the **SST** (Removing tool) outward and forward to slide out the unit.

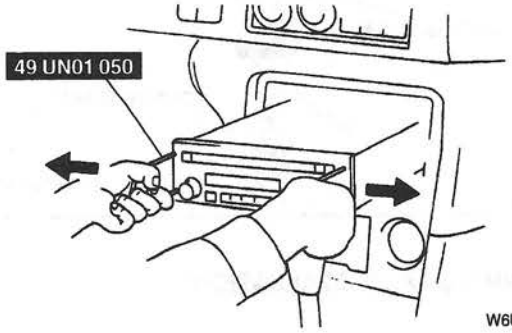

W6U920WAT

5. Disconnect the connectors and antenna jack.

AUDIO UNIT INSTALLATION

W6U920W18

Caution

- **Make certain that the wiring harness and antenna feeder are not caught between the unit and dashboard. If the harness or the antenna feeder is caught between the unit and dashboard, it may become the cause of trouble or malfunctions.**
- **To install audio unit, be sure to push service hole cover areas on both sides of the audio unit. If switches are pressed instead, it may become the cause of trouble or malfunctions.**

1. Connect the connectors and antenna jack.
2. Insert the unit until each clip click.
3. Install the service hole covers.
4. Connect the negative battery cable.

CIGARETTE LIGHTER INSPECTION

W6U920W19

1. Remove the socket. (Refer to 09–20 CIGARETTE LIGHTER REMOVAL/INSTALLATION.)
2. Verify the bimetals in the socket are not warped.
3. Check if the backs of the bimetals can be seen from the inside or outside.

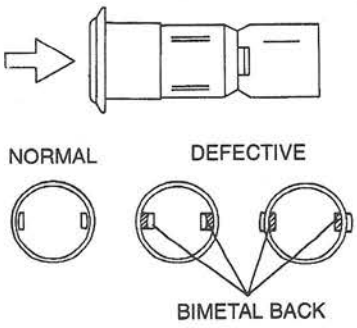

W6U920WAP

4. If the back of the bimetal can be seen from the inside, replace the socket.

CIGARETTE LIGHTER REMOVAL/INSTALLATION

W6U920W20

1. Disconnect the negative battery cable.
2. Remove the center panel. (Refer to 09–17 CENTER PANEL REMOVAL/INSTALLATION.)
3. Remove in the order indicated in the table.
4. Install in the reverse order of removal.

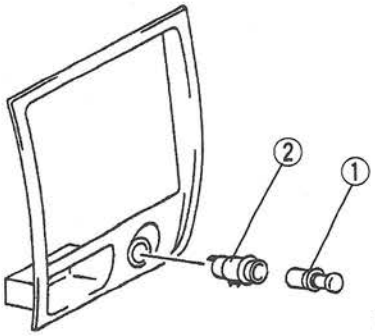

W6U920WAQ

1	Cigarette lighter plug
2	Socket ☞ Removal Note

Socket Removal Note

1. Pry up the stopper with the tape-wrapped flathead screwdriver.
2. Pull the socket with keeping to pry up the stopper.

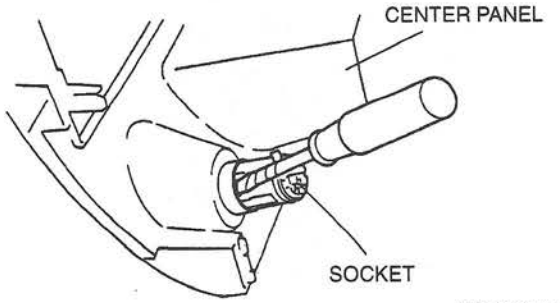

W6U920WAR

09–21 POWER SYSTEMS

FUSE SERVICE CAUTION 09–21–1
MAIN FUSE
REMOVAL/INSTALLATION 09–21–1
ROOM FUSE INSTALLATION 09–21–1
IGNITION SWITCH
REMOVAL/INSTALLATION 09–21–1
IGNITION SWITCH INSPECTION 09–21–2
KEY REMINDER SWITCH
INSPECTION 09–21–2

FUSE SERVICE CAUTION

W6U921W01

Caution

- **Determine and correct the cause of the burnt fuse before replacing it with the specified type. If the fuse is replaced before doing this, it may burn again.**

MAIN FUSE REMOVAL/INSTALLATION

W6U921W02

1. Disconnect the negative battery cable.
2. Remove the main fuse block cover.
3. Remove the main fuse block mounting nuts.
4. Remove the MAIN fuse mounting bolt to remove the MAIN fuse.
5. Install in the reverse order of removal.

ROOM FUSE INSTALLATION

W6U921W03

Note

- When the ROOM fuse is burnt or removed, the malfunction indicator lamp illuminates. If the ROOM fuse is replaced or installed with the ignition switch at ON, the malfunction indicator lamp will continue to illuminate.

1. Turn the ignition switch to LOCK.
2. Install the ROOM 10 A fuse.

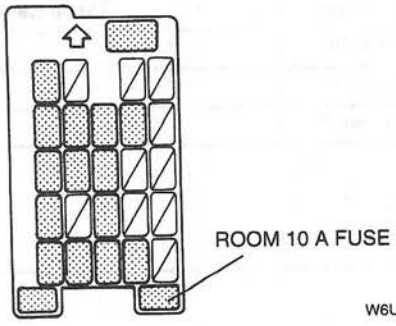

W6U921WA0

IGNITION SWITCH REMOVAL/INSTALLATION

W6U921W04

1. Disconnect the negative battery cable.
2. Remove the column cover.
3. Disconnect the ignition switch connector.
4. Remove the screw to remove the ignition switch.
5. Install in the reverse order of removal.

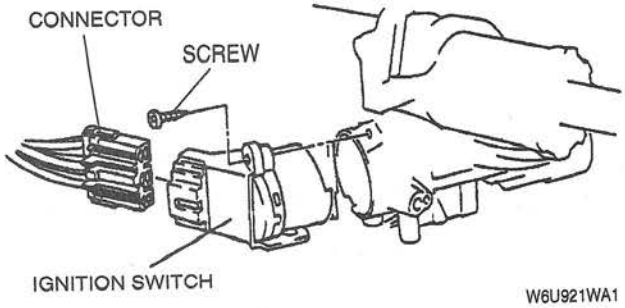

W6U921WA1

IGNITION SWITCH INSPECTION

1. Disconnect the negative battery cable.
2. Remove the column cover.
3. Disconnect the ignition switch connector.
4. Check for continuity between the ignition switch terminals by using an ohmmeter.

○—○ : Continuity

Ignition key position	Terminal					
	C	D	F	B	A	E
LOCK						
ACC	○		○			
ON	○	○	○	○	○	
START	○	○		○		○

W6U921WA2

W6U921W05

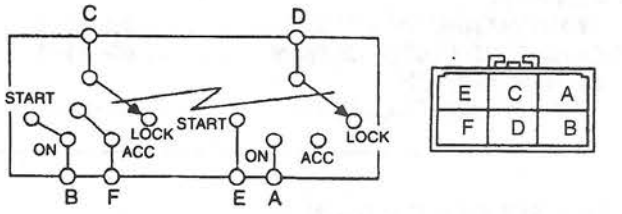

W6U921WA3

5. If not as specified, replace the ignition switch.

KEY REMINDER SWITCH INSPECTION

1. Disconnect the negative battery cable.
2. Remove the column cover.
3. Disconnect the key reminder switch connector.
4. Check for continuity between the key reminder switch terminals by using an ohmmeter.

○—○ : Continuity

Ignition key position	Terminal	
	A	B
key inserted	○	○
key removed		

W6U921WA4

W6U921W06

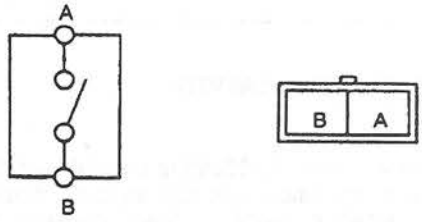

W6U921WA5

5. If not as specified, replace the steering lock. (Refer to 06–12 STEERING WHEEL AND COLUMN REMOVAL/INSTALLATION.)

09–22 INSTRUMENTATION/DRIVER INFO.

INSTRUMENT CLUSTER REMOVAL/INSTALLATION 09–22–1
INSTRUMENT CLUSTER DISASSEMBLY/ASSEMBLY 09–22–1
INSTRUMENT CLUSTER INSPECTION 09–22–2
Speedometer 09–22–2
Tachometer 09–22–2
Fuel Gauge 09–22–2
Water Temperature Gauge 09–22–2
INSTRUMENT CLUSTER INPUT/OUTPUT CHECK MODE 09–22–2
Diagnostic Trouble Code Chart 09–22–2
Operating Order 09–22–2
Checking Order 09–22–2
Cancel Order 09–22–2
Inspection of Diagnostic Trouble Codes 09–22–3
WARNING AND INDICATOR LIGHT BULB REMOVAL/INSTALLATION 09–22–6
FUEL GAUGE SENDER UNIT INSPECTION 09–22–6
OIL PRESSURE SWITCH INSPECTION 09–22–7
WATER TEMPERATURE SENDER UNIT REMOVAL 09–22–7
WATER TEMPERATURE SENDER UNIT INSTALLATION 09–22–7
WATER TEMPERATURE SENDER UNIT INSPECTION 09–22–7
HORN REMOVAL/INSTALLATION 09–22–8
HORN RELAY INSPECTION 09–22–8

INSTRUMENT CLUSTER REMOVAL/INSTALLATION

W6U922W01

1. Disconnect the negative battery cable.
2. Remove the meter hood. (Refer to 09–17 METER HOOD REMOVAL/INSTALLATION.)
3. Remove in the order indicated in the table.
4. Install in the reverse order of removal.

1	Screw
2	Connector
3	Instrument cluster

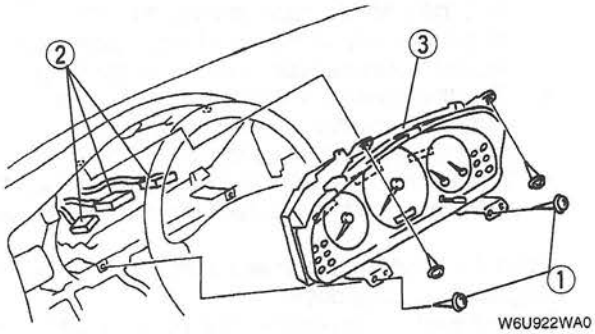

W6U922WA0

INSTRUMENT CLUSTER DISASSEMBLY/ASSEMBLY

W6U922W02

Caution

- **If the instrument cluster is dropped or damaged, the system will not operate properly and it may become the cause of trouble or malfunction.**

1. Disassemble in the order indicated in the table.
2. Assemble in the reverse order of disassembly.

1	Front glass
2	Window plate
3	Bulb
4	Screw
5	Print plate
6	Odometer/tripmeter switch lever
7	Display unit assembly
8	Warning lens
9	Case

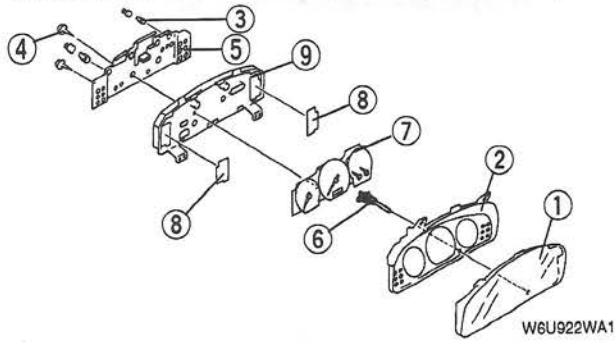

W6U922WA1

INSTRUMENT CLUSTER INSPECTION

W6U922W03

Speedometer
- Inspect the speedometer setting it in the input/output check mode. (Refer to 09–22 INSTRUMENT CLUSTER INPUT/OUTPUT CHECK MODE, Inspection of Diagnostic Trouble Codes, DTC 12.)

Tachometer
- Inspect the tachometer setting it in the input/output check mode. (Refer to 09–22 INSTRUMENT CLUSTER INPUT/OUTPUT CHECK MODE, Inspection of Diagnostic Trouble Codes, DTC 13.)

Fuel Gauge
- Inspect the fuel gauge setting it in the input/output check mode. (Refer to 09–22 INSTRUMENT CLUSTER INPUT/OUTPUT CHECK MODE, Inspection of Diagnostic Trouble Codes, DTC 23.)

Water Temperature Gauge
- Inspect the water temperature gauge setting it in the input/output check mode. (Refer to 09–22 INSTRUMENT CLUSTER INPUT/OUTPUT CHECK MODE, Inspection of Diagnostic Trouble Codes, DTC 25.)

INSTRUMENT CLUSTER INPUT/OUTPUT CHECK MODE

W6U922W12

Note
- In this mode, it is possible to check as following chart.

Diagnostic Trouble Code Chart

DTC	Checking item
10	Vehicle speedometer sensor
11	PCM
12	Speedometer
13	Tachometer
16	Fuel-level warning light
22	Fuel gauge sender unit
23	Fuel gauge
24	Water temperature sender unit
25	Water temperature gauge
26	LCD

Operating Order
1. Turn the ignition switch to LOCK.
2. Disconnect the negative battery cable.
3. Reconnect the negative battery cable after **30 seconds or more.**
4. Cycle the ignition switch to ON to LOCK **3 times.**
5. Turn the ignition switch to ON.
6. Push the odometer/tripmeter switch **3 times.**



W6U922WB0

Checking Order

Note
- The diagnostic trouble codes are displayed in numerical order. (While performing the inspection, if you want to inspect a diagnostic trouble code of which the number is smaller that the code number you are currently inspecting, terminate the check mode then repeat the inspection from the beginning)
- The diagnostic trouble codes can be fast forward by pushing and holding the odometer/tripmeter switch **1 second or more.**
- If rotate the wheels in the codes other than the DTC 10, cancel the input/output check mode.

1. Push the odometer/tripmeter switch and select the diagnostic trouble code.
2. Inspect each diagnostic trouble code by following the related inspection procedures. (Refer to 09–22 INSTRUMENT CLUSRTER INPUT/OUTPUT CHECK MODE, Inspection of Diagnostic Trouble Codes.)

Cancel Order
- Cancel the input/output check mode by turning the ignition switch to LOCK then back to ON.

Note
- Cancel the input/output check mode by leaving the instrument cluster in check mode for **approximately 45 minutes.**

Inspection of Diagnostic Trouble Codes

DTC 10	Vehicle speed input signal		
INSPECTION		INDICATION	ACTION
Start engine and drive the vehicle.		 W6U922WB1	Input signal to instrument cluster is okay.
		 W6U922WB2	• Check the vehicle speedometer sensor. • Check the wiring harness. (Instrument cluster — vehicle speedometer sensor)

DTC 11	Engine speed input signal		
INSPECTION		INDICATION	ACTION
Start engine.		 W6U922WB3	Input signal to instrument cluster is okay.
		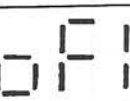 W6U922WB4	• Check the PCM. • Check the wiring harness. (Instrument cluster — PCM)

DTC 12	Operation signal to the speedometer		
INSPECTION	INDICATION	SITUATION	ACTION
Wait for **2 seconds** after selecting DTC 12.	(No indication)	Speedometer needle move full scale and then indicated **60 mph.**	Speedometer is okay.
		Other than above stated.	Replace the display unit assembly.

DTC 13	Operation signal to the tachometer		
INSPECTION	INDICATION	SITUATION	ACTION
Wait for **2 seconds** after selecting DTC 13.	(No indication)	Tachometer needle move full scale and then indicated **3000 rpm.**	Tachometer is okay.
		Other than above stated.	Replace the display unit assembly.

DTC 16	Operation signal to the fuel-level warning light		
INSPECTION	INDICATION	SITUATION	ACTION
Wait for **2 seconds** after selecting DTC 16.	(No indication)	Fuel-level warning light turns on and off **3 times.**	Fuel-level warning light is okay.
		Other than above stated.	Check the fuel-level warning light.

DTC 22	Fuel remaining amount input signal			
STEP	**INSPECTION**	**INDICATION**	**SITUATION**	**ACTION**
1	Check the LCD indication.	 W6U922WB5	—	• Check the fuel gauge sender unit. • Check the wiring harness. (Instrument cluster — fuel gauge sender unit)
		 W6U922WB6	—	• Check the fuel gauge sender unit. • Check the wiring harness. (Instrument cluster — fuel gauge sender unit — GND)
		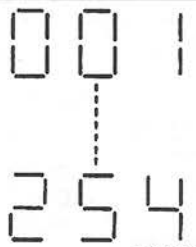 W6U922WB7	—	Go to next step.
2	Disconnect the fuel pump connector. Connect the red lead of **SST** (Fuel & Thermometer Checker) to terminal B of fuel pump connector and ground to the black lead. Set up the **SST** (Fuel & Thermometer Checker) resistance to **10 Ω**.	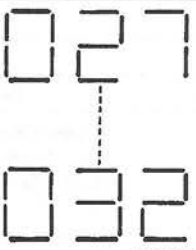 W6U922WB8	The LCD indication range is **27—32**.	Go to next step.
			Other than above stated.	Replace the display unit assembly.
3	Set up the **SST** (Fuel & Thermometer Checker) resistance to **55 Ω**.	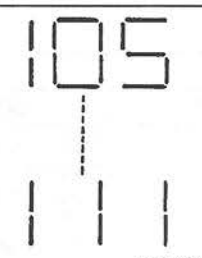 W6U922WB9	The LCD indication range is **105—111**.	Go to next step.
			Other than above stated.	Replace the display unit assembly.
4	Set up the **SST** (Fuel & Thermometer Checker) resistance to **100 Ω**.	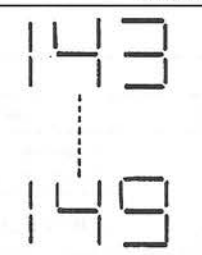 W6U922WBA	The LCD indication range is **143—149**.	Instrument cluster is okay.
			Other than above stated.	Replace the display unit assembly.

DTC 23	Operation signal to the fuel gauge		
INSPECTION	**INDICATION**	**SITUATION**	**ACTION**
Wait for **2 seconds** after selecting DTC 23.	(No indication)	Fuel gauge needle repeatedly points to **F, 1/2, E**.	Fuel gauge is okay.
		Other than above stated.	Replace the display unit assembly.

DTC 24	Water temperature input signal			
STEP	INSPECTION	INDICATION	SITUATION	ACTION
1	Check the LCD indication.	000 W6U922WBB	—	• Check the water temperature sender unit. • Check the wiring harness. (Instrument cluster — water temperature sender unit)
		255 W6U922WBC		
		001 ⋮ 254 W6U922WBD	—	Go to next step.
2	Disconnect the water temperature sender unit connector. Connect the red lead of **SST** (Fuel & Thermometer Checker) to terminal A of water temperature sender unit connector and ground to the black lead. Set up the **SST** (Fuel & Thermometer Checker) resistance to **23 Ω**.	086 ⋮ 092 W6U922WBE	The LCD indication range is **86—92**.	Go to next step.
			Other than above stated.	Replace the display unit assembly.
3	Set up the **SST** (Fuel & Thermometer Checker) resistance to **120 Ω**.	185 ⋮ 191 W6U922WBF	The LCD indication range is **185—191**.	Go to next step.
			Other than above stated.	Replace the display unit assembly.
4	Set up the **SST** (Fuel & Thermometer Checker) resistance to **230 Ω**.	213 ⋮ 218 W6U922WBH	The LCD indication range is **213—218**.	Instrument cluster is okay.
			Other than above stated.	Replace the display unit assembly.

DTC 25	Operation signal to the water temperature gauge		
INSPECTION	INDICATION	SITUATION	ACTION
Wait for **2 seconds** after selecting DTC 25.	(No indication)	Water temperature gauge needle repeatedly points to **H, neutral, C**.	Water temperature gauge is okay.
		Other than above stated.	Replace the display unit assembly.

DTC 26	LCD indication		
INSPECTION	**INDICATION**	**SITUATION**	**ACTION**
Wait for **2 seconds** after selecting DTC 26.	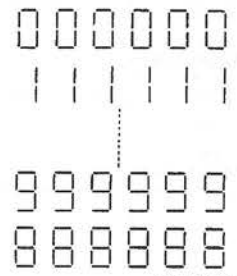 W6U922WBG (Display the number sequentially from 1 to 9 and all segment are displayed)	Indication is normal.	LCD is okay.
		Other than above stated.	Replace the display unit assembly.

WARNING AND INDICATOR LIGHT BULB REMOVAL/INSTALLATION

1. Disconnect the negative battery cable.
2. Remove the meter hood. (Refer to 09–17 METER HOOD REMOVAL/INSTALLATION.)
3. Remove the instrument cluster. (Refer to 09–22 INSTRUMENT CLUSTER REMOVAL/INSTALLATION.)
4. Turn the socket counterclockwise to remove the bulb as shown in the figure.

W6U922W04

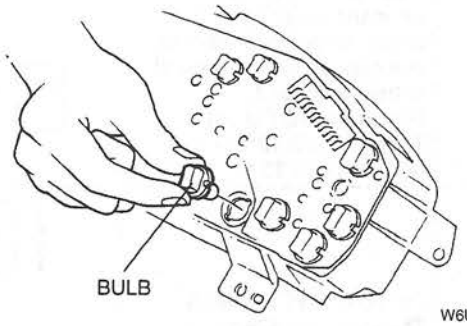

W6U922WA2

5. Install in the reverse order of removal.

FUEL GAUGE SENDER UNIT INSPECTION

1. Remove the fuel pump. (Refer to 01–14 FUEL PUMP REMOVAL/INSTALLATION.)
2. Using an ohmmeter, measure and verify that the resistance between terminal A and terminal D of the fuel gauge sender unit terminals as shown in the following chart while slowly moving the unit arm from empty to full.

Measuring point	Resistance (Ω)
Full	2.4—6.4
1/2	52—58
Empty	103.3—107.3

W6U922W05

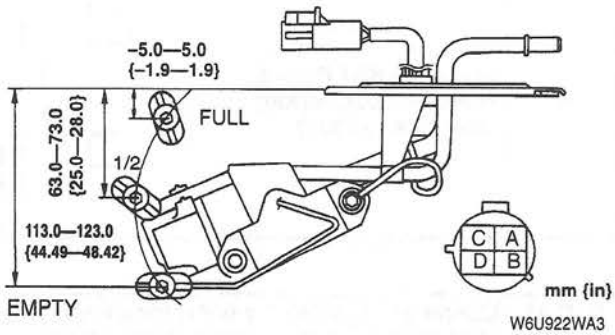

W6U922WA3

3. If not as specified, replace the fuel gauge sender unit. (Refer to 01–14 FUEL PUMP REMOVAL/INSTALLATION.)

OIL PRESSURE SWITCH INSPECTION

W6U922W06

1. Verify that the oil pressure warning light illuminates when the ignition switch is turned to ON.
2. Verify that the oil pressure warning light goes off when the engine is started.
3. If the oil pressure warning light does not illuminate or remains illuminated, inspect the oil pressure warning light bulb and related wiring harness.
4. If the oil pressure warning light bulb and related wiring harness are normal, inspect the oil pressure. (Refer to 01–11 OIL PRESSURE INSPECTION.)
5. If the oil pressure is normal, replace the oil pressure switch. (Refer to 01–11 OIL PRESSURE INSPECTION.)

WATER TEMPERATURE SENDER UNIT REMOVAL

W6U922W07

1. Disconnect the negative battery cable.
2. Disconnect the water temperature sender unit connector.
3. Remove the water temperature sender unit.

FS

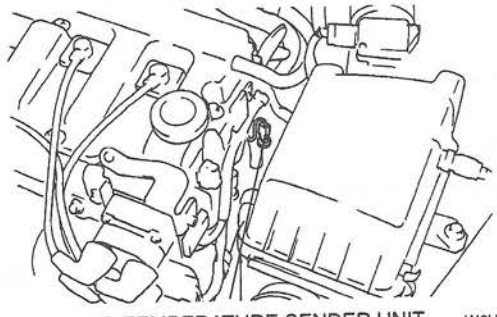

WATER TEMPERATURE SENDER UNIT W6U922WA4

KL

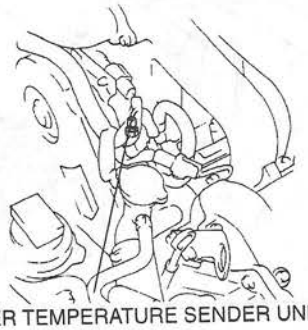

WATER TEMPERATURE SENDER UNIT W6U922WAE

WATER TEMPERATURE SENDER UNIT INSTALLATION

W6U922W08

1. Apply sealant from the third thread to the top thread.

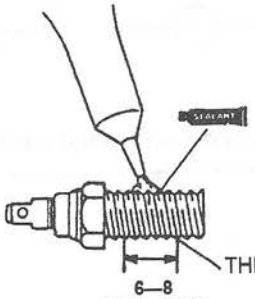

W6U922WA5

2. Install the water temperature sender unit.

Tightening torque
11.8—17.6 N·m
{120—180 kgf·cm, 105—156 in·lbf}

3. Connect the water temperature sender unit connector.
4. Connect the negative battery cable.

WATER TEMPERATURE SENDER UNIT INSPECTION

W6U922W09

1. Remove the water temperature sender unit.
2. Place the sender unit in a container of water.
3. Heat the water gradually.
4. Using an ohmmeter, measure and verify that the resistance between terminal of the sender unit and the sender unit body is as shown below.

Water temperature (°C {°F})	Resistance (Ω)
49.8—50.2 {121.7—122.3}	189.4—259.6

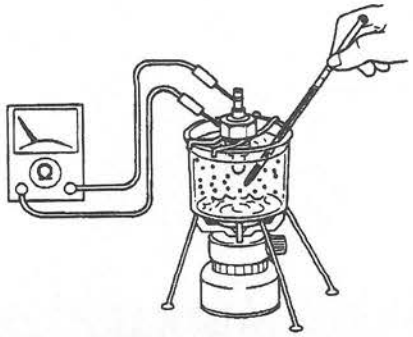

W6U922WA6

5. If not as specified, replace the water temperature sender unit.

HORN REMOVAL/INSTALLATION

W6U922W10

1. Disconnect the negative battery cable.
2. Remove the headlight. (Refer to 09–18 HEADLIGHT REMOVAL/INSTALLATION.)
3. Disconnect the horn connector.
4. Remove the bolt.
5. Remove the horn.

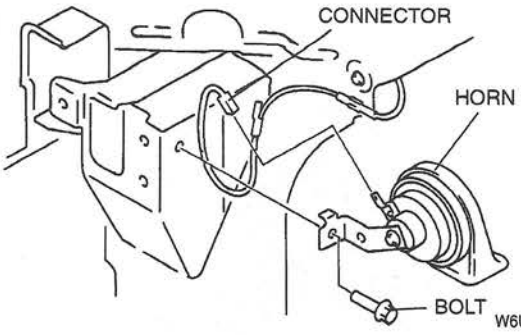

W6U922WA7

6. Install in the reverse order of removal.

HORN RELAY INSPECTION

W6U922W11

1. Remove the horn relay.
2. Check for continuity between the horn relay terminals by using an ohmmeter.

○—○ : Continuity

Step	Terminal			
	A	F	B	E
1	○	○		
2	B+	GND	○	○

W6U922WA8

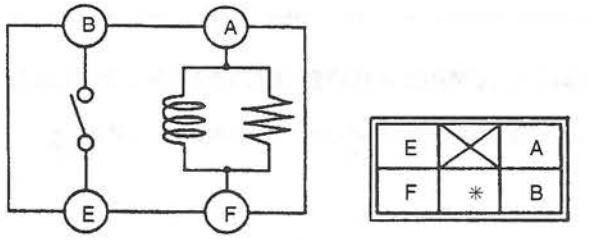

W6U922WA9

3. If not as specified, replace the horn relay.

09–40 CONTROL SYSTEM

CPU REMOVAL/INSTALLATION 09–40–1
CPU INSPECTION 09–40–1
Terminal Voltage List (Reference) 09–40–2

CPU REMOVAL/INSTALLATION

W6U940W01

1. Disconnect the negative battery cable.
2. Remove the driver's side front scuff plate.
3. Remove the driver's side front side trim.
4. Remove in the order indicated in the table.
5. Install in the reverse order of removal.

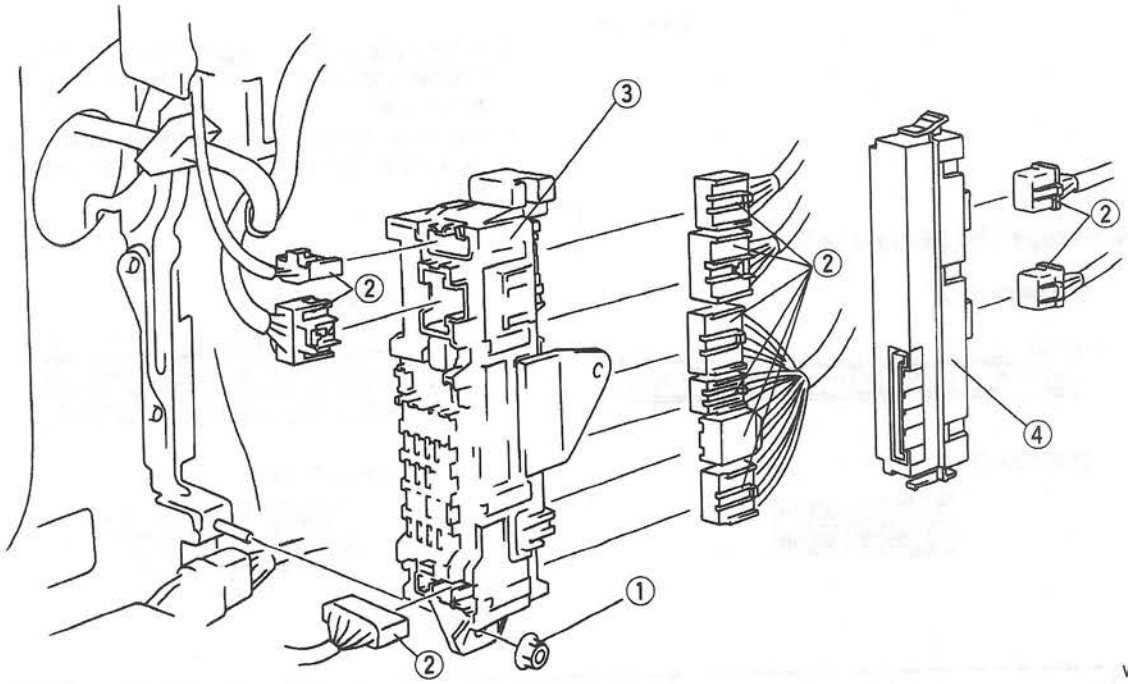

W6U940WA0

1	Nut
2	Connector

3	Joint box
4	CPU

CPU INSPECTION

W6U940W02

1. Remove the driver's side front scuff plate.
2. Remove the driver's side front side trim.
3. Remove the nut fixed in the joint box.
4. Follow the appropriate procedure, referring to the terminal voltage list.

All terminals of the connector A

Note

- The voltage cannot be measured nor can a continuity to ground check be performed at the terminals of connector A with the connectors connected to the joint box.

- Remove the CPU from the joint box, then measure the voltage or check for continuity to ground at the CPU terminals from the joint box side with the joint box connectors connected.

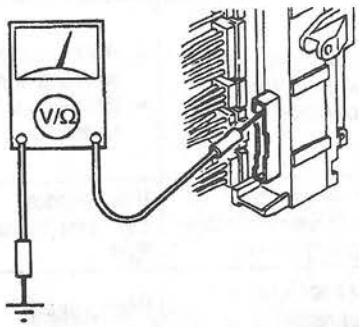

W6U940WA1

Terminals 4B and 4D of connector D

- Disconnect the CPU connector before checking for continuity at terminals 4B and 4D as shown in the figure.

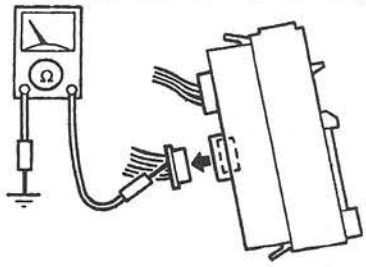

W6U940WA2

Terminals except 4B and 4D of connector D

- Measure the voltage at the CPU connector while it is connected with the CPU as shown in the figure.

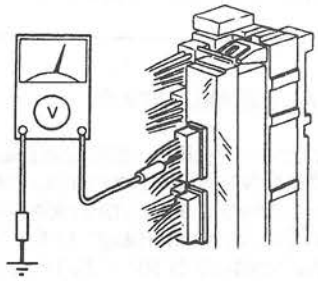

W6U940WA3

5. If not as specified, inspect the parts listed under "Inspection area" and the related wiring harnesses.
6. If the parts and wiring harnesses are okay but system still does not work properly, replace the CPU.

Terminal Voltage List (Reference)

CONNECTOR A

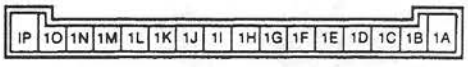

CONNECTOR B



CONNECTOR C



CONNECTOR D



W6U940WA4

Terminal	Signal	Connection	Test condition		Voltage (V)/ Continuity	Inspection area
1A	Trunk lid open/closed	• Trunk compartment light • Trunk compartment light switch	Trunk lid open		0	• ROOM 15 A fuse • Trunk compartment light • Trunk compartment light switch
			Trunk lid closed		B+	
1B	Key inserted/ removed	Key reminder switch	Key inserted into steering lock		B+	• ROOM 15 A fuse • Key reminder switch
			Key removed from steering lock		0	
1C	ACC	RADIO 15 A fuse	Ignition switch at ACC or ON		B+	RADIO 15 A fuse
			Ignition switch at LOCK		0	
1D	Brake system warning light operation	• Brake system warning light • Brake fluid level sensor	Ignition switch at ON	Brake fluid level is below MIN.	0	• METER 10 A fuse • Instrument cluster • Brake fluid level sensor
				Brake fluid level is above MIN.	B+	
1E	Rear window defroster indicator light operation	Rear window defroster indicator light	Ignition switch at ON		B+	• METER 10 A fuse • Instrument cluster
			Ignition switch at LOCK or ACC		0	
1F	Interior light operation	Interior light	Interior light switch at Door		B+	• ROOM 15 A fuse • Interior light
			Interior light switch at ON or OFF		0	

Terminal	Signal	Connection	Test condition	Voltage (V)/ Continuity	Inspection area
1G	CPU ground	GND	Constant: check for continuity to ground	Yes	GND
1H	Door ajar warning light operation	Door ajar warning light	Ignition switch at ON	B+	• METER 10 A fuse • Instrument cluster
			Ignition switch at LOCK or ACC	0	
1I	Door open/closed	Door switch	Any door open: check for continuity to ground	Yes	Door switch
			All doors closed: check for continuity to ground	No	
1J	Power supply	ROOM 15 A fuse	Constant	B+	ROOM 15 A fuse
1K	Power door lock one-touch system input	Door lock switch	Door lock switch (LOCK) pushed: measure resistance between to ground	Yes (1 kΩ)	Door lock switch
			Door lock swtich (UNLOCK) pushed: check for continuity to ground	Yes	
			Door lock switch released: check for continuity to ground	No	
1L	—	Not used	—	—	—
1M	IG1	METER 10 A fuse	Ignition switch at ON	B+	METER 10 A fuse
			Ignition switch at LOCK or ACC	0	
1N	Rear window defroster switch on/off	Rear window defroster switch	Rear window defroster switch pushed: check for continuity to ground	Yes	Rear window defroster switch
			Rear window defroster switch released: check for continuity to ground	No	
1O	Seat belt buckled/unbuckled	• Seat belt warning light • Buckle switch	Ignition switch at ON — Driver's side seat belt buckled	B+	• METER 10 A fuse • Instrument cluster • Buckle switch
			Ignition switch at ON — Driver's side seat belt unbuckled	0	
1P	Parking brake lever pulled/ released	Parking brake switch	Parking brake lever pulled: check for continuity to ground	Yes	Parking brake switch
			Parking brake lever released: check for continuity to ground	No	
2A	Horn pad pushed	• Horn relay • Horn switch	Horn switch on	0	• HORN 15 A fuse • Horn relay • Horn switch
			Horn switch off	B+	
2B	Power door lock system output (door lock)	Door lock timer unit 1	Door locked	B+→0→B+	• D.LOCK 30 A fuse • Door lock timer unit 1
			Other	B+	
2C	Security light operation	Security light	Security light turns on	0	• ROOM 15 A fuse • Instrument cluster
			Security light turns off	B+	
2D	Power door lock system output (trunk unlock)	Door lock timer unit 2	Trunk lid unlocked	B+→0→B+	• D.LOCK 30 A fuse • Door lock timer unit 2
			Other	B+	
2E	Flasher unit operation	• Flasher unit • Hazard warning switch	Hazard warning switch on	0	• HAZARD 15 A fuse • Flasher unit • Hazard warning switch
			Hazard warning switch off	B+	
2F	Power door lock system output (driver's side door unlock)	Door lock timer unit 2	Driver's side door unlocked	B+→0→B+	• D.LOCK 30 A fuse • Door lock timer unit 2
			Other	B+	

Terminal	Signal	Connection	Test condition		Voltage (V)/ Continuity	Inspection area
2G	—	Not used	—		—	—
2H	Power door lock system output (door unlock)	Door lock timer unit 1	Door unlocked		B+→0→B+	• D.LOCK 30 A fuse • Door lock timer unit 1
			Other		B+	
2I	—	Not used	—		—	—
2J	Trunk key cylinder switch unlock	Trunk key cylinder switch	Trunk key cylinder switch at unlock position		0	Trunk key cylinder switch
			Other		5	
2K	—	Not used	—		—	—
2L	—	Not used	—		—	—
2M	—	Not used	—		—	—
2N	—	Not used	—		—	—
2O	Power door lock system input	Keyless unit	Transmitter lock button pressed		5→approx. 3.5→5	• ROOM 15 A fuse • Keyless unit
			Transmitter unlock button pressed		5→approx. 1.7→5	
			Transmitter trunk button pressed		5→approx. 0→5	
			Other		5	
2P	—	Not used	—		—	—
3A	Headlight relay operation	Headlight relay	Headlight switch at 2nd position		0	• HEAD 30 A circuit breaker • Headlight relay
			Headlight switch at OFF or 1st position		B+	
3B	Headlight switch on/off	Headlight switch	Headlight switch at 2nd position		0	Light switch
			Headlight switch at OFF or 1st position		5	
3C	Hood open/closed	Hood switch	Hood open		0	Hood switch
			Hood closed		5	
3D	—	Not used	—		—	—
3F	Rear window defroster relay operation	Rear window defroster relay	Ignition switch at ON	Rear window defroster switch on	0	• DEFOG 40 A circuit breaker • Rear window defroster relay
				Other	B+	
3H	—	Not used	—		—	—
3I	TNS switch on/off	Headlight switch	Headlight switch at 1st or 2nd position		0	Light switch
			Headlight switch at OFF		5	
3J	TNS relay operation	TNS relay	Headlight switch at 1st or 2nd position		0	• TAIL 15 A fuse • TNS relay
			Headlight switch at OFF		B+	
4A	LH headlight operation (low beam)	LH headlight (low beam)	Headlight switch at 2nd position	Dimmer switch at LO	0	• H/L-L 15 A fuse • LH headlight
				Dimmer switch at HI	B+	
4B	CPU ground	GND	Constant: check for continuity to ground		Yes	GND
4C	RH headlight operation (low beam)	RH headlight (low beam)	Headlight switch at 2nd position	Dimmer switch at LO	0	• H/L-R 15 A fuse • RH headlight
				Dimmer switch at HI	B+	
4D	CPU ground	GND	Constant: check for continuity to ground		Yes	GND

Terminal	Signal	Connection	Test condition		Voltage (V)/ Continuity	Inspection area
4E	Headlight relay operation	Headlight relay	Headlight switch at 2nd position		0	• HEAD 30 A circuit breaker • Headlight relay
			Headlight switch at OFF or 1st position		B+	
4F	Headlight switch on/off	Headlight switch	Headlight switch at 2nd position		0	Light switch
			Headlight switch at OFF or 1st position		5	
4H	High beam on/off	Headlight switch	Dimmer switch at HI		0	Light switch
			Dimmer switch at LO		5	
4J	Rear window defroster relay operation	Rear window defroster relay	Ignition switch at ON	Rear window defroster switch on	0	• DEFOG 40 A circuit breaker • Rear window defroster relay
				Other	B+	
4K	Headlight high relay operation	Headlight high relay	Headlight switch at 2nd position	Dimmer switch at LO	B+	• TAIL 15 A fuse • Headlight high relay
				Dimmer switch at HI	0	
4L	—	Not used	—		—	—
4M	TNS switch on/off	Headlight switch	Headlight switch at 1st or 2nd position		0	Light switch
			Headlight switch at OFF		5	
4N	TNS relay operation	TNS relay	Headlight switch at 1st or 2nd position		0	• TAIL 15 A fuse • TNS relay
			Headlight switch at OFF		B+	

09–50 TECHNICAL DATA

09 BODY & ACCESSORIES 09–50–1

09 BODY & ACCESSORIES

W6U950W01

Item		Specifications (W) × number
LIGHTING SYSTEMS		
Exterior lights	Headlight	60/55 × 2
	Parking light	8 × 2
	Front turn light	27 × 2
	Brake light/taillight	27/7 × 4
	Rear turn light	27 × 2
	Back-up light	18 × 2
	License plate light	5 × 2
	High-mount brake light	27 × 1
Interior lights	Interior light	8 × 1
	Vanity mirror illumination	1.4 × 4
	Trunk compartment light	5 × 1
	Instrument cluster illumination	3.4 × 3, 1.4× 1
INSTRUMENTATION/DRIVER INFO.		
Warning and indicator lights	ABS warning light	1.4 × 1
	Air bag system warning light	1.4 × 1
	Brake system warning light	1.4 × 1
	Cruise set indicator light	1.4 × 1
	Door ajar warning light	1.4 × 1
	Fuel-level warning light	1.4 × 1
	Generator warning light	1.4 × 1
	High beam indicator light	1.4 × 1
	Malfunction indicator lamp	1.4 × 1
	O/D OFF indicator light	1.4 × 1
	Oil pressure warning light	1.4 × 1
	Rear window defroster indicator light	1.4 × 1
	Seat belt warning light	1.4 × 1
	Security light	1.4 × 1
	TCS indicator light	1.4 × 1
	TCS OFF light	1.4 × 1
	Turn indicator light	3.4 × 2
	Washer fluid-level warning light	1.4 × 1

09–60 SERVICE TOOLS

09 BODY & ACCESSORIES SST 09–60–1

09 BODY & ACCESSORIES SST

W6U960W01

49 0305 870A Window tool set 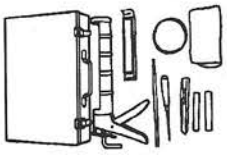 T0305870A	49 T088 0A0 New generation star tester set  TT0880A0X	49 0839 285 Fuel and thermometer checker 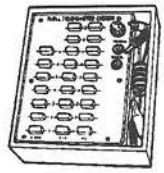 T0839285X
49 G050 1A0 Sealant remover  TG0501A0X	49 T088 010E Program card  TT088010E	49 UN01 050 Radio removing tool  TUN01050X
49 UN01 130 104 Pin Breakout Box 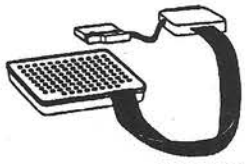 TUN01130X	—	—

ALPHABETICAL INDEX

AI SECTION

A

A-PILLAR TRIM REMOVAL/INSTALLATION 09–17–10
A/C COMPRESSOR REMOVAL/INSTALLATION 07–11–8
A/C RELAY, BLOWER RELAY, AND CONDENSER FAN RELAY INSPECTION 07–40–11
ABBREVIATIONS 00–00–19
ABS HARNESS AND INPUT SIGNAL INSPECTION 04–13–4
ABS HYDRAULIC UNIT AND CONTROL MODULE REMOVAL/INSTALLATION ... 04–13–2
ABS HYDRAULIC UNIT INSPECTION 04–13–1
ABS/TCS CONTROL MODULE REMOVAL/INSTALLATION 04–14–1
ABS/TCS HARNESS AND INPUT SIGNAL INSPECTION 04–14–1
ACCELERATOR CABLE INSPECTION/ADJUSTMENT [FS] 01–13A–4
ACCELERATOR CABLE INSPECTION/ADJUSTMENT [KL] 01–13B–6
ACCELERATOR PEDAL REMOVAL/INSTALLATION [FS] 01–13A–3
ACCELERATOR PEDAL REMOVAL/INSTALLATION [KL] 01–13B–5
ACCUMULATOR TANK REMOVAL/INSTALLATION 07–11–10
ACTUATOR CABLE ADJUSTMENT 01–20–3
ACTUATOR CABLE REMOVAL/INSTALLATION 01–20–3
AFTER REPAIR PROCEDURE 01–14–1
AIR BAG MODULES DEPLOYMENT AUTHORIZATION PROCEDURES 08–10–6
AIR BAG MODULES DEPLOYMENT PROCEDURES 08–10–7
AIR BAG MODULES DISPOSAL PROCEDURES 08–10–10
AIR BAG SYSTEM ON-BOARD DIAGNOSIS 08–01A–2
AIR BAG SYSTEM SERVICE WARNINGS 08–10–1
AIR BAG SYSTEM SYMPTOM TROUBLESHOOTING 08–01A–10
AIR BLEEDING 04–11–1
AIR BLEEDING 06–12–1
AIR FILTER INSPECTION 01–16–4
AIR INTAKE ACTUATOR INSPECTION ... 07–40–4
AIR INTAKE ACTUATOR REMOVAL/INSTALLATION 07–40–4
AIR MIX ACTUATOR INSPECTION 07–40–5
AIR MIX ACTUATOR REMOVAL/INSTALLATION 07–40–5
AIRDAM SKIRT REMOVAL/INSTALLATION 09–16–7
AIRFLOW MODE ACTUATOR INSPECTION 07–40–6
AIRFLOW MODE ACTUATOR REMOVAL/INSTALLATION 07–40–6
AIRFLOW MODE MAIN LINK REMOVAL/INSTALLATION 07–11–7
ANTENNA MAST INSTALLATION 09–20–7
ANTENNA MAST REMOVAL 09–20–7
ANTILOCK BRAKE SYSTEM AND TRACTION CONTROL SYSTEM ON-BOARD DIAGNOSIS 04–01–2
ANTILOCK BRAKE SYSTEM AND TRACTION CONTROL SYSTEM SYMPTOM TROUBLESHOOTING 04–01–12
AUDIO AMPLIFIER REMOVAL/INSTALLATION 09–20–8
AUDIO SYMPTOM TROUBLESHOOTING 09–01N–1
AUDIO UNIT INSTALLATION 09–20–9
AUDIO UNIT REMOVAL 09–20–8
AUTOMATIC TRANSAXLE BASIC INSPECTION [GF4A-EL] 05–01B–20
AUTOMATIC TRANSAXLE BASIC INSPECTION [LA4A-EL] 05–01A–32
AUTOMATIC TRANSAXLE FLUID (ATF) INSPECTION [GF4A-EL] 05–17B–8
AUTOMATIC TRANSAXLE FLUID (ATF) INSPECTION [LA4A-EL] 05–17A–7
AUTOMATIC TRANSAXLE FLUID (ATF) REPLACEMENT [GF4A-EL] 05–17B–10
AUTOMATIC TRANSAXLE FLUID (ATF) REPLACEMENT [LA4A-EL] 05–17A–8
AUTOMATIC TRANSAXLE ON BOARD DIAGNOSIS [GF4A-EL] 05–01B–1
AUTOMATIC TRANSAXLE ON BOARD DIAGNOSIS [LA4A-EL] 05–01A–2
AUTOMATIC TRANSAXLE REMOVAL/INSTALLATION [GF4A-EL] . 05–17B–19
AUTOMATIC TRANSAXLE REMOVAL/INSTALLATION [LA4A-EL] . 05–17A–20
AUTOMATIC TRANSAXLE SYMPTOM TROUBLESHOOTING [GF4A-EL] 05–01B–21
AUTOMATIC TRANSAXLE SYMPTOM TROUBLESHOOTING [LA4A-EL] 05–01A–33

B

B-PILLAR LOWER TRIM REMOVAL/INSTALLATION 09–17–11
B-PILLAR UPPER TRIM REMOVAL/INSTALLATION 09–17–11
BACK-UP LIGHT SWITCH INSPECTION . 09–18–5

BACK-UP LIGHT SWITCH
REMOVAL/INSTALLATION 09–18–5
BASE INSTALLATION 09–12–20
BASE REMOVAL 09–12–20
BASIC SYSTEM STRUCTURAL VIEW ... 07–11–2
BATTERY INSPECTION 01–17–1
BATTERY RECHARGING 01–17–2
BATTERY REMOVAL/INSTALLATION 01–17–1
BEFORE REPAIR PROCEDURE 01–14–1
BLOWER MOTOR INSPECTION 07–40–7
BLOWER MOTOR
REMOVAL/INSTALLATION 07–40–7
BLOWER RELAY
REMOVAL/INSTALLATION 07–40–11
BLOWER UNIT
DISASSEMBLY/ASSEMBLY 07–11–3
BLOWER UNIT REMOVAL/INSTALLATION 07–11–3
BOOT PANEL DISASSEMBLY/ASSEMBLY 09–17–4
BOOT PANEL REMOVAL/INSTALLATION . 09–17–4
BRAKE FLUID 04–11–2
BRAKE PEDAL INSPECTION 04–11–4
BRAKE PEDAL REMOVAL/INSTALLATION 04–11–5
BRAKE PIPE INSPECTION 04–11–2
BRAKE PIPE REMOVAL/INSTALLATION . 04–11–3
BRAKE SWITCH INSPECTION 04–11–6
BUCKLE SWITCH INSPECTION 08–11–3

C

C-PILLAR TRIM
REMOVAL/INSTALLATION 09–17–12
CAMSHAFT POSITION SENSOR
INSPECTION [FS] 01–40A–16
CAMSHAFT POSITION SENSOR
INSPECTION [KL] 01–40B–17
CAMSHAFT POSITION SENSOR
REMOVAL/INSTALLATION [KL] 01–40B–17
CANISTER DRAIN CUT VALVE (CDCV)
INSPECTION 01–16–5
CATCH TANK INSPECTION 01–16–6
CENTER LOWER PANEL
REMOVAL/INSTALLATION 09–17–4
CENTER PANEL
REMOVAL/INSTALLATION 09–17–5
CHARCOAL CANISTER INSPECTION ... 01–16–5
CIGARETTE LIGHTER INSPECTION 09–20–9
CIGARETTE LIGHTER
REMOVAL/INSTALLATION 09–20–9
CLOCK SPRING ADJUSTMENT 08–10–3
CLOCK SPRING INSPECTION 08–10–4
CLOCK SPRING
REMOVAL/INSTALLATION 08–10–5
CLUTCH COVER INSPECTION 05–10–9
CLUTCH DISC INSPECTION 05–10–10
CLUTCH FLUID INSPECTION 05–10–1
CLUTCH FLUID REPLACEMENT 05–10–1
CLUTCH MASTER CYLINDER
DISASSEMBLY/ASSEMBLY 05–10–5
CLUTCH MASTER CYLINDER
REMOVAL/INSTALLATION 05–10–4
CLUTCH PEDAL ADJUSTMENT 05–10–2
CLUTCH PEDAL
REMOVAL/INSTALLATION 05–10–3
CLUTCH RELEASE COLLAR
INSPECTION 05–10–10
CLUTCH RELEASE CYLINDER
DISASSEMBLY/ASSEMBLY 05–10–6
CLUTCH RELEASE CYLINDER
REMOVAL/INSTALLATION 05–10–6
CLUTCH SWITCH INSPECTION [FS] .. 01–40A–28
CLUTCH SWITCH INSPECTION [KL] .. 01–40B–30
CLUTCH SWITCH
REMOVAL/INSTALLATION [FS] 01–40A–29
CLUTCH SWITCH
REMOVAL/INSTALLATION [KL] 01–40B–31
CLUTCH UNIT REMOVAL/INSTALLATION 05–10–7
CODE WORD INPUT PROCEDURE 09–14–23
COIL REMOVAL/INSTALLATION 09–14–17
COLUMN COVER
REMOVAL/INSTALLATION 09–17–5
COMBINATION SWITCH
DISASSEMBLY/ASSEMBLY 09–18–6
COMBINATION SWITCH
REMOVAL/INSTALLATION 09–18–5
COMPRESSION INSPECTION [FS] 01–10A–4
COMPRESSION INSPECTION [KL] 01–10B–5
CONDENSER FAN INSPECTION 07–40–8
CONDENSER FAN RELAY
REMOVAL/INSTALLATION 07–40–11
CONDENSER FAN
REMOVAL/INSTALLATION 07–40–8
CONDENSER INSPECTION 07–11–10
CONDENSER REMOVAL/INSTALLATION 07–11–9
CONTROL SYSTEM COMPONENT
LOCATION [FS] 01–40A–2
CONTROL SYSTEM COMPONENT
LOCATION [KL] 01–40B–2
CONTROL SYSTEM STRUCTURAL VIEW 07–40–2
CONTROL VALVE BODY AND TERMOSTATIC
OIL LEVEL CONTROL VALVE
REMOVAL/INSTALLATION [LA4A-EL] 05–17A–27
CONTROL VALVE BODY
REMOVAL/INSTALLATION [GF4A-EL] . 05–17B–26
COOLING FAN MOTOR INSPECTION ... 01–12–7
COOLING FAN MOTOR
REMOVAL/INSTALLATION 01–12–7
COOLING FAN RELAY INSPECTION 01–12–8
COOLING SYSTEM SERVICE WARNINGS 01–12–1
COOLING UNIT
DISASSEMBLY/ASSEMBLY 07–11–5
COOLING UNIT
REMOVAL/INSTALLATION 07–11–4
COWL GRILLE REMOVAL/INSTALLATION 09–16–2
CPU INSPECTION 09–40–1
CPU REMOVAL/INSTALLATION 09–40–1
CRANKSHAFT POSITION SENSOR
INSPECTION [FS] 01–40A–17
CRANKSHAFT POSITION SENSOR
INSPECTION [KL] 01–40B–19
CRANKSHAFT POSITION SENSOR
REPLACEMENT [FS] 01–40A–17
CRANKSHAFT POSITION SENSOR
REPLACEMENT [KL] 01–40B–19
CRUISE ACTUATOR INSPECTION 01–20–2
CRUISE ACTUATOR
REMOVAL/INSTALLATION 01–20–1
CRUISE CONTROL SWITCH
INSPECTION 01–20–4
CRUISE CONTROL SWITCH
REMOVAL/INSTALLATION 01–20–4

CRUISE CONTROL SYSTEM SYMPTOM TROUBLESHOOTING 01–01C–1
CYLINDER HEAD GASKET REPLACEMENT [FS] 01–10A–8
CYLINDER HEAD GASKET REPLACEMENT [KL] 01–10B–10

D

DASHBOARD DISASSEMBLY/ASSEMBLY 09–17–3
DASHBOARD REMOVAL/INSTALLATION . 09–17–2
DEFLECTOR REMOVAL/INSTALLATION . 09–15–3
DOOR LOCK SWITCH INSPECTION 09–14–6
DOOR LOCK SWITCH REMOVAL/INSTALLATION 09–14–5
DOOR LOCK TIMER UNIT 1 INSPECTION 09–14–7
DOOR LOCK TIMER UNIT 1 REMOVAL/INSTALLATION 09–14–6
DOOR LOCK TIMER UNIT 2 INSPECTION 09–14–8
DOOR LOCK TIMER UNIT 2 REMOVAL/INSTALLATION 09–14–7
DOOR SPEAKER INSPECTION 09–20–1
DOOR SPEAKER REMOVAL/INSTALLATION 09–20–1
DOOR SWITCH INSPECTION 09–18–13
DOOR SWITCH REMOVAL/INSTALLATION 09–18–13
DRIVE BELT ADJUSTMENT [FS] 01–10A–2
DRIVE BELT ADJUSTMENT [KL] 01–10B–2
DRIVE BELT INSPECTION [FS] 01–10A–1
DRIVE BELT INSPECTION [KL] 01–10B–1
DRIVE PLATE REMOVAL/INSTALLATION [GF4A-EL] 05–17B–30
DRIVE PLATE REMOVAL/INSTALLATION [LA4A-EL] 05–17A–35
DRIVER-SIDE AIR BAG MODULE REMOVAL/INSTALLATION 08–10–2
DUAL PROPORTIONING VALVE INSPECTION 04–11–11
DUAL PROPORTIONING VALVE REPLACEMENT 04–11–11

E

EGR BOOST SENSOR INSPECTION [FS] 01–40A–23
EGR BOOST SENSOR INSPECTION [KL] 01–40B–25
EGR BOOST SOLENOID VALVE INSPECTION 01–16–8
EGR VALVE INSPECTION 01–16–7
EGR VALVE REMOVAL/INSTALLATION [FS] 01–16–6
EGR VALVE REMOVAL/INSTALLATION [KL] 01–16–7
ELECTRICAL SYSTEM 00–00–13
ELECTRICAL SYSTEM COMPONENTS [LA4A-EL] 05–17A–9
EMISSION SYSTEM (ENGINE COMPARTMENT SIDE) COMPONENT LOCATION [FS] 01–16–1
EMISSION SYSTEM (ENGINE COMPARTMENT SIDE) COMPONENT LOCATION [KL] 01–16–2
EMISSION SYSTEM (FUEL TANK SIDE) COMPONENT REMOVAL/INSTALLATION 01–16–3
ENGINE COOLANT LEAKAGE INSPECTION 01–12–3
ENGINE COOLANT LEVEL INSPECTION 01–12–1
ENGINE COOLANT REPLACEMENT 01–12–2
ENGINE COOLANT TEMPERATURE SENSOR INSPECTION [FS] 01–40A–20
ENGINE COOLANT TEMPERATURE SENSOR INSPECTION [KL] 01–40B–22
ENGINE DIAGNOSTIC INSPECTION [FS] 01–01A–169
ENGINE DIAGNOSTIC INSPECTION [KL] 01–01B–173
ENGINE DISASSEMBLY/ASSEMBLY [FS] 01–10A–15
ENGINE DISASSEMBLY/ASSEMBLY [KL] 01–10B–18
ENGINE OIL LEVEL INSPECTION 01–11–1
ENGINE OIL REPLACEMENT 01–11–1
ENGINE ON-BOARD DIAGNOSIS [FS] .. 01–01A–2
ENGINE ON-BOARD DIAGNOSIS [KL] .. 01–01B–1
ENGINE REMOVAL/INSTALLATION [FS] 01–10A–13
ENGINE REMOVAL/INSTALLATION [KL] 01–10B–17
ENGINE SYMPTOM TROUBLESHOOTING [FS] 01–01A–122
ENGINE SYMPTOM TROUBLESHOOTING [KL] 01–01B–128
ENGINE SYSTEM INSPECTION [FS] 01–01A–172
ENGINE SYSTEM INSPECTION [KL] . 01–01B–176
ENGINE TUNE-UP [FS] 01–10A–16
ENGINE TUNE-UP [KL] 01–10B–19
EVAPORATIVE GAS CHECK VALVE (TWO-WAY) INSPECTION 01–16–3
EVAPORATOR INSPECTION 07–11–5
EXHAUST SYSTEM INSPECTION 01–15–1
EXHAUST SYSTEM REMOVAL/INSTALLATION [FS] 01–15–1
EXHAUST SYSTEM REMOVAL/INSTALLATION [KL] 01–15–2
EXTERIOR LIGHTING SYSTEM SYMPTOM TROUBLESHOOTING 09–01J–1
EXTRACTOR CHAMBER REMOVAL/INSTALLATION 09–16–1

F

FAN SWITCH INSPECTION 07–40–13
FAN SWITCH REMOVAL/INSTALLATION 07–40–15
FILAMENT INSPECTION 09–12–15
FILAMENT REPAIR 09–12–15
FLASHER UNIT INSPECTION 09–18–10
FLASHER UNIT REMOVAL/INSTALLATION 09–18–9
FLOOR COVERING REMOVAL/INSTALLATION 09–17–15
FLUID LEVEL SENSOR INSPECTION 04–11–8
FLYWHEEL INSPECTION 05–10–11
FOREWARD [GF4A-EL] 05–01B–1
FOREWORD 01–01A–2
FOREWORD 01–01B–1
FOREWORD 01–01C–1
FOREWORD 04–01–1

FOREWORD 07–01–1
FOREWORD 08–01A–1
FOREWORD 08–01B–1
FOREWORD 09–01A–1
FOREWORD 09–01B–1
FOREWORD 09–01C–1
FOREWORD 09–01D–1
FOREWORD 09–01E–1
FOREWORD 09–01G–1
FOREWORD 09–01H–1
FOREWORD 09–01J–1
FOREWORD 09–01K–1
FOREWORD 09–01L–1
FOREWORD 09–01M–1
FOREWORD 09–01N–1
FOREWORD 09–01P–1
FOREWORD [LA4A-EL] 05–01A–1
FRONT ABS WHEEL-SPEED SENSOR INSPECTION 04–13–6
FRONT ABS WHEEL-SPEED SENSOR REMOVAL/INSTALLATION 04–13–6
FRONT ANTENNA FEEDER INSPECTION 09–20–2
FRONT ANTENNA FEEDER REMOVAL/INSTALLATION 09–20–3
FRONT BELTLINE MOLDING REMOVAL/INSTALLATION 09–16–5
FRONT BRAKE (DISC) INSPECTION ... 04–11–12
FRONT BRAKE (DISC) REMOVAL/INSTALLATION 04–11–13
FRONT BUCKLE REMOVAL/INSTALLATION 08–11–3
FRONT BUMPER REMOVAL/INSTALLATION 09–10–4
FRONT CALIPER DISASSEMBLY/ASSEMBLY 04–11–14
FRONT COMBINATION LIGHT REMOVAL/INSTALLATION 09–18–3
FRONT CONSOLE REMOVAL/INSTALLATION 09–17–5
FRONT DISC PAD REPLACEMENT 04–11–14
FRONT DOOR ADJUSTMENT 09–11–1
FRONT DOOR GLASS AND GUIDE REMOVAL/INSTALLATION 09–12–1
FRONT DOOR LOCK ACTUATOR INSPECTION 09–14–2
FRONT DOOR LOCK AND OPENER REMOVAL/INSTALLATION 09–14–2
FRONT DOOR LOCK STRIKER ADJUSTMENT 09–14–3
FRONT DOOR LOCK STRIKER REMOVAL/INSTALLATION 09–14–3
FRONT DOOR LOWER WEATHERSTRIP REMOVAL/INSTALLATION 09–11–3
FRONT DOOR REMOVAL/INSTALLATION 09–11–1
FRONT DOOR TRIM DISASSEMBLY/ASSEMBLY 09–17–9
FRONT DOOR TRIM REMOVAL/INSTALLATION 09–17–9
FRONT DOOR WEATHERSTRIP REMOVAL/INSTALLATION 09–11–2
FRONT DRAIN HOSE INSTALLATION ... 09–15–4
FRONT DRAIN HOSE REMOVAL 09–15–4
FRONT FENDER PANEL REMOVAL/INSTALLATION 09–10–6
FRONT FLAP REMOVAL/INSTALLATION . 09–16–2
FRONT LOWER ARM INSPECTION 02–13–5
FRONT LOWER ARM REMOVAL/INSTALLATION 02–13–4
FRONT MANUAL WINDOW REGULATOR REMOVAL/INSTALLATION 09–12–3
FRONT OIL SEAL REPLACEMENT [FS] 01–10A–12
FRONT OIL SEAL REPLACEMENT [KL] 01–10B–15
FRONT POWER WINDOW REGULATOR INSPECTION 09–12–2
FRONT POWER WINDOW REGULATOR REMOVAL/INSTALLATION 09–12–2
FRONT SCUFF PLATE REMOVAL/INSTALLATION 09–17–12
FRONT SEAT BELT REMOVAL/INSTALLATION 08–11–1
FRONT SEAT DISASSEMBLY/ASSEMBLY 09–13–2
FRONT SEAT REMOVAL/INSTALLATION . 09–13–1
FRONT SHOCK ABSORBER AND COIL SPRING REMOVAL/INSTALLATION 02–13–1
FRONT SHOCK ABSORBER DISPOSAL . 02–13–3
FRONT SHOCK ABSORBER INSPECTION 02–13–3
FRONT SIDE TRIM REMOVAL/INSTALLATION 09–17–13
FRONT STABILIZER REMOVAL/INSTALLATION 02–13–6
FRONT TILT MOTOR INSPECTION 09–13–6
FRONT WHEEL ALIGNMENT 02–11–1
FUEL FILTER (HIGH-PRESSURE SIDE) REMOVAL/INSTALLATION 01–14–9
FUEL GAUGE SENDER UNIT INSPECTION 09–22–6
FUEL INJECTOR INSPECTION 01–14–11
FUEL INJECTOR REMOVAL/INSTALLATION [FS] 01–14–9
FUEL INJECTOR REMOVAL/INSTALLATION [KL] 01–14–10
FUEL PUMP INSPECTION 01–14–7
FUEL PUMP RELAY INSPECTION 01–14–17
FUEL PUMP REMOVAL/INSTALLATION .. 01–14–7
FUEL SHUT-OFF VALVE INSPECTION ... 01–14–6
FUEL TANK INSPECTION 01–14–5
FUEL TANK PRESSURE SENSOR INSPECTION [FS] 01–40A–24
FUEL TANK PRESSURE SENSOR INSPECTION [KL] 01–40B–26
FUEL TANK REMOVAL/INSTALLATION .. 01–14–3
FUEL-FILLER LID ADJUSTMENT 09–10–1
FUEL-FILLER LID REMOVAL/INSTALLATION 09–10–1
FUNDAMENTAL PROCEDURES 00–00–10
FUSE SERVICE CAUTION 09–21–1

G

GENERAL PROCEDURES (CLUTCH) 05–10–1
GENERATOR INSPECTION 01–17–4
GENERATOR REMOVAL/INSTALLATION . 01–17–3
GLASS PANEL ADJUSTMENT 09–15–6
GLASS PANEL REMOVAL/INSTALLATION 09–15–5
GLOVE COMPARTMENT REMOVAL/INSTALLATION 09–17–6

H

HAZARD WARNING SWITCH INSPECTION 09–18–8
HAZARD WARNING SWITCH REMOVAL/INSTALLATION 09–18–7
HEADLIGHT ADJUSTMENT 09–18–1
HEADLIGHT BULB REMOVAL/INSTALLATION 09–18–2
HEADLIGHT HIGH RELAY INSPECTION . 09–18–8
HEADLIGHT HIGH RELAY REMOVAL/INSTALLATION 09–18–8
HEADLIGHT RELAY INSPECTION 09–18–9
HEADLIGHT REMOVAL/INSTALLATION .. 09–18–2
HEADLINER REMOVAL/INSTALLATION . 09–17–14
HEATED OXYGEN SENSOR INSPECTION [FS] 01–40A–22
HEATED OXYGEN SENSOR INSPECTION [KL] 01–40B–24
HEATER CONTROL UNIT BULB REMOVAL/INSTALLATION 07–40–16
HEATER CONTROL UNIT INSPECTION . 07–40–14
HEATER CONTROL UNIT REMOVAL/INSTALLATION 07–40–12
HEATER CORE INSPECTION 07–11–7
HEATER UNIT DISASSEMBLY/ASSEMBLY 07–11–6
HEATER UNIT REMOVAL/INSTALLATION 07–11–5
HIGH-MOUNT BRAKE LIGHT BULB REMOVAL/INSTALLATION 09–18–4
HIGH-MOUNT BRAKE LIGHT REMOVAL/INSTALLATION 09–18–4
HIGH-TENSION LEAD REMOVAL/INSTALLATION 01–18–3
HOOD ADJUSTMENT 09–10–2
HOOD LOCK ADJUSTMENT 09–14–9
HOOD LOCK AND OPENER REMOVAL/INSTALLATION 09–14–9
HOOD REMOVAL/INSTALLATION 09–10–2
HOOD SWITCH INSPECTION 09–14–13
HORN RELAY INSPECTION 09–22–8
HORN REMOVAL/INSTALLATION 09–22–8
HOW TO USE THIS MANUAL 00–00–2

I

IDENTIFICATION NUMBER LOCATIONS 00–00–18
IDLE AIR CONTROL (IAC) VALVE INSPECTION [FS] 01–13A–3
IDLE AIR CONTROL (IAC) VALVE INSPECTION [KL] 01–13B–3
IGNITION COIL INSPECTION 01–18–1
IGNITION COIL REMOVAL/INSTALLATION 01–18–1
IGNITION SWITCH INSPECTION 09–21–2
IGNITION SWITCH REMOVAL/INSTALLATION 09–21–1
IMMOBILIZER SYSTEM ON-BOARD DIAGNOSIS 09–01F–1
IMMOBILIZER SYSTEM REPROGRAM PROCEDURE 09–14–17
IMMOBILIZER SYSTEM SERVICE CAUTION 09–14–15
IMMOBILIZER UNIT INSPECTION 09–14–16
IMMOBILIZER UNIT REMOVAL/INSTALLATION 09–14–16
INDICATOR PANEL ADJUSTMENT 05–18–2
INPUT/TURBINE SPEED SENSOR INSPECTION [GF4A-EL] 05–17B–14
INPUT/TURBINE SPEED SENSOR REMOVAL/INSTALLATION [GF4A-EL] . 05–17B–15
INSPECTION OF SST (DEPLOYMENT TOOL) 08–10–10
INSTALLATION OF RADIO SYSTEM 00–00–13
INSTRUMENT CLUSTER DISASSEMBLY/ASSEMBLY 09–22–1
INSTRUMENT CLUSTER INPUT/OUTPUT CHECK MODE 09–22–2
INSTRUMENT CLUSTER INSPECTION .. 09–22–2
INSTRUMENT CLUSTER REMOVAL/INSTALLATION 09–22–1
INSTRUMENTATION/DRIVER INFO. SYMPTOM TROUBLESHOOTING 09–01P–1
INTAKE AIR TEMPERATURE SENSOR INSPECTION [FS] 01–40A–21
INTAKE AIR TEMPERATURE SENSOR INSPECTION [KL] 01–40B–23
INTAKE MANIFOLD COMPONENT DISASSEMBLY/ASSEMBLY [KL] 01–13B–3
INTAKE-AIR SYSTEM REMOVAL/INSTALLATION [FS] 01–13A–2
INTAKE-AIR SYSTEM REMOVAL/INSTALLATION [KL] 01–13B–2
INTERIOR LIGHT INSPECTION 09–18–11
INTERIOR LIGHT REMOVAL/INSTALLATION 09–18–10
INTERIOR LIGHTING SYSTEM SYMPTOM TROUBLESHOOTING 09–01K–1
INTERLOCK CABLE INSPECTION 05–18–1

J

JACKING POSITIONS 00–00–16

K

KEY REMINDER SWITCH INSPECTION . 09–21–2
KEYLESS ENTRY SYSTEM ON-BOARD DIAGNOSIS 09–01E–5
KEYLESS ENTRY SYSTEM PRELIMINARY INSPECTION 09–01E–3
KEYLESS ENTRY SYSTEM PROBLEM CHECK 09–01E–2
KEYLESS UNIT INSPECTION 09–14–11
KEYLESS UNIT REMOVAL/INSTALLATION 09–14–11
KNOCK SENSOR INSPECTION [FS] ... 01–40A–16
KNOCK SENSOR INSPECTION [KL] ... 01–40B–18
KNOCK SENSOR REPLACEMENT [FS] 01–40A–16
KNOCK SENSOR REPLACEMENT [KL] 01–40B–18

L

LATERAL LINK AND TRAILING LINK REMOVAL/INSTALLATION 02–14–4
LICENSE PLATE LIGHT REMOVAL/INSTALLATION 09–18–4
LIGHT SWITCH INSPECTION 09–18–7
LIGHT SWITCH REMOVAL/INSTALLATION 09–18–6

LOWER PANEL REMOVAL/INSTALLATION 09–17–7

M

MAGNETIC CLUTCH ADJUSTMENT 07–40–10
MAGNETIC CLUTCH DISASSEMBLY/ASSEMBLY 07–40–9
MAGNETIC CLUTCH INSPECTION 07–40–10
MAIN FUSE REMOVAL/INSTALLATION .. 09–21–1
MAIN RELAY INSPECTION [FS] 01–40A–30
MAIN RELAY INSPECTION [KL] 01–40B–32
MANUAL ANTENNA INSPECTION 09–20–5
MANUAL ANTENNA REMOVAL/INSTALATION 09–20–5
MANUAL OUTSIDE MIRROR GLASS INSTALLATION 09–12–18
MANUAL OUTSIDE MIRROR GLASS REMOVAL 09–12–18
MANUAL OUTSIDE MIRROR REMOVAL/INSTALLATION 09–12–17
MANUAL TRANSAXLE REMOVAL/INSTALLATION 05–15–3
MASS AIR FLOW SENSOR INSPECTION [FS] 01–40A–15
MASS AIR FLOW SENSOR INSPECTION [KL] 01–40B–16
MASTER CYLINDER DISASSEMBLY/ASSEMBLY 04–11–8
MASTER CYLINDER REMOVAL/INSTALLATION 04–11–6
MECHANICAL SYSTEM TEST [GF4A-EL] 05–17B–2
MECHANICAL SYSTEM TEST [LA4A-EL] 05–17A–2
METER HOOD REMOVAL/INSTALLATION 09–17–7

N

NEUTRAL SWITCH INSPECTION [FS] . 01–40A–27
NEUTRAL SWITCH INSPECTION [KL] . 01–40B–29
NEUTRAL SWITCH REMOVAL/INSTALLATION [FS] 01–40A–28
NEUTRAL SWITCH REMOVAL/INSTALLATION [KL] 01–40B–30
NONRETURN VALVE INSPECTION 01–14–6

O

O/D OFF INDICATOR LIGHT INSPECTION [GF4A-EL] 05–17B–17
O/D OFF INDICATOR LIGHT INSPECTION [LA4A-EL] 05–17A–19
O/D OFF SWITCH INSPECTION [GF4A-EL] 05–17B–10
O/D OFF SWITCH INSPECTION [LA4A-EL] 05–17A–17
O/D OFF SWITCH REMOVAL/INSTALLATION [GF4A-EL] . 05–17B–11
O/D OFF SWITCH REMOVAL/INSTALLATION [LA4A-EL] . 05–17A–17
OIL COOLER REMOVAL/INSTALLATION [GF4A-EL] . 05–17B–28
OIL COOLER REMOVAL/INSTALLATION [LA4A-EL] . 05–17A–33
OIL FILTER REPLACEMENT 01–11–1
OIL PAN REMOVAL/INSTALLATION 01–11–3
OIL PRESSURE INSPECTION 01–11–2
OIL PRESSURE SWITCH INSPECTION .. 09–22–7
OIL PUMP BODY SEAL REMOVAL/INSTALLATION [LA4A-EL] . 05–17A–29
OIL SEAL (DIFFERENTIAL) REPLACEMENT 05–15–2
OIL SEAL REMOVAL/INSTALLATION [GF4A-EL] 05–17B–26
OIL SEALS REMOVAL/INSTALLATION [LA4A-EL] 05–17A–29
ORIFICE TUBE REMOVAL/INSTALLATION 07–11–11

P

PANEL LIGHT CONTROL SWITCH INSPECTION 09–18–15
PANEL LIGHT CONTROL SWITCH REMOVAL/INSTALLATION 09–18–14
PARKING BRAKE ADJUSTMENT 04–12–1
PARKING BRAKE INSPECTION 04–12–1
PARKING BRAKE REMOVAL/INSTALLATION 04–12–2
PASSENGER-SIDE AIR BAG MODULE REMOVAL/INSTALLATION 08–10–3
PCV VALVE INSPECTION 01–16–8
PILOT BEARING INSPECTION 05–10–10
POWER ANTENNA DISASSEMBLY/ASSEMBLY 09–20–7
POWER ANTENNA INSPECTION 09–20–5
POWER ANTENNA REMOVAL/INSTALLATION 09–20–6
POWER BRAKE UNIT INSPECTION 04–11–9
POWER BRAKE UNIT REMOVAL/INSTALLATION 04–11–10
POWER DOOR LOCK SYSTEM SYMPTOM TROUBLESHOOTING 09–01E–8
POWER OUTSIDE MIRROR GLASS INSTALLATION 09–12–18
POWER OUTSIDE MIRROR GLASS REMOVAL 09–12–17
POWER OUTSIDE MIRROR INSPECTION 09–12–16
POWER OUTSIDE MIRROR REMOVAL/INSTALLATION 09–12–17
POWER OUTSIDE MIRROR SWITCH INSPECTION 09–12–19
POWER OUTSIDE MIRROR SWITCH REMOVAL/INSTALLATION 09–12–18
POWER OUTSIDE MIRROR SYMPTOM TROUBLESHOOTING 09–01C–1
POWER SEAT SWITCH INSPECTION ... 09–13–6
POWER SEAT SYMPTOM TROUBLESHOOTING 09–01D–1
POWER STEERING FLUID INSPECTION 06–12–1
POWER STEERING OIL PUMP DISASSEMBLY/ASSEMBLY 06–12–13
POWER STEERING OIL PUMP REMOVAL/INSTALLATION 06–12–11
POWER STEERING PRESSURE SWITCH INSPECTION [FS] 01–40A–26
POWER STEERING PRESSURE SWITCH INSPECTION [KL] 01–40B–28
POWER WINDOW MAIN SWITCH INSPECTION 09–12–6

POWER WINDOW MAIN SWITCH
REMOVAL/INSTALLATION 09–12–5
POWER WINDOW SUBSWITCH
INSPECTION 09–12–8
POWER WINDOW SUBSWITCH
REMOVAL/INSTALLATION 09–12–7
POWER WINDOW SYSTEM SYMPTOM
TROUBLESHOOTING 09–01A–2
POWERTRAIN CONTROL MODULE (PCM)
INSPECTION [FS] 01–40A–3
POWERTRAIN CONTROL MODULE (PCM)
INSPECTION [KL] 01–40B–3
POWERTRAIN CONTROL MODULE (PCM)
REMOVAL/INSTALLATION [FS] 01–40A–3
POWERTRAIN CONTROL MODULE (PCM)
REMOVAL/INSTALLATION [KL] 01–40B–3
POWERTRAIN CONTROL MODULE
INSPECTION [GF4A-EL] 05–17B–18
POWERTRAIN CONTROL MODULE
INSPECTION [LA4A-EL] 05–17A–19
POWERTRAIN CONTROL MODULE
REMOVAL/INSTALLATION [GF4A-EL] . 05–17B–18
POWERTRAIN CONTROL MODULE
REMOVAL/INSTALLATION [LA4A-EL] . 05–17A–19
PRC SOLENOID VALVE INSPECTION .. 01–14–17
PRC SOLENOID VALVE
REMOVAL/INSTALLATION 01–14–17
PRE-DELIVERY INSPECTION 00–00–22
PRECAUTION 04–01–2
PRECAUTION (BRAKES) 04–10–1
PRECAUTION (STEERING) 06–10–1
PRECAUTION (SUSPENSION) 02–10–1
PRESSURE CONTROL VALVE
INSPECTION 01–16–4
PRESSURE REGULATOR INSPECTION 01–14–16
PRESSURE REGULATOR
REMOVAL/INSTALLATION 01–14–16
PRESSURE RELIEF VALVE
INSPECTION 07–40–17
PURGE SOLENOID VALVE INSPECTION 01–16–6

R

RADIATOR CAP INSPECTION 01–12–3
RADIATOR GRILLE INSTALLATION 09–16–1
RADIATOR GRILLE REMOVAL 09–16–1
RADIATOR REMOVAL/INSTALLATION ... 01–12–4
REAR ABS WHEEL-SPEED SENSOR
INSPECTION 04–13–7
REAR ABS WHEEL-SPEED SENSOR
REMOVAL/INSTALLATION 04–13–7
REAR ANTENNA FEEDER INSPECTION . 09–20–4
REAR ANTENNA FEEDER
REMOVAL/INSTALLATION 09–20–4
REAR BELTLINE MOLDING
REMOVAL/INSTALLATION 09–16–5
REAR BRAKE (DISC) ON-VEHICLE
INSPECTION 04–11–15
REAR BRAKE (DISC)
REMOVAL/INSTALLATION 04–11–16
REAR BRAKE (DRUM) INSPECTION ... 04–11–19
REAR BRAKE (DRUM)
REMOVAL/INSTALLATION 04–11–20
REAR BUCKLE REMOVAL/INSTALLATION 08–11–4
REAR BUMPER
REMOVAL/INSTALLATION 09–10–5
REAR CALIPER
DISASSEMBLY/ASSEMBLY 04–11–18
REAR CENTER SEAT BELT
REMOVAL/INSTALLATION 08–11–2
REAR COMBINATION LIGHT
REMOVAL/INSTALLATION 09–18–3
REAR CONSOLE
DISASSEMBLY/ASSEMBLY 09–17–6
REAR CONSOLE
REMOVAL/INSTALLATION 09–17–6
REAR CROSSMEMBER
REMOVAL/INSTALLATION 02–14–5
REAR DISC PAD REPLACEMENT 04–11–17
REAR DOOR ADJUSTMENT 09–11–3
REAR DOOR GLASS AND GUIDE
REMOVAL/INSTALLATION 09–12–2
REAR DOOR LOCK ACTUATOR
INSPECTION 09–14–4
REAR DOOR LOCK AND OPENER
REMOVAL/INSTALLATION 09–14–4
REAR DOOR LOCK STRIKER
ADJUSTMENT 09–14–5
REAR DOOR LOCK STRIKER
REMOVAL/INSTALLATION 09–14–5
REAR DOOR LOWER WEATHERSTRIP
REMOVAL/INSTALLATION 09–11–5
REAR DOOR REMOVAL/INSTALLATION . 09–11–4
REAR DOOR TRIM
REMOVAL/INSTALLATION 09–17–10
REAR DOOR WEATHERSTRIP
REMOVAL/INSTALLATION 09–11–4
REAR DRAIN HOSE INSTALLATION 09–15–5
REAR DRAIN HOSE REMOVAL 09–15–5
REAR DUCT REMOVAL/INSTALLATION .. 07–11–8
REAR FINISHER
REMOVAL/INSTALLATION 09–16–2
REAR HEAT DUCT
REMOVAL/INSTALLATION 07–11–8
REAR MANUAL WINDOW REGULATOR
REMOVAL/INSTALLATION 09–12–4
REAR OIL SEAL REPLACEMENT [FS] . 01–10A–12
REAR OIL SEAL REPLACEMENT [KL] . 01–10B–16
REAR PACKAGE TRIM
REMOVAL/INSTALLATION 09–17–12
REAR POWER WINDOW REGULATOR
INSPECTION 09–12–4
REAR POWER WINDOW REGULATOR
REMOVAL/INSTALLATION 09–12–4
REAR SCUFF PLATE
REMOVAL/INSTALLATION 09–17–13
REAR SEAT BELT
REMOVAL/INSTALLATION 08–11–2
REAR SEAT DISASSEMBLY/ASSEMBLY . 09–13–5
REAR SEAT REMOVAL/INSTALLATION .. 09–13–4
REAR SHOCK ABSORBER AND COIL
SPRING REMOVAL/INSTALLATION 02–14–1
REAR SHOCK ABSORBER DISPOSAL .. 02–14–2
REAR SHOCK ABSORBER INSPECTION 02–14–2
REAR SPEAKER INSPECTION 09–20–2
REAR SPEAKER
REMOVAL/INSTALLATION 09–20–2
REAR STABILIZER
REMOVAL/INSTALLATION 02–14–3
REAR TILT MOTOR INSPECTION 09–13–6

AI

REAR WHEEL ALIGNMENT 02–11–2
REAR WINDOW DEFROSTER RELAY INSPECTION 09–12–16
REAR WINDOW DEFROSTER RELAY REMOVAL/INSTALLATION 09–12–16
REAR WINDOW DEFROSTER SWITCH INSPECTION 09–12–16
REAR WINDOW DEFROSTER SWITCH REMOVAL/INSTALLATION 09–12–15
REAR WINDOW DEFROSTER SYMPTOM TROUBLESHOOTING 09–01B–1
REAR WINDOW GLASS INSTALLATION 09–12–11
REAR WINDOW GLASS REMOVAL 09–12–9
REAR WINDOW MOLDING INSTALLATION 09–16–5
REAR WINDOW MOLDING REMOVAL ... 09–16–5
REARVIEW MIRROR INSTALLATION ... 09–12–19
REARVIEW MIRROR REMOVAL 09–12–19
REFRIGERANT CHARGING 07–10–3
REFRIGERANT LINES REMOVAL/INSTALLATION 07–11–11
REFRIGERANT PRESSURE CHECK 07–10–2
REFRIGERANT PRESSURE SWITCH INSPECTION 07–40–13
REFRIGERANT PRESSURE SWITCH REMOVAL/INSTALLATION 07–40–12
REFRIGERANT SYSTEM GENERAL PROCEDURES 07–10–2
REFRIGERANT SYSTEM PERFORMANCE TEST 07–10–2
REFRIGERANT SYSTEM SERVICE CAUTIONS 07–10–1
REFRIGERANT SYSTEM SERVICE WARNINGS 07–10–1
REGULATOR HANDLE INSTALLATION .. 09–12–9
REGULATOR HANDLE REMOVAL 09–12–8
RESISTOR INSPECTION 07–40–9
RESISTOR REMOVAL/INSTALLATION ... 07–40–8
ROAD TEST [GF4A-EL] 05–17B–4
ROAD TEST [LA4A-EL] 05–17A–5
ROLLOVER VALVE INSPECTION 01–16–6
ROOF MOLDING INSTALLATION 09–16–6
ROOF MOLDING REMOVAL 09–16–6
ROOM FUSE INSTALLATION 09–21–1

S

SAE STANDARDS 00–00–8
SAS UNIT BRACKET REMOVAL/INSTALLATION 08–10–6
SAS UNIT REMOVAL/INSTALLATION 08–10–5
SCHEDULED MAINTENANCE 00–00–23
SEAT BELT ALR INSPECTION 08–11–4
SEAT BELT ELR INSPECTION 08–11–4
SEAT BELT SYMPTOM TROUBLESHOOTING 08–01B–1
SELECTOR LEVER ADJUSTMENT 05–18–2
SELECTOR LEVER AND CABLE REMOVAL/INSTALLATION 05–18–3
SELECTOR LEVER DISASSEMBLY/ASSEMBLY 05–18–6
SELECTOR LEVER INSPECTION 05–18–1
SHIFT MECHANISM REMOVAL/INSTALLATION 05–16–1
SIDE PANEL REMOVAL/INSTALLATION .. 09–17–7
SIDE PROTECTOR No.1, No.2 INSTALLATION 09–16–3
SIDE PROTECTOR No.1, No.2 REMOVAL 09–16–2
SIDE WALL REMOVAL/INSTALLATION ... 09–17–8
SIGNAL LIGHTING SYSTEM SYMPTOM TROUBLESHOOTING 09–01L–1
SLIDE MOTOR INSPECTION 09–13–5
SLIDING SUNROOF SYMPTOM TROUBLESHOOTING 09–01H–1
SOLENOID BODY REMOVAL/INSTALLATION [LA4A-EL] . 05–17A–18
SOLENOID VALVE REMOVAL/INSTALLATION [GF4A-EL] . 05–17B–17
SOLENOID VALVES INSPECTION [GF4A-EL] 05–17B–16
SPARK PLUG INSPECTION [KL] 01–18–3
STABILIZER CONTROL LINK INSPECTION 02–13–6
STABILIZER CONTROL LINK INSPECTION 02–14–3
STARTER INSPECTION 01–19–2
STARTER INTERLOCK SWITCH INSPECTION (MTX) 01–19–2
STARTER REMOVAL/INSTALLATION 01–19–1
STEERING GEAR AND LINKAGE DISASSEMBLY/ASSEMBLY 06–12–9
STEERING GEAR AND LINKAGE INSPECTION 06–12–10
STEERING GEAR AND LINKAGE REMOVAL/INSTALLATION 06–12–7
STEERING LOCK (ATX MODEL) INSPECTION 06–12–6
STEERING SHAFT COMPONENT DISASSEMBLY/ASSEMBLY 06–12–5
STEERING SHAFT INSPECTION 06–12–6
STEERING WHEEL AND COLUMN INSPECTION 06–12–3
STEERING WHEEL AND COLUMN REMOVAL/INSTALLATION 06–12–4
SUNROOF CONTROL MODULE INSPECTION 09–15–8
SUNROOF CONTROL MODULE REMOVAL/INSTALLATION 09–15–9
SUNROOF MOTOR INSPECTION 09–15–6
SUNROOF MOTOR INSTALLATION 09–15–7
SUNROOF MOTOR REMOVAL 09–15–7
SUNROOF SWITCH INSPECTION 09–15–7
SUNROOF SWITCH REMOVAL/INSTALLATION 09–15–7
SUNROOF UNIT ASSEMBLY 09–15–2
SUNROOF UNIT DISASSEMBLY 09–15–2
SUNROOF UNIT REMOVAL/INSTALLATION 09–15–1
SWING LOUVER INSPECTION 07–40–16
SWING LOUVER REMOVAL/INSTALLATION 07–40–16
SYMPTOM TROUBLESHOOTING 07–01–2

T

TCS OFF SWITCH INSPECTION 04–14–2
TCS OFF SWITCH REMOVAL/INSTALLATION 04–14–1

TCS OPERATION INSPECTION 04–14–1
THEFT-DETERRENT (KEYLESS ENTRY SECURITY) SYSTEM SYMPTOM TROUBLESHOOTING 09–01G–1
THERMOSTAT INSPECTION 01–12–6
THERMOSTAT REMOVAL/INSTALLATION 01–12–5
THROTTLE POSITION SENSOR ADJUSTMENT [FS] 01–40A–18
THROTTLE POSITION SENSOR ADJUSTMENT [KL] 01–40B–21
THROTTLE POSITION SENSOR INSPECTION [FS] 01–40A–17
THROTTLE POSITION SENSOR INSPECTION [KL] 01–40B–20
TIMING BELT REMOVAL/INSTALLATION [FS] 01–10A–5
TIMING BELT REMOVAL/INSTALLATION [KL] 01–10B–6
TNS RELAY INSPECTION 09–18–9
TOWING 00–00–17
TRANSAXLE FLUID TEMPERATURE SENSOR INSPECTION [GF4A-EL] ... 05–17B–13
TRANSAXLE FLUID TEMPERATURE SENSOR REMOVAL/INSTALLATION [GF4A-EL] 05–17B–14
TRANSAXLE FLUID TEMPERATURE SENSOR REMOVAL/INSTALLATION [LA4A-EL] 05–17A–19
TRANSAXLE OIL INSPECTION 05–15–1
TRANSAXLE OIL REPLACEMENT 05–15–1
TRANSAXLE RANGE SWITCH ADJUSTMENT [GF4A-EL] 05–17B–13
TRANSAXLE RANGE SWITCH INSPECTION [GF4A-EL] 05–17B–11
TRANSAXLE RANGE SWITCH REMOVAL/INSTALLATION [GF4A-EL] . 05–17B–12
TRANSAXLE RANGE SWITCH REMOVAL/INSTALLATION [LA4A-EL] . 05–17A–16
TRANSMITTER DISASSEMBLY/ASSEMBLY 09–14–10
TRANSMITTER ID CODE CHANGE 09–14–12
TRANSMITTER INSPECTION 09–14–10
TRANSVERSE MEMBER AND FRONT CROSSMEMBER REMOVAL/INSTALLATION 02–13–7
TROUBLESHOOTING INDEX 07–01–1
TROUBLESHOOTING NOTES 04–01–1
TRUNK COMPARTMENT COVERING REMOVAL/INSTALLATION 09–17–14
TRUNK COMPARTMENT LIGHT SWITCH INSPECTION 09–18–13
TRUNK END TRIM REMOVAL/INSTALLATION 09–17–13
TRUNK KEY CYLINDER SWITCH INSPECTION 09–14–13
TRUNK LID ADJUSTMENT 09–10–3
TRUNK LID LOCK ACTUATOR INSPECTION 09–14–14
TRUNK LID LOCK AND OPENER REMOVAL/INSTALLATION 09–14–13
TRUNK LID OPENER SWITCH INSPECTION 09–14–14
TRUNK LID OPENER SWITCH REMOVAL/INSTALLATION 09–14–14
TRUNK LID REMOVAL/INSTALLATION ... 09–10–4
TRUNK LID STRIKER ADJUSTMENT ... 09–14–15
TRUNK LID STRIKER REMOVAL/INSTALLATION 09–14–15
TURBINE SHAFT SPEED SENSOR REMOVAL/INSTALLATION [LA4A-EL] . 05–17A–19
2/4 BAND SERVO REMOVAL/INSTALLATION 05–17A–26

U

UNDER COVER REMOVAL/INSTALLATION 09–17–8
UNITS 00–00–8

V

VACUUM HOSE ROUTING DIAGRAM [FS] 01–13A–1
VACUUM HOSE ROUTING DIAGRAM [KL] 01–13B–1
VACUUM LINE INSPECTION 04–11–3
VALVE CLEARANCE ADJUSTMENT [FS] 01–10A–3
VALVE CLEARANCE ADJUSTMENT [KL] 01–10B–3
VALVE CLEARANCE INSPECTION [FS] . 01–10A–2
VALVE CLEARANCE INSPECTION [KL] . 01–10B–2
VANITY MIRROR ILLUMINATION INSPECTION 09–18–12
VANITY MIRROR ILLUMINATION REMOVAL/INSTALLATION 09–18–12
VARIABLE RESONANCE INDUCTION SYSTEM (VRIS) CHECK VALVE (ONE-WAY) INSPECTION [KL] 01–13B–4
VARIABLE RESONANCE INDUCTION SYSTEM (VRIS) SHUTTER VALVE ACTUATOR No.1 INSPECTION [KL] .. 01–13B–4
VARIABLE RESONANCE INDUCTION SYSTEM (VRIS) SHUTTER VALVE ACTUATOR No.2 INSPECTION [KL] .. 01–13B–4
VARIABLE RESONANCE INDUCTION SYSTEM (VRIS) SOLENOID VALVE No.1 No.2 INSPECTION [KL] 01–13B–5
VEHICLE LIFT (2 SUPPORTS) AND SAFETY STAND (RIGID RACK) POSITION 00–00–17
VEHICLE SPEEDOMETER SENSOR INSPECTION 05–15–2
VEHICLE SPEEDOMETER SENSOR INSPECTION [GF4A-EL] 05–17B–15
VEHICLE SPEEDOMETER SENSOR INSPECTION [LA4A-EL] 05–17A–17
VEHICLE SPEEDOMETER SENSOR REMOVAL/INSTALLATION 05–15–2
VEHICLE SPEEDOMETER SENSOR REMOVAL/INSTALLATION [GF4A-EL] . 05–17B–16
VEHICLE SPEEDOMETER SENSOR REMOVAL/INSTALLATION [LA4A-EL] . 05–17A–18
VENTILATOR GRILLE REMOVAL/INSTALLATION 09–17–8

W

WARNING AND INDICATOR LIGHT BULB REMOVAL/INSTALLATION 09–22–6
WASHER FLUID-LEVEL SENSOR INSPECTION 09–19–5

AI

WASHER FLUID-LEVEL SENSOR
REMOVAL/INSTALLATION 09–19–5
WATER PUMP REMOVAL/INSTALLATION 01–12–6
WATER TEMPERATURE SENDER UNIT
INSPECTION 09–22–7
WATER TEMPERATURE SENDER UNIT
INSTALLATION 09–22–7
WATER TEMPERATURE SENDER UNIT
REMOVAL 09–22–7
WHEEL ALIGNMENT PREINSPECTION .. 02–11–1
WHEEL CYLINDER
DISASSEMBLY/ASSEMBLY 04–11–21
WINDSHIELD INSTALLATION 09–12–13
WINDSHIELD MOLDING INSTALLATION . 09–16–3
WINDSHIELD MOLDING REMOVAL 09–16–3
WINDSHIELD REMOVAL 09–12–12
WINDSHIELD WASHER MOTOR
INSPECTION 09–19–5
WINDSHIELD WASHER MOTOR
REMOVAL/INSTALLATION 09–19–4
WINDSHIELD WASHER NOZZLE
ADJUSTMENT 09–19–7
WINDSHIELD WASHER NOZZLE
INSTALLATION 09–19–7
WINDSHIELD WASHER NOZZLE
REMOVAL 09–19–7
WINDSHIELD WASHER PIPE
REMOVAL/INSTALLATION 09–19–8
WINDSHIELD WASHER TANK
REMOVAL/INSTALLATION 09–19–4
WINDSHIELD WIPER AND WASHER
SWITCH INSPECTION 09–19–6
WINDSHIELD WIPER AND WASHER
SWITCH REMOVAL/INSTALLATION 09–19–6
WINDSHIELD WIPER ARM AND BLADE
ADJUSTMENT 09–19–1
WINDSHIELD WIPER ARM AND BLADE
REMOVAL/INSTALLATION 09–19–1
WINDSHIELD WIPER LINK
REMOVAL/INSTALLATION 09–19–2
WINDSHIELD WIPER MOTOR
INSPECTION 09–19–3
WINDSHIELD WIPER MOTOR
REMOVAL/INSTALLATION 09–19–2
WIPER/WASHER SYSTEMS SYMPTOM
TROUBLESHOOTING 09–01M–1