Mazda 626 MX-6

1988 Workshop Manu

mazda

1988 Mazda 626/MX-6 Workshop Manual

FOREWARD

A thorough familiarization with this manual is important for proper repair and maintenance. It should always be kept in a handy place for quick and easy reference.

The contents of this manual, including drawings and specifications, are the latest available at the time of printing. As modifications affecting repair or maintenance occur, relevant information supplementary to this volume will be made available at Mazda dealers. This manual should be kept up-to-date.

Mazda Motor Corporation reserves the right to alter the specifications and contents of this manual without obligation or advance notice.

All rights reserved. No part of this book may be reproduced or used in any form or by any means, electronic or mechanical -- including photocopying and recording and the use of any kind of information storage and retrieval system -- without permission in writing.

WARRANTY

The manufacturer's warranty on Mazda vehicles and engines can be voilded if improper service or repairs are performed by persons ther than those at an Authorized Mazda Dealer.

Mazda Motor Corportation
HIROSHIMA, JAPAN

APPLICATION:
This manual is applicable to vehicles beginning with the Vehicle Identification Numbers (VIN) shown on the following page.

CONTENTS

Title	Section
General Information	G
Pre-Delivery Inspection and Schedule Maintenance	0
Engine	1
Lubrication System	2
Cooling System	3
Fuel & Emission Control System (Non-Turbo)	4
Engine Electrical System	5
Clutch	6
Manual Transaxle	7A
Automatic Transaxle	7B
Front & Rear Axles	9
Steering System	10
Braking System	11
Wheels & Tires	12
Suspension	13
Body	14
Body Electrical	15
Technical Data	30
Special Tools	40

1993 Mazda Motor Corporation
Printed in the U.S.A. (10/87)

PRE-DELIVERY INSPECTION AND SCHEDULED MAINTENANCE SERVICES

PRE-DELIVERY INSPECTION ..... **0— 2**
PRE-DELIVERY INSPECTION TABLE..... **0— 2**
SCHEDULED MAINTENANCE SERVICES .... **0— 3**
MAINTENANCE TABLE (SCHEDULE 1)..... **0— 3**
MAINTENANCE TABLE (SCHEDULE 2)..... **0— 7**

86U00X-001

PRE-DELIVERY INSPECTION TABLE

EXTERIOR

INSPECT and **ADJUST**, if necessary, the following items to the specifications:
- ☐ Glass, exterior bright metal and paint for damage
- ☐ Wheel lug nuts
  88—118 N·m (9—12 m-kg, 65—87 ft-lb)
- ☐ Tire pressures (Refer to section 12)
- ☐ All weatherstrips for damage or detachment
- ☐ Operation of hood release and lock
- ☐ Operation of fuel lid and trunk lid (Back door) opener
- ☐ Door operation and alignment
- ☐ Headlight aiming

INSTALL following parts:
- ☐ Wheel caps or rings (if equipped)
- ☐ Outside rear view mirror(s)

UNDER HOOD—ENGINE OFF

INSPECT and **ADJUST**, if necessary, the following items to the specifications:
- ☐ Fuel, coolant and hydraulic lines, fittings, connections and components for leaks
- ☐ Engine oil level
- ☐ Power steering fluid level (if equipped)
- ☐ Brake and clutch master cylinder fluid level (if equipped)
- ☐ Windshield washer reservoir fluid level
- ☐ Radiator coolant level and specific gravity

Protection °C (°F)	Specific gravity at 20°C (68°F)
−4 (25)	1.028
−16 (3)	1.054
−26 (−15)	1.066
−40 (−40)	1.078

- ☐ Tightness of water hose clamps (including heater hoses)
- ☐ Tightness of battery terminals
- ☐ Manual transaxle oil level
- ☐ Drive belt tensions (Refer to section 1)
- ☐ Accelerator cable and its linkage for free movement
- ☐ Headlight cleaner fluid level (if equipped)

CLEAN spark plugs

INTERIOR

INSTALL the following parts:
- ☐ Rubber stopper for inside rear view mirror
- ☐ Fuse for accessories

CHECK the operations of the following items:
- ☐ Seat controls (sliding and reclining) and head rest
- ☐ Door locks including childproof door locks (if equipped)
- ☐ Seat belts and warning system
- ☐ Ignition switch and steering lock
- ☐ Inhibitor switch (ATX only)
- ☐ All lights including warning and indicator lights
- ☐ Sound warning system
- ☐ Headlight cleaner (if equipped)
- ☐ Horn, wipers and washers (front and rear, if equipped)
- ☐ Radio and antenna (if equipped)
- ☐ Cigarette lighter and clock
- ☐ Remote control outside rear view mirrors (if equipped)
- ☐ Power windows (if equipped)
- ☐ Heater, defroster and air conditioner at various mode selection (if equipped)
- ☐ Sunroof (if equipped)

ADJUST antenna trimmer on radio (if equipped)

CHECK the following items:
- ☐ Presence of spare fuse
- ☐ Upholstery and interior finish

CHECK and **ADJUST**, if necessary, the following items:
- ☐ Operation and fit of windows
- ☐ Pedal height and free play of brake and clutch pedal

	Pedal height mm (in)	free play mm (in)
Clutch pedal	216.5—217 (8.52—8.54)	5—13 (0.2—0.51)
Brake pedal	222—227 (8.74—8.94)	4—7 (0.16—0.28)

- ☐ Parking brake
  5—7 noches/98 N (10 kg, 22lb)

UNDER HOOD—ENGINE RUNNING AT OPERATING TEMPERATURE

CHECK the following items:
- ☐ Automatic transaxle fluid level
- ☐ Initial ignition timing
  Non-turbo 6° ± 1° BTDC
  Turbo 9° ± 1° BTDC (with test connector grounded)

ON HOIST

CHECK the following items:
- ☐ Underside fuel, coolant and hydraulic lines, fittings, connections and components for leaks
- ☐ Tires for cuts or bruises
- ☐ Steering linkage, suspension, exhaust system and all underside hardware for looseness or damage

REMOVE protective cover from brake discs

ROAD TEST

CHECK the following items:
- ☐ Brake operation
- ☐ Clutch operation
- ☐ Steering control
- ☐ Operation of meters and gauge
- ☐ Squeaks, rattles or unusual noise
- ☐ Engine general performance (including turbo)
- ☐ Emergency locking retractors
- ☐ Cruise control system (if equipped)

AFTER ROAD TEST

REMOVE seat and floor mat protective covers

CHECK for necessary owner information materials, tools and spare tire in vehicle

86U00X-002

SCHEDULED MAINTENANCE SERVICES

MAINTENANCE TABLE (SCHEDULE 1)

Follow the schedule 1 (Normal Driving Condition) if you mainly operate your vehicle where none of the following conditions apply.
Follow the schedule 2 (Unique Driving Condition) if one or more of the items below apply;

- Repeated short distance driving.
- Driving in dusty condition.
- Driving a with extended use of brakes.
- Driving in areas using road salt or other corrosive materials.
- Driving on rough and/or muddy roads.
- Extended periods of idling and/or low speed operation.
- Driving for a prolonged period in cold temperature and/or extremely humid climates.

SCHEDULED 1 (NORMAL DRIVING CONDITION)
Chart symbols:
I : Inspect, and if necessary correct, clean or replace
R: Replace or change
T: Tighten
L: Lubricate

Remarks:
After 60 months or 60,000 miles (96,000km), continue to follow the described maintenance items and intervals periodically.
As for * marked items in this maintenance chart, please pay attention to the following points.

*1 Replacement of the timing belt is required at every 60,000 miles (96,000km). Failure to replace the timing belt may result in damage to the engine.
*2 This maintenance operation is recommended by Mazda. However, this maintenance is not necessary for emission warranty coverage or manufacturer recall liability.

MAINTENANCE TABLE (SCHEDULE 1)

Interval / Procedure & item		Number of months or km (miles) whichever comes first								Service data and inspection point	Page
	Months	7.5	15	22.5	30	37.5	45	52.5	60		
	Miles	7,500	15,000	22,500	30,000	37,500	45,000	52,500	60,000		
	Kilometers	12,000	24,000	36,000	48,000	60,000	72,000	84,000	96,000		
Steering operations and linkage					I				I	• Free play: 0—30 mm (0—1.18 in) • Operation and looseness • Fluid leakage or oozing	10—10
Air cleaner element					R				R	—	4A—33 4B—40
Spark plugs					R				R	• Plug gap: 1.0—1.1 mm (0.039—0.043 in) • Recommended spark plugs NGK: ZFR5A-11, ZFR6A-11, ZFR7A-11 Nippon Denso: QJ16CR11, QJ20CR11, QJ22CR11	5—32
Cooling system			I		I		I		I	• Hoses for cracks or wear • Coolant level	3—4
Engine coolant					R				R	—	3—4
Drive belts					I				I	• Cracks or damage • Tension	1—6
Fuel filter									R	—	4A—62 4B—78
Fuel lines					I*2				I	• Fittings, connections and components for leaks	4A—43 4B—57
Brake lines, hoses and connection			I		I		I		I	• Proper attachment and connections	11—7
Engine timing belt*1		Replace every 60,000 miles (96,000 km)								—	1—10
Engine oil	Non-turbo	R	R	R	R	R	R	R	R	• Oil pan capacity: 3.9 liters (4.1 US qt, 3.4 Imp qt)	2—4
	Turbo	Replace every 5,000 miles (8,000 km) or 5 months									
Oil filter	Non-turbo	R	R	R	R	R	R	R	R	• Oil filter capacity: 0.3 liters (0.32 US qt, 0.26 Imp qt)	2—5
	Turbo	Replace every 5,000 miles (8,000 km) or 5 months									
Brake fluid					R				R	—	11—8
Drum brakes					I				I	• Min. lining thickness: 1.0 mm (0.04 in) • Max. drum inner dia.: 230.1 mm (9.00 in)	11—49
Disc brakes			I		I		I		I	• Min. pad thickness: Front 2.0 mm (0.08 in), Rear 1.0 mm (0.04 in) • Min. disc thickness: Front 22.0 mm (0.87 in), Rear 8.0 mm (0.31 in) • Disc run out: 0.1 mm (0.004 in)	11—34 11—43

MAINTENANCE TABLE (SCHEDULE 1)

Interval / Procedure & item		Number of months or km (miles) whichever comes first								Service data and inspection point	Page
	Months	7.5	15	22.5	30	37.5	45	52.5	60		
	Miles	7,500	15,000	22,500	30,000	37,500	45,000	52,500	60,000		
	Kilometers	12,000	24,000	36,000	48,000	60,000	72,000	84,000	96,000		
Front suspension ball joints					I				I	• Damage, looseness and grease leakage	13—17
Drive shaft dust boots					I				I	• For cracks, damage, leakage of grease or looseness of band	9—32 9—36
Rear suspension ball joints (4-wheel steering vehicle only)					I				I	• Damage, looseness and grease leakage	13—33
4-wheel steering system operation and linkage					I				I	• Operation and looseness • Fluid leakage or oozing	10—10 10—13
Steering angle of rear wheels (4-wheel steering vehicle only)					I				I	• Steering wheel angle: Inner 5° 00' ± 45' Outer 5° 00' ± 45'	13—50
Solenoid valve oil filter for 4-wheel steering system					R				R	—	10—38
Exhaust system heat shield					I				I	• Clearance to body, and exhaust system	4A—81
Bolts and nuts on chassis and body			T				T			—	—
Air conditione system (if equipped)	Refrigerant	Inspect the refrigerant amount annually								—	—
	Compressor	Inspect the operation annually								—	—

SCHEDULE 2 (UNIQUE DRIVING CONDITION)

Chart symbols:

I : Inspect, and if necessary correct, clean or replace
R: Replace or change
T: Tighten
L: Lubricate

Remarks:

After 60 months or 60,000 miles (96,000km), continue to follow the described maintenance items and intervals periodically.
As for * marked items in this maintenance chart please pay attention to the following points.

*1 Replacement of the timing belt is required at every 60,000 miles (96,000km). Failure to replace the timing belt may result in damage to the engine.
*2 This maintenance operation is recommended by Mazda. However, this maintenance is not necessary for emission warranty coverage or manufacturer recall liability.
*3 This maintenance operation is required for Canada and all states except California. However we do recommend that this operation be performed on California vehicles as well.

MAINTENANCE TABLE (SCHEDULE 2)

Interval / Procedure & item		Number of months or km (miles) whichever comes first												Service data and inspection point	Page
	Months	5	10	15	20	25	30	35	40	45	50	55	60		
	Miles (x1,000)	5	10	15	20	25	30	35	40	45	50	55	60		
	Kilometers (x1,000)	8	16	24	32	40	48	56	64	72	80	88	96		
Steering operations and linkage							I						I	• Free play: 0—30 mm (0—1.18 in) • Operation and looseness • Fluid leakage or oozing	10—10
Air cleaner element				I*3			R			I*3			R	—	4A—33 4B—40
Spark plug							R						R	• Plug gap: 1.0—1.1 mm (0.039—0.043 in) • Recommended spark plugs NGK: ZFR5A-11, ZFR6A-11, ZFR7A-11 Nippon Denso: QJ16CR11, QJ20CR11, QJ22CR11	5—32
Cooling system				I			I			I			I	• Hoses for cracks or wear • Coolant level	3—4
Engine coolant							R						R	—	3—4
Drive belts							I						I	• Cracks or damage • Tension	1—6
Fuel filter													R	—	4A—62 4B—78
Fuel lines							I*2						I	• Fitting, connections and components for leaks	4A—43 4B—57
Brake lines, hoses and connections				I			I			I			I	• Proper attachment and connections	11—7
Engine timing belt*1		Replace every 60,000 miles (96,000km)												—	1—10
Engine oil	Non-turbo	R	R	R	R	R	R	R	R	R	R	R	R	• Oil pan capacity: 3.9 liters (4.1 US qt, 3.4 Imp qt)	2—4
	Turbo	Replace every 3,000 miles (5,000km) or 3 months													
Oil filter	Non-turbo	R	R	R	R	R	R	R	R	R	R	R	R	• Oil filter capacity: 0.3 liters (0.32 US qt, 0.26 Imp qt)	2—5
	Turbo	Replace every 3,000 miles (5,000km) or 3 months													
Brake fluid				R			R			R			R	—	11—8
Anti-lock brake system brake fluid							R						R	—	11—83
Drum brakes							I						I	• Min. lining thickness: 1.0 mm (0.04 in) • Max. drum inner dia.: 230.1 mm (9.00 in)	11—49
Disc brakes				I			I			I			I	• Min. pad thickness: Front 2.0 (0.08 in) Rear 1.0 mm (0.04 in) • Min. disc thickness: Front 22.0 mm (0.87 in) Rear 8.0 mm (0.31 in) • Disc run out: 0.1 mm (0.004 in)	11—34 11—43

MAINTENANCE TABLE (SCHEDULE 2)

Interval / Procedure & item	Number of months or km (miles) whichever comes first													Service data and inspection point	Page
	Months	5	10	15	20	25	30	35	40	45	50	55	60		
	Miles (x1,000)	5	10	15	20	25	30	35	40	45	50	55	60		
	Kilometers (x1,000)	8	16	24	32	40	48	56	64	72	80	88	96		
Front suspension ball joints							I						I	• Damage, looseness and grease leakage	13—17
Drive shaft dust boots							I						I	• For cracks, damage, leakage of grease or looseness of band	9—32 9—36
Rear suspension ball joints (4-wheel steering vehicle only)							I						I	• Damage, looseness and grease leakage	13—33
4-wheel steering system operation and linkage							I						I	• Operation and looseness • Fluid leakage or oozing	10—10 10—13
Steering angle of rear wheels (4-wheel steering vehicle only)							I						I	• Steering wheel angle: Inner 5° 00' ± 45' Outer 5° 00' ± 45'	13—50
Solenoid valve oil filter for 4-wheels steering system							R						R	—	10—38
Exhaust system heat shield							I						I	• Clearance to body, and exhaust system	4A—81
Bolts and nuts on chassis and body				T			T			T			T	—	—
Air conditioner system (if equipped)	Refrigerant	Inspect the refrigerant amount annually												—	—
	Compressor	Inspect the operation annually												—	—

86U00X-008

ENGINE

OUTLINE ..... 1— 2
STRUCTURAL VIEW ..... 1— 2
SPECIFICATIONS ..... 1— 3
TROUBLESHOOTING GUIDE ..... 1— 3
TUNE-UP PROCEDURE ..... 1— 5
ON-VEHICLE INSPECTION ..... 1— 9
COMPRESSION ..... 1— 9
ON-VEHICLE MAINTENANCE ..... 1—10
TIMING BELT ..... 1—10
CYLINDER HEAD ..... 1—16
VALVE SEAL ..... 1—22
REMOVAL ..... 1—28
DISASSEMBLY ..... 1—32
AUXILIARY PARTS ..... 1—32
TIMING BELT ..... 1—34
CYLINDER HEAD ..... 1—36
CYLINDER BLOCK ..... 1—38
INSPECTION AND REPAIR ..... 1—42
ASSEMBLY ..... 1—56
CYLINDER BLOCK ..... 1—56
CYLINDER HEAD ..... 1—67
TIMING BELT ..... 1—72
AUXILIARY PARTS ..... 1—76
INSTALLATION ..... 1—81
TRANSAXLE ASSEMBLY ..... 1—81
ENGINE INSTALLATION ..... 1—82

86U01X-001

OUTLINE

STRUCTURAL VIEW

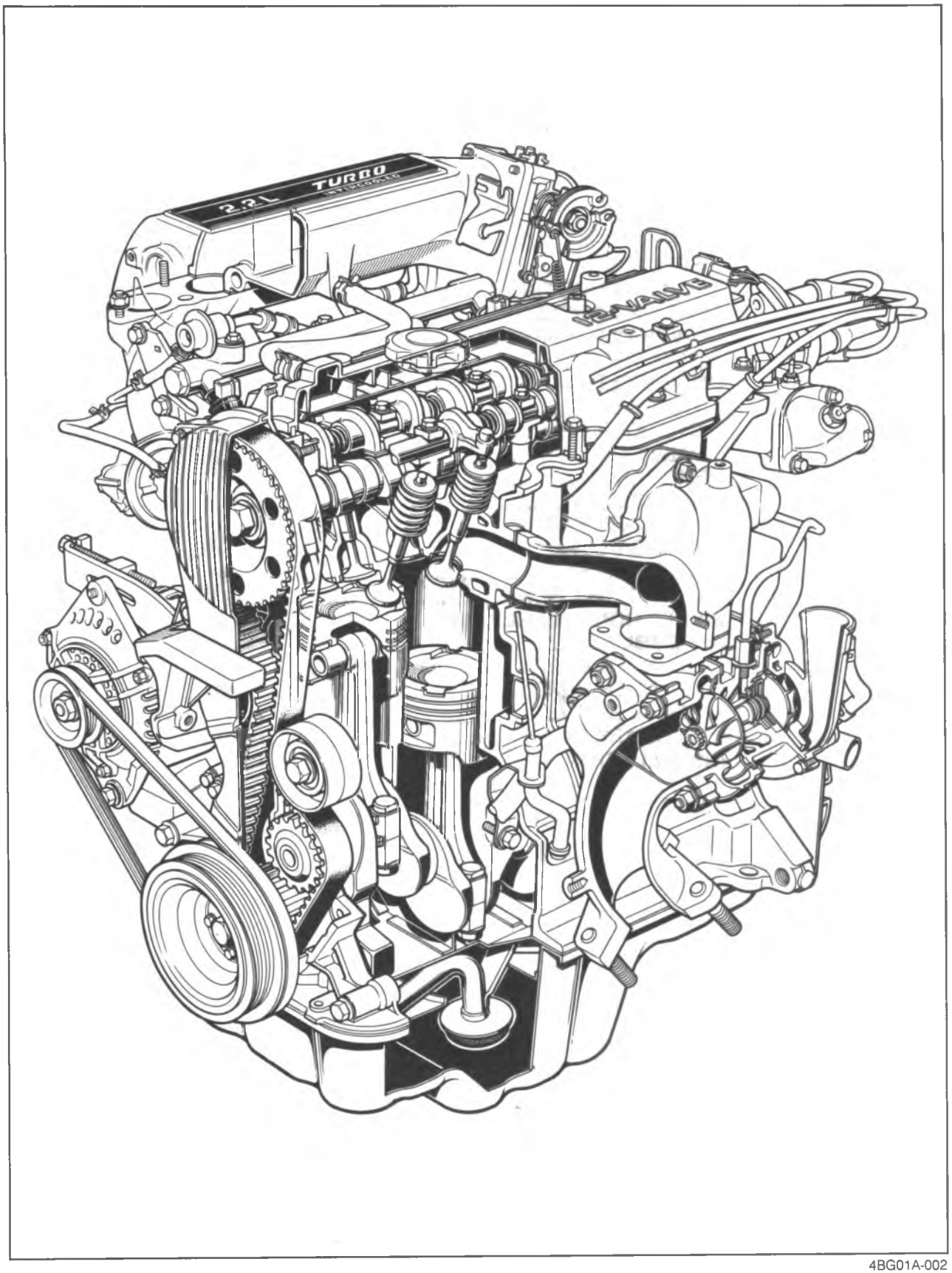

4BG01A-002

SPECIFICATIONS

Engine \ model				F2	
				Turbo	Non-Turbo
Type				Gasoline, 4 cycle	
Cylinder arangement and number				In line, 4 cylinders	
Combustion chamber				Pentroof	
Valve system				OHC, belt driven 12 valves	
Displacement			cc (cu in)	2,184 (133.2)	
Bore and stroke			mm (in)	86.0 x 94.0 (3.39 x 3.70)	
Compression ratio				7.8 : 1	8.6 : 1
Compression pressure kPa (kg/cm², psi)-rpm		Standard		960 (9.8, 139)-260	1,120 (11.4, 162)-270
		Minimum		680 (6.9, 98)-260	780 (8.0, 114)-270
Valve timing	IN	Open	BTDC	10°	
		Close	ABDC	49°	
	EX	Open	BBDC	55°	
		Close	ATDC	12°	
Valve clearance		IN	mm (in)	0: Maintenance-free	
		EX	mm (in)	0: maintenance-free	
Idle speed (MTX in neutral, ATX "P" range)			rpm	750 ± 25	
Ignition timing			BTDC	9° ± 1°	6° ± 1°
Firing order				1—3—4—2	

86U01X-002

TROUBLESHOOTING GUIDE

Problem	Possible Cause	Remedy	Page
Difficult starting	**Malfunction of engine-related components**		
	Burned valve	Replace	1—43
	Worn piston, piston ring, or cylinder	Replace or repair	1—50,51
	Failed cylinder head gasket	Replace	1—16
	Malfunction of fuel system	Refer to Section 4	
	Malfunction of electrical system	Refer to Section 5	
Poor idling	**Malfunction of engine-related components**		
	Malfunction of HLA	Replace	1—69
	Poor valve to valve seat contact	Repair or replace	1—45
	Failed cylinder head gasket	Replace	
	Malfunction of fuel system	Refer to Section 4	
Excessive oil consumption	**Oil working up**		
	Worn piston ring groove or sticking piston ring	Replace	1—51
	Worn piston or cylinder	Replace or repair	1—50,51
	Oil working down		
	Worn valve seal	Replace	1—22
	Worn valve stem or guide	Replace	1—43
	Oil leakage	Refer to Section 2	

86U01X-003

Problem	Possible Cause	Remedy	Page
Insufficient power	**Insufficient compression**		
	Malfunction of HLA	Replace	1—69
	Compression leakage from valve seat	Repair	1—45
	Seized valve stem	Replace	1—43
	Weak or broken valve spring	Replace	1—46
	Failed cylinder head gasket	Replace	1—16
	Cracked or distorted cylinder head	Replace	1—42
	Sticking, damaged, or worn piston ring	Replace	1—51
	Cracked or worn piston	Replace	1—51
	Malfunction of fuel system	Refer to Section 4	
	Others		
	Slipping clutch	Refer to Section 6	
	Dragging brakes	Refer to Section 11	
	Wrong size tires	Refer to Section 12	
Abnormal combustion	**Malfunction of engine-related components**		
	Malfunction of HLA	Replace	1—69
	Sticking or burned valve	Replace	1—43
	Weak or broken valve spring	Replace	1—46
	Carbon accumulation in combustion chamber	Eliminate carbon	—
	Malfunction of fuel system	Refer to Section 4	
Engine noise	**Crankshaft or bearing related parts**		
	Excessive main bearing oil clearance	Replace or repair	1—58
	Main bearing seized or heat-damaged	Replace	1—58
	Excessive crankshaft end play	Replace or repair	1—60
	Excessive connecting rod bearing oil clearance	Replace or repair	1—61
	Connecting rod bearing seized or heat-damaged	Replace	1—61
	Piston related parts		
	Worn cylinder	Replace or repair	1—49
	Worn piston or piston pin	Replace	1—51,52
	Seized piston	Replace	1—51
	Damaged piston ring	Replace	1—51
	Bent connecting rod	Replace	1—52
	Valves or timing related parts		
	Malfunction of HLA *	Replace	1—69
	Broken valve spring	Replace	1—46
	Excessive valve guide clearance	Replace	1—43
	Malfunction of timing belt tensioner	Replace	1—55
	Malfunction of cooling system	Refer to Section 3	
	Malfunction of fuel system	Refer to Section 4	
	Others		
	Malfunction of water pump bearing	Replace	—
	Improper drive-belt tension	Adjust	1—6
	Malfunction of alternator bearing	Replace	—
	Exhaust gas leakage	Repair	1—42

* Tappet noise may occur if the engine is not operated for an extended period of time. The noise should stop after the engine has reached normal operating temperature.

86U01X-004

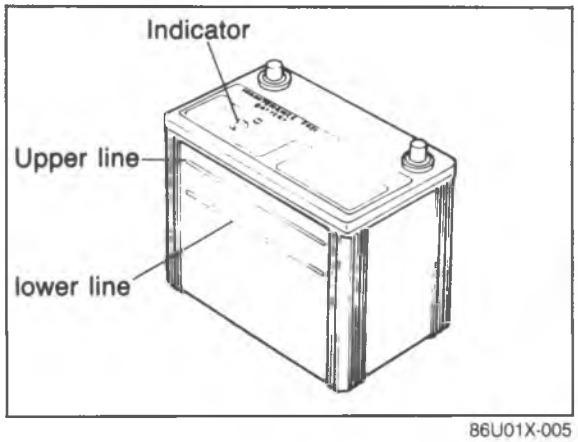

86U01X-005

TUNE-UP PROCEDURE

Tune the engine according to the procedures described below.

Battery

1. Check the indicator sign on the top of the battery. If the indicator sign is blue, the battery is normal.
2. If the blue indicator sign is not visible, the electrolyte level of the battery is low and/or the battery is discharged.
3. Add distilled water and/or recharge according to the procedures described in Section 5.

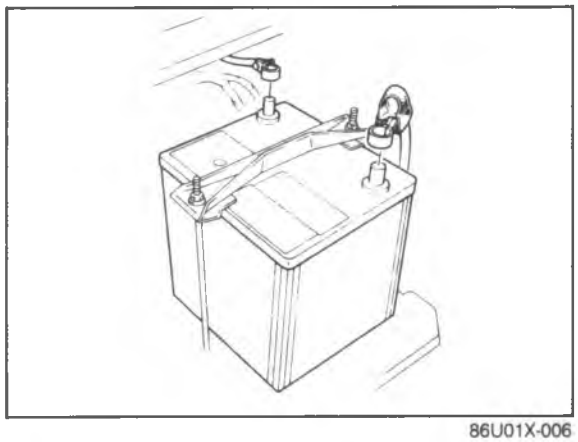
86U01X-006

4. Check the tightness of the terminals to ensure good electrical connections. Clean the terminals and coat them with grease.
5. Inspect for corroded or frayed battery cables.
6. Check the rubber protector on the positive terminal for proper coverage.

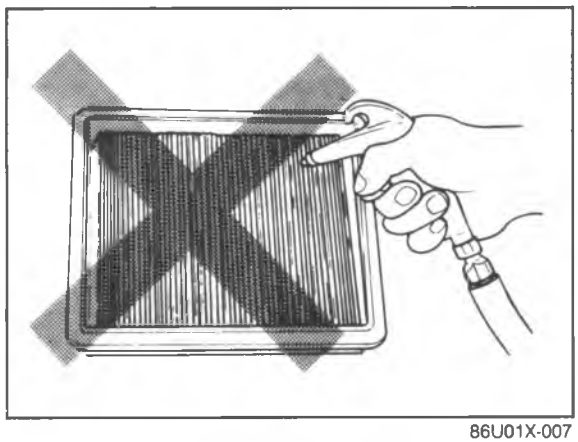
86U01X-007

Air Cleaner Element

Visually check the air cleaner element for excessive dirt, damage or oil. Replace if necessary

Caution

Do not clean the air cleaner element with compressed air, replace if necessary.

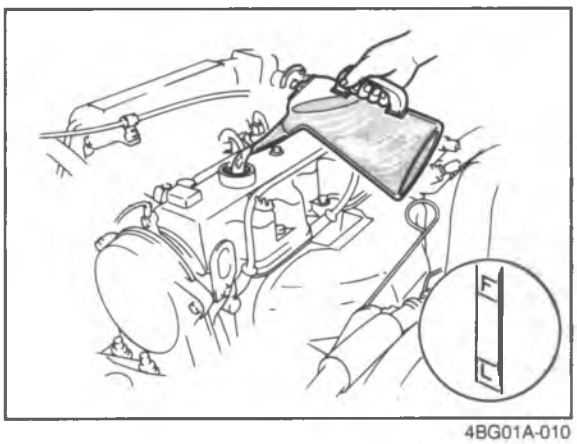
4BG01A-010

Engine Oil

Check the engine oil level and condition with the oil level gauge.

Add oil, or change it, if necessary.

86U01X-008

Coolant Level (Cold engine)

1. Check that the coolant level is near the radiator inlet port.
2. Check that the level in the coolant reservoir is between the FULL and LOW marks.
   Add coolant if necessary.

Warning

a) Never remove the radiator cap while the engine is hot.

b) Wrap a thick cloth around the cap and carefully remove it.

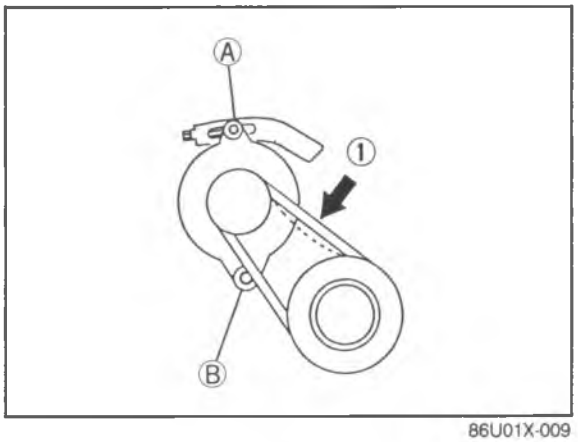

86U01X-009

Drive Belt

1. Check the drive belt for wear, cracks, or fraying. Replace if necessary.
2. Check the drive belt deflection by applying moderate pressure **(98 N, 10 kg, 22 lb)** midway between the pulleys.
   (1) Alternator belt deflection
   New: 6—8 mm (0.24—0.31 in)
   Used: 7—9 mm (0.27—0.35 in)

   If necessary, loosen the alternator bolts and adjust the belt deflection by turning the adjust bolt.

   Tightening torque
   Ⓐ :31—46 N·m
   (3.2—4.7 m-kg, 23—34 ft-lb)
   Ⓑ :37—52 N·m
   (3.8—5.3 m-kg, 27—38 ft-lb)

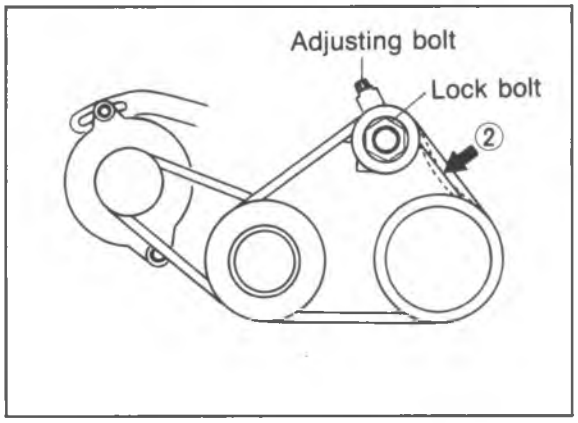

86U01X-010

   (2) P/S oil pump belt deflection
   New: 8—10 mm (0.31—0.39 in)
   Used: 9—11 mm (0.35—0.43 in)

   If necessary, loosen the lock bolt and adjust the belt deflection by turning the adjust bolt.

   Tightening torque of lock bolt:
   37—52 N·m (3.8—5.3 m-kg, 27—38 ft-lb)

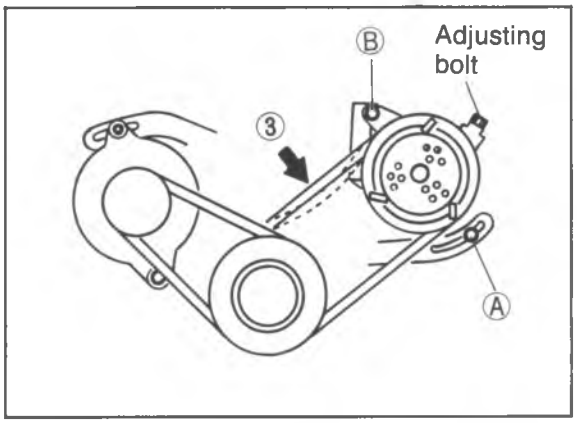

86U01X-011

   (3) A/C compressor belt deflection
   New: 7—9 mm (0.27—0.35 in)
   Used: 8—10 mm (0.31—0.39 in)

   If necessary, loosen the A/C compressor bolts and adjust the belt deflection by turning the adjust bolt.

   Tightening torque
   Ⓐ :37—52 N·m
   (3.8—5.3 m-kg, 27—38 ft-lb)
   Ⓑ :37—52 N·m
   (3.8—5.3 m-kg, 27—38 ft-lb)

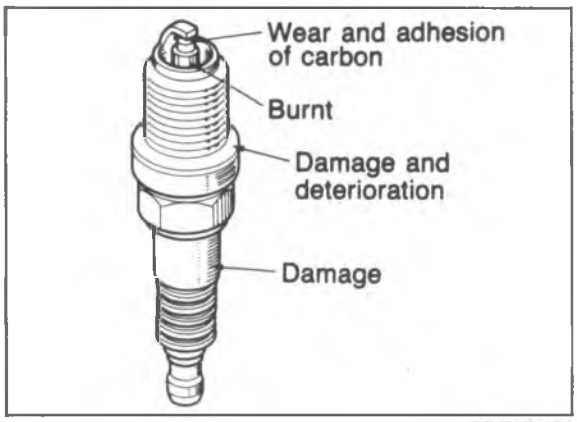

86U01X-012

Spark Plug

Check the following points. Clean or replace if necessary.

1. Damaged insulation
2. Worn electrodes
3. Carbon deposits
4. Damaged gasket
5. Burnt spark insulator
6. Plug gap

Plug gap:
1.0—1.1 mm (0.039—0.043 in)

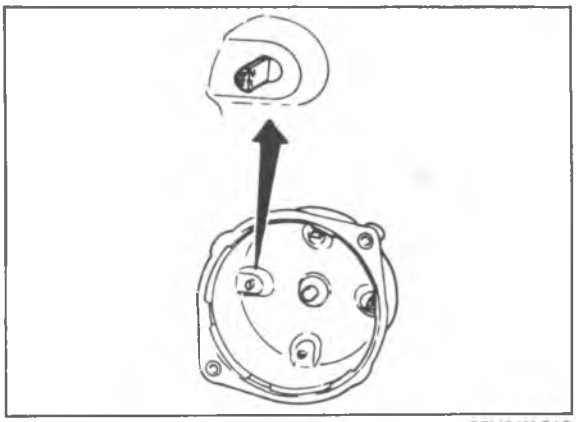

86U01X-013

Distributor Cap

Check the following points. Replace if necessary.

1. Cracks or carbon deposits
2. Burnt or corroded terminals
3. Worn distributor center contact

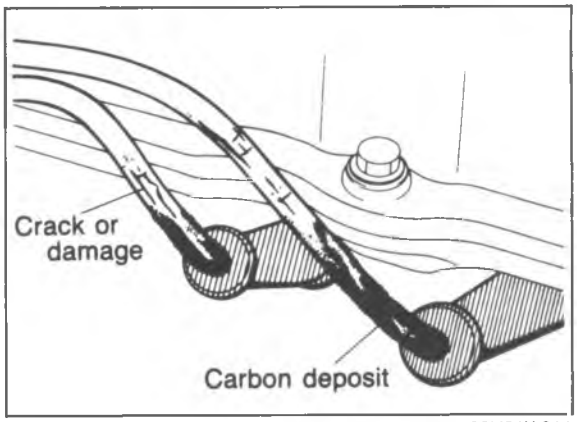

86U01X-014

High-Tension Lead

Check the following points. Clean or replace if necessary.

1. Damaged lead
2. Carbon deposits

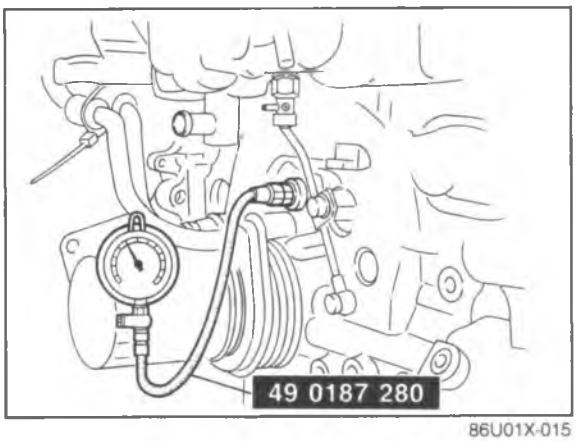

86U01X-015

Hydraulic Lash Adjuster (HLA)

Note
Tappet noise may occur if the engine is not operated for an extended period of time. The noise should stop after the engine has reached normal operating temperature.

1. Check for tappet noise. If noise exists, check the following:
   (1) Engine oil condition and level
   (2) Engine oil pressure (Refer to Section 2)

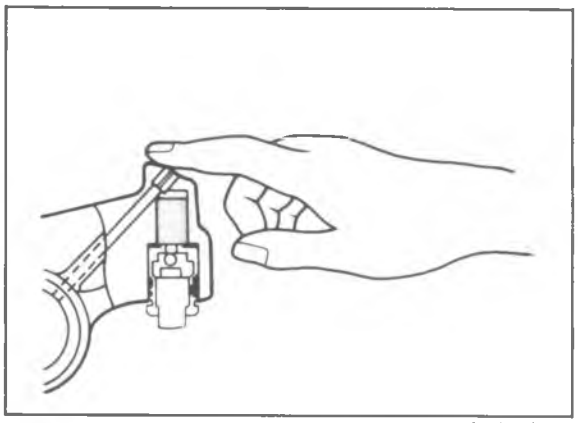

86U01X-016

2. If the noise does not stop, check for movement of each HLA by pushing down each rocker arm by hand while at TDC of compression stroke.
3. If the rocker arm moves down, replace the HLA. (Refer to page 1—69.)

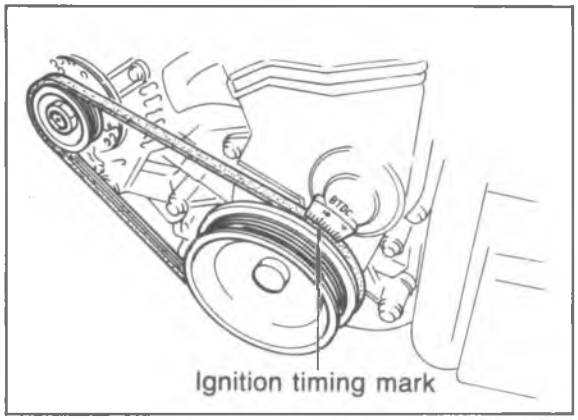

86U01X-017

Ignition Timing

1. Warm up the engine and run it at idle.
2. Turn all electric loads OFF.
3. Ground the test connector to the vehicle with a jumper wire. (Turbo)
4. Connect a timing light tester.
5. Disconnect the vacuum hose from the vacuum control, and plug the hose. (Non-turbo)
6. Check that the ignition timing mark (yellow) on the crankshaft pulley and the timing mark on the timing belt cover are aligned.

Ignition timing
Turbo : 9° ± 1° BTDC
Non-Turbo: 6° ± 1° BTDC

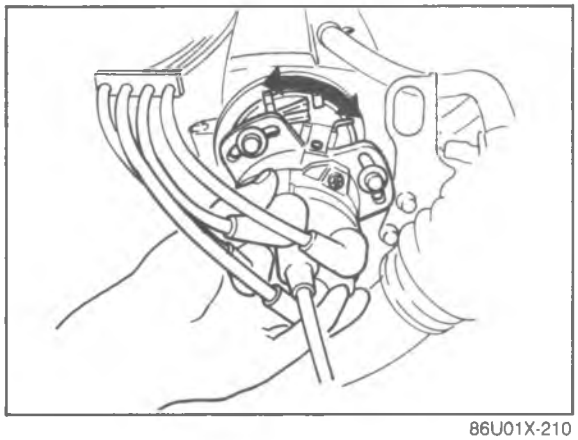

86U01X-210

7. If necessary, adjust the ignition timing by turning the distributor.

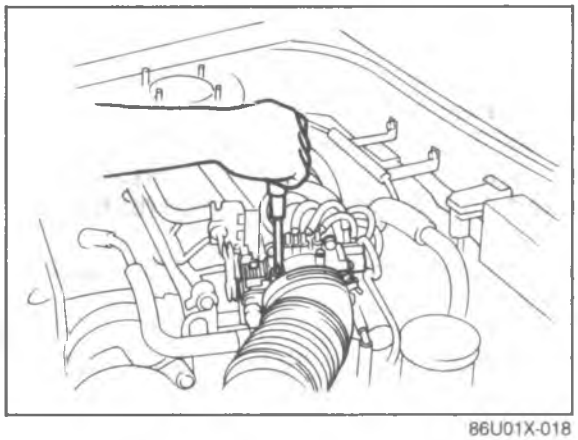

86U01X-018

Idle Speed

1. Ground the test connector to the vehicle with a jumper wire.
2. Connect a tachometer to the engine.
3. Check the idle speed.

Idle speed (MTX in neutral, ATX "P" range)
750 ± 25 rpm

4. If necessary, remove the blind cap from the throttle body and adjust by turning the air-adjust screw.
5. Install the blind cap and disconnect the jumper wire from the test connector.

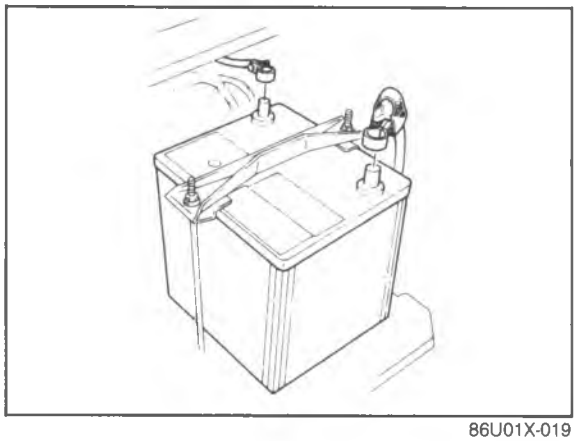

86U01X-019

ON-VEHICLE INSPECTION

If the engine exhibits low power, poor fuel economy, or poor idle, check the following:
1. Ignition system (Refer to Section 5)
2. Compression
3. Fuel system (Refer to Section 4)

COMPRESSION

1. Check that the battery is fully charged. Recharge it if necessary.

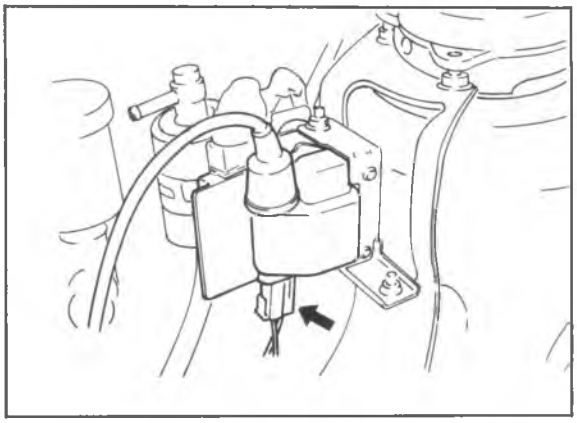

86U01X-020

2. Warm up the engine to the normal operating temperature.
3. Turn it off for about 10 minutes to allow the exhaust manifold to cool.
4. Remove all spark plugs.
5. Disconnect the primary wire connector from the ignition coil.

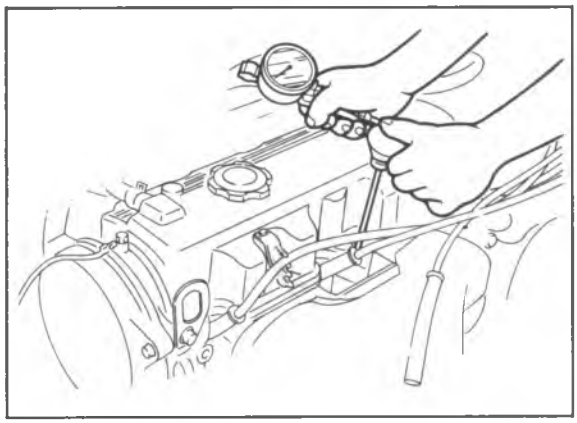

86U01X-021

6. Connect a compression gauge to No. 1 spark plug hole.
7. Fully depress the accelerator pedal and crank the engine.
8. Note the maximum gauge reading.
9. Check each cylinder.

Compression pressure

kPa (kg/cm², psi)-rpm

	Standard	Minimum
Turbo	960 (9.8, 139)—260	680 (6.9, 98)—260
Non-Turbo	1,120 (11.4, 162)—270	780 (8.0, 114)—270

Possible Cause

If compression is low, pour heavy oil into the cylinder and turn the crankshaft several times
Check compression once more

↓

Is compression increased?
- **Yes** → 1. Worn piston or piston rings; 2. Worn cylinder wall
- **No** ↓

Is compression in adjacent cylinder low?
- **Yes** → 1. Defective cylinder head gasket; 2. Distorted cylinder head
- **No** → 1. Improper valve seating; 2. Valve sticking in guide; 3. Defective cylinder head gasket

86U01X-022

ON-VEHICLE MAINTENANCE

TIMING BELT

Removal

1. Disconnect the negative battery cable.
2. Remove in the sequence shown in the figure, for the specially marked parts referring to removal note.

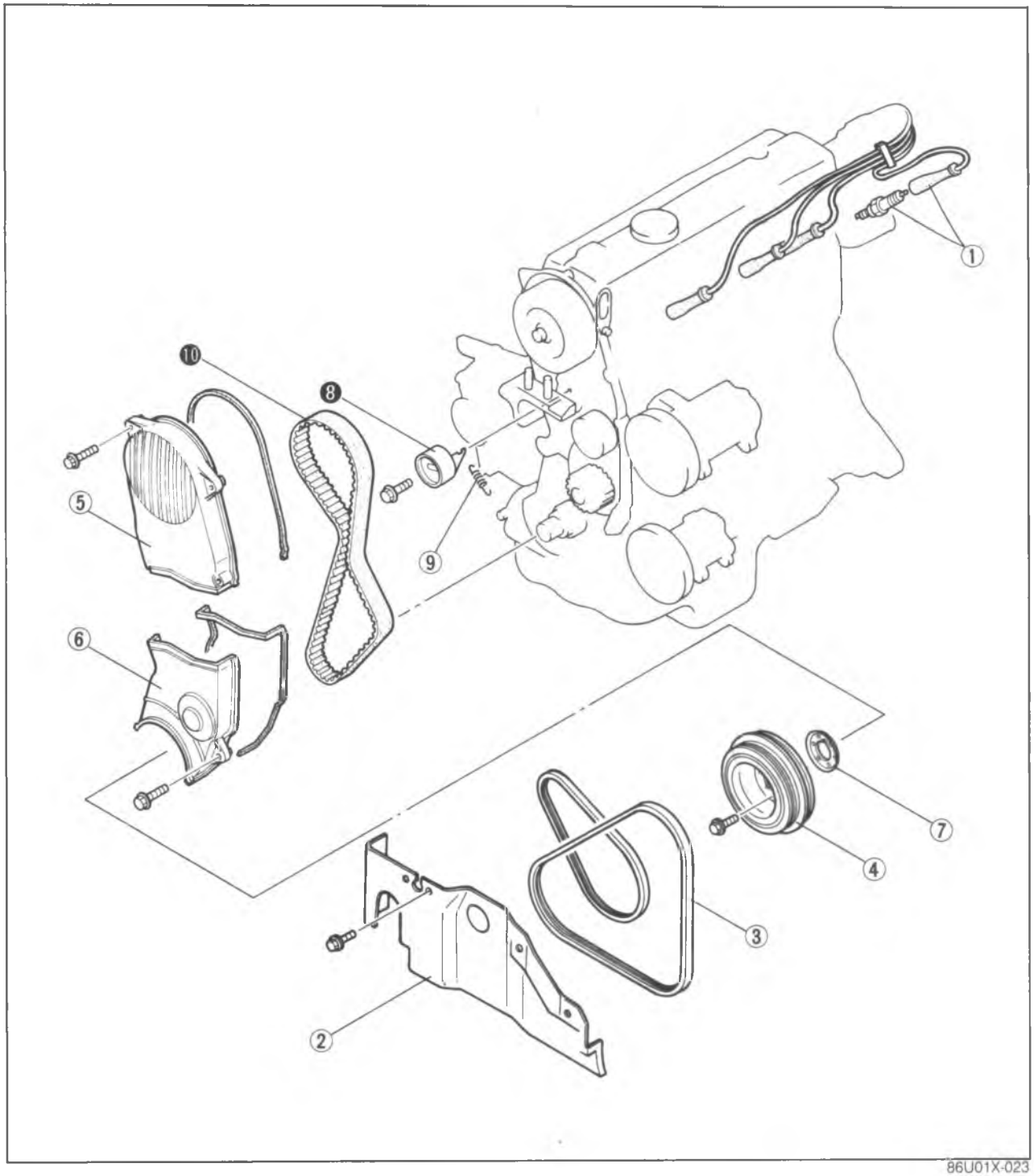

86U01X-023

1. High-tension lead and spark plug
2. Engine side cover
3. Drive belt
4. Crankshaft pulley
5. Upper timing belt cover
6. Lower timing belt cover
7. Baffle plate
8. Timing belt tensioner
9. Timing belt tensioner spring
10. Timing belt

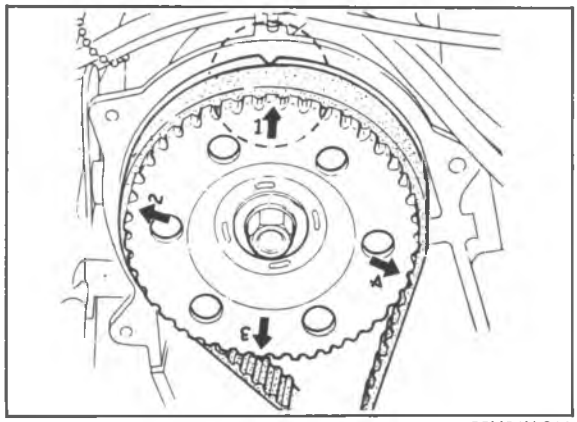

86U01X-211

Removal note
Timing belt tensioner

1. Turn the crankshaft to align the "⬆1" mark of the camshaft pulley with the front housing timing mark.
2. Remove the tensioner.

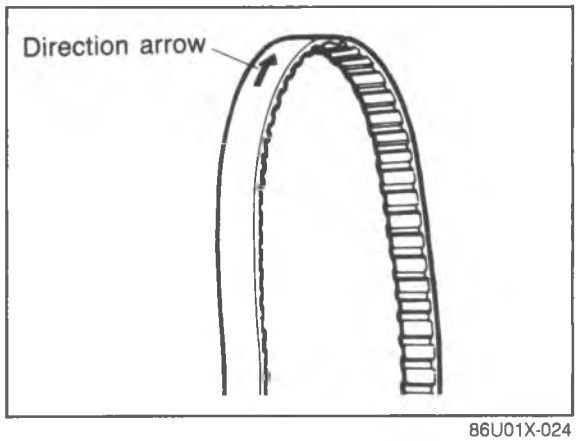

86U01X-024

Timing belt

Mark the timing belt rotation for proper reinstallation if it is reused.

Caution
Be careful not to allow oil, grease, or water on the belt.

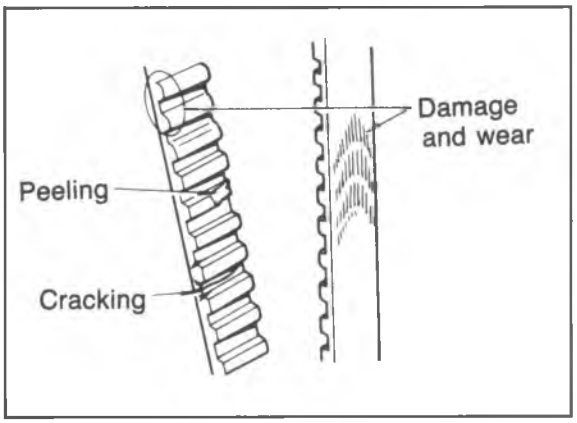

86U01X-025

Inspection and Repair

Inspect the following parts. (Refer to page 1—54, 55).

1. Timing belt
2. Timing belt tensioner and spring
3. Timing belt idler pulley
4. Timing belt pulley
5. Camshaft pulley

Installation

Install in the reverse order of removal, referring to installation note.

Torque Specifications

86U01X-026

7—10 N·m
(70—100 cm-kg, 61—87 in-lb)

37—52 N·m
(3.8—5.3 m-kg, 27—38 ft-lb)

15—23 N·m
(1.5—2.3 m-kg,
11—17 ft-lb)

7—10 N·m
(70—100 cm-kg, 61—87 in-lb)

8—11 N·m
(80—110 cm-kg, 69—95 in-lb)

12—17 N·m
(1.25—1.75 m-kg, 109—152 in-lb)

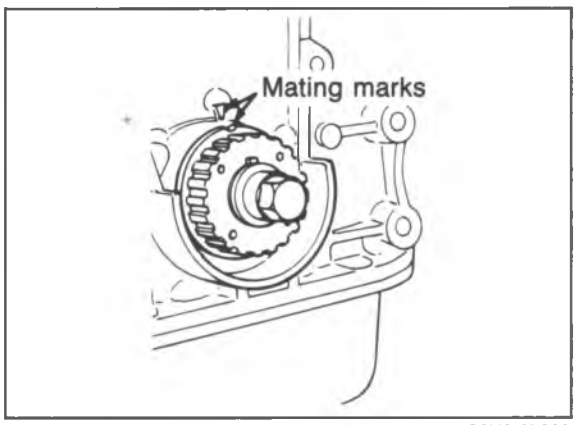

86U01X-220

Installation note

Timing belt

1. Check that the mark on the timing belt pulley is aligned with the mating mark.

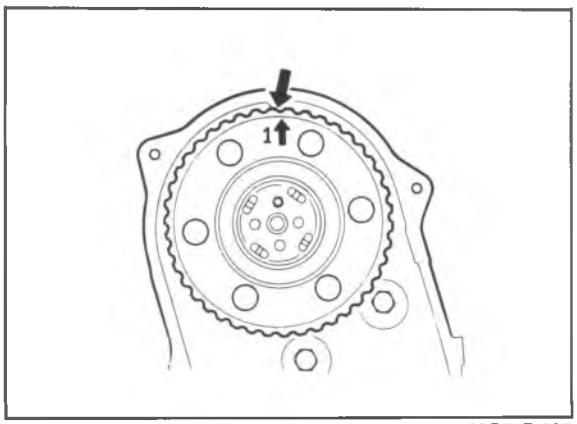

69G01B-025

2. Check that the "↑1" mark of the camshaft pulley is aligned with the timing mark. If it is not aligned, turn the camshaft to align.

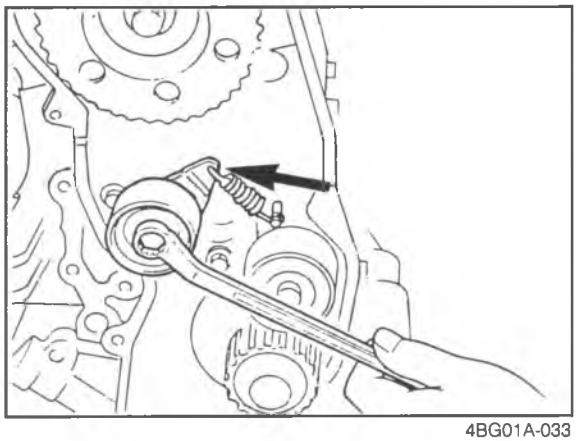

4BG01A-033

3. Install the timing belt tensioner and spring. Temporarily secure it with the spring fully extended.

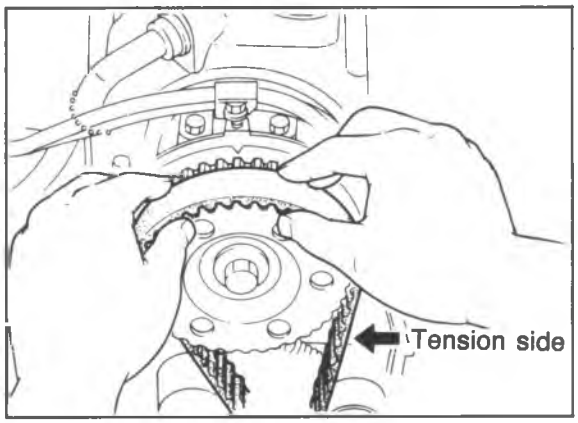

86U01X-027

4. Install the timing belt so that there is no looseness at the water pump pulley and idler pulley side.

Caution
a) If the timing belt is being reused, it must be reinstalled to rotate in the original direction.
b) Check that there is no oil, grease, or dirt on the timing belt.

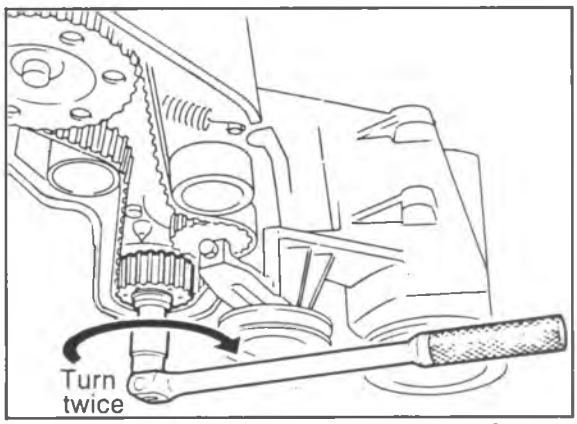

69G01B-027

5. Loosen the tensioner lock bolt.
6. Turn the crankshaft twice in the direction of rotation, and align the mating marks.
7. Check that the timing marks are correctly aligned. If not aligned, remove the timing belt tensioner and timing belt, and repeat steps 1—6.

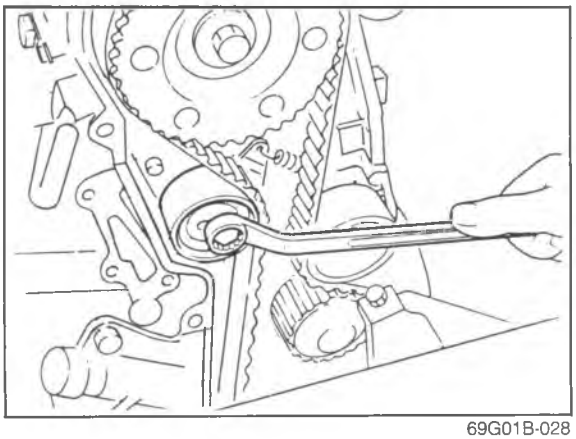

69G01B-028

8. Tighten the timing belt tensioner lock bolt.

Tightening torque:
37—52 N·m (3.8—5.3 m-kg, 27—38 ft-lb)

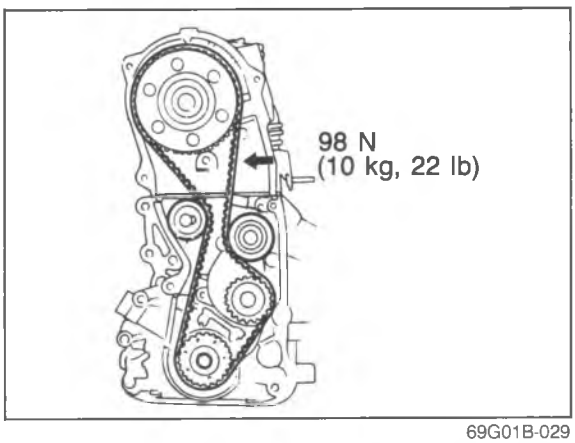

69G01B-029

9. Check the timing belt deflection. If the deflection is not correct, repeat the adjustment from step 5 above.

Timing belt deflection: 7.5—8.5 mm (0.30—0.33 in) /98 N (10 kg, 22 lb)

Caution
Be sure not to apply tension other than that of the tensioner spring.

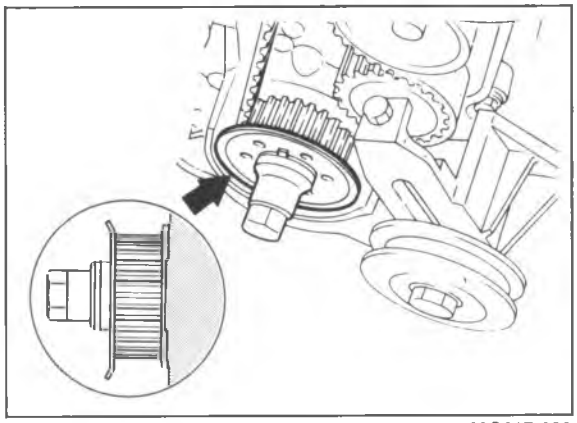

69G01B-030

Baffle plate
Install the baffle plate as shown in the figure.

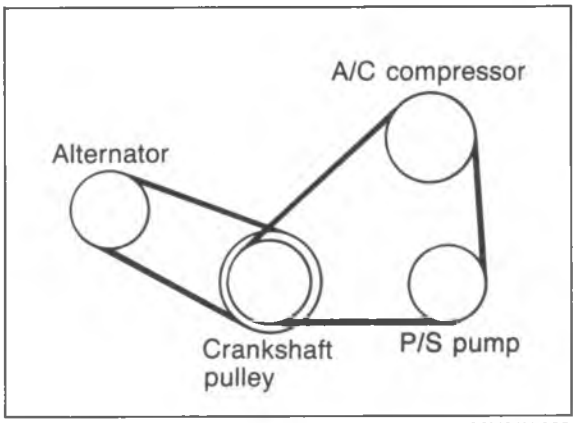

86U01X-028

Drive belt
Install each drive belt, and check the belt deflection. (Refer to page 1—6.)

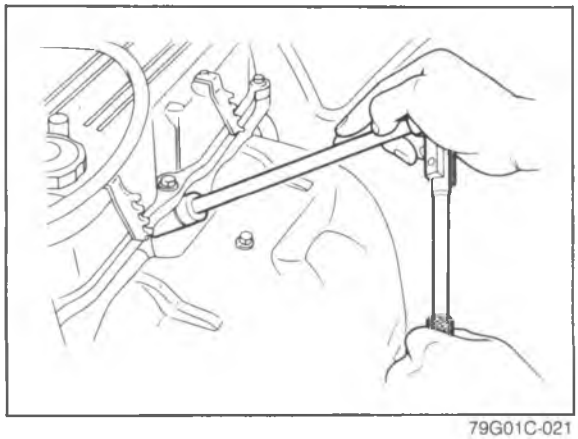

79G01C-021

Spark plug

1. Apply anti-seize compound or molybdenum-based lubricant to the spark plug threads.
2. Install the spark plugs.

Tightening torque:
15—23 N·m (1.5—2.3 m-kg, 11—17 ft-lb)

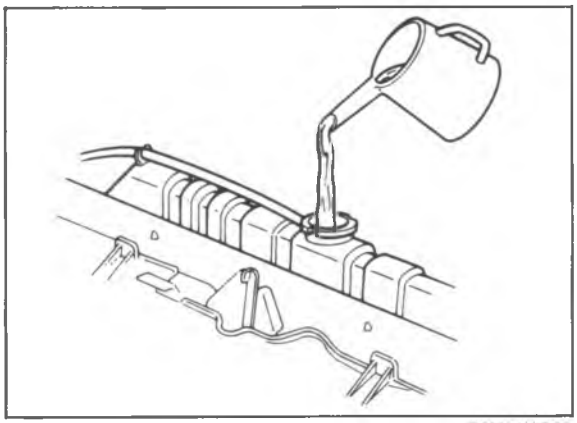

86U01X-029

Steps After Installation

Perform the necessary engine adjustment. (Refer to TUNE-UP PROCEDURE.)

CYLINDER HEAD

Removal

Warning: Release the fuel pressure. (Refer to Section 4.)

1. Disconnect the negative battery cable.
2. Drain the engine coolant.
3. Remove in the sequence shown in the figure, for the specially marked parts referring to removal note.

86U01X-030

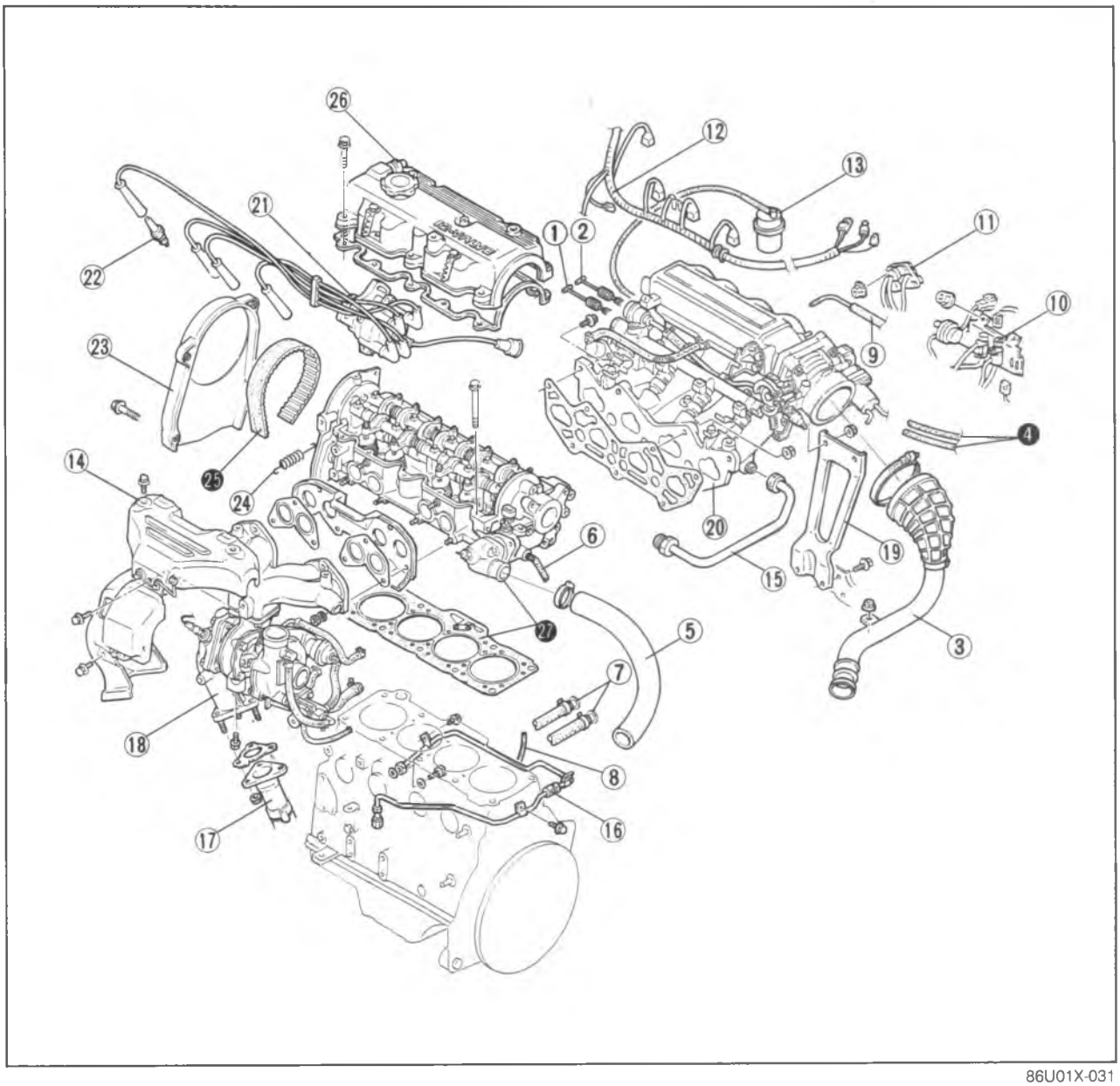

86U01X-031

1. Accelerator cable
2. Throttle cable (ATX)
3. Air intake pipe
4. Fuel hose
5. Upper radiator hose
6. Water bypass hose
7. Heater hose
8. Oil cooler hose (turbo)
9. Brake vacuum hose
10. Three-way solenoid assembly
11. EGR solenoid assembly
12. Engine harness connector and ground
13. Vacuum chamber
14. Exhaust manifold insulator
15. EGR pipe
16. Turbocharger oil pipe
17. Exhaust pipe
18. Exhaust manifold and turbocharger
19. Intake manifold bracket
20. Intake manifold assembly
21. Distributor and high-tension lead
22. Spark plug
23. Upper timing belt cover
24. Timing belt tensioner spring
25. Timing belt
26. Cylinder head cover
27. Cylinder head and gasket

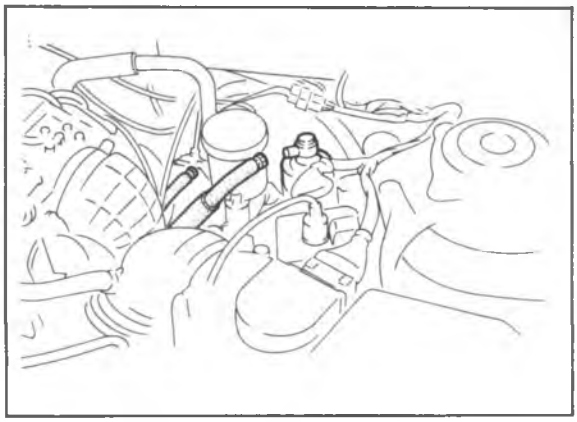

86U01X-032

Removal note
Fuel hose

Warning
a) Cover the hose with a rag because fuel will spray out when disconnecting.
b) Keep sparks and open flame away from the fuel area.

Plug the disconnected hoses to avoid fuel leakage.

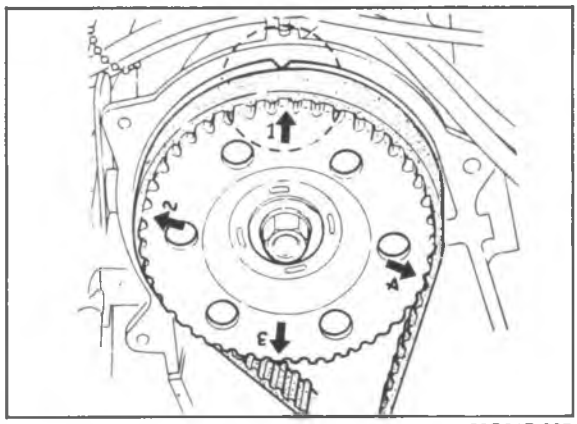

69G01B-035

Timing belt

1. Before removing the timing belt, turn the crankshaft to align the "**↑1**" mark of the camshaft pulley with the front housing timing mark.

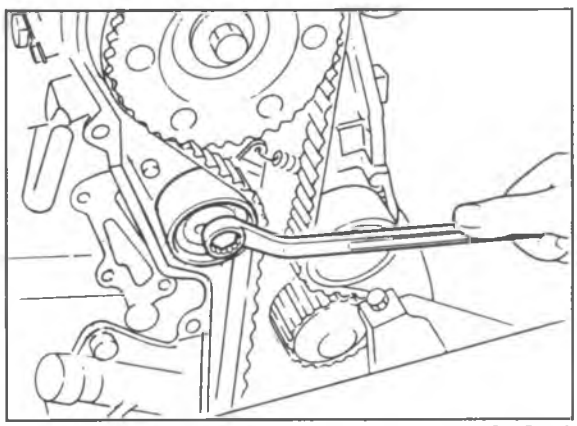

69G01B-036

2. Loosen the timing belt tensioner lock bolt.
3. Shift the tensioner outward as far as possible, then temporarily tighten it.

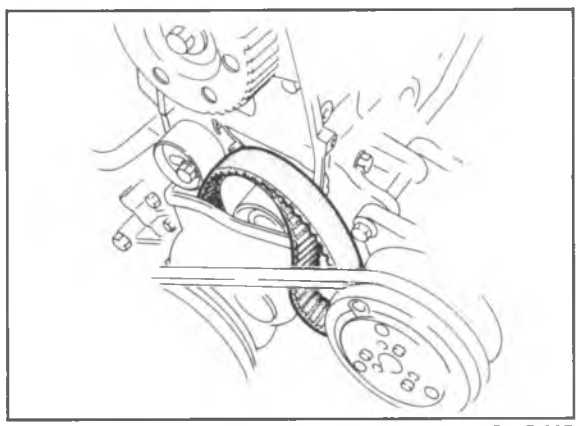

69G01B-037

4. Remove the timing belt and secure it out of the way to prevent damage during removal and installation of the cylinder head.

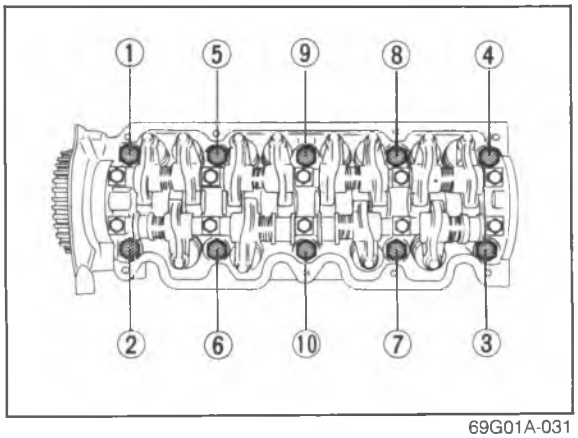

69G01A-031

Cylinder head bolt
Loosen the cylinder head bolts in two or three steps, and in the order shown in the figure.

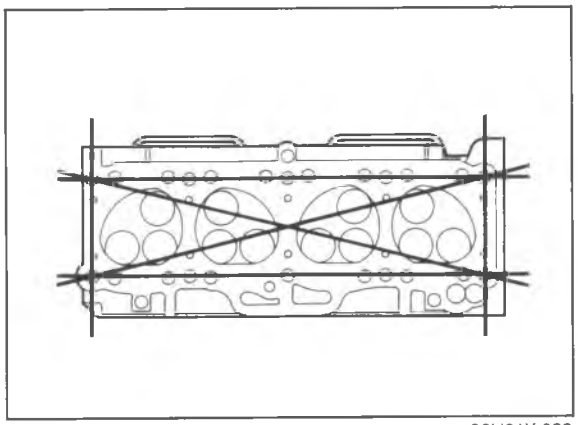

86U01X-033

Disassembly of Cylinder Head
Refer to page 1—36.

Inspection of Cylinder Head
Refer to page 1—42.

Assembly of Cylinder Head
Refer to page 1—67.

Installation

Install in the reverse order of removal, referring to the installation note.

Note

a) Position the hose clamp in the original location on the hose.
b) Squeeze the clamp lightly with large pliers to ensure a good fit.

Torque Specifications

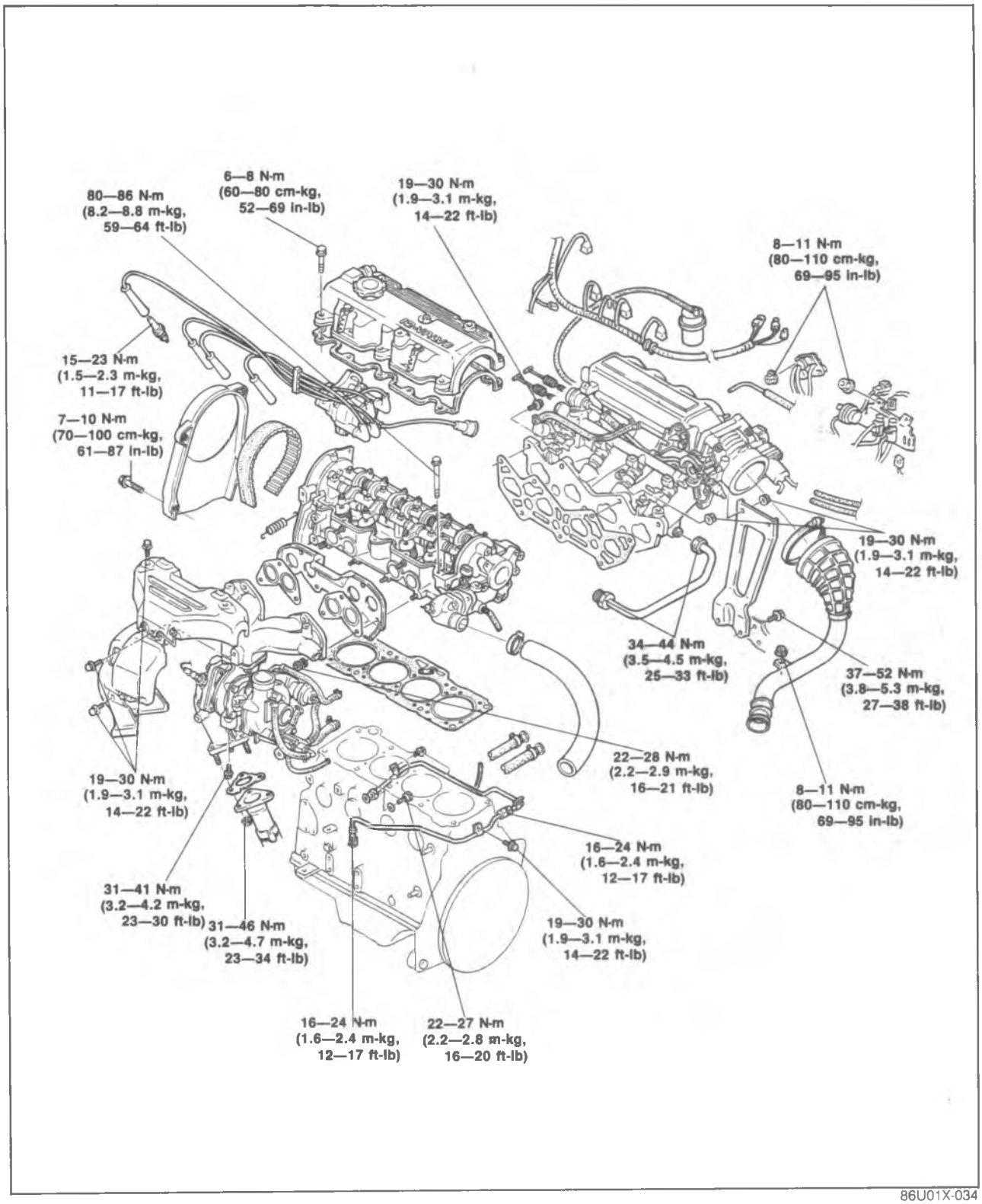

86U01X-034

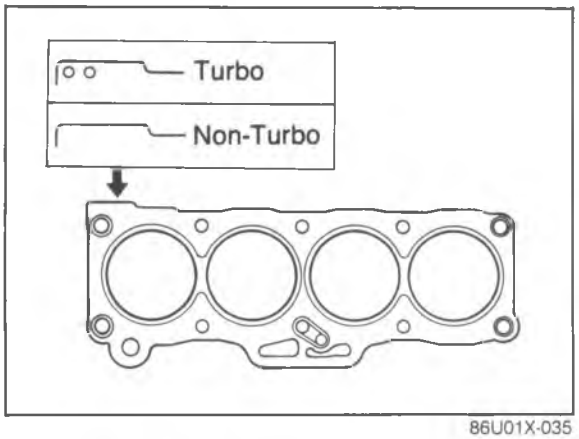

86U01X-035

Installation note
Cylinder head

1. Thoroughly remove all dirt and oil from the top of the cylinder block with a rag.
2. Place a new cylinder head gasket in position.

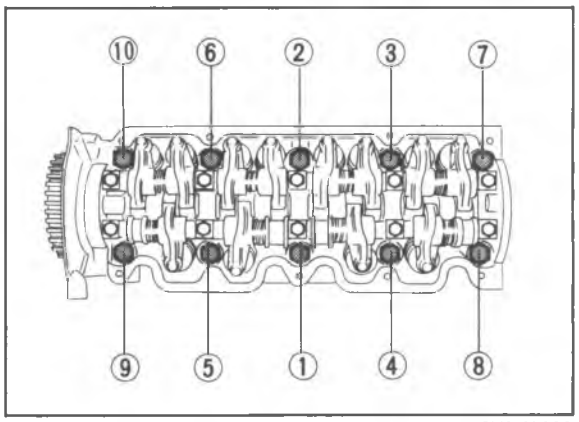

86U01X-036

3. Set the cylinder head in place.
4. Apply engine oil to the bolt threads and seat faces.
5. Tighten the cylinder head bolts in two or three steps in the order shown in the figure.

Tightening torque:
80—86 N·m (8.2—8.8 m-kg, 59—64 ft-lb)

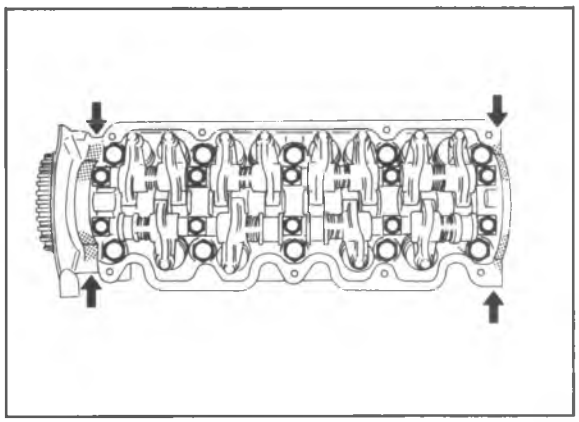

86U01X-037

Cylinder head cover

1. Apply silicon sealant to the shaded area shown in the figure.
2. Install the cylinder head cover.

Tightening torque:
6—8 N·m (60—80 cm-kg, 52—69 in-lb)

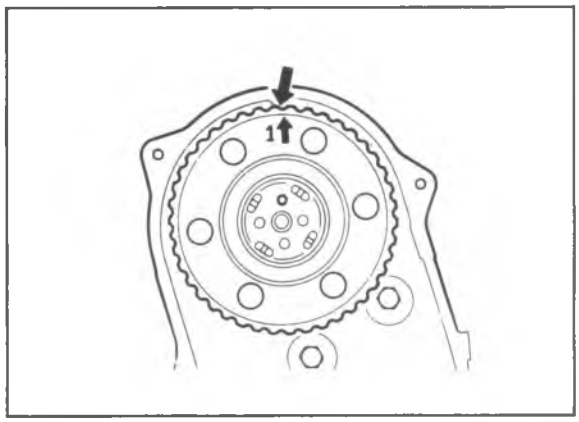

86U01X-038

Timing belt

1. Align the "↑1" mark of the camshaft pulley with the front housing timing mark.
2. Install the timing belt. (Refer to TIMING BELT of ON-VEHICLE MAINTENANCE.)

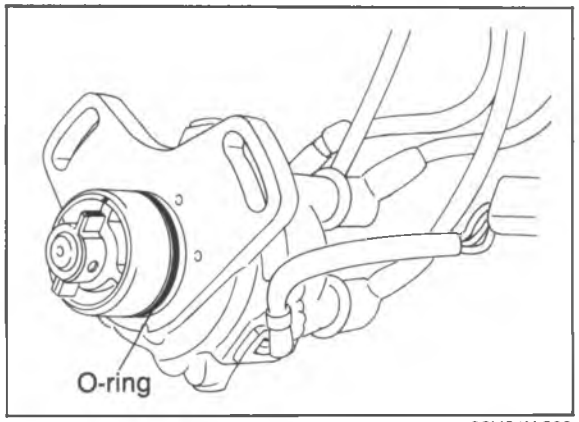

86U01X-039

Distributor

1. Apply engine oil to the O-ring, and position it on the distributor.
2. Apply engine oil to the blade.
3. Install the distributor into the rear housing.
4. Loosely tighten the distributor mounting bolt.

Engine harness connector

Install the engine harness connectors.

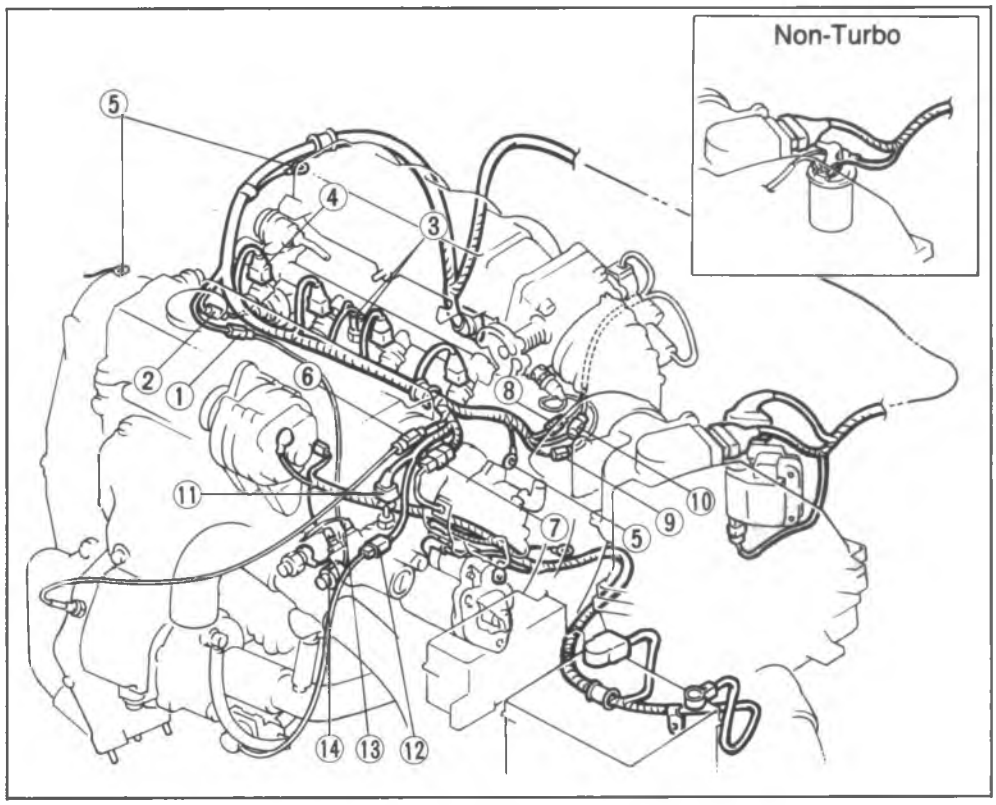

86U01X-040

1. Knock sensor (turbo)
2. EGR position sensor (turbo)
3. Water thermo switch
4. Injector
5. Engine ground
6. Oxygen sensor
7. Crank angle sensor (turbo)
8. Solenoid valve (idle speed control)
9. Idle switch
10. Throttle sensor
11. Water thermo sensor
12. Waste gate solenoid valve (turbo)
13. Heat gauge unit
14. Water thermo switch

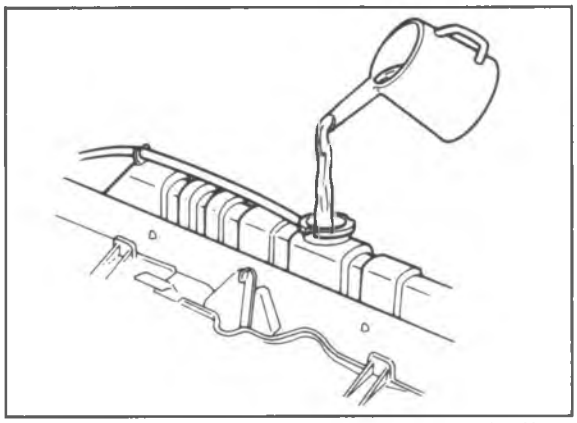

86U01X-041

Steps After Installation

1. Fill the radiator with the specified amount and type of coolant.
2. Perform the necessary engine adjustments. (Refer to TUNE-UP PROCEDURE.)

VALVE SEAL

Removal

1. Disconnect the negative battery cable.
2. Drain the engine coolant.
3. Remove in the sequence shown in the figure, for the specially marked parts referring to removal note.

86U01X-042

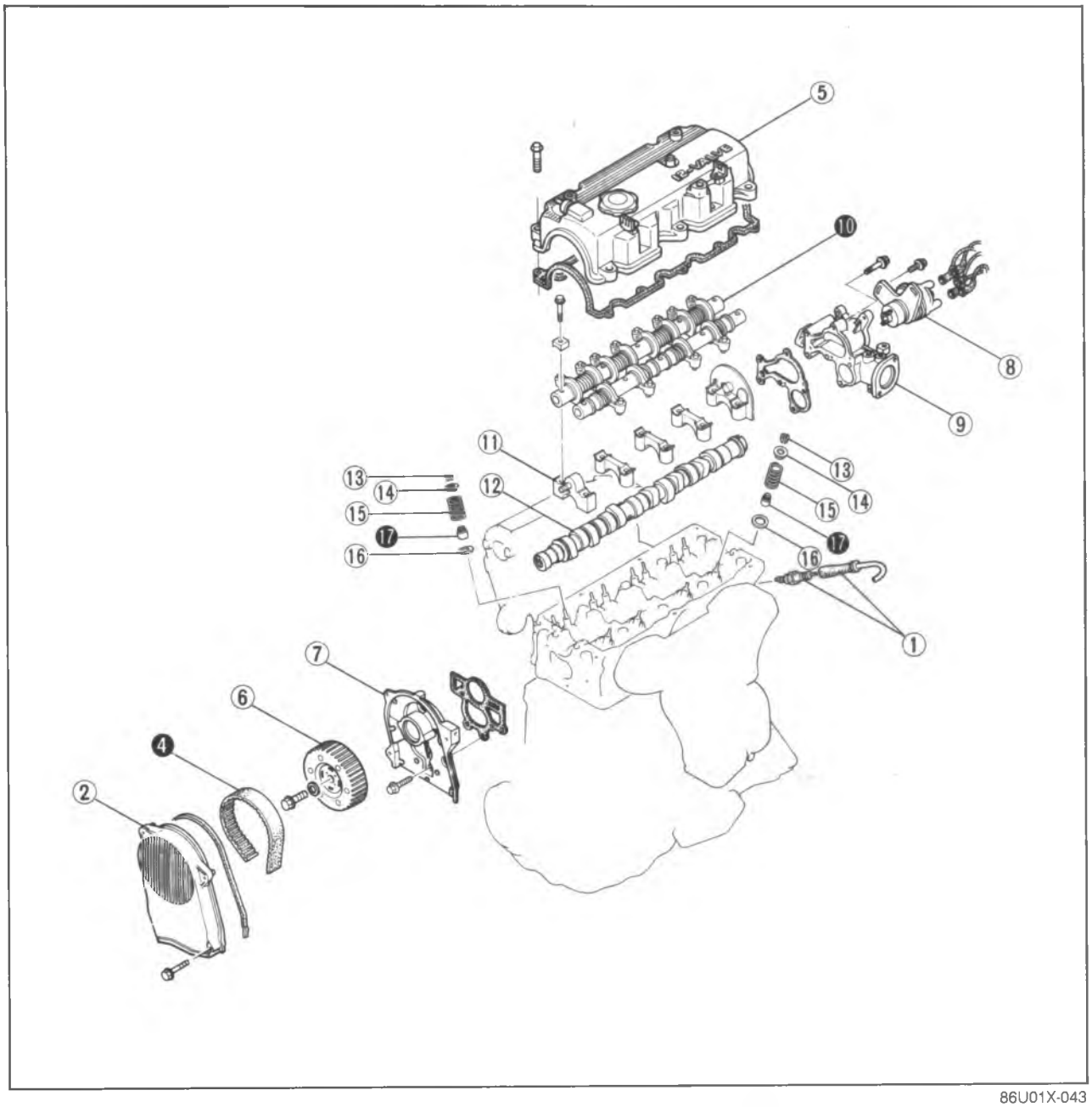

86U01X-043

1. High-tension lead and spark plug
2. Upper timing belt cover
3. Timing belt tensioner spring
4. Timing belt
5. Cylinder head cover
6. Camshaft pulley
7. Front housing
8. Distributor
9. Rear housing
10. Rocker arm and shaft assembly
11. Camshaft cap
12. Camshaft
13. Valve keeper
14. Upper valve spring seat
15. Valve spring
16. Lower valve spring seat
17. Valve seal

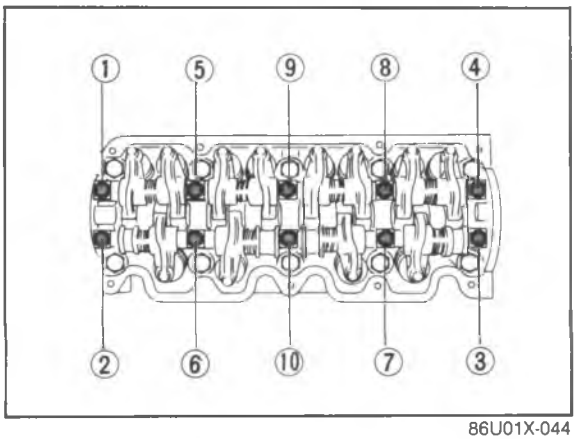

86U01X-044

Removal note
Timing belt
Remove the timing belt. (Refer to page 1—10.)

Rocker arm and shaft assembly
Loosen the rocker arm shaft bolts in two or three steps in the order shown in the figure.

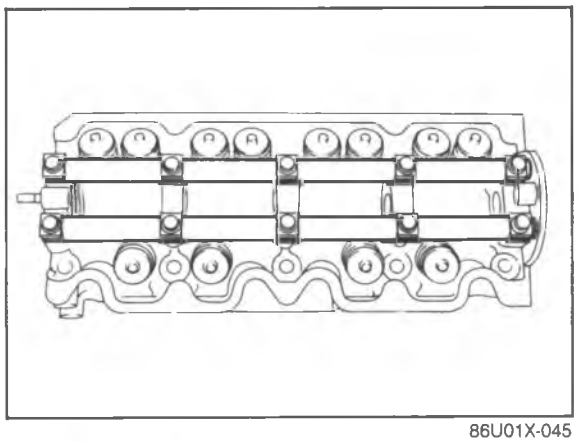
86U01X-045

Valve seal
1. Remove the rocker arms and springs from the rocker arm shaft.
2. Install the camshaft caps and rocker arm shafts onto the cylinder head.
3. Plug the oil drain hole with a rag to prevent the possibility of the valve keepers from falling into the oil pan.

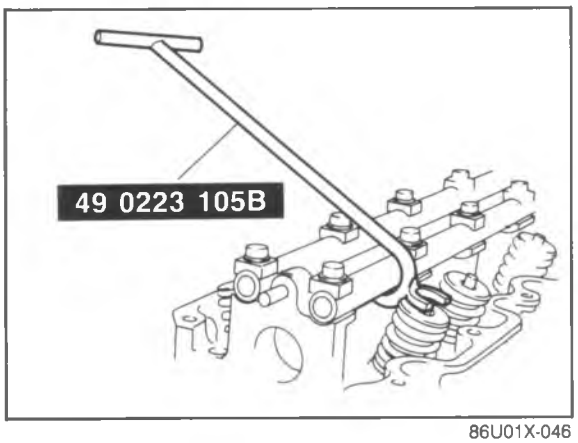

86U01X-046

4. Turn the crankshaft to position the piston of the valve seal to be replaced at top dead center.
5. Remove the valve keepers with the **SST**.
6. Remove the valve spring and spring seats.

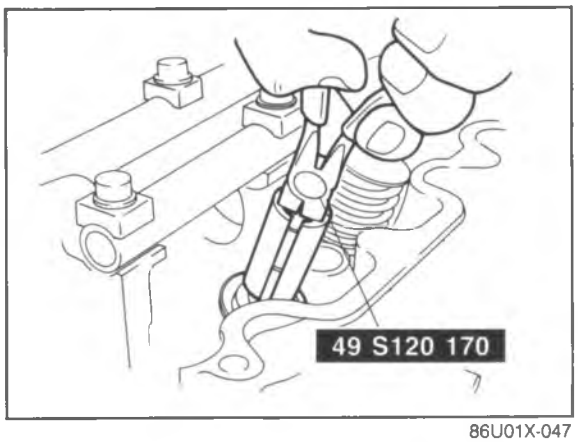

86U01X-047

7. Remove the valve seal from the valve guide with the **SST**.

Caution
Do not turn the crankshaft while the valve spring is removed.
Replace the valve seals at every cylinders.

Installation

Install in the reverse order of removal, referring to installation note.

Torque Specifications

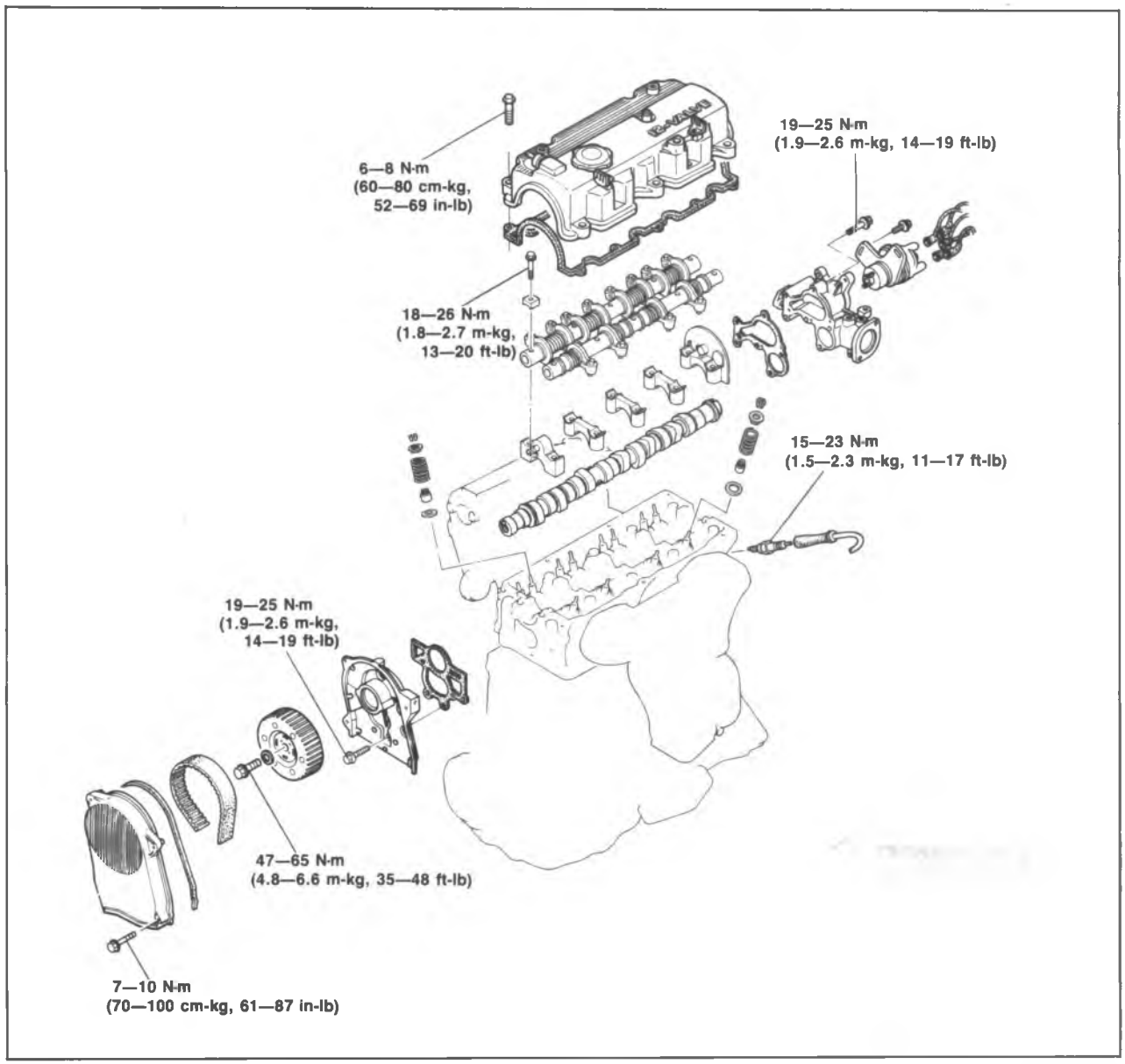

86U01X-048

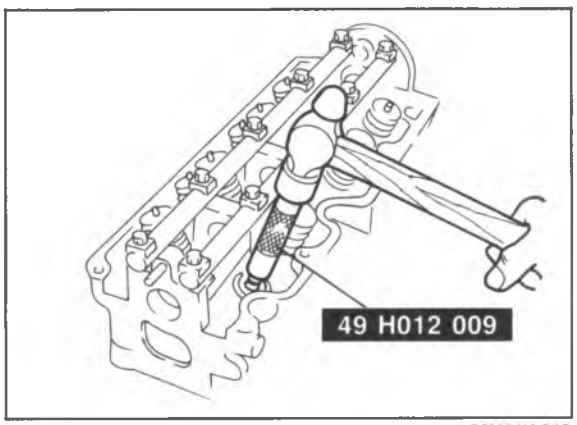

86U01X-049

Installation note

Valve seal

1. Apply engine oil to the inside of the new valve seal.
2. Push it on gently with the **SST**.

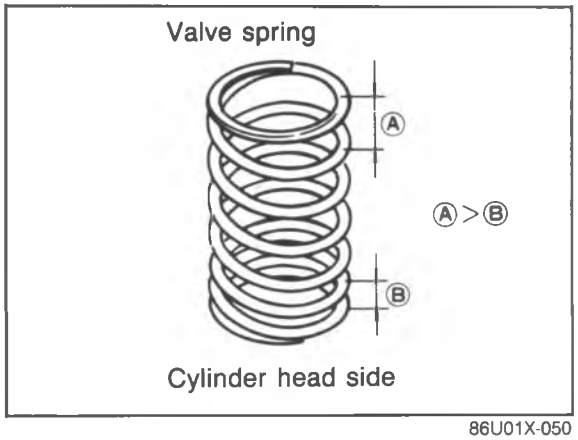

86U01X-050

Valve spring

1. Install the valve spring with the narrower pitch toward the cylinder head side.
2. Install the valve keepers, and tap the end of the valve stem lightly two or three times with a plastic hammer to confirm that the keepers are all fully seated.

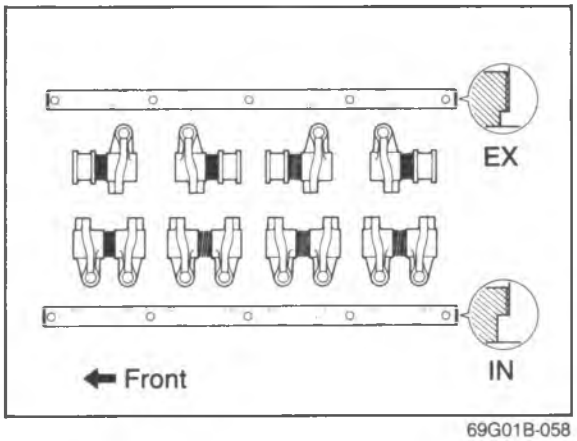

69G01B-058

Rocker arm and shaft assembly

1. Remove the rocker arm shafts and camshaft caps.
2. Assemble the rocker arms and springs to the shaft.

Note

a) The intake side shaft has twice as many oil holes as the exhaust side shaft.

b) The stepped ends are the rear sides of both intake and exhaust shafts.

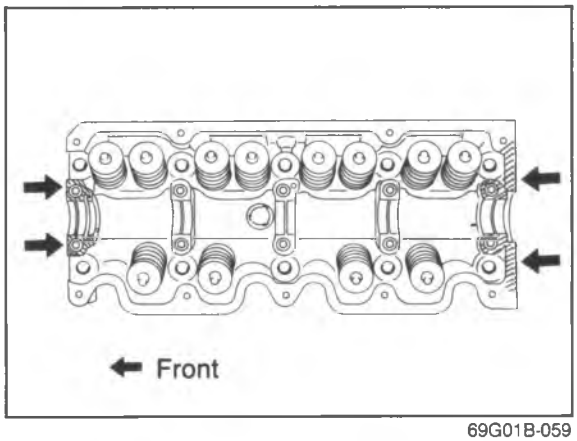

69G01B-059

3. Apply sealant to the shaded areas as shown in the figure.

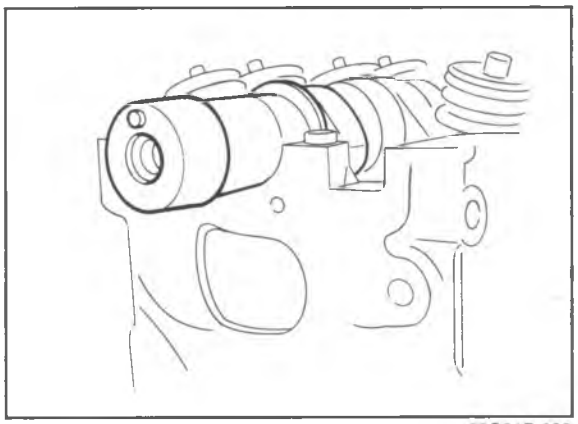

69G01B-060

4. Apply engine oil to the camshaft journals.
5. Install the camshaft with its dowel pin upward.

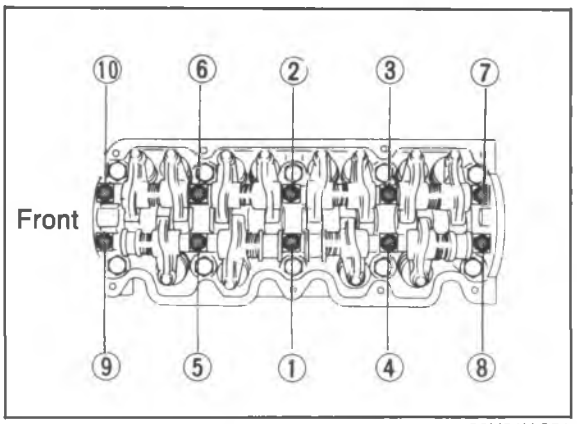

86U01X-051

6. Install the camshaft caps.
7. Install the rocker arm and shaft assemblies on the cylinder head, and tighten them in three steps in the order shown in the figure.

Tightening torque:
18—26 N·m (1.8—2.7 m-kg, 13—20 ft-lb)

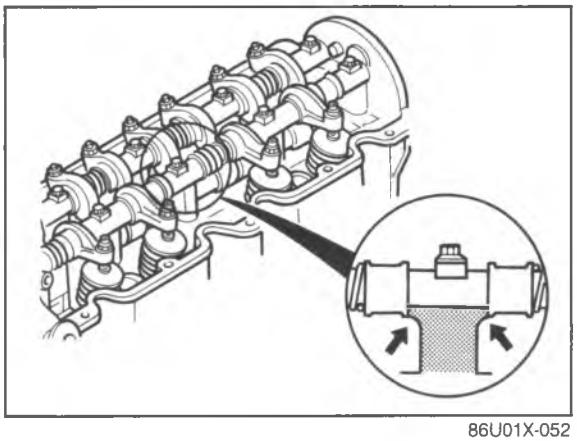
86U01X-052

Caution
Be careful that the rocker arms or spacers do not get caught between the shaft and camshaft cap.

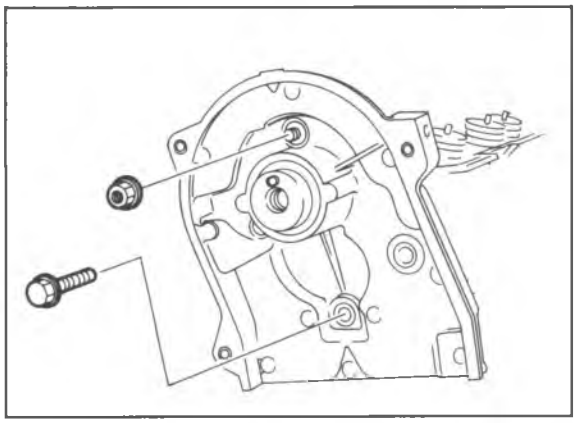
86U01X-212

Front housing
1. Replace the oil seal in the front housing.
2. Apply engine oil to the oil seal lip.
3. Install the front housing along with a new gasket.

Tightening torque:
19—25 N·m (1.9—2.6 m-kg, 14—19 ft-lb)

Rear housing
Install the rear housing along with a new gasket.

Tightening torque:
19—25 N·m (1.9—2.6 m-kg, 14—19 ft-lb)

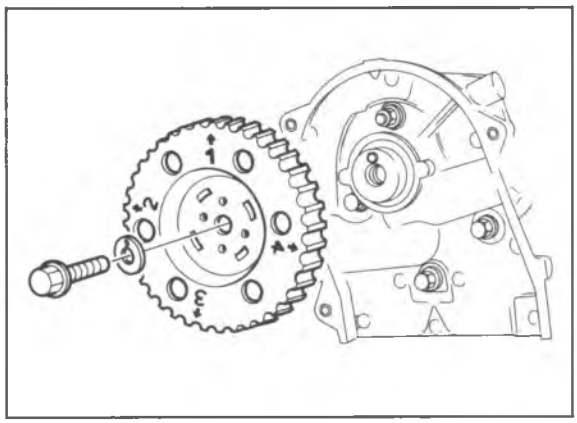
69G01B-064

Camshaft pulley
1. Install the camshaft pulley so that the "↑1" mark is aligned with the camshaft dowel pin straight up.
2. Tighten the lock bolt.

Tightening torque:
47—65 N·m (4.8—6.6 m-kg, 35—48 ft-lb)

3. Check that the "↑1" mark of the pulley is aligned with the front housing mating mark.

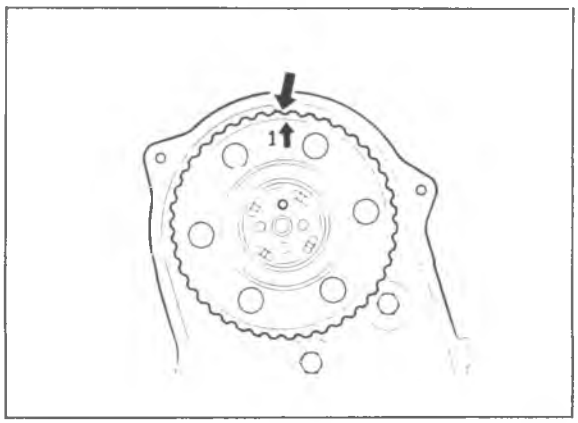

86U01X-053

Timing belt

Install the timing belt. (Refer to TIMING BELT of ON-VEHICLE MAINTENANCE.)

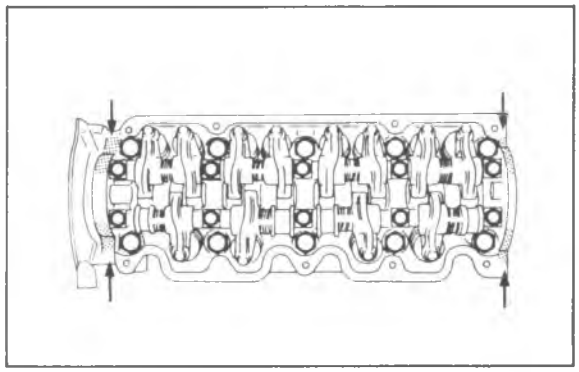

86U01X-054

Cylinder head cover and gasket

1. Clean out used silicon sealant from the gasket and gasket groove.
2. Apply new silicon sealant to the back of the gasket.
3. Apply silicon sealant to the shaded areas shown in the figure.
4. Install the cylinder head cover.

Tightening torque:
6—8 N·m (60—80 cm-kg, 52—69 in-lb)

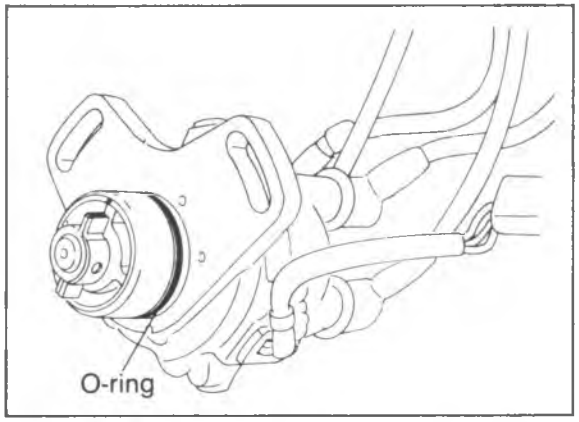

86U01X-039

Distributor

1. Apply engine oil to the O-ring, and position it on the distributor.
2. Apply engine oil to the blade.
3. Install the distributor into the rear housing.
4. Loosely tighten the distributor mounting bolt.

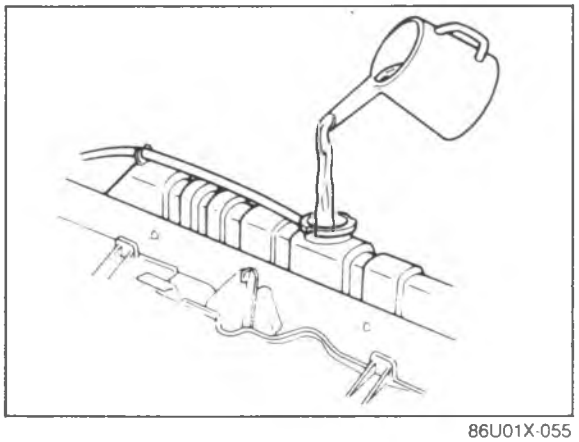

86U01X-055

Steps After Installation

1. Fill the radiator with the specified amount and type of coolant.
2. Perform the necessary engine adjustments. (Refer to TUNE-UP PROCEDURE.)

REMOVAL

Warning: Release the fuel pressure. (Refer to Section 4.)

1. Disconnect the negative battery cable.
2. Drain the engine oil and coolant.
3. Remove in the sequence shown in the figure, for the specially marked parts referring to removal note.

TURBO

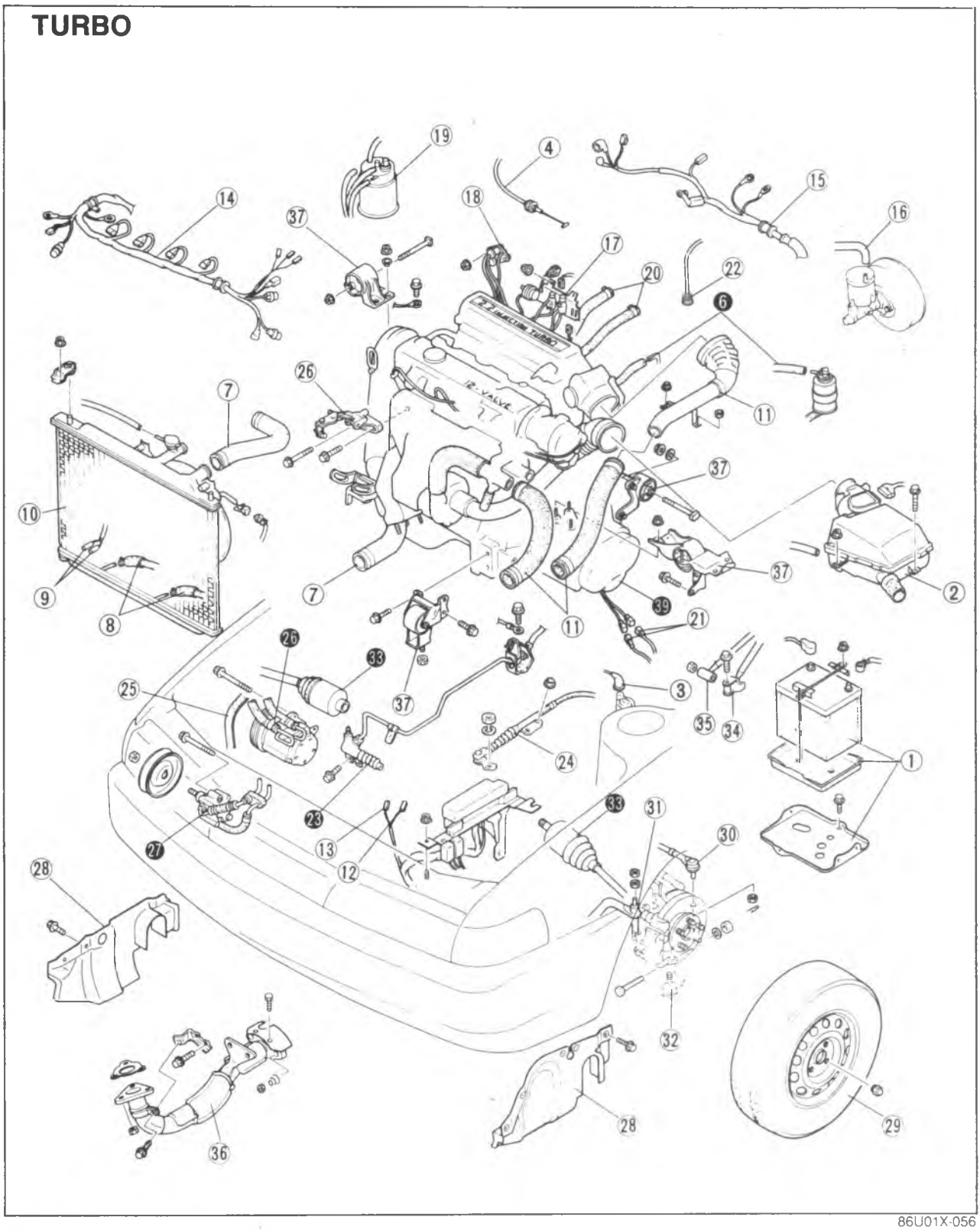

86U01X-056

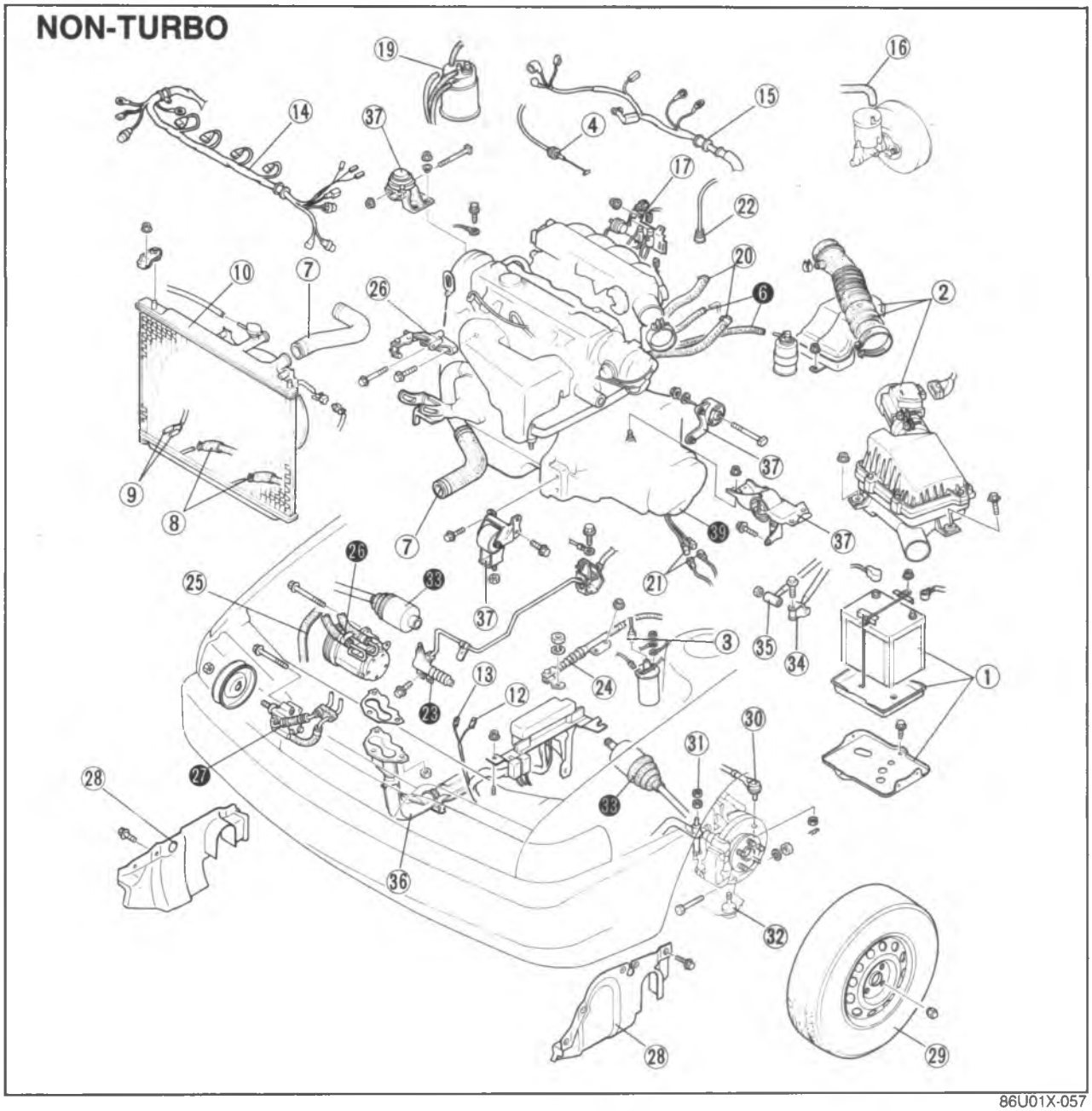

86U01X-057

1. Battery and battery carrier
2. Air-cleaner assembly
3. High-tension lead
4. Accelerator cable
5. Throttle cable (ATX)
6. Fuel hose
7. Radiator hose
8. ATF hose (ATX)
9. Radiator harness
10. Radiator and electric fan
11. Intercooler pipe and hose (turbo)
12. Heat gauge unit connector
13. Water thermo switch connector
14. EGI harness
15. Engine harness
16. Brake vacuum hose
17. Three-way solenoid assembly
18. EGR solenoid assembly (turbo)
19. Canister hose
20. Heater hose
21. Transaxle harness
22. Speedometer cable
23. Clutch release cylinder (MTX)
24. Control cable (ATX)
25. Drive belt
26. A/C compressor and bracket
27. P/S oil pump
28. Engine side cover
29. Front wheel
30. Tie-rod end
31. Stabilizer control rod
32. Lower arm bushing
33. Drive shaft
34. Change rod (MTX)
35. Extension bar (MTX)
36. Exhaust pipe
37. Engine mount
38. Engine and transaxle
39. Transaxle

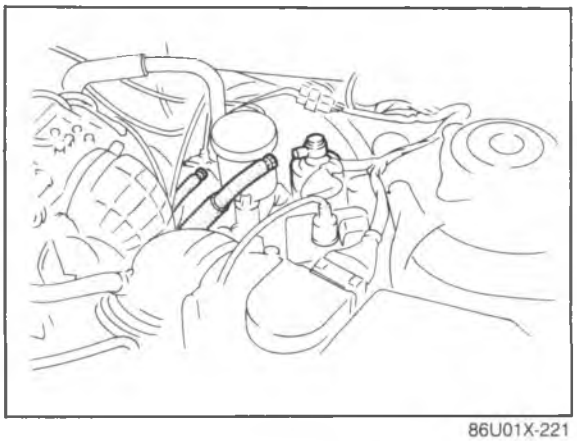

86U01X-221

Removal note
Fuel hose

Warning
a) Cover the hose with a rag because fuel will be splashed out when disconnecting the hose.
b) Keep sparks and open flames away from the fuel area.

After disconnecting the fuel hoses, plug them to avoid fuel leakage.

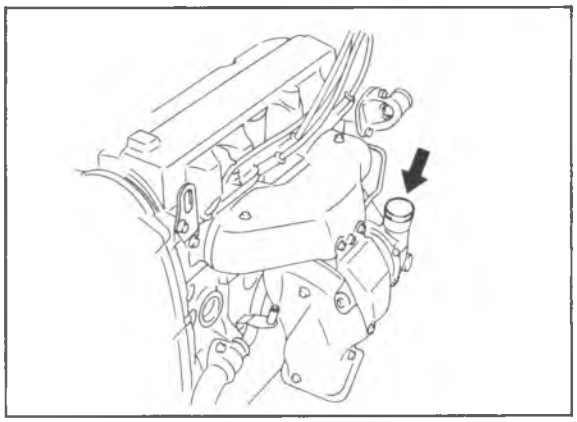

86U01X-058

Turbocharger
Remove the turbocharger hoses and pipe, them cover the turbocharger wirth a clean rag.

86U01X-059

Clutch release cylinder (MTX)
Remove the clutch release cylinder with the pipe still connected; then avoid the cylinder.

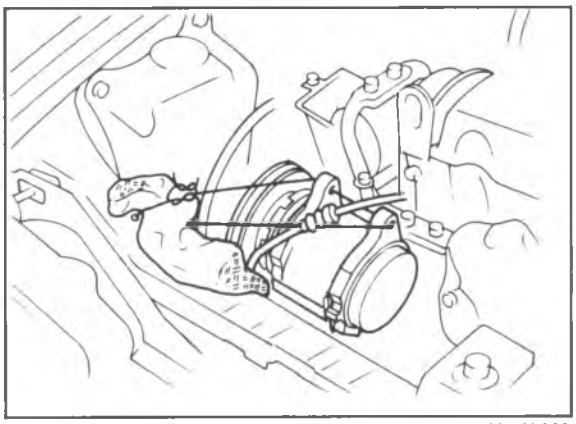

67U01X-029

P/S pump, A/C compressor
Remove the P/S pump and A/C compressor with the hoses still connected to them, secure the pump and compressor as shown in the figure.

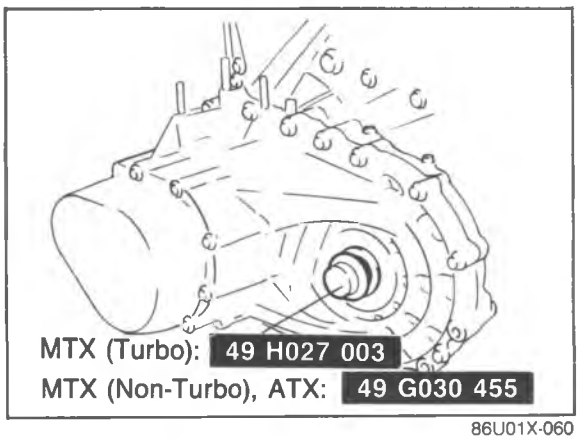

86U01X-060

Driveshaft
Remove the driveshafts. (Refer to Section 9.) Slide the **SST** into the transaxle.

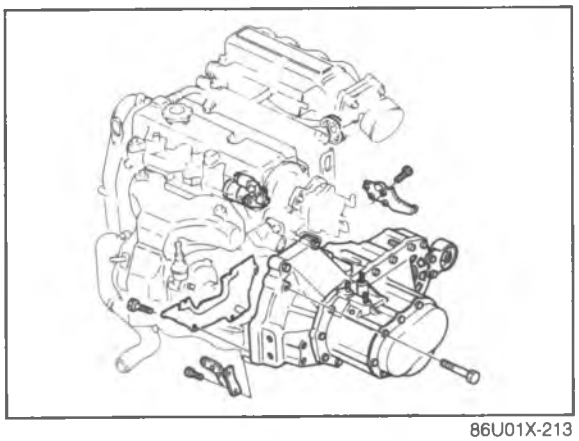

86U01X-213

Transaxle
Separate the transaxle from the engine.

DISASSEMBLY

1. Remove in the sequence shown in the figure, for the specially marked parts referring to disassembly note.
2. Code all identical parts (such as pistons, piston rings, connecting rods, and valve springs) so that they can be reinstalled in the cylinder from which they were removed.
3. Clean the parts with steam, blow off any remaining water with compressed air.

Note
Care should be taken during the disassembly of any part or system to study its order of assembly. Any deformation, wear, or damage should also be noted.

AUXILIARY PARTS

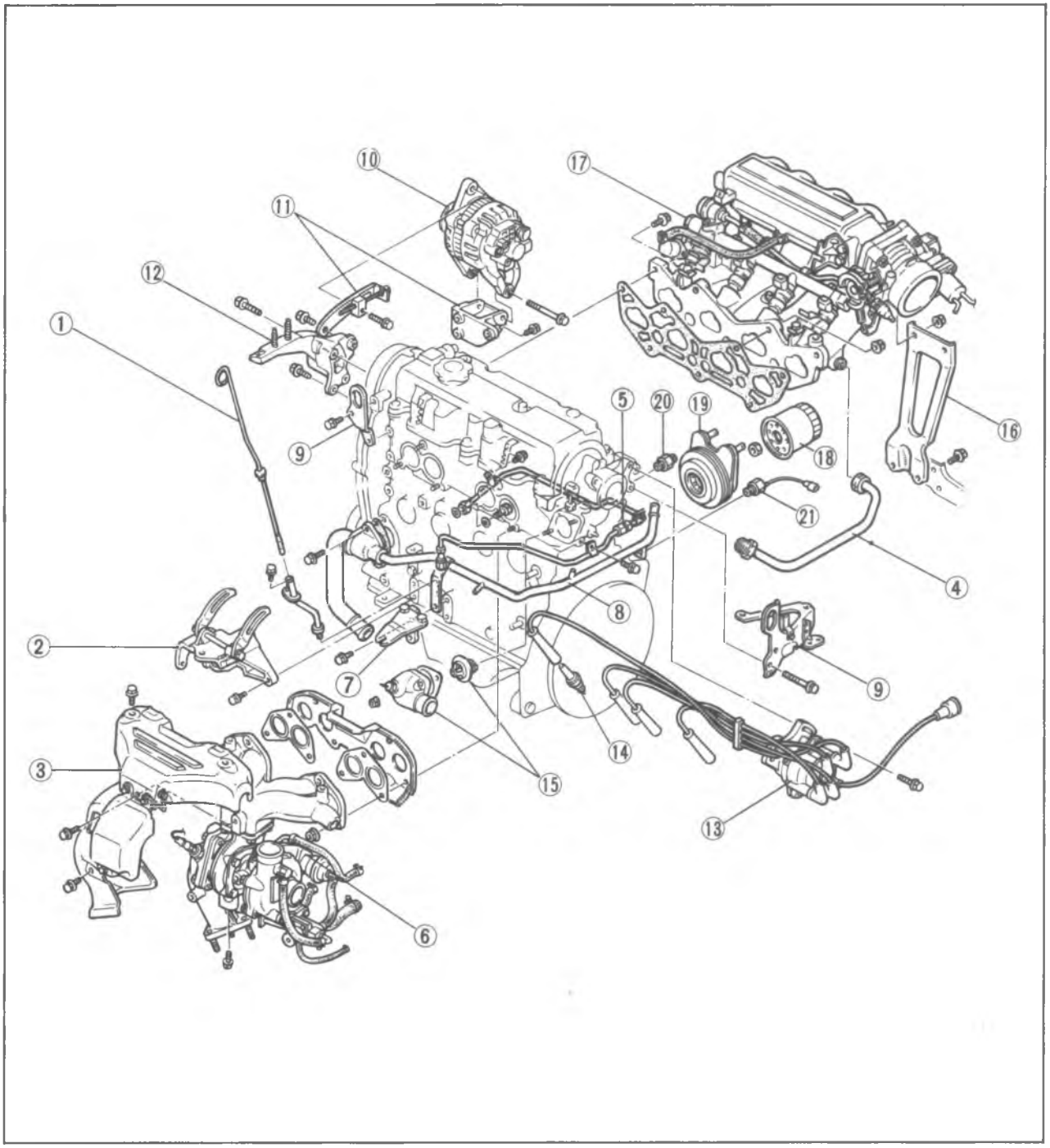

86U01X-061

1. Oil level gauge
2. P/S oil pump bracket
3. Exhaust manifold insulator
4. EGR pipe
5. Turbocharger oil pipe (turbo)
6. Exhaust manifold assembly
7. Turbocharger bracket (turbo)
8. Coolant inlet pipe and bypass pipe
9. Engine hanger
10. Alternator
11. Alternator strap and bracket
12. Engine mount bracket
13. Distributor and high-tension lead
14. Spark plug
15. Thermostat and thermostat cover
16. Intake manifold bracket
17. Intake manifold assembly
18. Oil filter
19. Oil cooler (turbo)
20. Oil pressure switch
21. Knock sensor (turbo)

86U01X-062

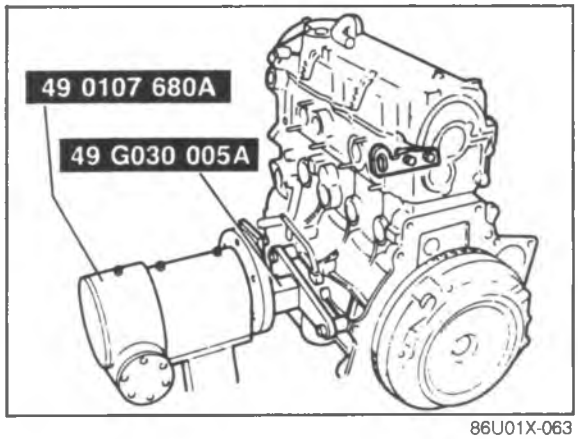

86U01X-063

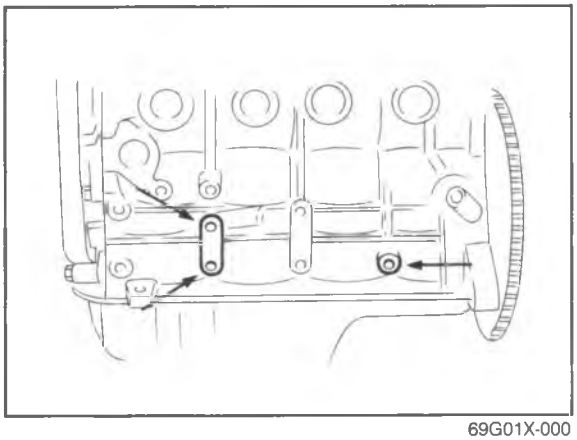

69G01X-000

Disassembly note
Engine hanger
Remove the exhaust manifold; then connect the **SST** to the engine.

TIMING BELT

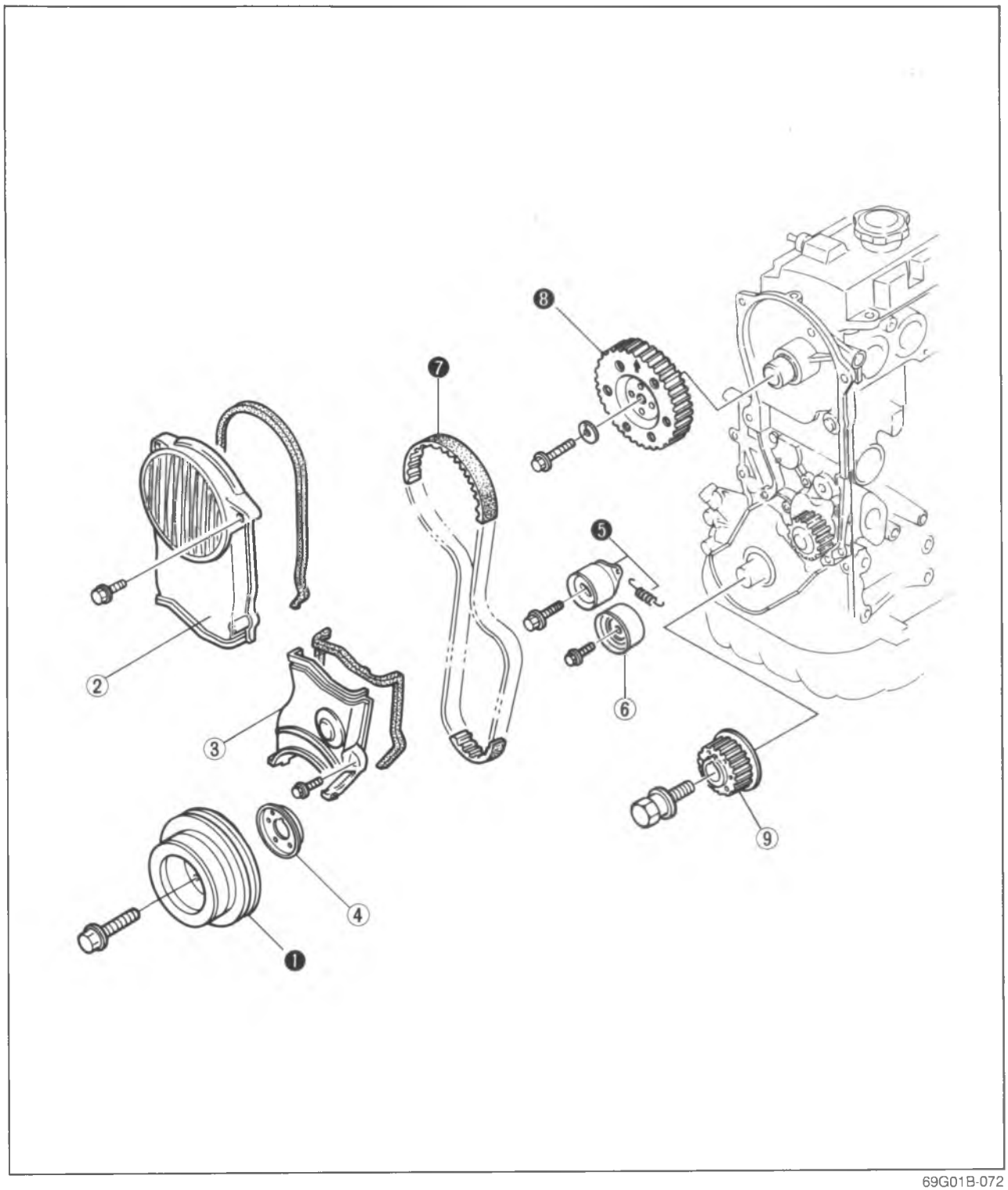

69G01B-072

1. Crankshaft pulley
2. Upper timing belt cover
3. Lower timing belt cover
4. Baffle plate
5. Timing belt tensioner and spring
6. Timing belt idler pulley
7. Timing belt
8. Camshaft pulley
9. Timing belt pulley

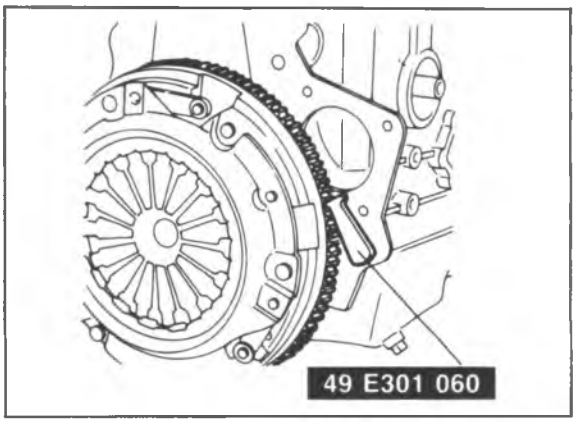

86U01X-222

Disassembly note
Crankshaft pulley
1. Set the **SST** against the flywheel.
2. Remove the crankshaft pulley.

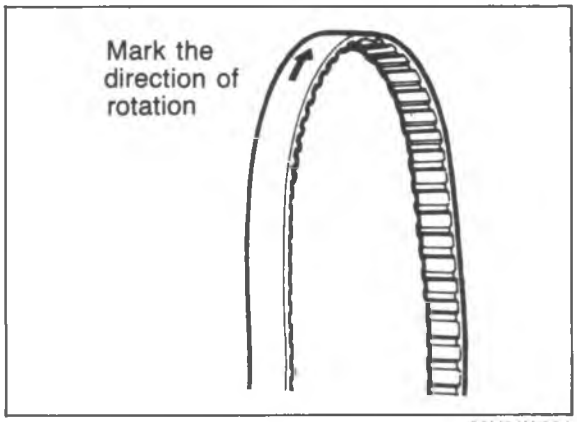

86U01X-064

Timing belt
1. Loosen the tensioner lock bolt, and remove the tensioner spring after.
2. Mark the timing belt rotation for proper reinstallation if it is reused.
3. Remove the timing belt.

Caution
Be careful not to allow oil or grease on the belt.

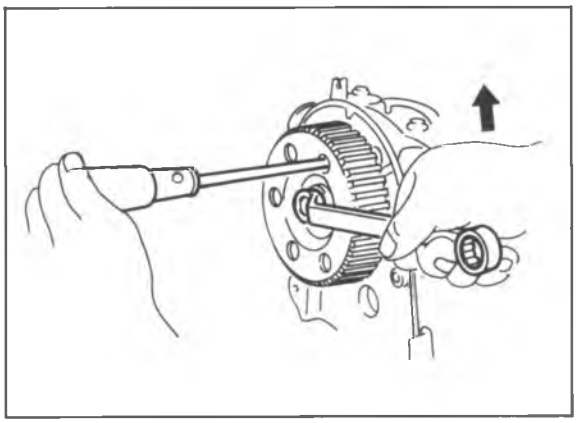

69G01B-074

Camshaft pulley
Remove the pulley lock nut using a screw driver to prevent the camshaft from turning.

CYLINDER HEAD

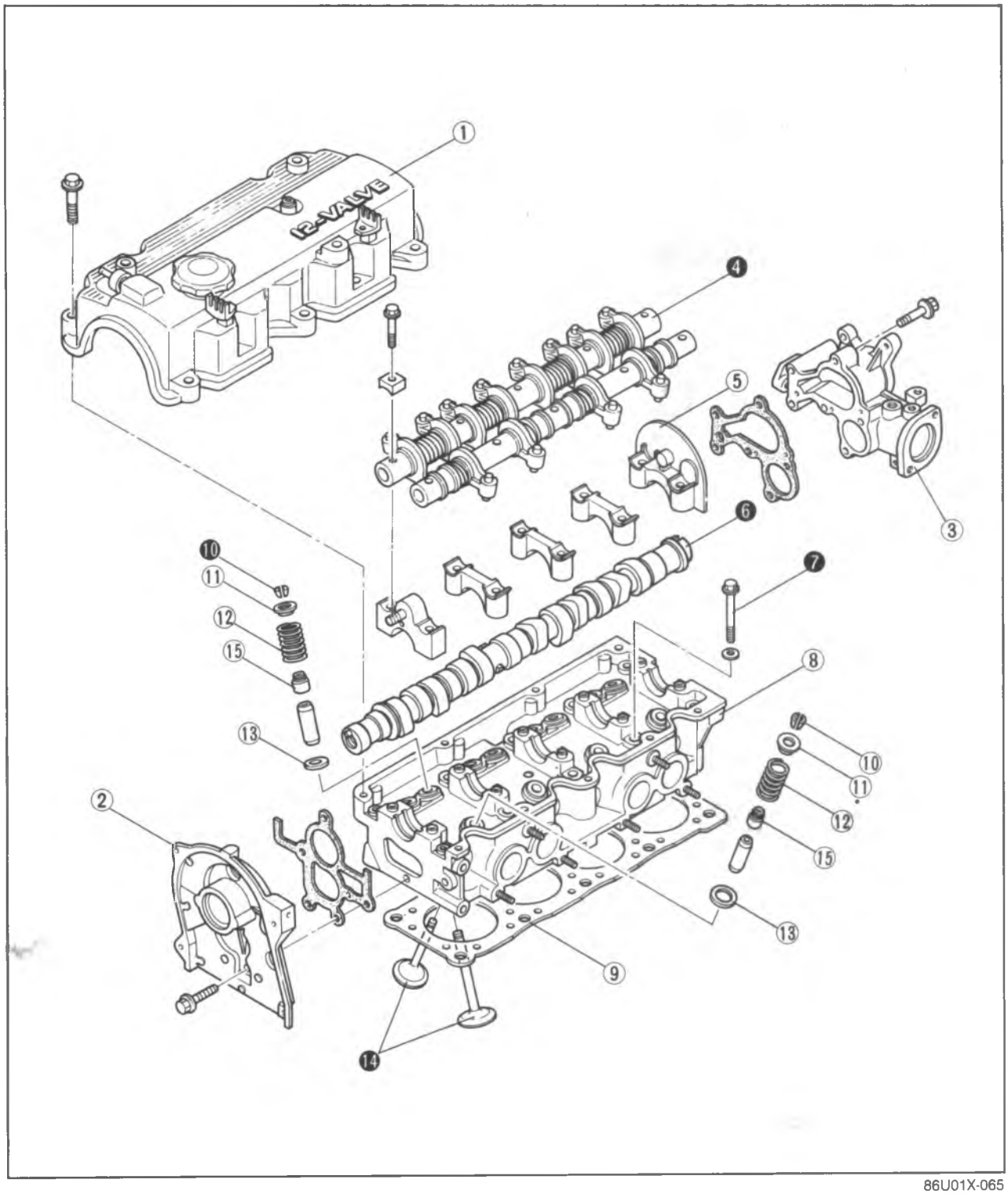

86U01X-065

1. Cylinder head cover
2. Front housing
3. Rear housing
4. Rocker arm and shaft assembly
5. Camshaft cap
6. Camshaft
7. Cylinder head bolt
8. Cylinder head
9. Cylinder head gasket
10. Valve keeper
11. Upper spring seat
12. Valve spring
13. Lower spring seat
14. Valve
15. Valve seal

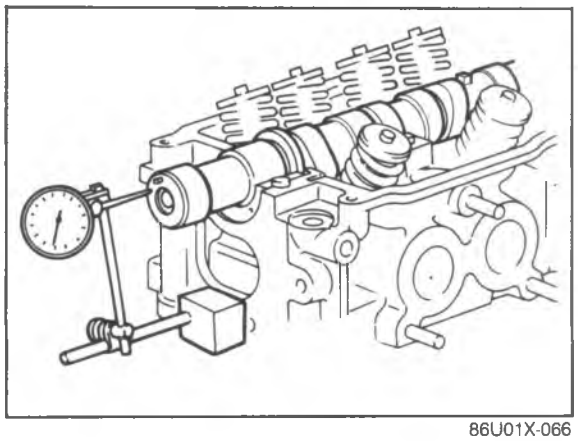

86U01X-066

Disassembly note

Camshaft

Before removing the rocker arm and shaft assembly, clean the bearings and journals, and measure the following:

1. Camshaft end play. (Refer to page 1—48.)
2. Camshaft journals oil clearance. (Refer to page 1—48.)

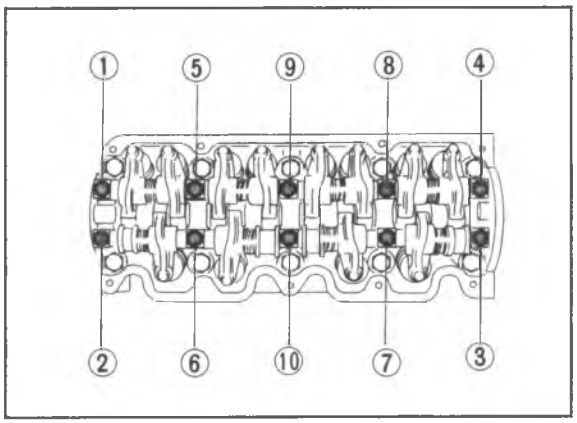

86U01X-067

Rocker arm and shaft assembly

1. Loosen the bolts in two or three steps in the order shown in the figure.
2. Remove the rocker arm and shaft assembly together with the bolts.

Caution

a) Do not mixup the various parts of the rocker arm and shaft assembly.

b) Do not remove the HLA unless necessary.

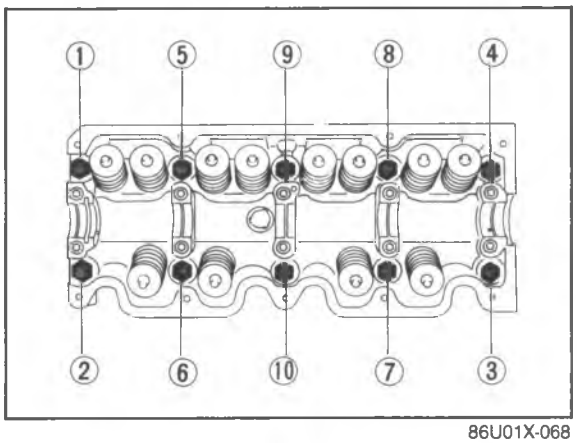

86U01X-068

Cylinder head bolt

Loosen the cylinder head bolts in two or three steps in the order shown in the figure.

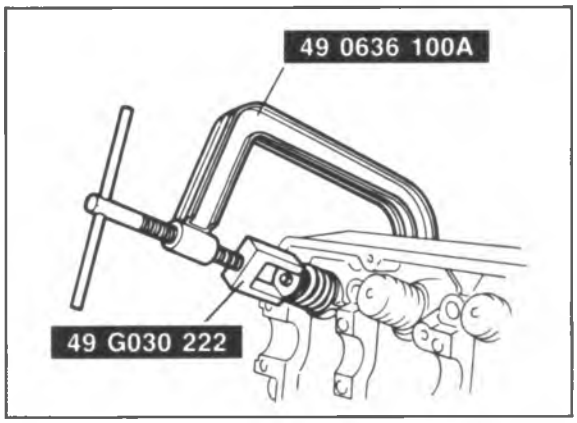

86U01X-069

Valve

Remove the valves from the cylinder head with the **SST**.

CYLINDER BLOCK—I

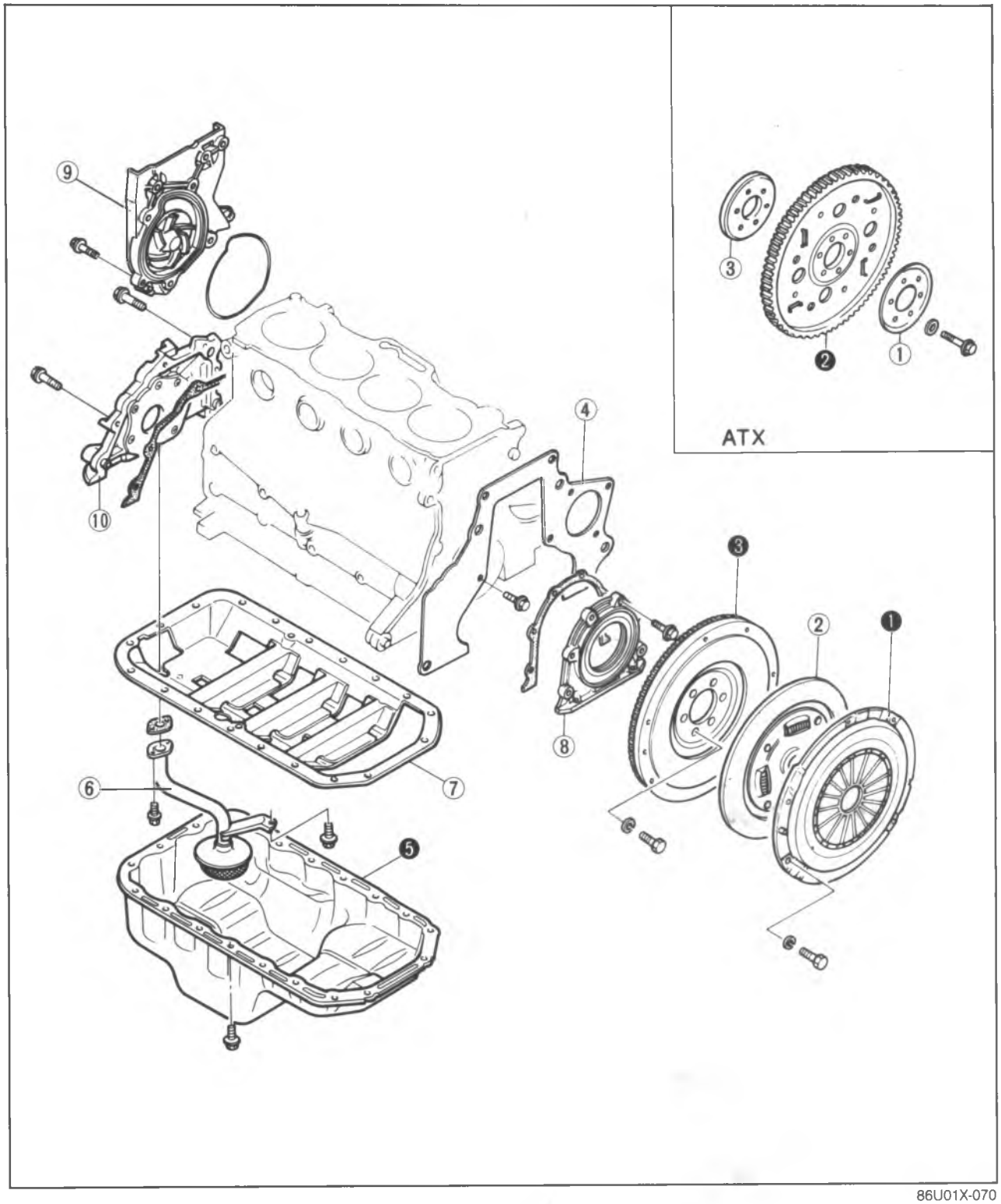

1. Clutch cover (MTX), Backing plate (ATX)
2. Clutch disc (MTX), Drive plate (ATX)
3. Flywheel (MTX), Adaptor (ATX)
4. End plate
5. Oil pan
6. Oil strainer
7. Stiffener
8. Rear cover
9. Water pump assembly
10. Oil pump assembly

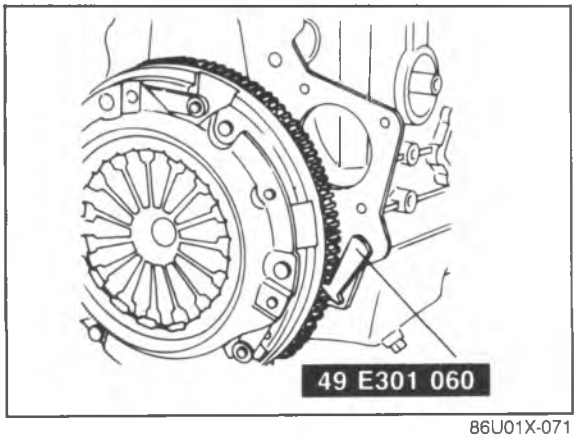

86U01X-071

Disassembly note

Clutch cover, flywheel (MTX) or drive plate (ATX)

Remove the clutch cover and flywheel (MTX), or drive plate (ATX) with the **SST**.

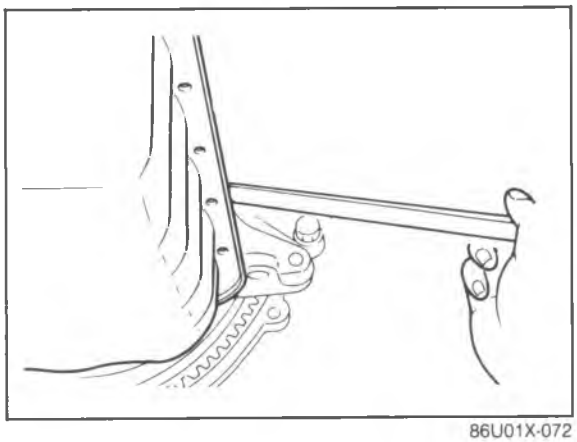

86U01X-072

Oil pan

1. Remove the oil pan mounting bolts.
2. Insert a scraper or a suitable tool between the oil pan and the stiffener to separate them.

   Caution
   Do not bend the oil pan when prying loose.

3. Remove the oil pan.

CYLINDER BLOCK—II

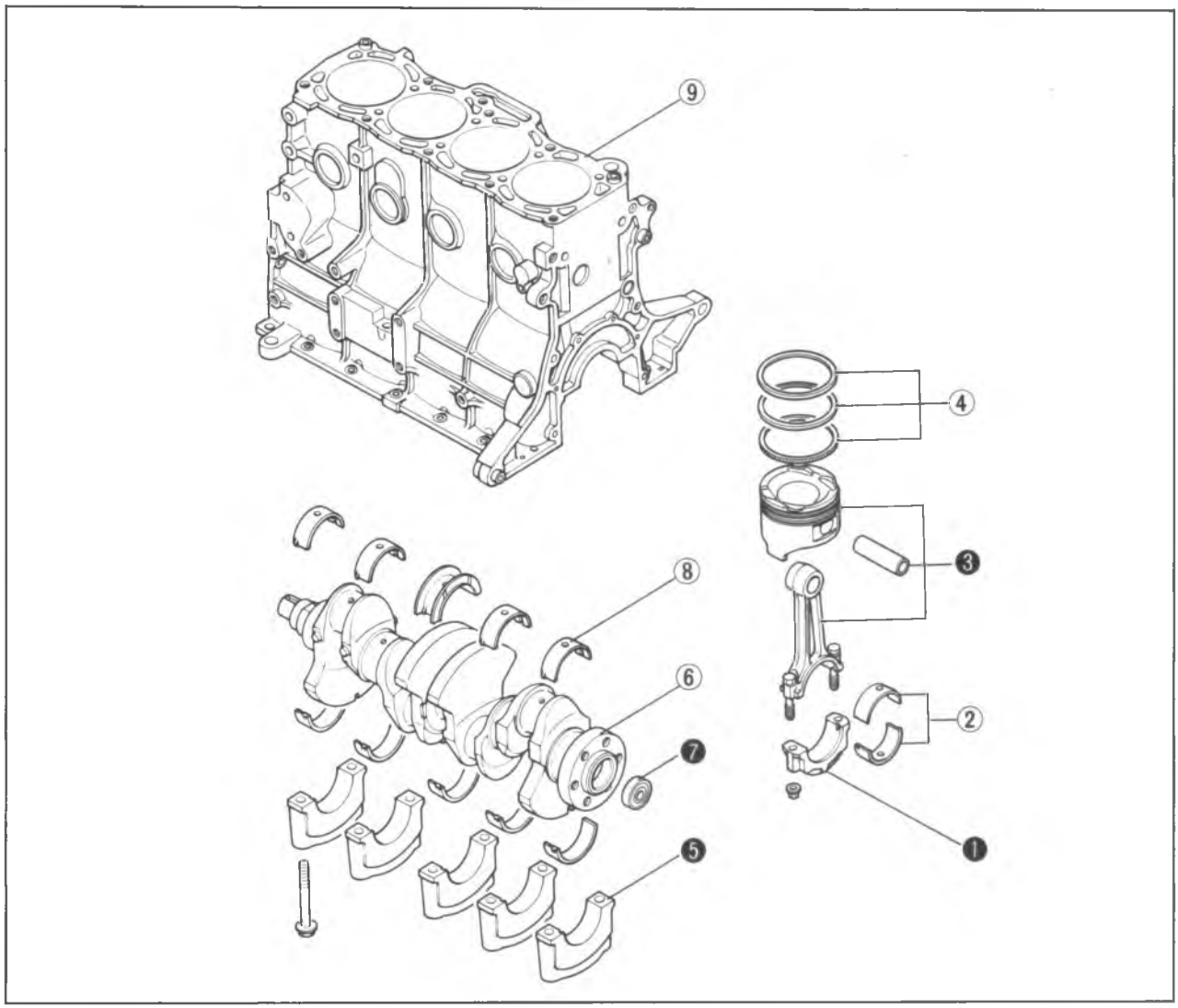

86U01X-073

1. Connecting rod cap
2. Connecting rod bearing
3. Connecting rod and piston
4. Piston ring
5. Main bearing cap
6. Crankshaft
7. Pilot bearing (MTX)
8. Main bearing
9. Cylinder block

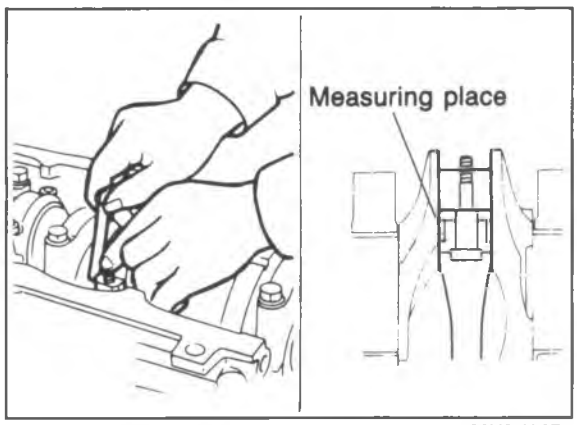

86U01X-074

Disassembly note
Connecting rod and cap

Before removing the connecting rod, clean the bearing, connecting rod, and crank pin, and measure the following:

1. Connecting rod side clearance. (Refer to page 1—61.)
2. Crank pin oil clearance.(Refer to page 1—61.)

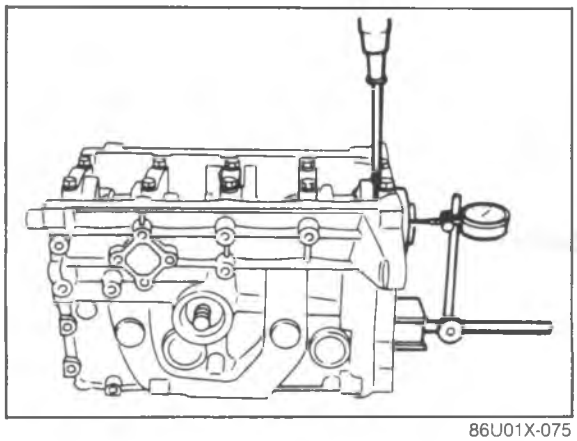

86U01X-075

Main bearing cap

Before removing the main bearing caps, clean the bearings, main journals, and caps, and measure the following:

1. Crankshaft end play. (Refer to page 1—60.)
2. Main journal oil clearance. (Refer to page 1—59.)

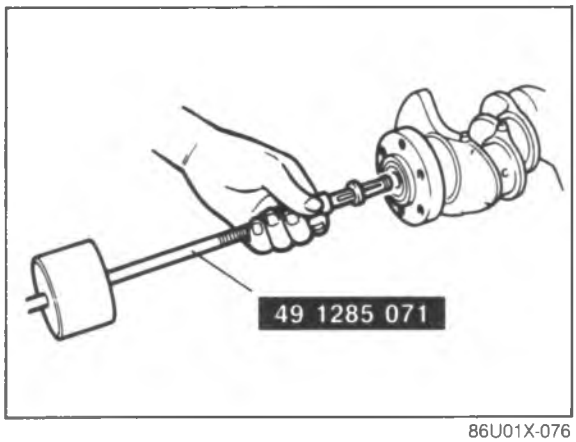

86U01X-076

Pilot bearing (MTX)

Remove the pilot bearing from the crankshaft with the **SST**.

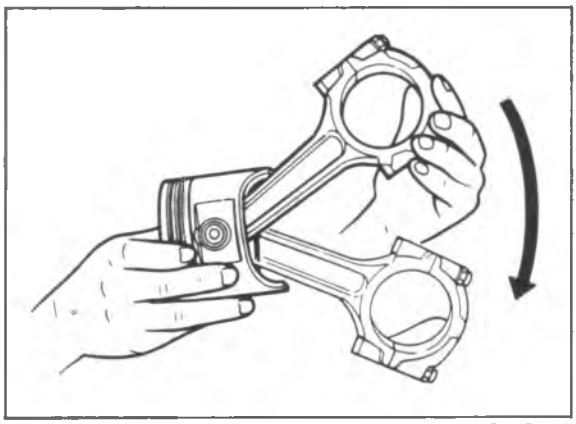

79G01C-050

Piston and connecting rod

1. Before disassembling the piston and connecting rod, check the oscillation torque as shown in the figure.
   If the large end does not drop by its own weight, replace the piston or the piston pin.

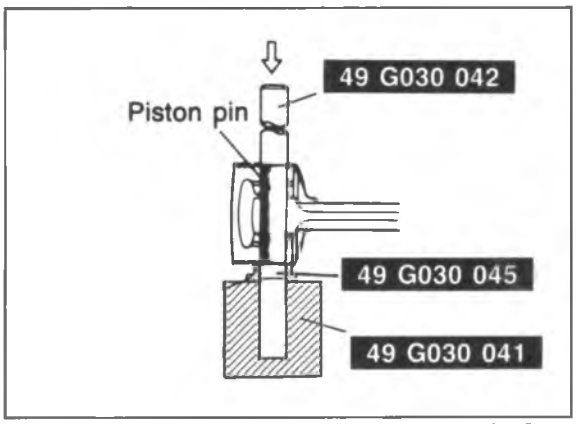

79G01C-051

2. Remove the piston pin with the **SST**.
   While removing the piston pin, check the pressure. If it is lower than **5kN (500kg, 1,100 lb)**, replace the piston pin or connecting rod.

INSPECTION AND REPAIR

1. Clean all parts, taking care to remove any gasket fragments, dirt, oil or grease, carbon, moisture residue, or other foreign materials.
2. Inspect and repair must be performed in the order specified.

Caution
Be careful not to damage the joints or friction surfaces of aluminum alloy components (such as the cylinder head or pistons).

86U01X-077

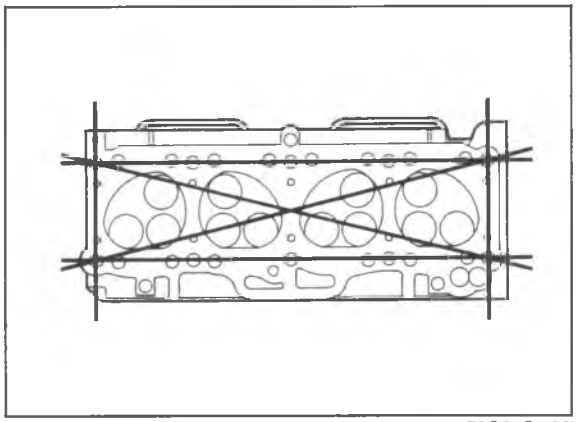

79G01C-106

Cylinder Head

1. Inspect the cylinder head for damage, cracks, and leakage of water or oil. Replace if necessary.
2. Measure the cylinder head distortion in the six directions shown in the figure.

   Distortion: 0.15 mm (0.006 in) max.

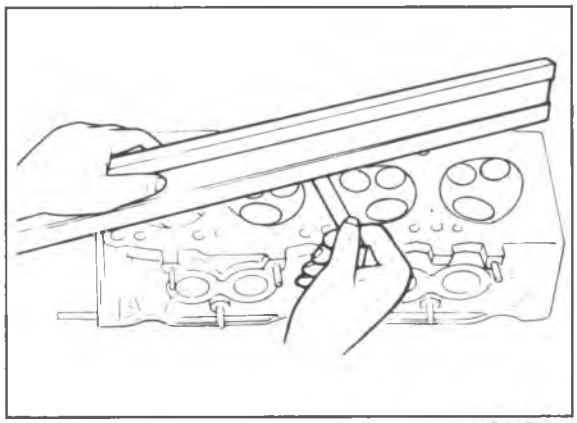

79G01C-052

3. If the cylinder head distortion exceeds specificafi-on, grind the cylinder head surface.
   If the cylinder head height is not within specification, replace it.

   Height:
   91.95—92.05 mm (3.620—3.624 in)
   Grinding limit: 0.20 mm (0.008 in) max.

   Note
   Before grinding the cylinder head, first check the following. Replace if necessary.
   - **Sinking of valve seat**
   - **Damage of manifold contact surface**
   - **Camshaft oil clearance and end play**

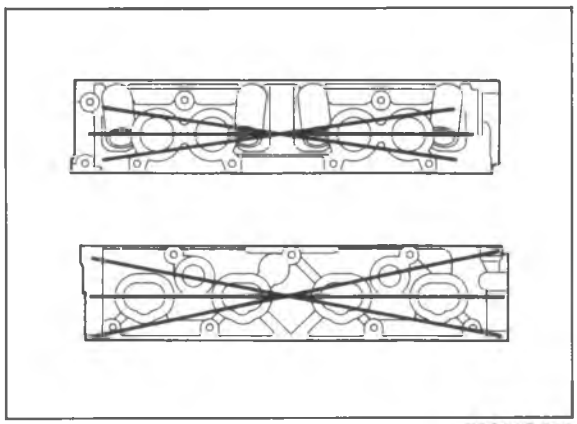

79G01C-053

4. Measure the manifold contact surface distortion in the six directions shown in the figure.

   Distortion: 0.15 mm (0.006 in) max.

5. If distortion exceeds specification grind the surface or replace the cylinder head.

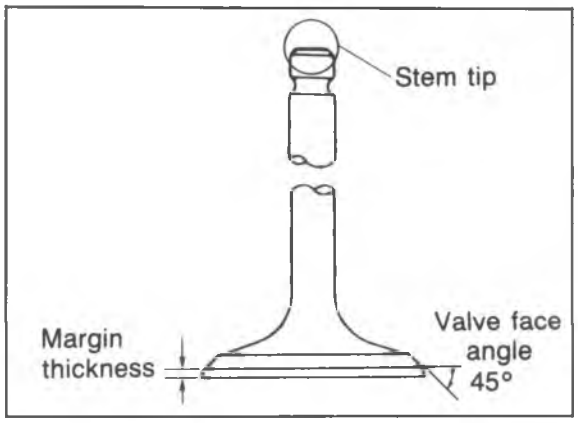

86U01X-078

Valve and Valve Guide

1. Inspect each valve for the following. Replace or resurface if necessary.
   (1) Damaged or bent stem
   (2) Roughness or damage to face
   (3) Damage or uneven wear of stem tip
2. Check the valve head margin thickness. Replace if necessary

   Margin thickness
   IN : 0.5 mm (0.020 in) min.
   EX: 1.0 mm (0.039 in) min.

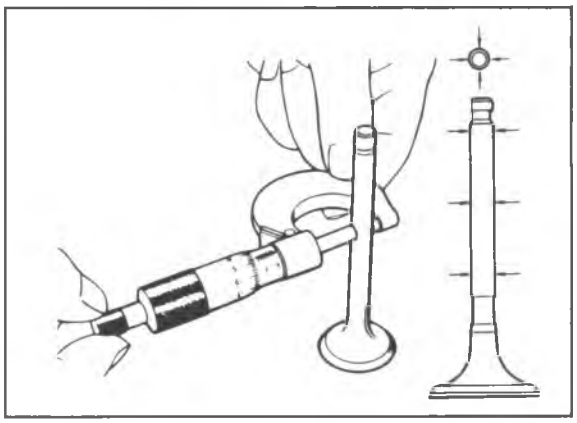
86U01X-079

3. Measure the valve length.

   Length
   IN : 115.81 mm (4.5594 in)
   EX: 116.21 mm (4.5752 in)

4. Measure the valve stem diameter.

   Diameter
   IN : 6.970—6.985 mm (0.2744—0.2750 in)
   EX: 6.965—6.980 mm (0.2742—0.2748 in)

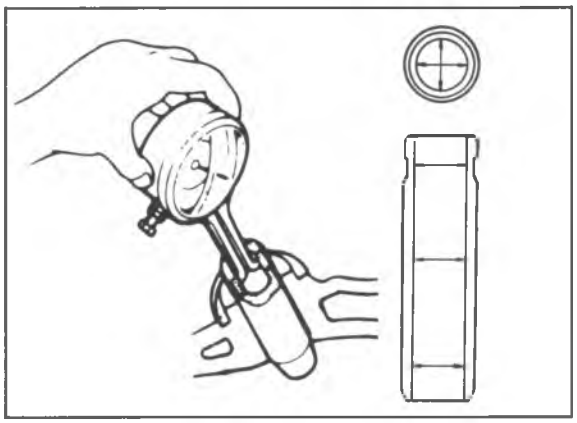
86U01X-080

5. Measure the valve guide inner diameter.

   Inner diameter
   IN : 7.01—7.03 mm (0.2760—0.2768 in)
   EX: 7.01—7.03 mm (0.2760—0.2768 in)

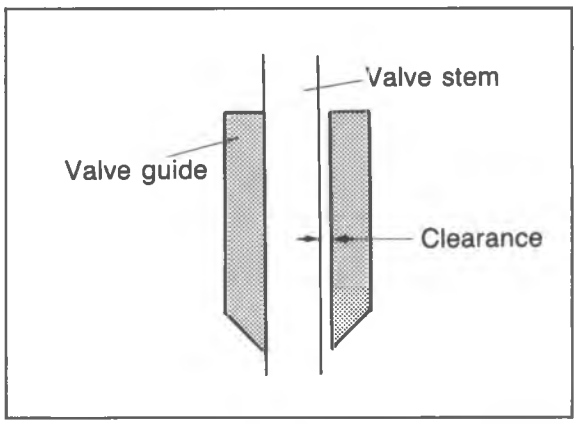

86U01X-081

6. Measure the valve stem to guide clearance.
   (1) Method No. 1
   Subtract the outer diameter of the valve stem from the inner diameter of the corresponding valve guide.

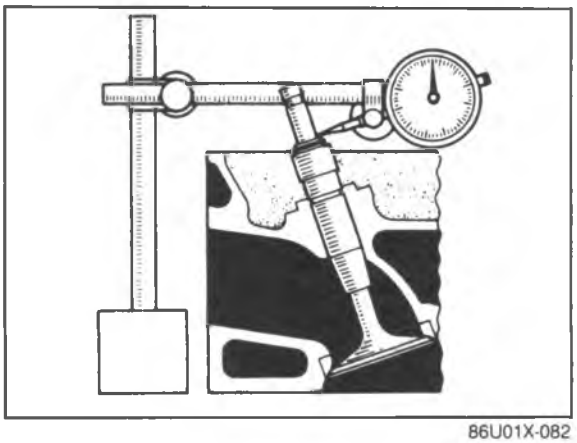

86U01X-082

(2) Method No. 2
Measure the valve stem play at a point close to the valve guide with the valve lifted slightly off the valve seat.

Clearance
IN : 0.025—0.060 mm (0.0010—0.0024 in)
EX: 0.030—0.065 mm (0.0012—0.0026 in)
Maximum: 0.20 mm (0.0079 in)

7. If the clearance exceeds the maximum, replace the valve and/or valve guide.

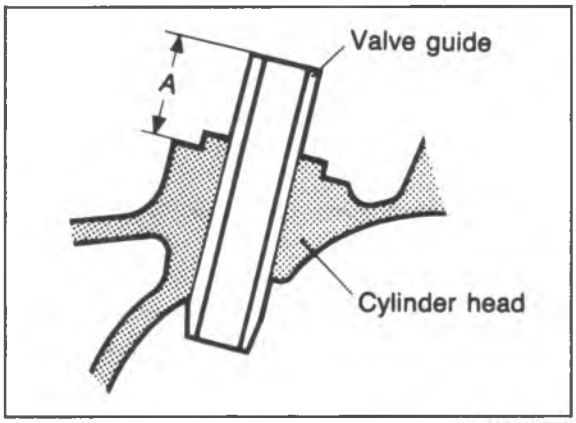

86U01X-086

8. Check that the valve guide protrusion height (dimension A in the figure) is as specified. Replace if necessary.

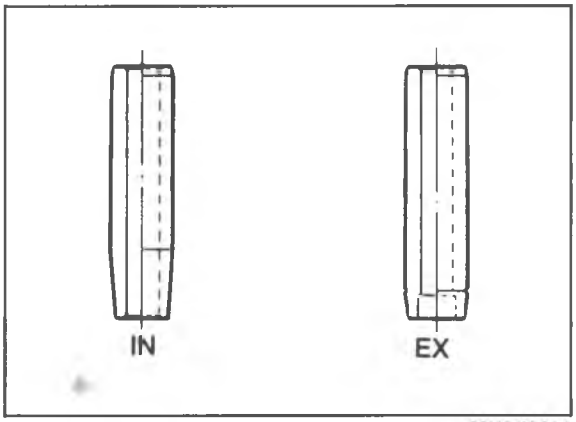

86U01X-214

Replacement of valve guide

Note
Although the shapes of the intake and exhaust valve guides are different, use the exhaust valve guide on both sides as a replacement.

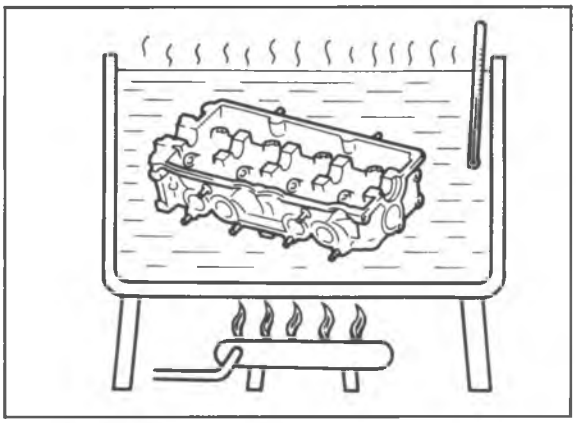

86U01X-083

Removal
1. Gradually heat the cylinder head in water to **approx. 90°C (190°F)**.

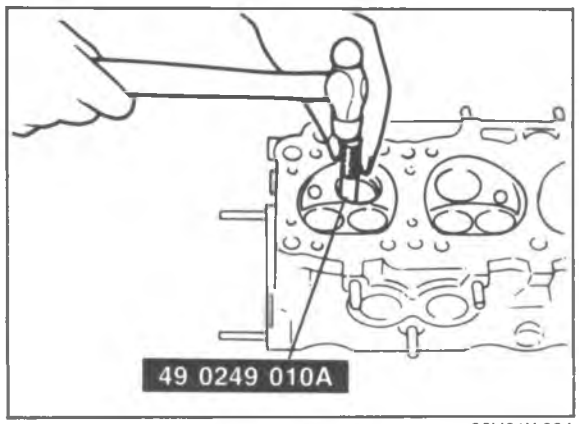

86U01X-084

2. Remove the valve guide from the side opposite the combustion chamber with the **SST**.

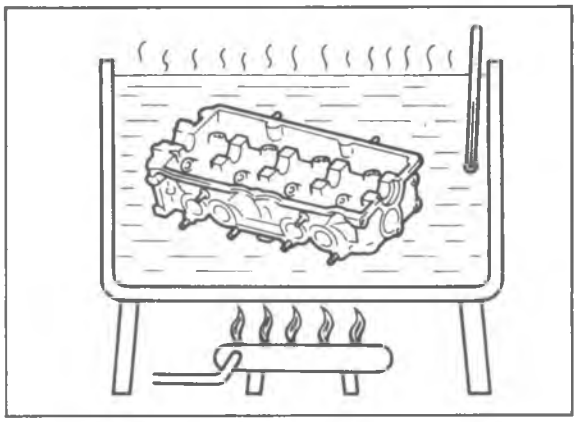

86U01X-085

Installation
1. Gradually heat the cylinder head in water to **approx. 90°C (190°F)**.
2. Tap the valve guide in from the side opposite the combustion chamber with the **SST** until the protrusion height is as specified.

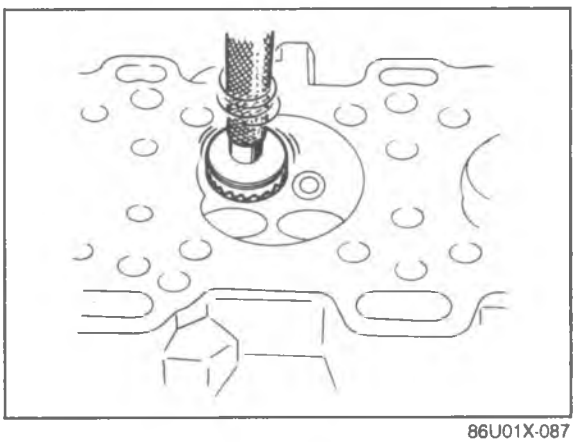

86U01X-087

Valve Seat
1. Inspect the contact surface of the valve seat and valve face for the following.
   (1) Roughness
   (2) Damage
2. If necessary, resurface the valve seat with a **45°** valve seat cutter and/or resurface the valve face.

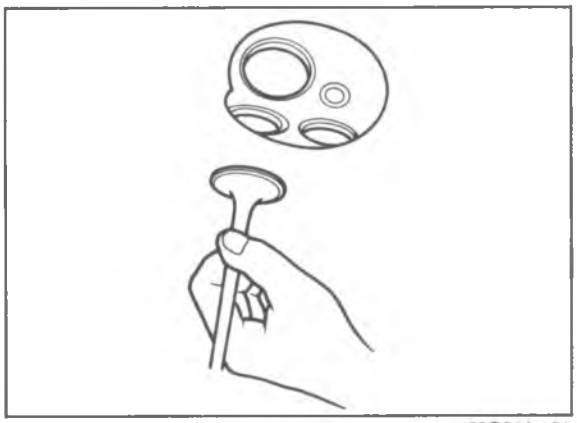

69G01A-101

3. Apply a thin coat of prussian blue to the valve face.
4. Check the valve seating by rotating the valve against the seat.
   (1) If blue does not appear 360° around the valve face, replace the valve.
   (2) If blue does not appear 360° around the valve seat, resurface the seat.

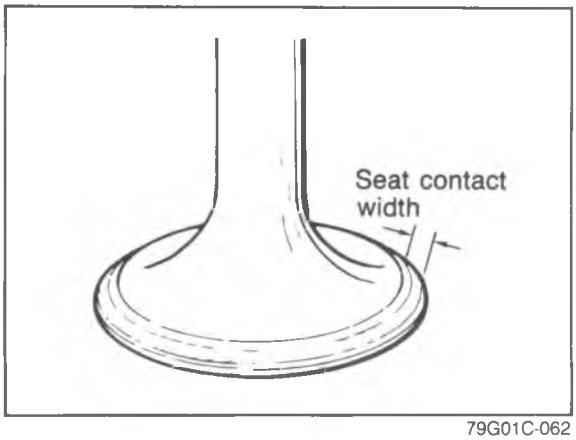

79G01C-062

5. Check the seat contact width.

Width:
1.2—1.6 mm (0.047—0.063 in)

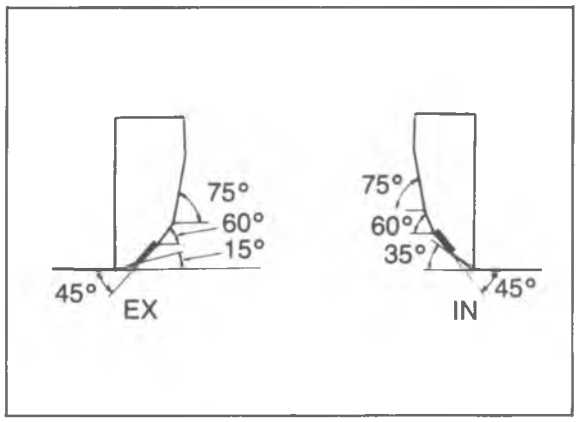

86U01X-088

6. Check that the valve seating position is at the center of the valve face.
   (1) If the seating position is too high, correct the valve seat with a **60°** cutter and a **45°** cutter.
   (2) If the seating position is too low, correct the valve seat with a **35° (IN)** or **15° (EX)** cutter and a **45°** cutter.
7. Seat the valve to the valve seat with a lapping compound.

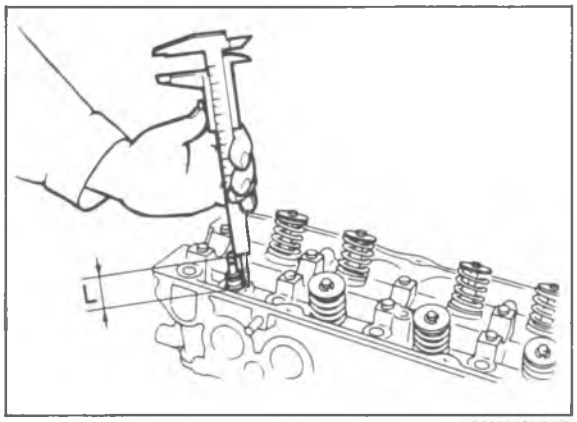

86U01X-089

8. Check the sinking of the valve seat.
   Measure protruding length (dimension L) of each valve stem.

   Dimension L: 50.2 mm (1.976 in)

   (1) If **L** is as below, it can be used as it is.
   50. 2—51.0 mm (1.976—2.008 in)

   (2) If **L** is as below, insert a spacer between the spring seat and cylinder head to adjust.
   51.0—51.7 mm (2.008—2.035 in)

   (3) If **L** is more than as below, replace the cylinder head.
   51.7 mm or more

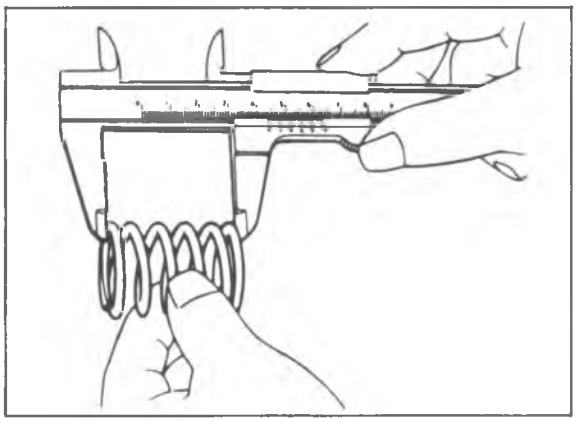

86U01X-090

Valve Spring

1. Inspect each valve spring for cracks or damage.
2. Check the free length and angle. Replace if necessary.

Free length
IN Standard: 49.5 mm (1.949 in)
Minimum: 48.3 mm (1.902 in)
EX Standard: 50.4 mm (1.984 in)
Minimum: 49.2 mm (1.937 in)

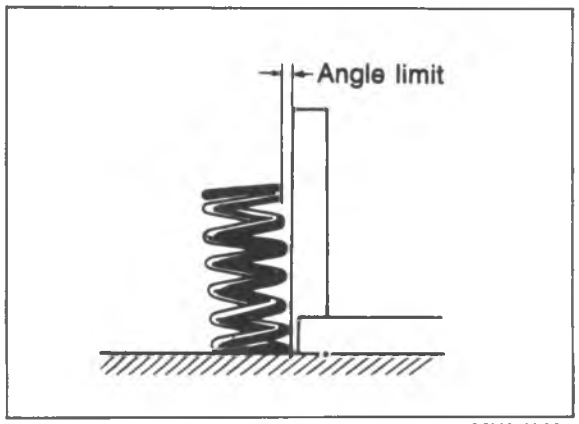

86U01X-091

Angle: 1.7 mm (0.067 in) max.

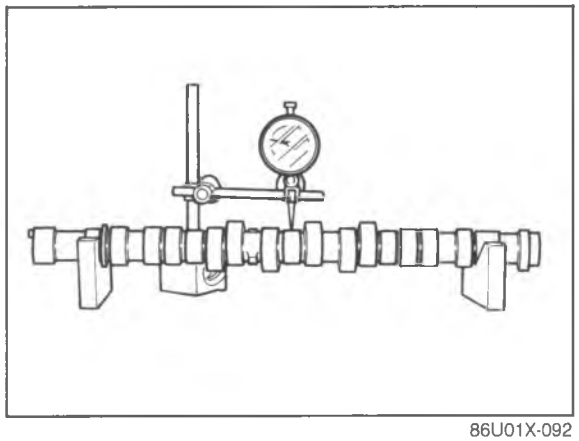

86U01X-092

Camshaft

1. Set the front and rear journals on V-blocks. Check the camshaft runout. Replace if necessary.

   Runout: 0.03 mm (0.0012 in) max.

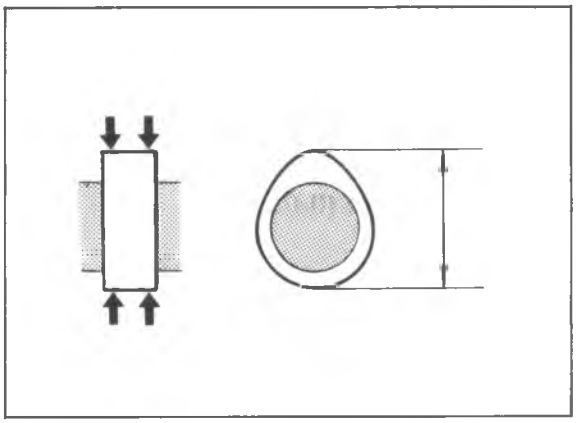

86U01X-093

2. Check the cam for wear or damage. Replace if necessary.
3. Check the cam lobe height at the two points as shown in the figure.

   Height
   IN : 41.29—41.39 mm (1.626—1.630 in)
   EX: 41.80—41.90 mm (1.646—1.650 in)
   Minimum
   IN : 41.14 mm (1.620 in)
   EX: 41.65 mm (1.640 in)

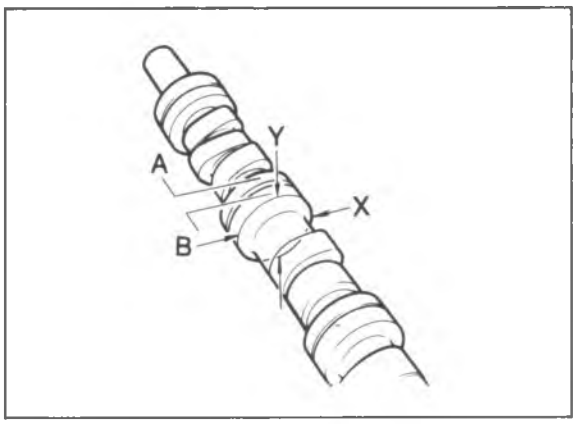

86U01X-094

4. Measure wear of the journals in X and Y directions at the two points as shown in the figure.

   Diameter
   Front and rear:
   31.940—31.965 mm (1.2575—1.2585 in)
   Center three journals:
   31.910—31.935 mm (1.2563—1.2573 in)

   Out-of-round: 0.05 mm (0.002 in) max.

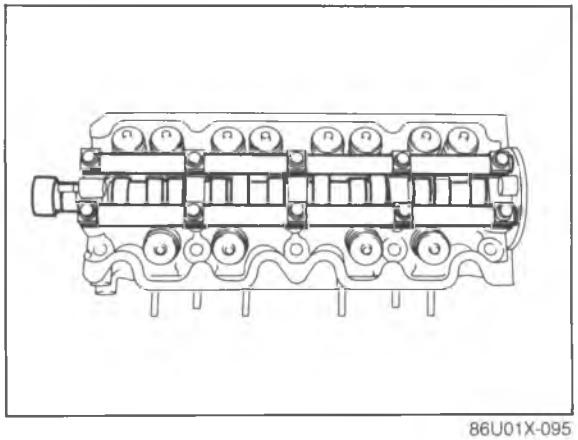

86U01X-095

5. Measure the oil clearance of the camshaft and camshaft caps.
   (1) Remove any oil, or dirt from the journals and bearing surface.
   (2) Set the camshaft onto the cylinder head.
   (3) Position plasti-gauge on top of the journals in the axial direction.
   (4) Place the camshaft caps and rocker arm shafts in position, and tighten them to the specified torque.

   Tightening torque:
   18—26 N·m (1.8—2.7 m-kg, 13—20 ft-lb)

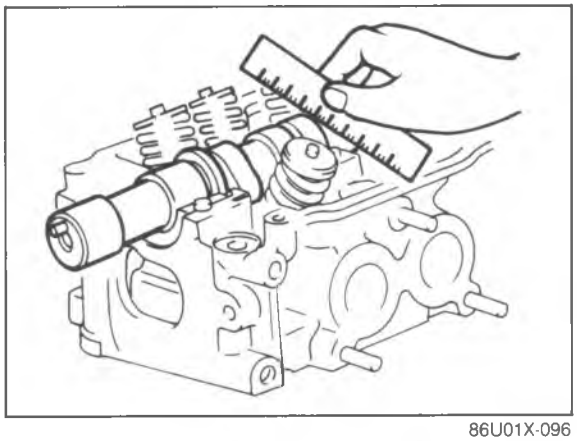

86U01X-096

   (5) Remove the camshaft caps and measure the oil clearance at each cap.

   Oil clearance
   Front and rear:
   0.035—0.085 mm (0.0014—0.0033 in)
   Center three journals:
   0.065—0.115 mm (0.0026—0.0045 in)
   Maximum: 0.15 mm (0.0059 in)

   (6) If the oil clearance exceeds the maximum, replace the cylinder head.

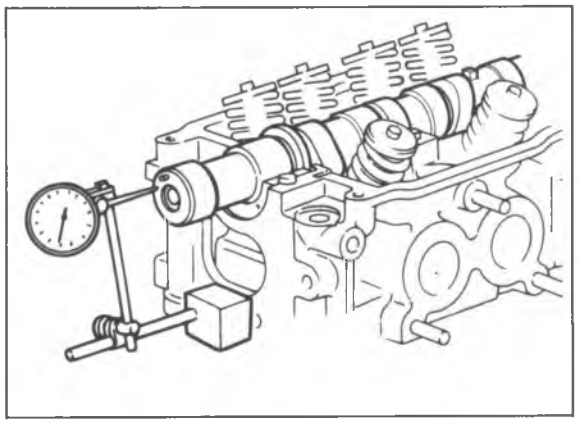

86U01X-097

6. Measure the camshaft end play. If it exceeds the maximum, replace the camshaft and/or the cylinder head.

   End play:
   0.08—0.16 mm (0.003—0.006 in)
   Maximum: 0.20 mm (0.008 in)

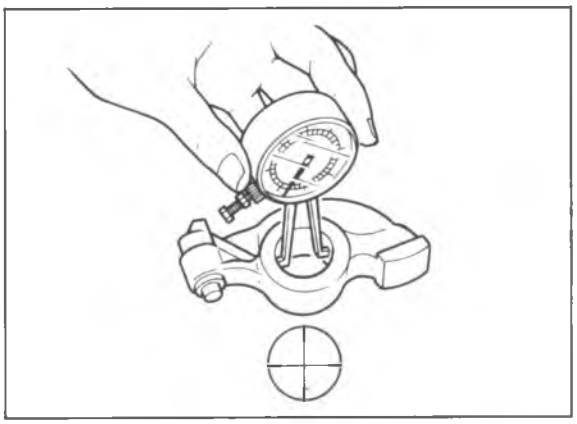

86U01X-098

Rocker Arm and Rocker Arm Shaft

1. Check for wear or damage to the contact surface of the rocker arm shaft and the rocker arm. Replace if necessary.
2. Check the oil clearance between the rocker arm and shaft. Replace if necessary.
   (1) Measure the rocker arm inner diameter.

   Diameter:
   19.000—19.033 mm (0.7480—0.7493 in)

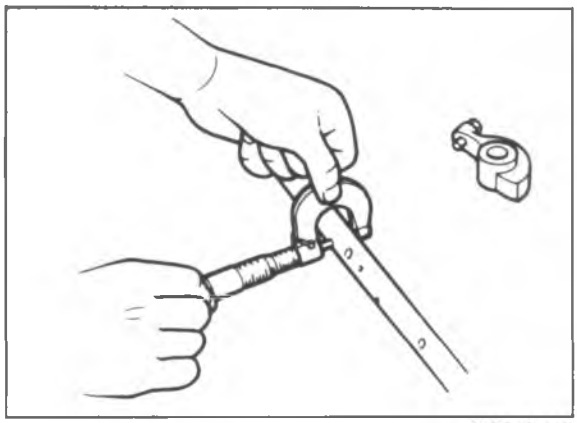

69G01A-115

(2) Measure the rocker arm shaft diameter.

Diameter:
18.959—18.980 mm (0.7464—0.7472 in)

(3) Subtract the shaft diameter from the rocker arm diameter.

Oil clearance:
0.020—0.074 mm (0.0008—0.0029 in)
Maximum: 0.10 mm (0.0039 in)

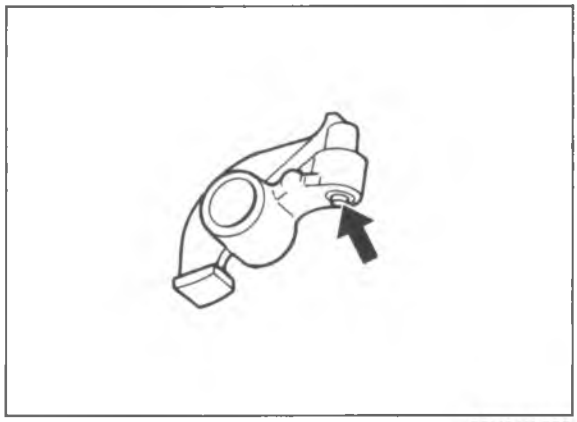

86U01X-099

Hydraulic Lash Adjuster (HLA)
Check the HLA face for wear or damage. Replace if necessary.

Caution
Do not remove the HLA unless necessary to prevent damaging the O-ring.

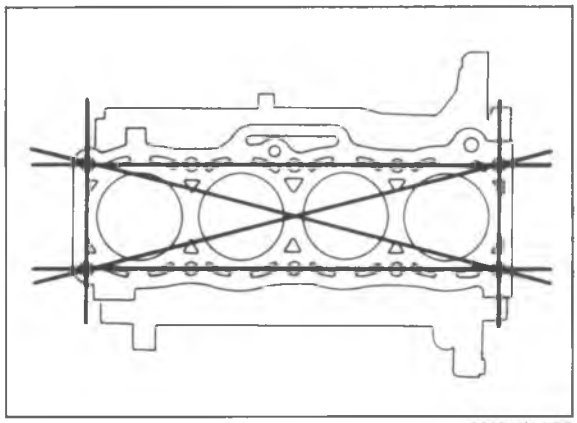

86U01X-100

Cylinder Block
1. Check the cylinder block. Repair or replace if necessary.
   (1) Leakage damage
   (2) Cracks
   (3) Scoring of wall
2. Measure the distortion of the top surface of the cylinder block in the six directions as shown in the figure.

   Distortion: 0.15 mm (0.006 in) max.

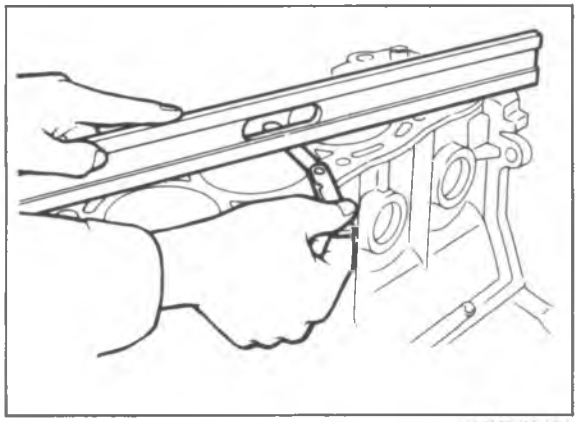

86U01X-101

3. If the distortion exceeds the maximum, repair by grinding, or replace the cylinder block.

   Grinding limit: 0.20 mm (0.008 in) max.

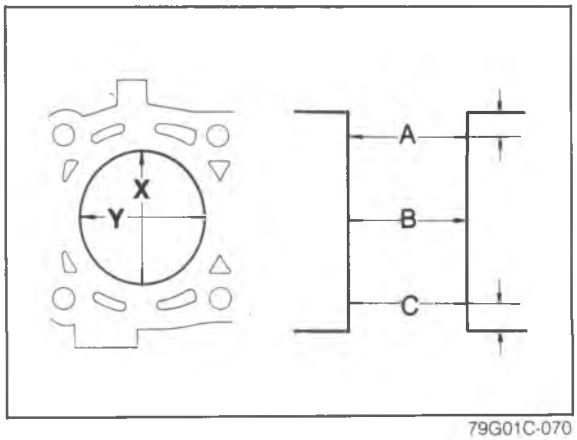

79G01C-070

4. Measure the cylinder bore in directions X and Y at three levels in each cylinder as shown.

Cylinder bore mm (in)

Size	Bore
Standard	86.000—86.019 (3.3858—3.3866)
0.25 (0.010) oversize	86.250—86.269 (3.3957—3.3964)
0.50 (0.020) oversize	86.500—86.519 (3.4055—3.4063)

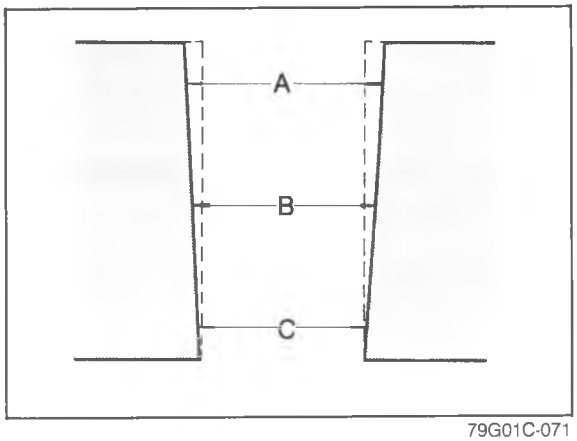

79G01C-071

(1) If the difference between the measurement A and C exceeds the maximum taper, rebore the cylinder to oversize.

Taper: 0.019 mm (0.0007 in) max.

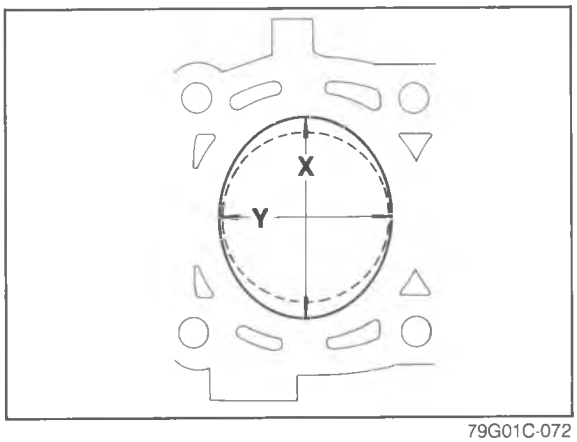

79G01C-072

(2) If the difference between the measurement X and Y exceeds the maximum out-of-round, rebore the cylinder to oversize.

Out-of-round: 0.019 mm (0.0007 in) max.

Caution
The boring size should be based on the size of an oversize piston and be the same for all cylinders.

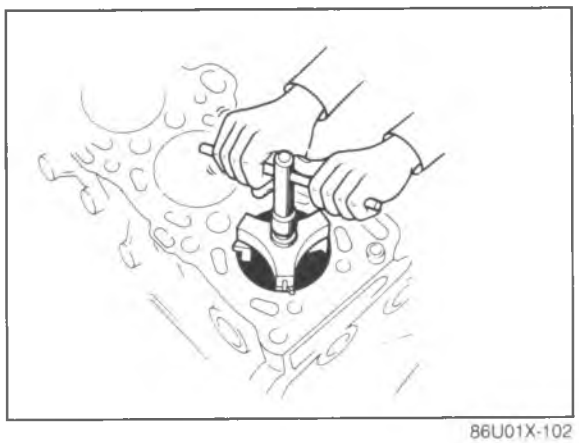
86U01X-102

5. If the upper part of the cylinder wall shows uneven wear, remove the ridge with a ridge reamer.

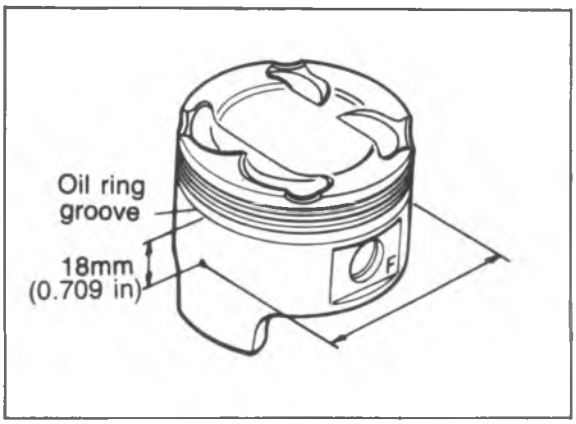

79G01C-073

Piston

1. Inspect the outer circumferences of all pistons for seizure or scoring. Replace if necessary.
2. Measure the outer diameter of each piston at a right angle (**90°**) to the piston pin, **18 mm (0.709 in) below** the oil ring land lower edge.

Piston diameter mm (in)

Size	Diameter
Standard	85.944—85.964 (3.3836—3.3844)
0.25 (0.010) oversize	86.194—86.214 (3.3935—3.3942)
0.50 (0.020) oversize	86.444—86.464 (3.4033—3.4041)

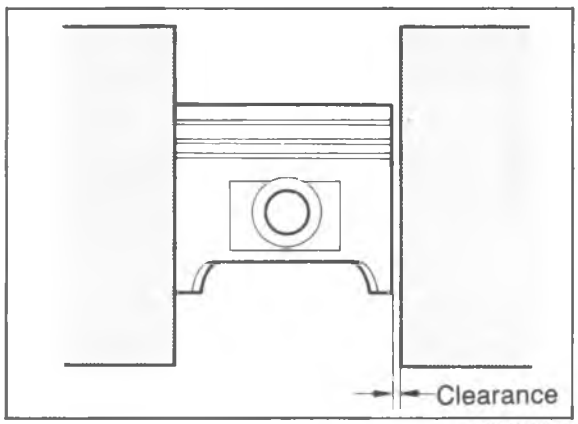

86U01X-103

3. Check the piston to cylinder clearance.

   Clearance:
   0.036—0.075 mm (0.0014—0.0030 in)
   Maximum: 0.15 mm (0.0059 in)

4. If the clearance exceeds the maximum, replace the piston or rebore the cylinders to fit oversize pistons.

   Note
   If the piston is replaced, replace the piston rings also.

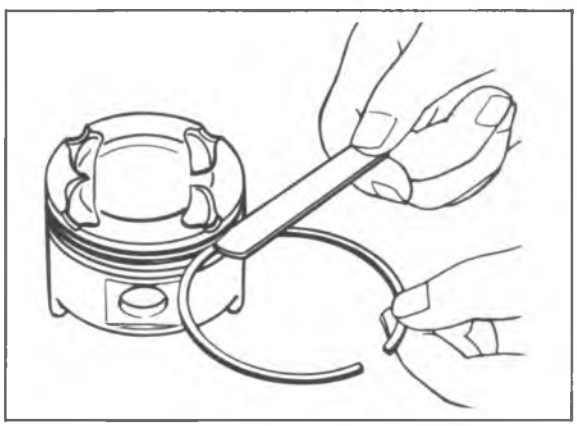

69G01A-125

Piston and Piston Ring

1. Measure the piston ring to ring land clearance around the entire circumference using a new piston ring.

   Clearance (Top and Second):
   0.03—0.07 mm (0.001—0.003 in)
   Maximum: 0.15 mm (0.006 in)

2. If the clearance exceeds the maximum, replace the piston.

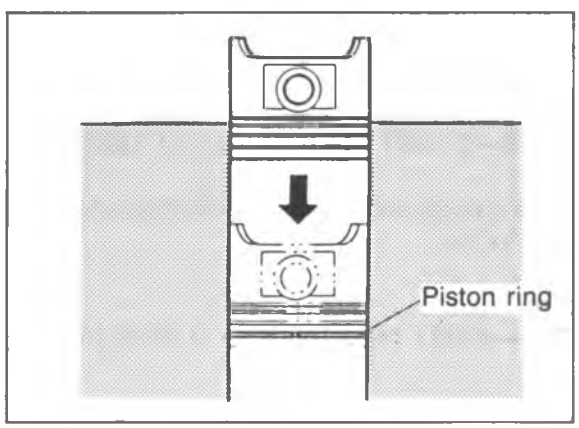

86U01X-104

3. Inspect the piston rings for damage, abnormal wear, or breakage. Replace if necessary.
4. Insert the piston ring into the cylinder by hand and push it to the bottom of the ring travel in using the piston.

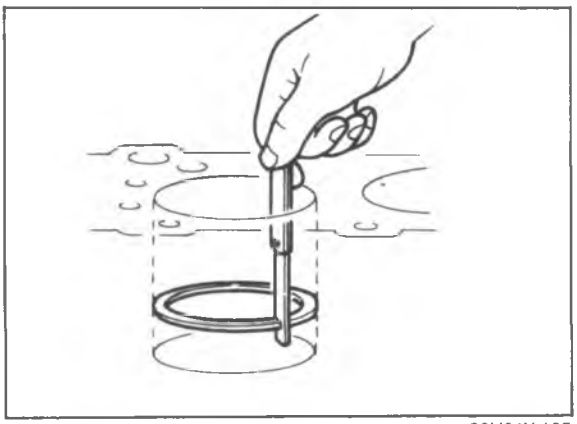

86U01X-105

5. Measure each piston ring end gap with a feeler gauge. Replace if necessary.

End gap
Top : 0.20—0.35 mm (0.008—0.014 in)
Second: 0.15—0.30 mm (0.006—0.012 in)
Oil rail Turbo : 0.20—0.70 mm
: (0.008—0.028 in)
Non-Turbo: 0.30—0.90 mm
: (0.012—0.035 in)
Maximum: 1.0 mm (0.039 in)

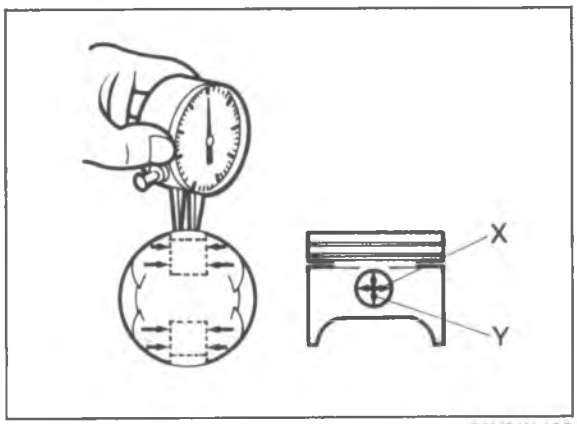

86U01X-106

Piston and Piston Pin

1. Measure the piston pin hole diameter in X and Y directions at four points.

Diameter:
21.988—21.998 mm (0.8657—0.8661 in)

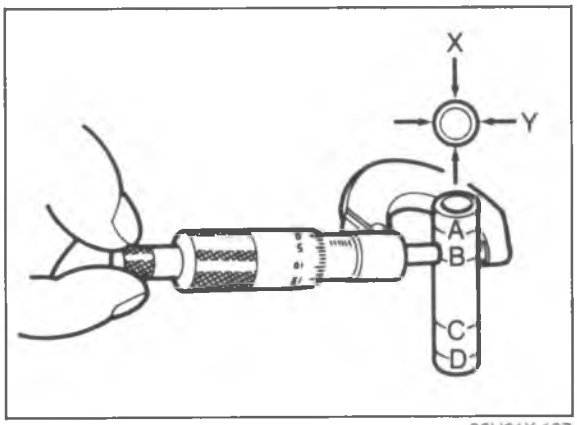

86U01X-107

2. Measure the piston pin diameter.

Diameter:
21.974—21.980 mm (0.8651—0.8654 in)

3. Determine the piston pin to piston clearance by subtracting the two figures.

Clearance:
0.008—0.024 mm (0.0003—0.0009 in)

4. If the clearance exceeds the specification, replace the piston and/or piston pin.

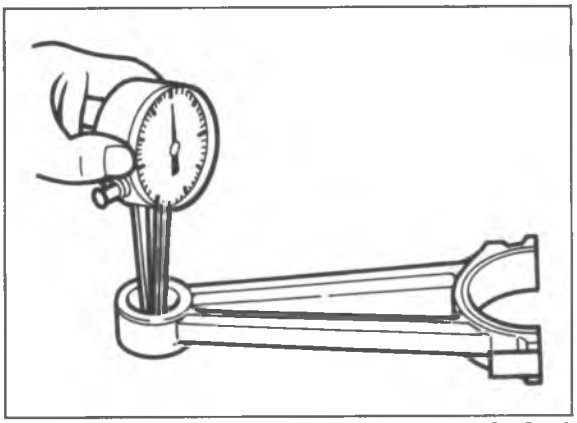

79G01C-076

Connecting Rod

1. Measure the connecting rod small end bore.

Diameter:
21.943—21.961 mm (0.8640—0.8646 in)

2. Check the interference between the small end bore and piston pin.

Interference:
0.013—0.037 mm (0.0005—0.0015 in)

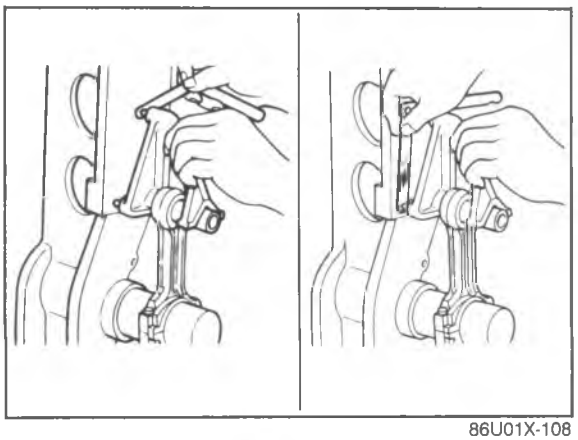

86U01X-108

3. Check each connecting rod for bending or twisting. Repair or replace if necessary.

Bend : 0.06 mm (0.0024 in) max.
Twist: 0.06 mm (0.0024 in) max.

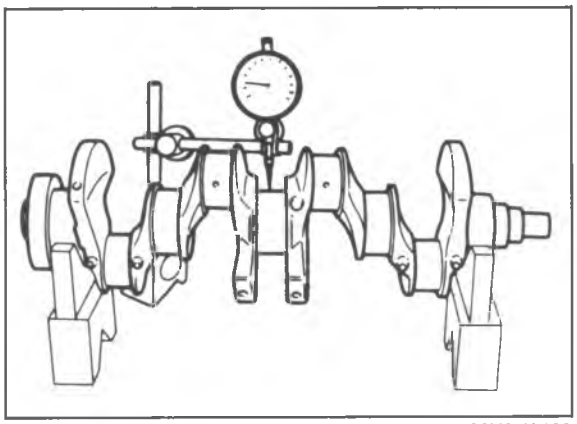

86U01X-109

Crankshaft

1. Check the journals and pins for damage, scoring, or oil hole clogging.
2. Set the crankshaft on V-blocks.
3. Check the crankshaft runout at the center journal. Replace if necessary.

Runout: 0.03 mm (0.0012 in) max.

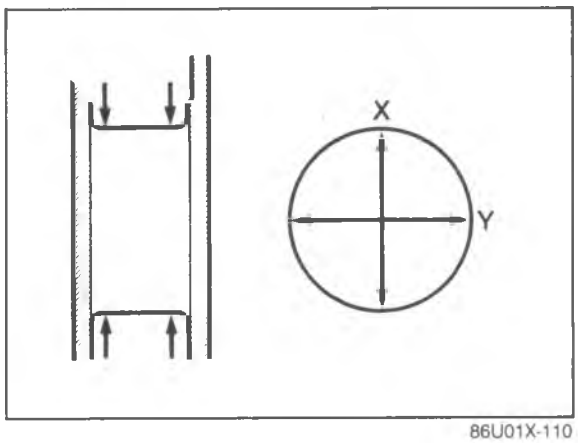

86U01X-110

4. Measure each journal diameter in X and Y directions at two points.

Main journal
Diameter:
59.937—59.955 mm (2.3597—2.3604 in)
Minimum: 59.89 mm (2.358 in)
Out-of-round: 0.05 mm (0.0020 in) max.

Crank pin journal
Diameter:
50.940—50.955 mm (2.0055—2.0061 in)
Minimum: 50.89 mm (2.004 in)
Out-of-round: 0.05 mm (0.0020 in) max.

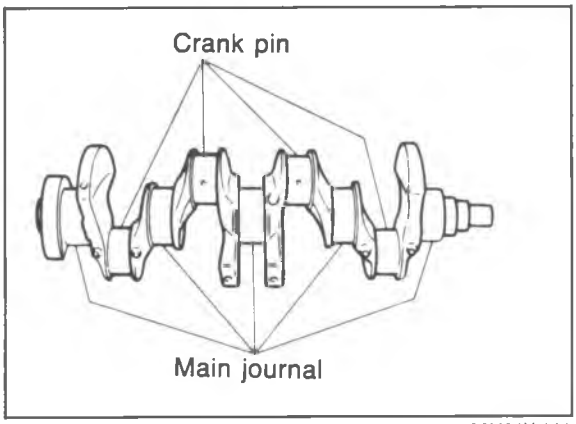

86U01X-111

5. If the diameter is less than the minimum, grind the journals to match undersize bearings.

Undersize bearing: 0.25 mm (0.010 in), 0.50 mm (0.020 in), 0.75 mm (0.030)

Main journal diameter undersize mm (in)

Bearing size		Journal diameter
0.25 undersize	No.1,2,4,5	59.693—59.711 (2.3501—2.3508)
	No.3	59.687—59.705 (2.3499—2.3506)
0.50 undersize	No.1,2,4,5	59.443—59.461 (2.3403—2.3410)
	No.3	59.437—59.455 (2.3400—2.3407)
0.75 undersize	No.1,2,4,5	59.193—59.211 (2.3304—2.3311)
	No.3	59.187—59.205 (2.3302—2.3309)

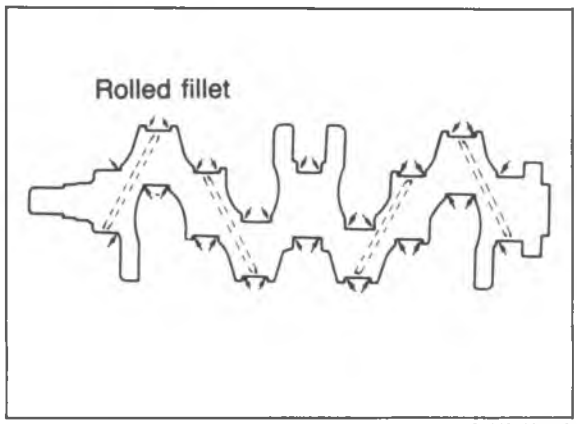

86U01X-112

Crank pin journal diameter undersize mm (in)

Bearing size	Journal diameter
0.25 undersize	50.690—50.705 (1.9957—1.9963)
0.50 undersize	50.440—50.455 (1.9858—1.9864)
0.75 undersize	50.190—50.205 (1.9760—1.9766)

Caution
Do not grind the rolled fillet area.

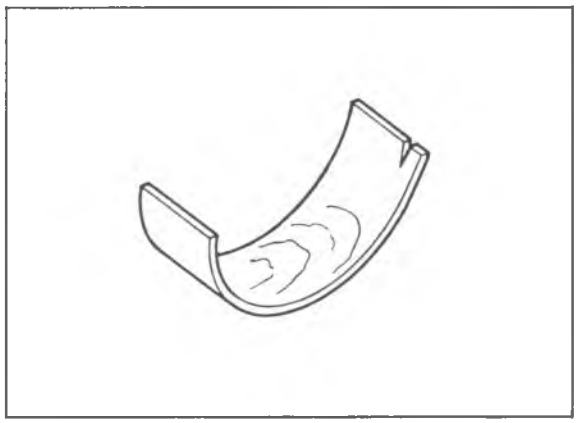

79G01C-077

Main Bearing and Connecting Rod Bearing
Check the main bearings and the connecting rod bearings for peeling, scoring, or other damage.

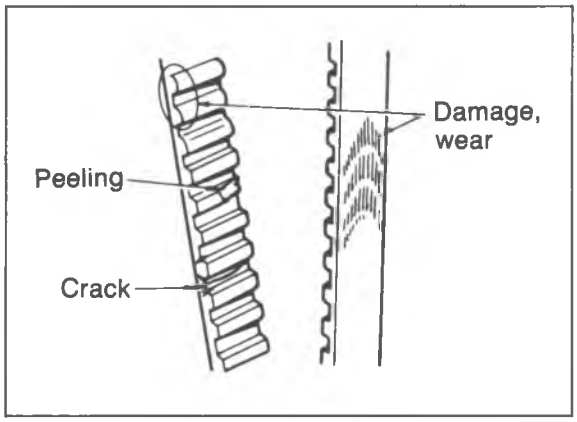

86U01X-113

Timing Belt
1. Replace the timing belt if there is any oil or grease on it.
2. Check the timing belt for damage, wear, peeling, cracks, or hardening. Replace if necessary.

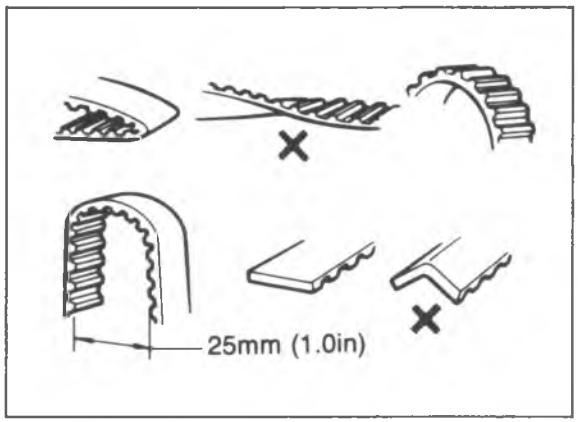

86U01X-114

Caution
a) Never forcefully twist turn inside out, or bend the timing belt.
b) Be careful not to allow oil or grease on the belt.

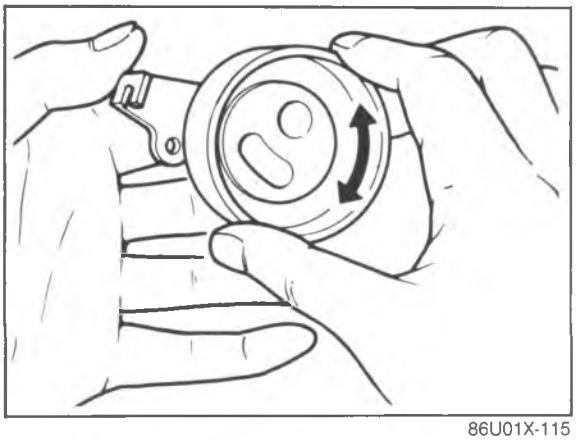

86U01X-115

Timing Belt Tensioner and Idler Pulley
Check the timing belt tensioner and idler pulley for smooth rotation and abnormal noise. Replace if necessary.

Caution
Do not clean the tensioner with cleaning fluids. If necessary, use a soft rag to wipe it clean, and avoid scratching it.

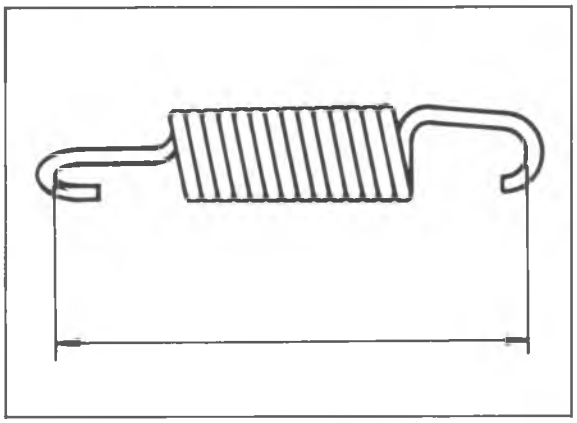

86U01X-116

Timing Belt Tensioner Spring
Check the free length of the tensioner spring. Replace if necessary.

Free length:
61.1 mm (2.406 in)

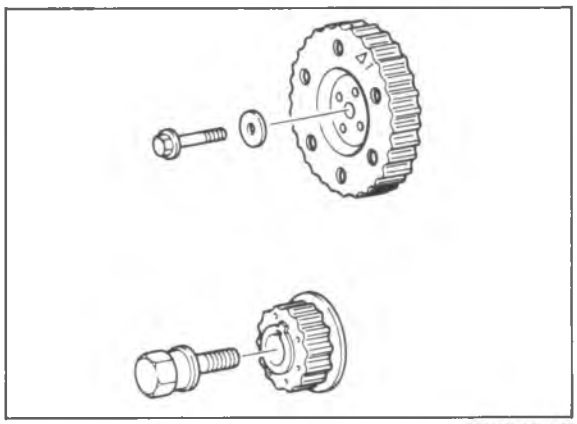

86U01X-117

Timing Belt Pulley and Camshaft Pulley
Inspect the pulley teeth for wear, deformation, or other damage. Replace if necessary.

Caution
Do not clean the pulley with cleaning fluids. If necessary, use a rag to wipe it clean.

Timing Belt Cover (lower and upper)
Inspect the timing belt covers for damage or cracks. Replace if necessary.

ASSEMBLY

1. Clean all parts before reinstallation.
2. Apply new engine oil to all sliding and rotating parts.
3. Replace plain bearings if they are peeling, burned, or otherwise damaged.
4. Tighten all bolts and nuts to the specified torques.

Caution
Do not reuse gaskets or oil seals.

CYLINDER BLOCK—I
Torque Specifications

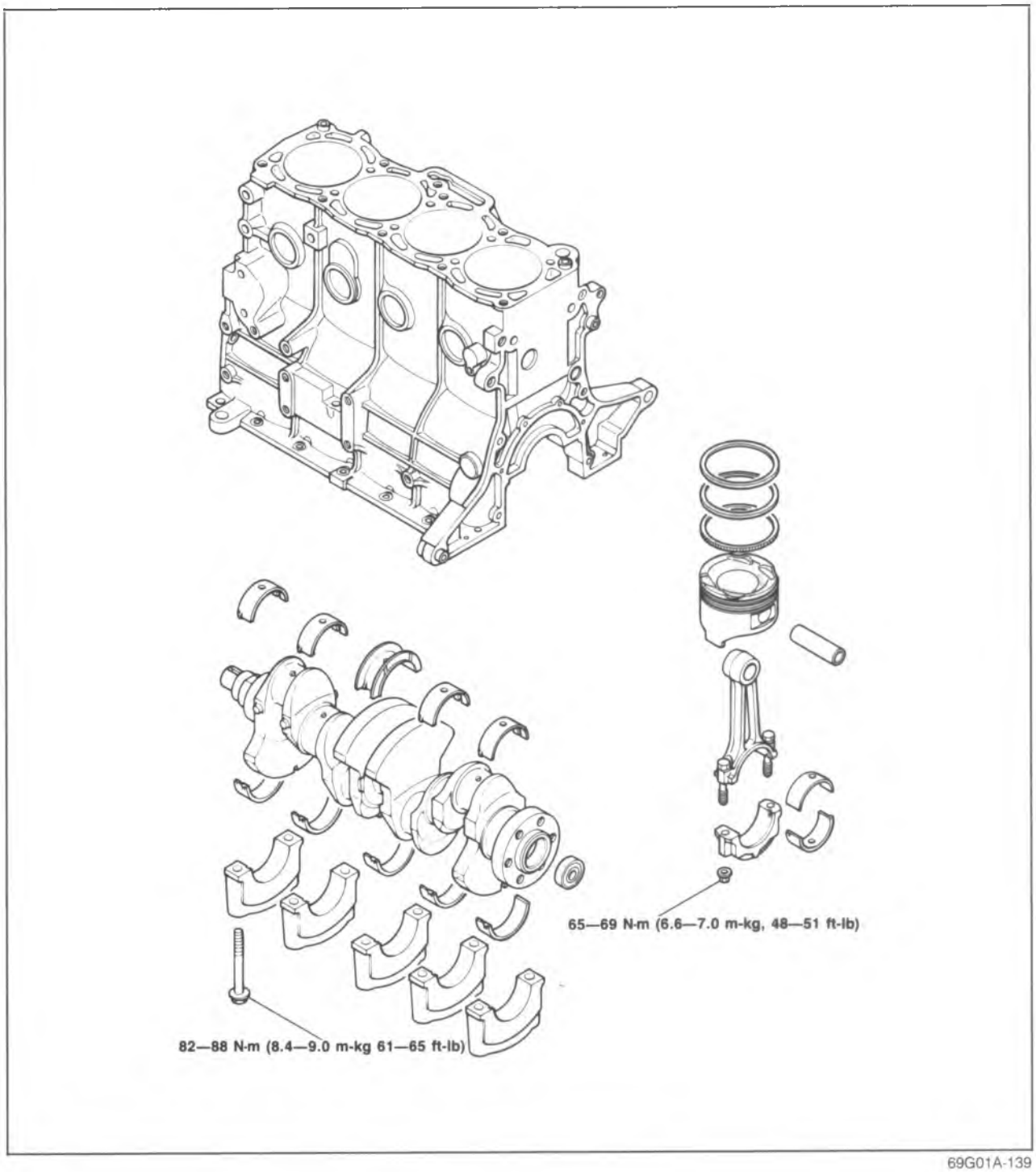

69G01A-139

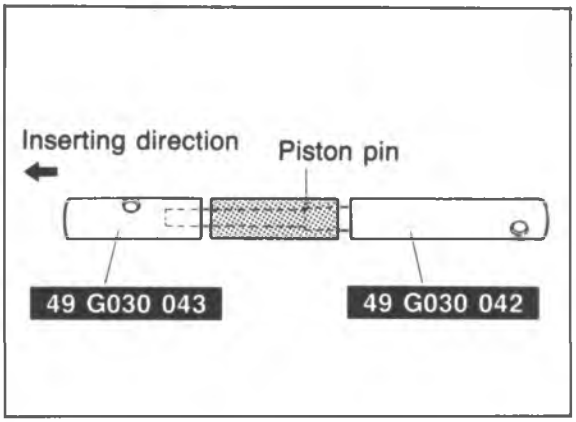

86U01X-118

Connecting Rod

1. Assemble the **SST** to the piston pin.
2. Apply engine oil to the piston pin.

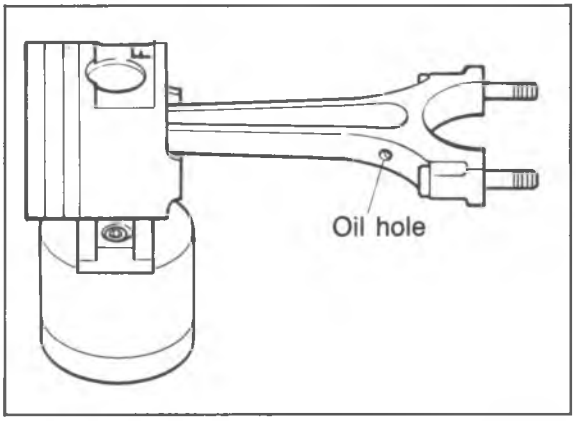

86U01X-119

3. Set the piston on the **SST** with the "**F**" mark facing upward.
4. Set the connecting rod in piston with the oil hole in the large end opposite the "**F**" mark.

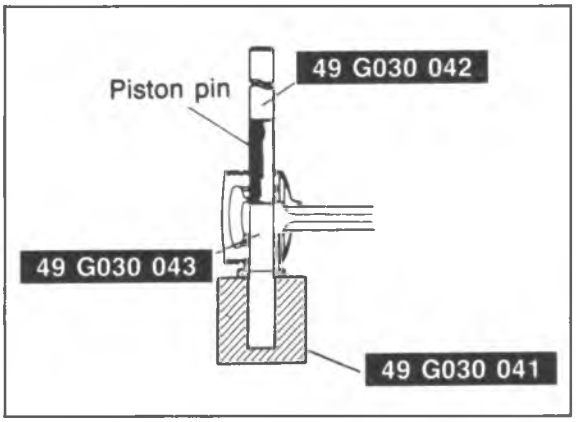

86U01X-120

5. Press the piston pin into the piston and connecting rod until the **SST** contacts the block.
6. While inserting the piston pin, check the pressure force. If it is less than specified, replace the piston pin or the connecting rod.

   Press force:
   5—15 kN (500—1,500 kg, 1,100—3,300 lb)

7. Check the oscillation torque of the connecting rod. (Refer to page 1—41.)

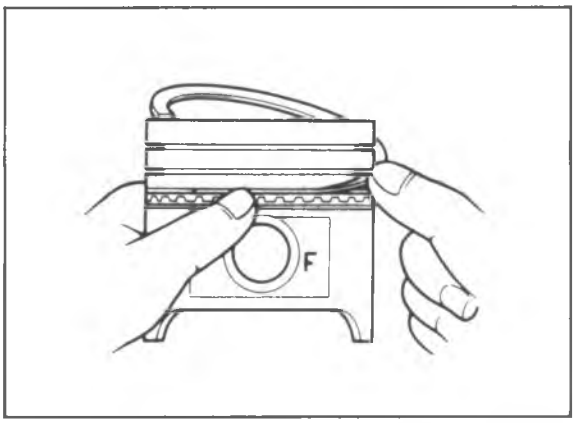

69G01A-144

Piston Ring

1. Install the three-piece oil rings on the pistons.
   (1) Apply engine oil to the oil ring spacer and rails.
   (2) Install the oil ring spacer so that the opening faces upward.
   (3) Install the upper rail and lower rail.

   Note
   a) The upper rail and lower rail are the same.
   b) Each rail can be installed with either face upward.

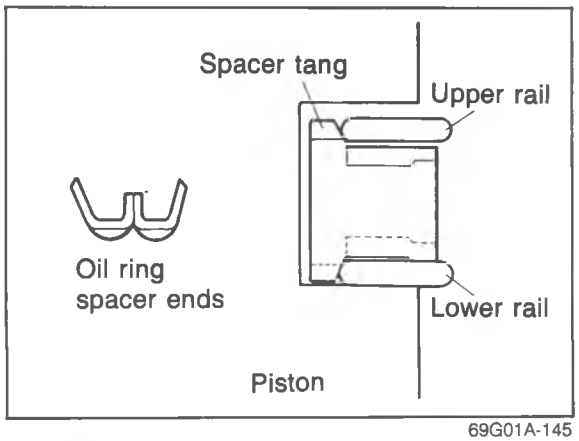

69G01A-145

2. Check that both rails are expanded by the spacer tangs as shown in the figure by checking that both rails turn smoothly in both directions.

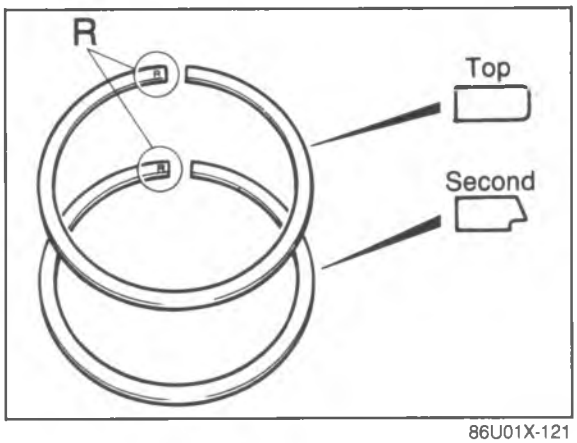

86U01X-121

3. Install the second ring to the piston first, then install the top ring. Use a piston ring expander.

Caution
The rings must be installed with the "R" marks facing upward.

4. Apply a liberal amount of clean engine oil to the second and top piston rings.

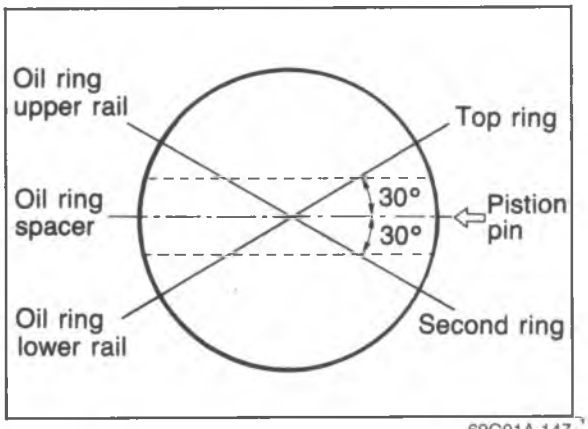

69G01A-147

5. Position the opening of each ring as shown in the figure.

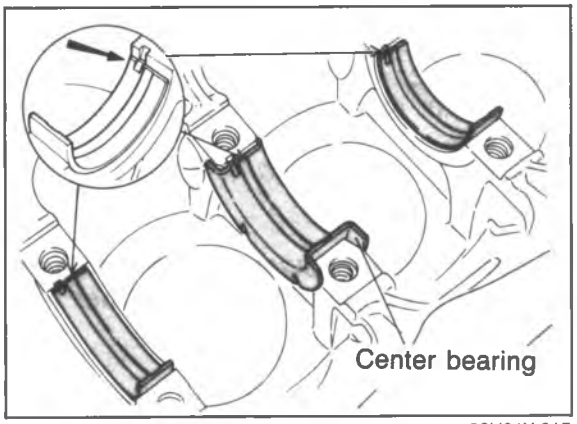

86U01X-215

Crankshaft

1. Before installing the crankshaft, inspect the main bearing oil clearances as described.

Note
The bearing with thrust shoulders is the center bearing in the cylinder block.

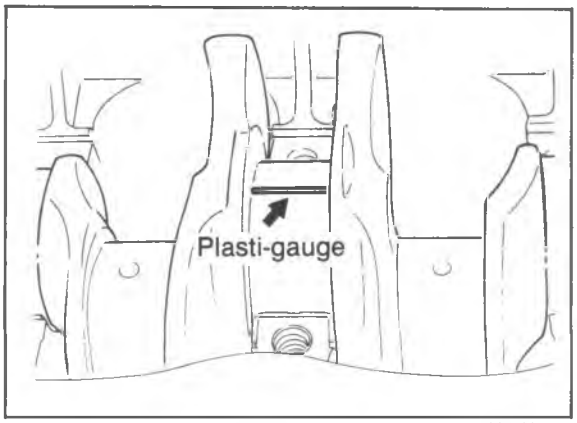

86U01X-122

Oil clearance inspection
(1) Remove any foreign material and oil from the journals and bearings.
(2) Install the upper main bearings in the cylinder block.
(3) Set the crankshaft into the cylinder block.
(4) Position the plasti-gauge on top of the journals in the axial direction.

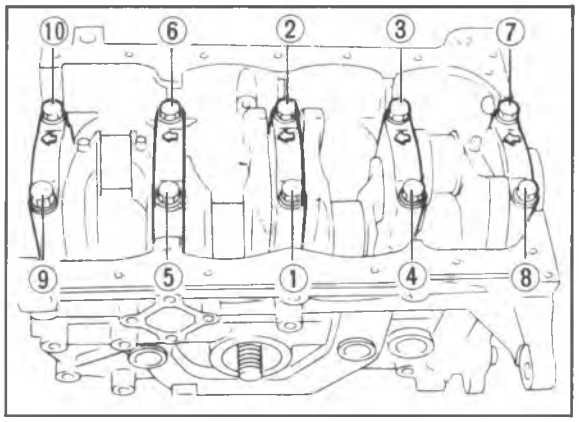

86U01X-123

(5) Install the main bearing caps along with the lower main bearings according to the cap number and ⬅ mark.
(6) Tighten the caps in two or three steps in the order in the figure.

Tightening torque:
82—88 N·m (8.4—9.0 m-kg, 61—65 ft-lb)

Caution
Do not rotate the crankshaft when measuring the oil clearances.

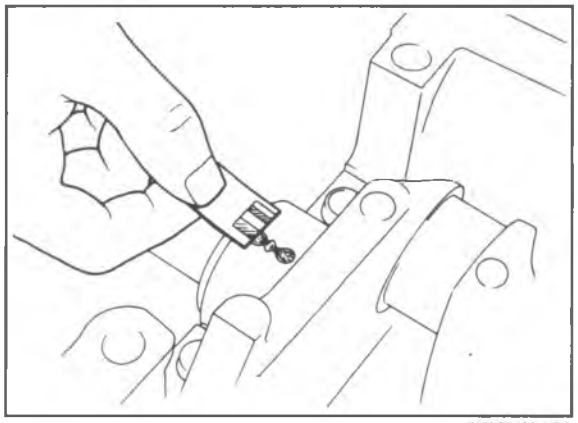
86U01X-124

(7) Remove the main bearing caps, and measure the plasti-gauge at each journal at the widest point for the smallest clearance, and at the narrowest point for the largest clearance.
If the oil clearance exceeds specification, grind the crankshaft and use undersize main bearings. (Refer to page 1—53.)

Oil clearance
No. 1, 2, 4, 5:
0.025—0.043 mm (0.0010—0.0017 in)
No. 3:
0.031—0.049 mm (0.0012—0.0019 in)
Maximum: 0.08 mm (0.0031 in)

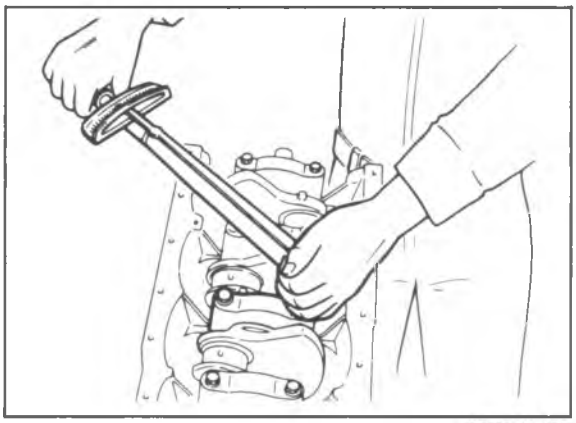
86U01X-125

2. Apply a liberal amount of engine oil to the main bearings and main journals.
3. Install the crankshaft and the main bearing caps according to the cap number and ⬅ mark.

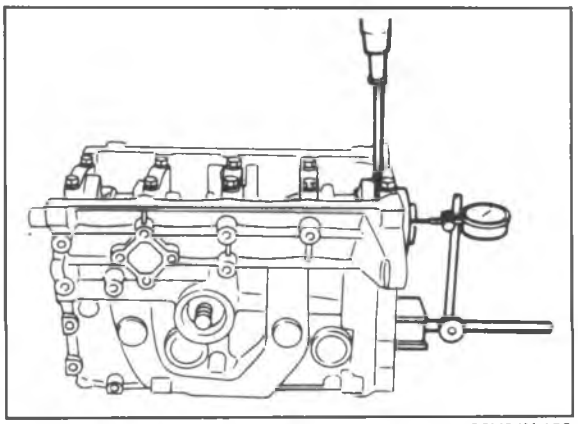

86U01X-126

4. Inspect the crankshaft end play.

End play:
0.08—0.18 mm (0.0031—0.0071 mm)
Maximum: 0.30 mm (0.012 in)

5. If the end play exceeds the maximum, grind the crankshaft (Refer to page 1—53) and install an undersize center main bearing. Or replace the crankshaft and main bearings.

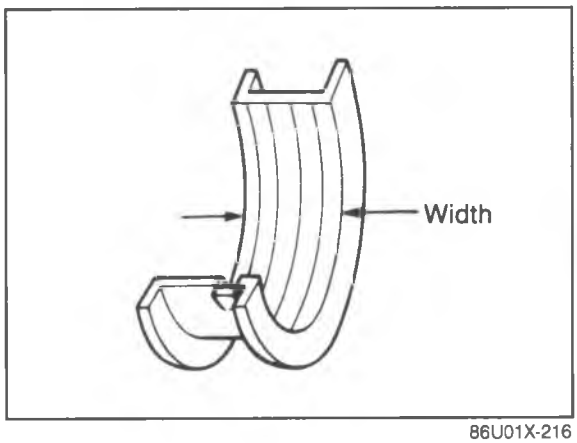

86U01X-216

Center main bearing width
Standard:
27.94—27.99 mm (1.1000—1.1020 in)
0.25 mm (0.010 in) undersize:
28.04—28.09 mm (1.1040—1.1059 in)
0.50 mm (0.020 in) undersize:
28.12—28.17 mm (1.1071—1.1091 in)
0.75 mm (0.030 in) undersize:
28.20—28.25 mm (1.1102—1.1122 in)

Note
Wider thrust width is available only in undersize center main bearing

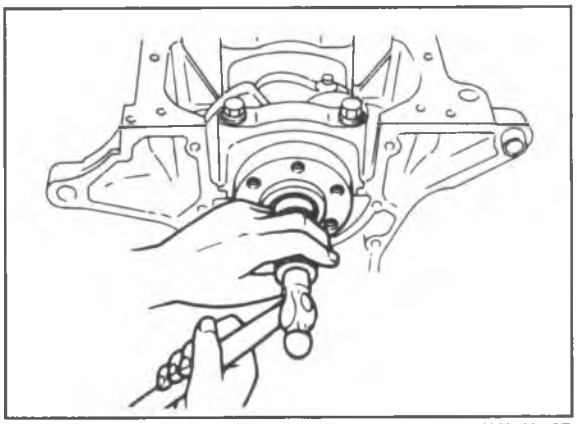

86U01X-127

Pilot Bearing (MTX)
1. Apply engine oil to the outer circumference of the bearing.
2. Set a piece of pipe (outer diameter 30—34 mm, 1.18—1.34 in) against the outer race of the bearing, then tap it evenly into the crankshaft.
3. Lubricate the bearing with grease.

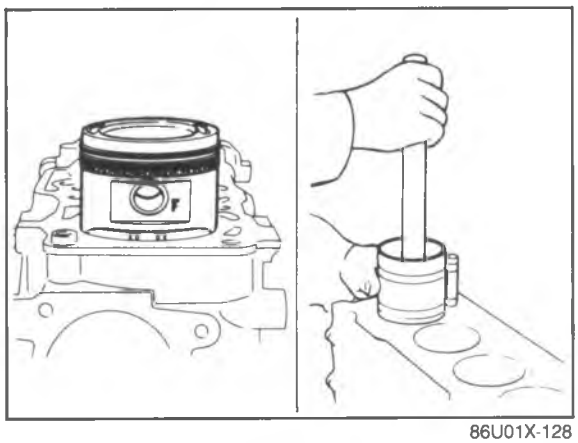

86U01X-128

Piston and Connecting Rod Assembly
1. Apply a liberal amount of clean engine oil to the cylinder walls, piston, and rings.
2. Check the piston rings for the end gap alignment.
3. Insert each piston assembly into the cylinder block with the "**F**" mark facing the front of the engine. Use a piston installer tool (commercially available).

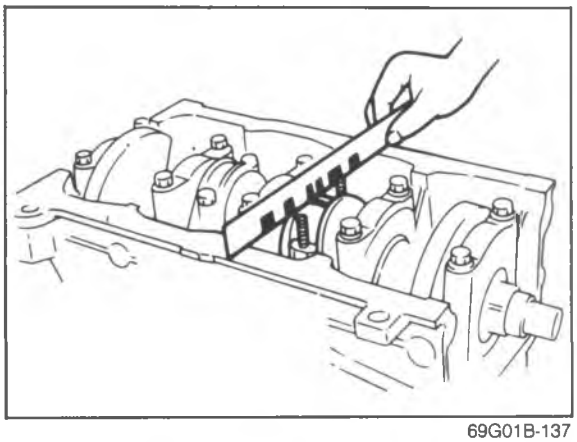

69G01B-137

Connecting Rod Cap

1. Check the connecting rod bearing clearances using the same procedure as used for the main bearing oil clearance.

   Connecting rod cap tightening torque:
   65—69 N·m (6.6—7.0 m-kg, 48—51 ft-lb)

   Oil clearance:
   0.027—0.067 mm (0.0011—0.0026 in)
   Maximum: 0.10 mm (0.0039 in)

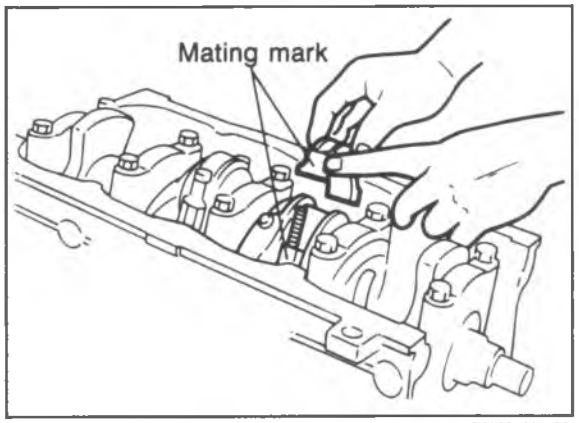

86U01X-129

Caution
Align the alignment marks on the cap and on the connecting rod when installing the connecting rod cap.

2. If the oil clearance exceeds the maximum, grind the crankshaft and use undersize bearings. (Refer to page 1—54.)

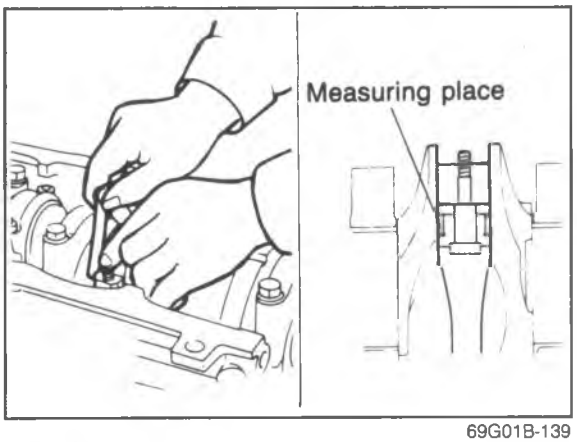

69G01B-139

3. Check the side clearance of each connecting rod without the cap installed.

   Side clearance:
   0.110—0.262 mm (0.004—0.0103 in)
   Maximum: 0.30 mm (0.012 in)

   If the clearance exceeds the maximum, replace the connecting rod.

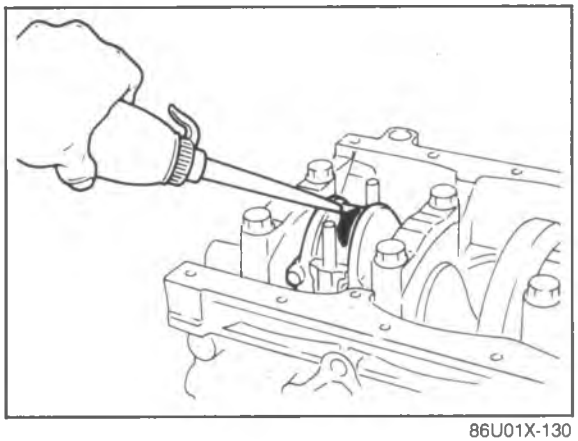

86U01X-130

4. Apply a liberal amount of engine oil to the crankpin journal and connecting rod bearing.
5. Install the connecting rod cap with the alignment marks aligned.

   Tightening torque:
   65—69 N·m (6.6—7.0 m-kg, 48—51 ft-lb)

CYLINDER BLOCK—II
Torque Specifications

19—25 N·m
(1.9—2.6 m-kg, 14—19 ft-lb)

M8 Smaller:
19—25 N·m
(1.9—2.6 m-kg,
14—19 ft-lb)

M10 bigger:
37—52 N·m
(3.8—5.3 m-kg,
27—38 ft-lb)

8—12 N·m
(80—120 cm-kg, 69—104 in-lb)

19—30 N·m
(1.9—3.1 m-kg,
14—22 ft-lb)

8—12 N·m
(80—120 cm-kg,
69—104 in-lb)

8—12 N·m
(80—120 cm-kg,
69—104 in-lb)

96—103 N·m
(9.8—10.5 m-kg,
71—76 ft-lb)

22—32 N·m
(2.2—3.3 m-kg,
16—24 ft-lb)

7—12 N·m
(70—120 cm-kg, 61—104 in-lb)

ATX 96—103 N·m
(9.8—10.5 m-kg, 71—76 ft-lb)

69G01A-166

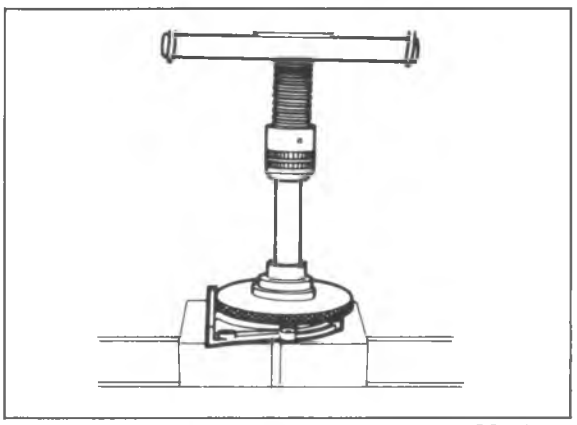

4BG01A-158

Rear Cover

1. Apply engine oil to the rear cover, oil seal and oil seal lip.
2. Press the oil seal into the rear cover.

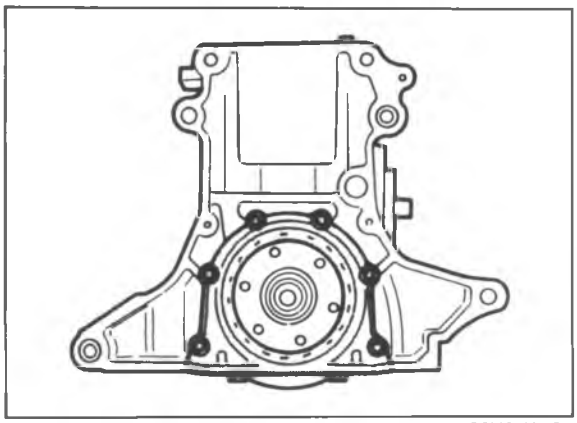

86U01X-131

3. Install the rear cover and a new gasket.

Tightening torque:
8—12 N·m (80—120 cm-kg, 69—104 in-lb)

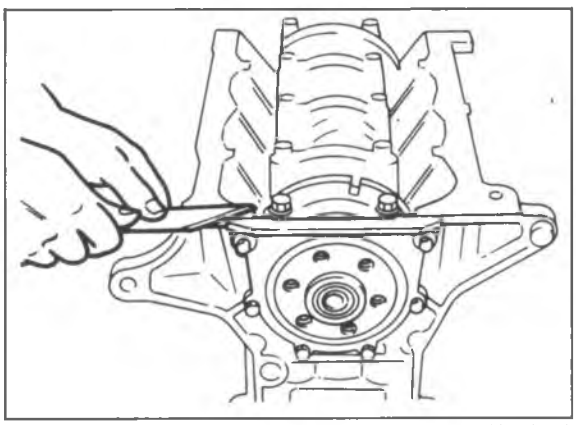

86U01X-132

4. Cut away the portion of the gasket that projects out from the rear cover assembly toward the oil pan side.

Caution
Do not scratch the rear cover assembly.

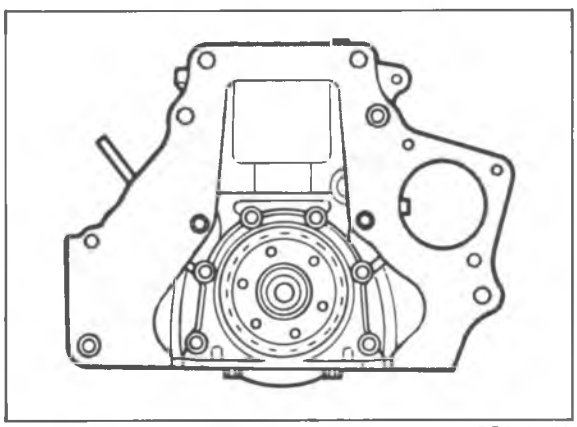

4BG01A-160

End Plate
Install the end plate.

Tightening torque:
19—30 N·m (1.9—3.1 m-kg, 14—22 ft-lb)

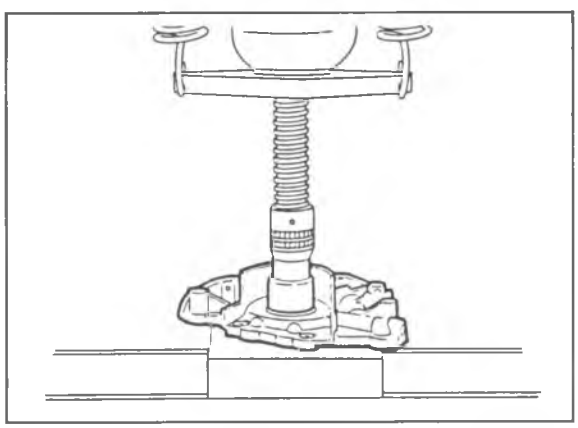

79G01C-085

Oil Pump
1. Apply engine oil to a new oil pump oil seal and the oil pump body.
2. Press the oil seal into the oil pump body.

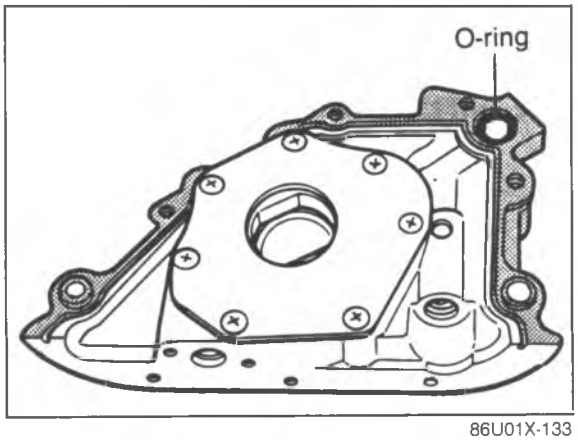

86U01X-133

3. Apply engine oil to the oil seal lip.
4. Remove any dirt or other material from the contact surfaces.
5. Apply a continuos bead of silicon sealant to the contact surface of the oil pump.

Caution
Do not allow any sealant to get into the oil hole.

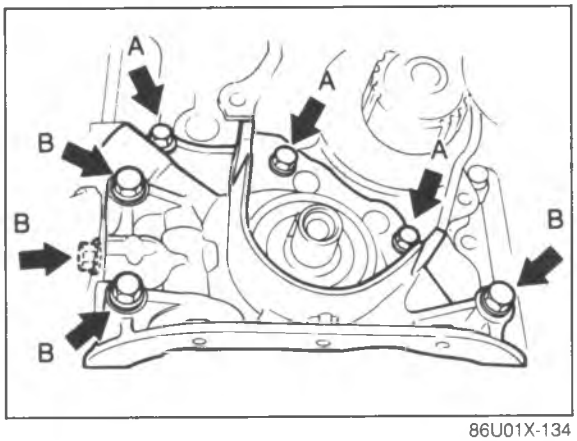

86U01X-134

6. Install a new O-ring into the pump body.
7. Install the oil pump.

Tightening torque:
Bolt A:
19—25 N·m (1.9—2.6 m-kg, 14—19 ft-lb)
Bolt B:
37—52 N·m (3.8—5.3 m-kg, 27—38 ft-lb)

8. Remove any sealant which has been squeezed out.

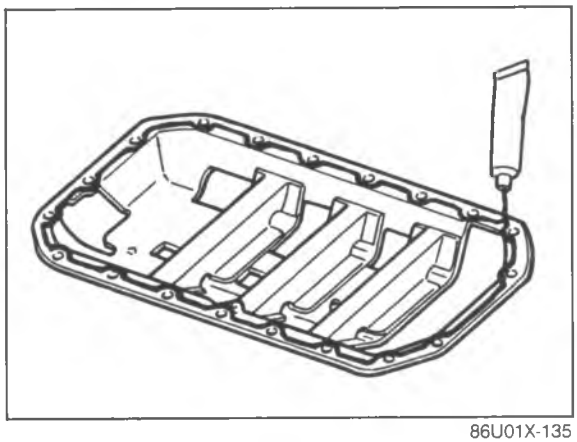

86U01X-135

Stiffener
1. Remove any dirt or other material from the contact surface.
2. Apply a continuous bead of silicone sealant to the stiffener along the inside of the bolt holes, and overlap the ends.
3. Install the stiffener.

Tightening torque:
8—11 N·m (80—110 cm-kg, 69—95 in-lb)

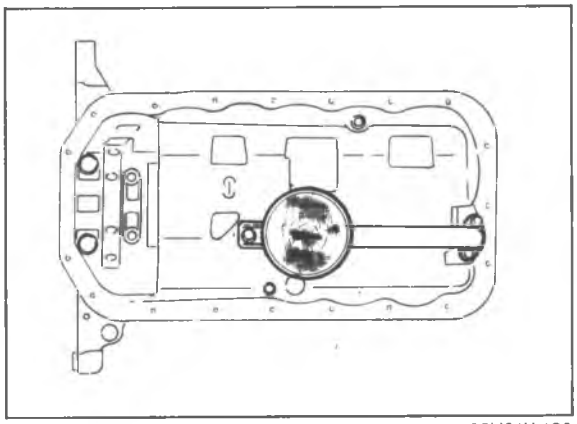

86U01X-136

Oil Strainer
Install the oil strainer and a new gasket.

Tightening torque:
8—12 N·m (80—120 cm-kg, 69—104 in-lb)

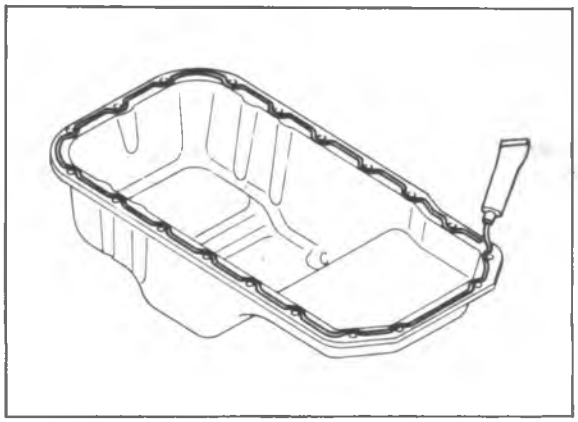

86U01X-137

Oil Pan

1. Apply a continuous bead of silicon sealant to the oil pan along the inside of the bolt holes, and overlap the ends.
2. Install the oil pan.

Tightening torque:
7—12 N·m (70—120 cm-kg, 61—104 in-lb)

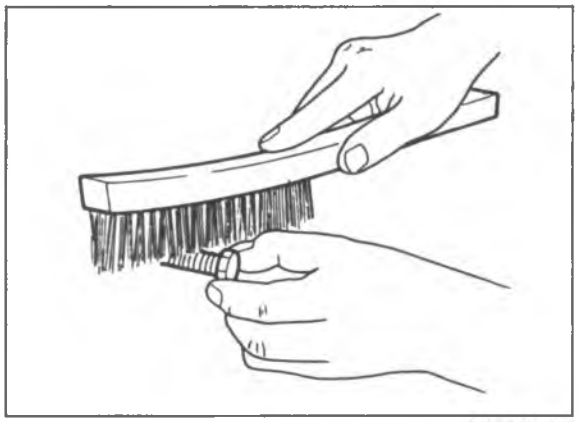

86U01X-138

Flywheel (MTX), Drive Plate (ATX)

1. Remove any old sealant from the bolts and bolt holes. If old sealant can not removed from the bolt, replace it.
2. Apply sealant to the bolt threads.

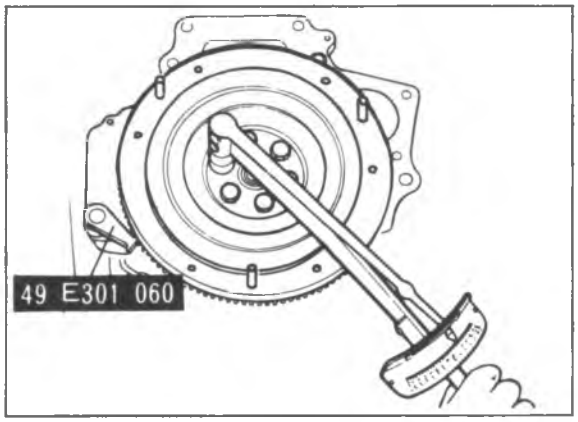

86U01X-139

(MTX)

3. Install, and tighten the flywheel with the **SST**.

Tightening torque:
96—103 N·m (9.8—10.5 m-kg, 71—76 ft-lb)

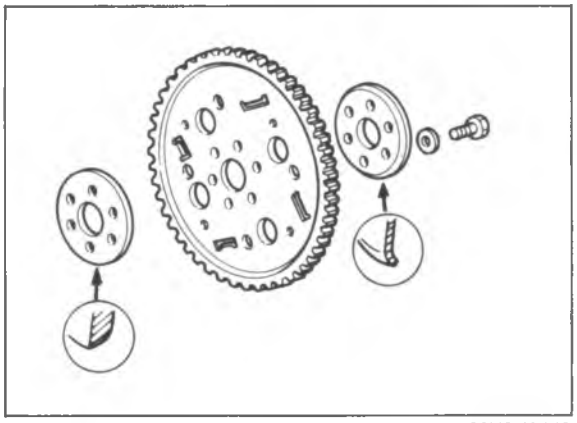

86U01X-140

(ATX)

3. Install, and tighten the drive plate adapter, drive plate and backing plate with the **SST**.

Tightening torque:
96—103 N·m (9.8—10.5 m-kg, 71—76 ft-lb)

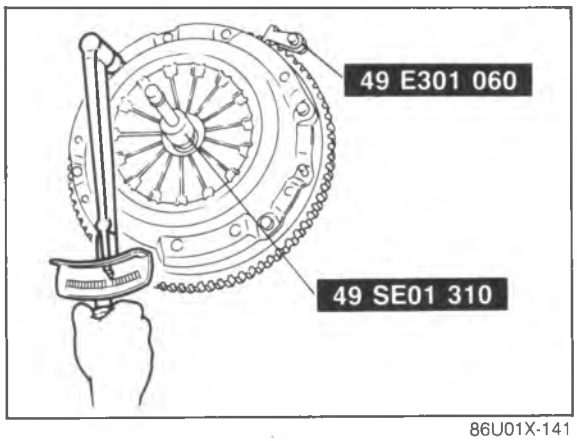

86U01X-141

Clutch Disc and Clutch Cover (MTX)
Install the clutch disc and clutch cover using the **SST**. (Refer to Section 6.)

Tightening torque:
22—32 N·m (2.2—3.3 m-kg, 16—24 ft-lb)

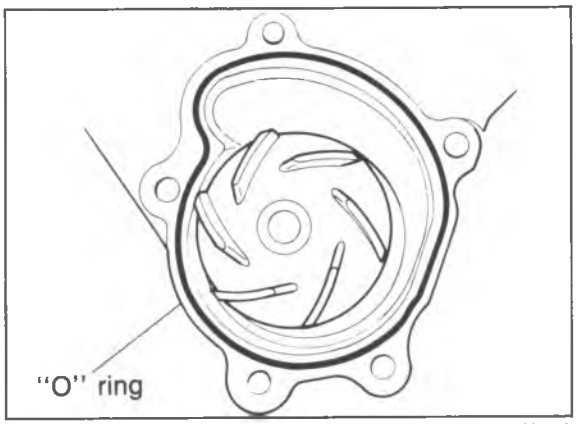

86U01X-142

Water Pump
1. Remove all dirt, grease, and other material from the water pump mounting surface.
2. Place a new O-ring in position.

Caution
Do not reuse the original O-ring.

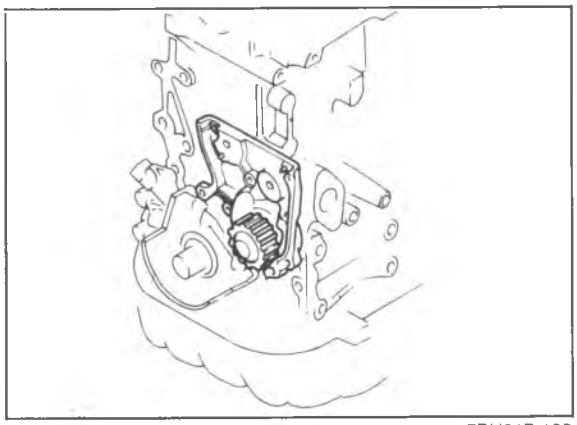
7BU01B-103

3. Install the water pump.

Tightening torque:
19—25 N·m (1.9—2.6 m-kg, 14—19 ft-lb)

CYLINDER HEAD
Torque Specifications

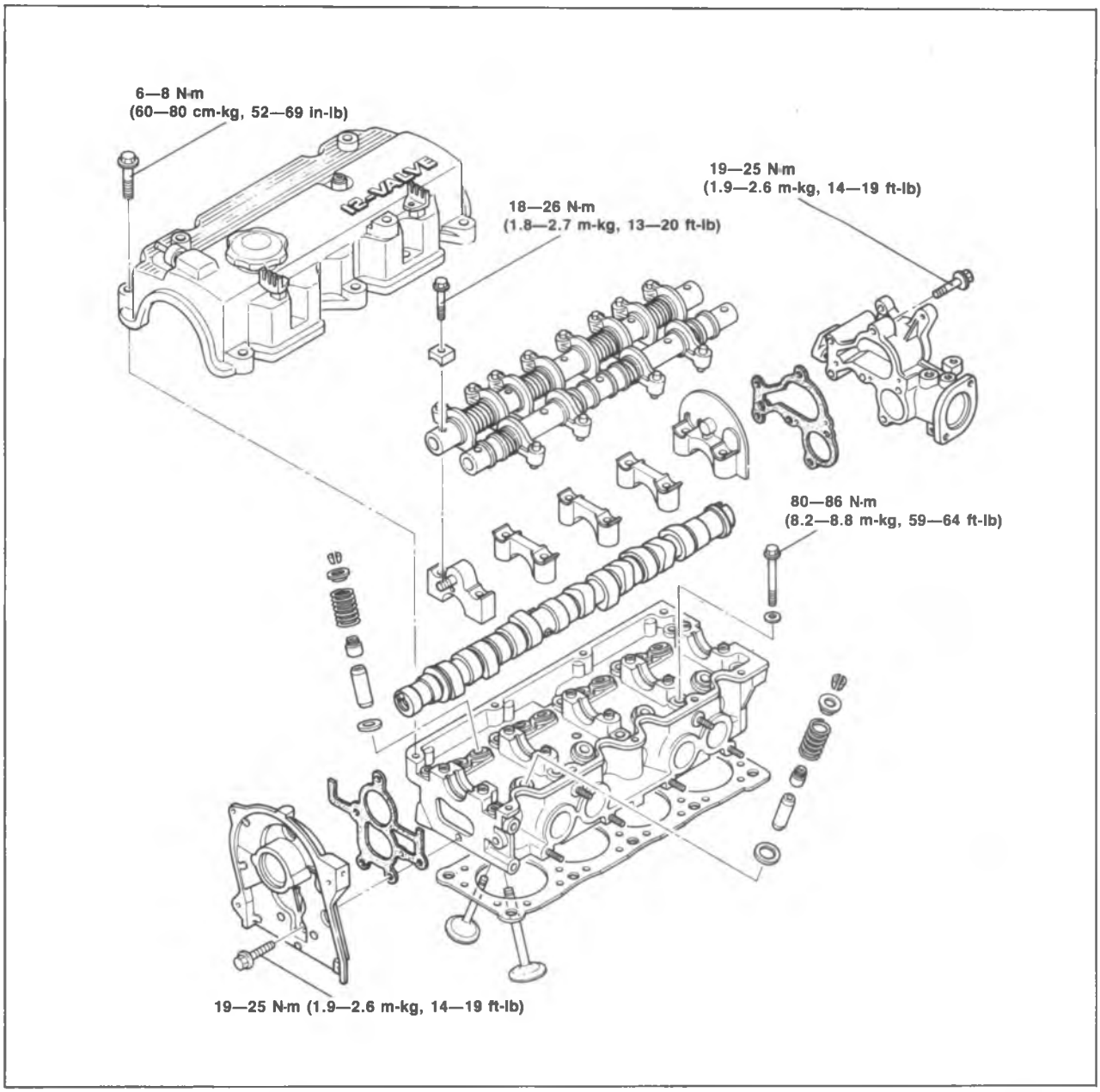

69G01B-152

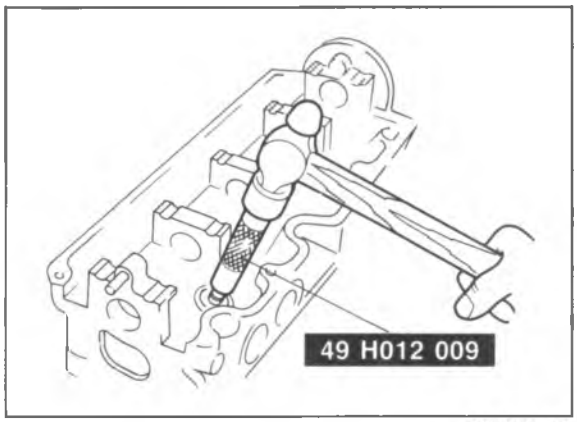

86U01X-143

Valve Seal

1. Apply engine oil to the inside of the new valve seal.
2. Install the valve seal onto the valve guide with the **SST**.

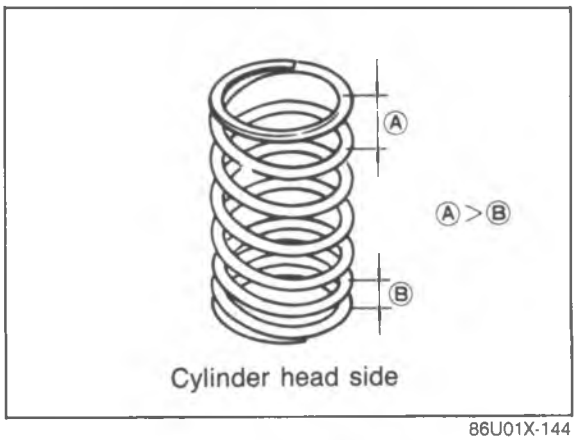

86U01X-144

Valve and Valve Spring

1. Install the lower spring seat.
2. Install the valve.
3. Install the valve springs and the upper spring seat.

Note
Install the valve spring with the closer pitch toward the cylinder head.

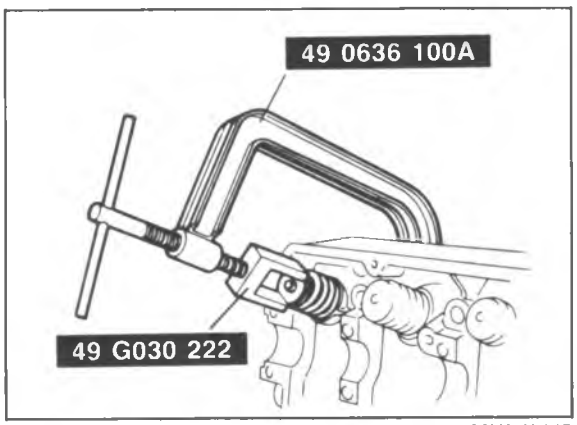

86U01X-145

4. Compress the valve spring with the **SST**; then install the valve keepers.
5. Tap the end of the valve stem lightly two or three times with a plastic hammer to confirm that the keepers are all fully seated.

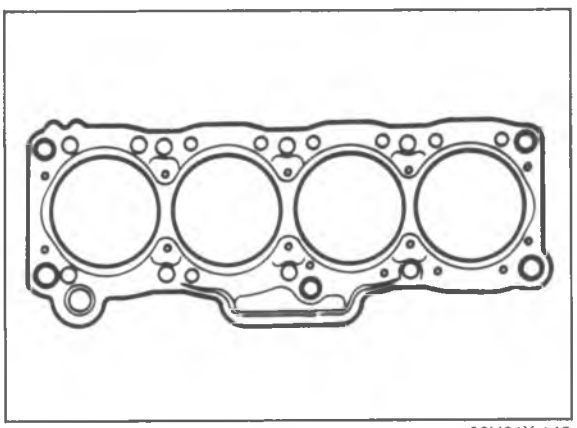

86U01X-146

Cylinder Head

1. Thoroughly remove all dirt, oil, or other material from the top of the cylinder block.
2. Place the new cylinder head gasket in position.

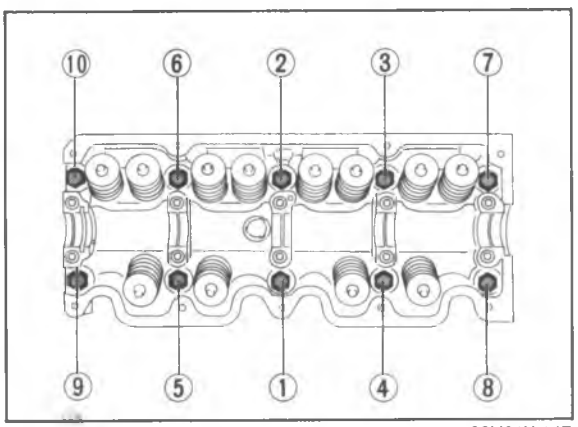

86U01X-147

3. Install the cylinder head.
4. Apply engine oil to the bolt threads and seat faces.
5. Tighten the cylinder head bolts in two or three steps in the order shown in the figure.

Tightening torque:
80—86 N·m (8.2—8.8 m-kg, 59—64 ft-lb)

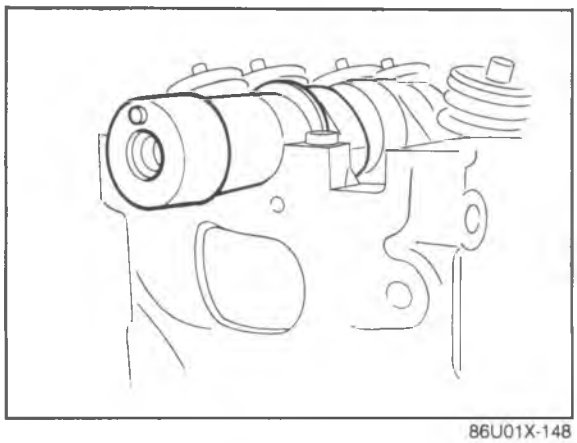

86U01X-148

Camshaft

1. Apply a liberal amount of engine oil to the journals and bearings.
2. Place the camshaft in position with the dowel pin facing straight up.

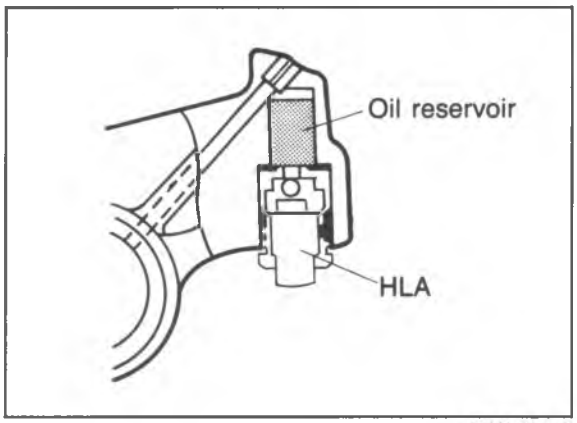

86U01X-149

Hydraulic Lash Adjuster (HLA)

1. Pour engine oil into the oil reservoir in the rocker arm.
2. Apply engine oil to the new HLA.
3. Carefully install the HLA into the rocker arm.

Caution
Be careful not to damage the O-ring when installing the HLA.

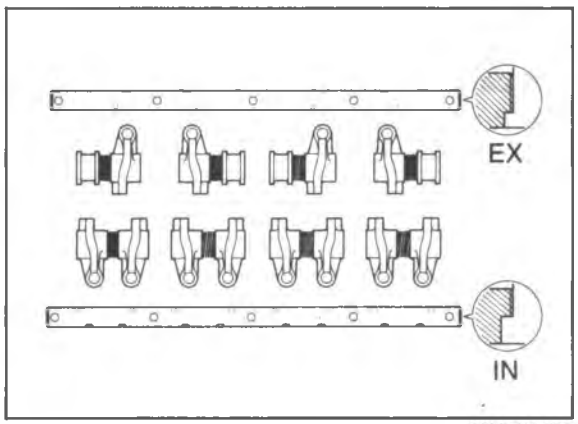

86U01X-150

Camshaft Cap, Rocker Arm and Shaft Assembly

1. Assemble the rocker arm and shaft assembly as shown in the figure.

Note
a) The intake side shaft has twice as many oil holes as the exhaust side shaft.
b) The stepped ends are the rear of the shafts.

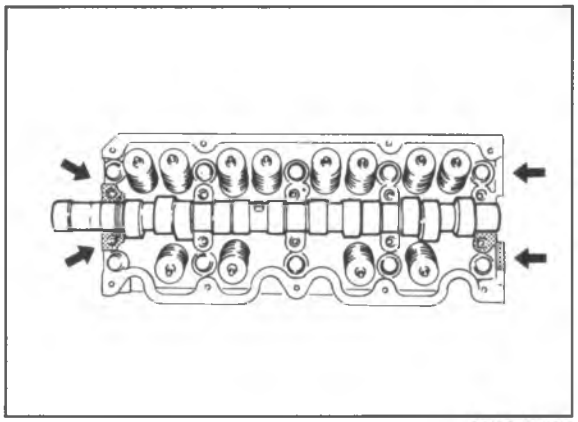

86U01X-151

2. Apply silicon sealant to the areas shown in the figure.

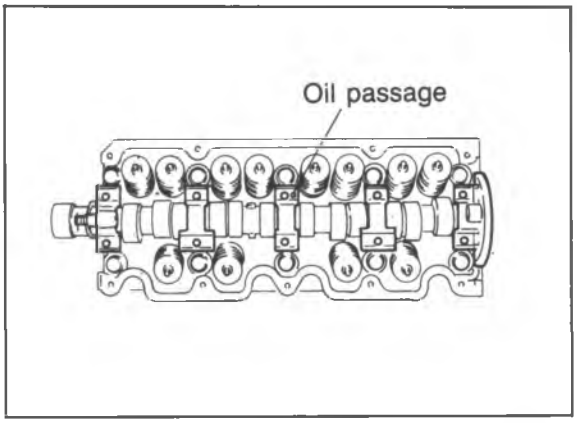

86U01X-152

3. Apply liberal amount of clean engine oil to the cam lobes and journals.
4. Position the camshaft caps according to the ⬅ mark.

Note
The No. 3 camshaft cap has an oil passage from the cylinder head, be certain it is installed correctly.

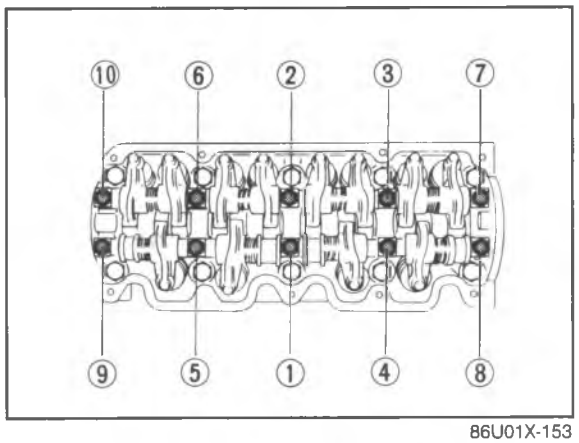

86U01X-153

5. Install the rocker arm and shaft assemblies. Tighten the bolts in two or three steps in the order shown in the figure.

Tightening torque:
18—26 N·m (1.8—2.7 m-kg, 13—20 ft-lb)

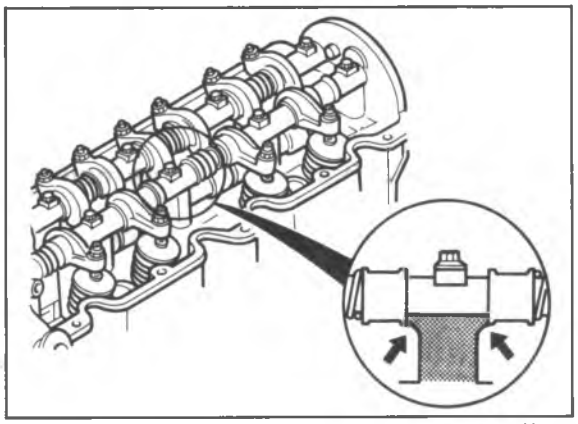

86U01X-154

Caution
Be careful that the rocker arms or spacers do not get caught between the shaft and camshaft cap.

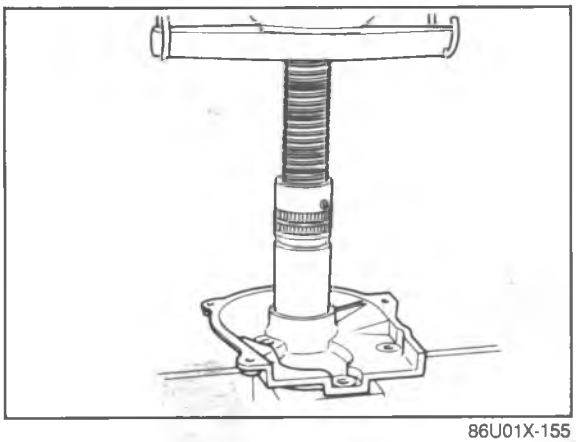

86U01X-155

Front Housing
1. Apply engine oil to the front housing and a new oil seal.
2. Press the oil seal into the front housing.

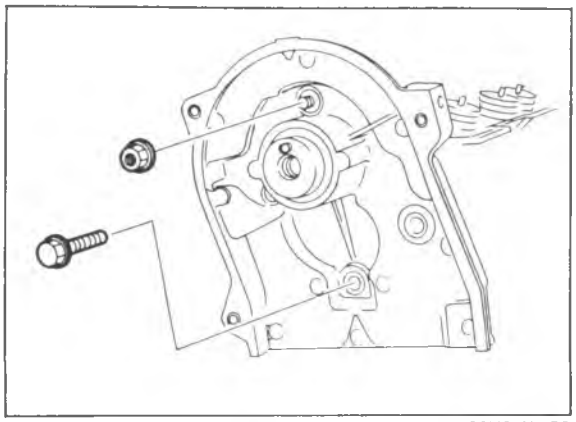

86U01X-156

3. Apply engine oil to the oil seal lip.
4. Install the front housing and a new gasket.

Tightening torque:
19—25 N·m (1.9—2.6 m-kg, 14—19 ft-lb)

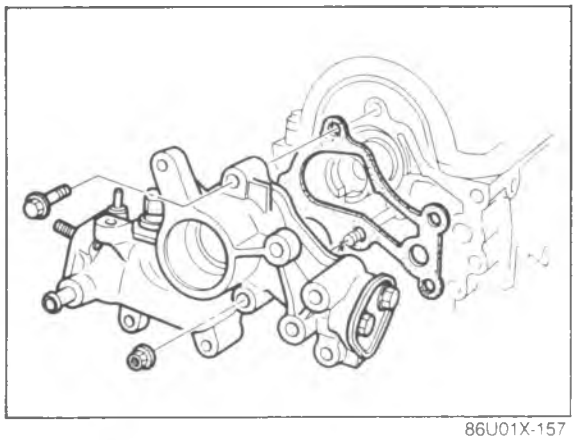

86U01X-157

Rear Housing
Install the rear housing and a new gasket.

Tightening torque:
19—25 N·m (1.9—2.6 m-kg, 14—19 ft-lb)

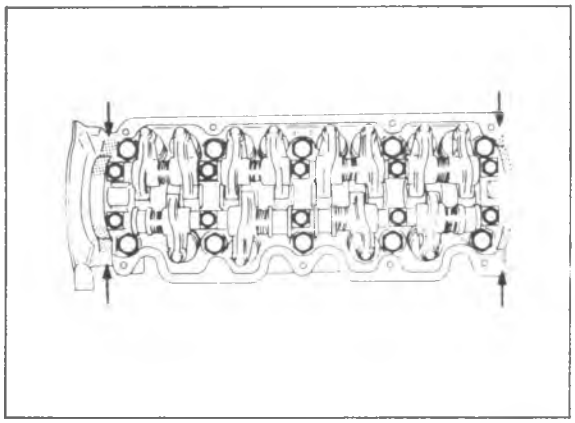

86U01X-158

Cylinder head cover and gasket
1. Clean out used silicon sealant from the gasket and gasket groove.
2. Apply new silicon sealant to the back of the gasket.
3. Apply silicon sealant to the shaded areas shown in the figure.
4. Install the cylinder head cover.

Tightening torque:
6—8 N·m (60—80 cm-kg, 52—69 in-lb)

TIMING BELT
Torque Specifications

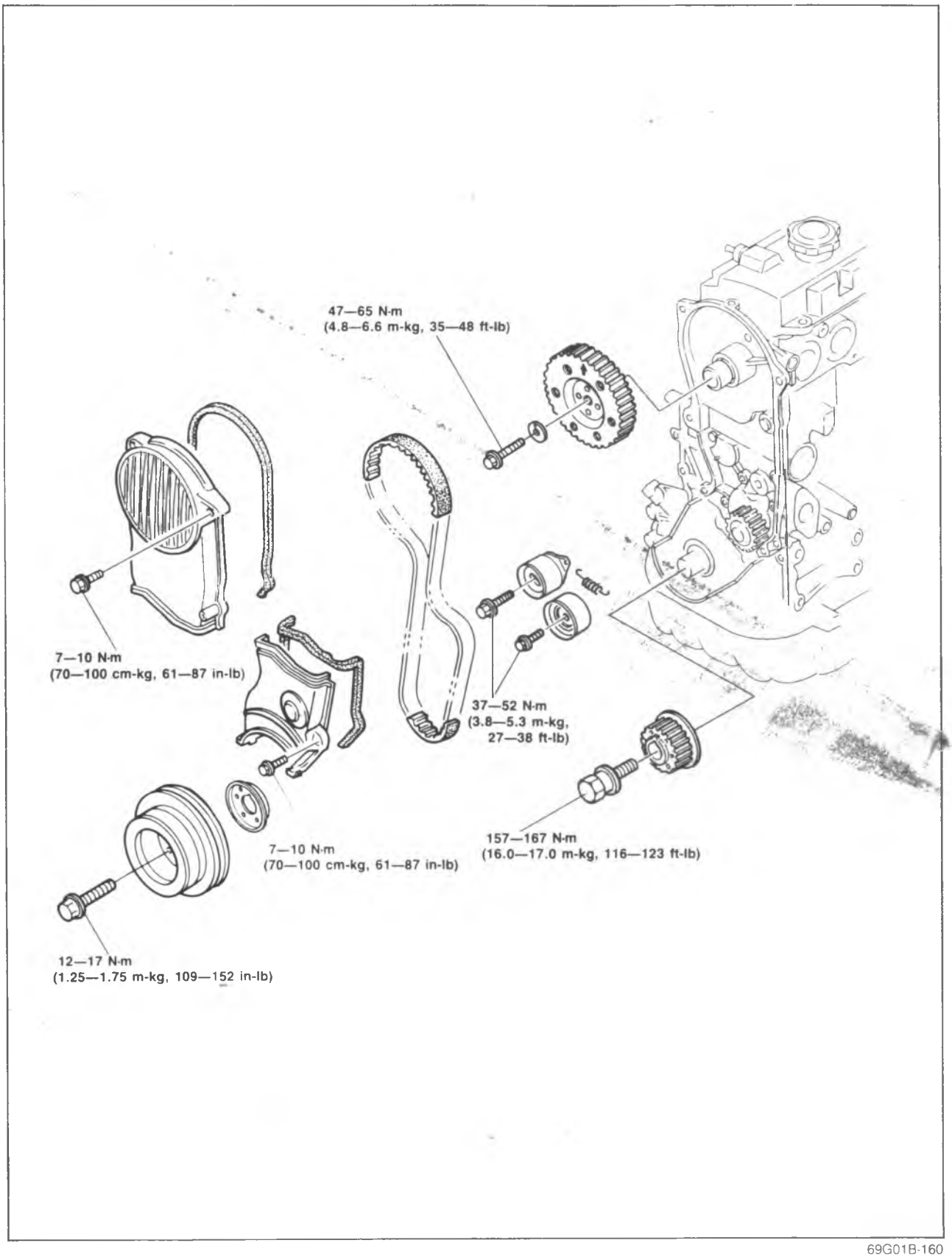

69G01B-160

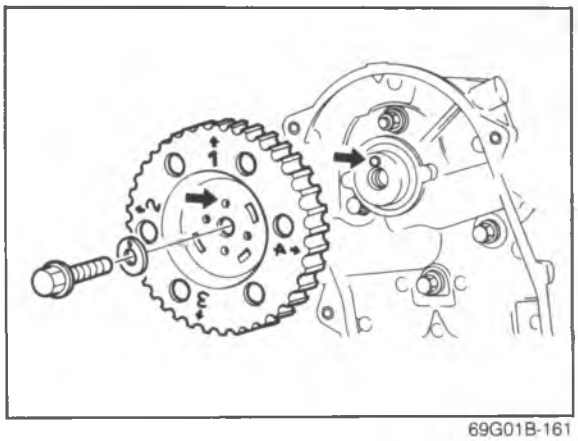

69G01B-161

Camshaft Pulley

1. Install the camshaft pulley on the camshaft with the dowel pin fit into the hole at the "**↑1**" mark.

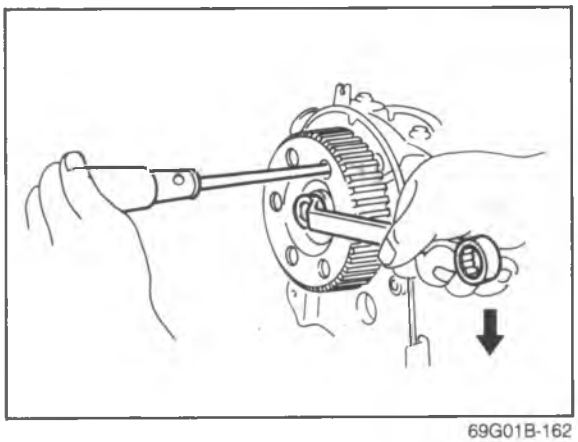

69G01B-162

2. Tighten the camshaft pulley bolt.

   Tightening torque:
   47—65 N·m (4.8—6.6 m-kg, 35—48 ft-lb)

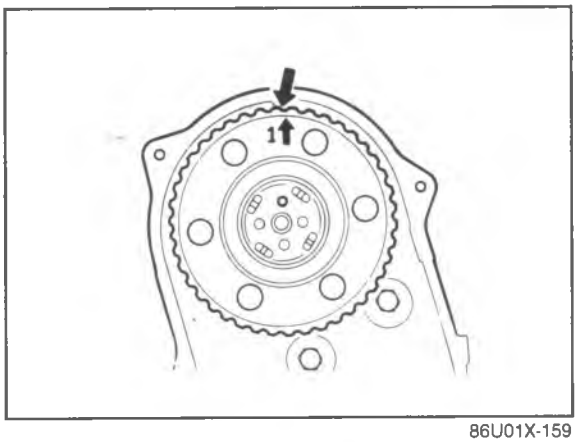

86U01X-159

3. Align the "**↑1**" mark on the pulley with the alignment mark on the front housing.

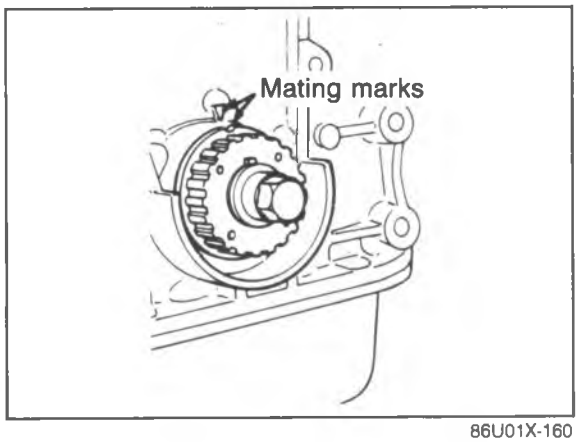

86U01X-160

Timing Belt Pulley

1. Reverse the direction of the **SST** (ring gear brake).
2. Install the crankshaft key.
3. Install the timing belt pulley on the crankshaft.

   Tightening torque: 157—167 N·m
   (16.0—17.0 m-kg, 116—123 ft-lb)

4. Release the ring gear brake.
5. Align the timing belt pulley and the pump body alignment marks.

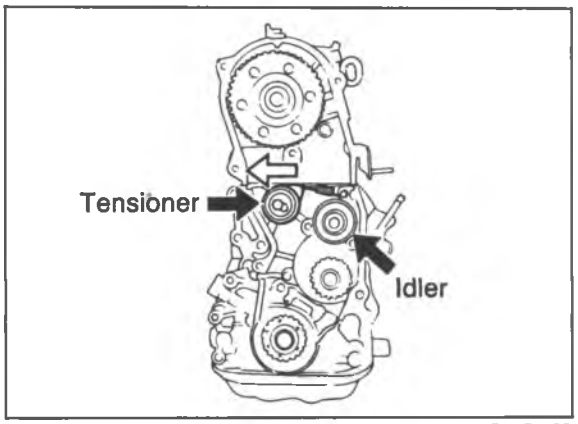

69G01B-165

Timing Belt Idler Pulley
Install the timing belt idler pulley.

Tightening torque:
37—52 N·m (3.8—5.3 m-kg, 27—38 ft-lb)

Timing Belt Tensioner
1. Install the timing belt tensioner and tensioner spring.
2. Tentatively secure the tensioner with the spring fully extended.

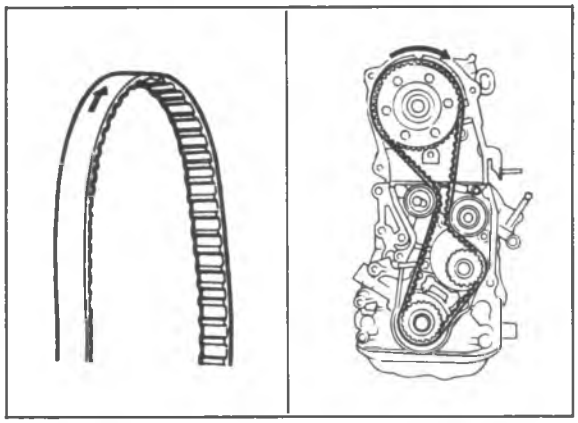

86U01X-161

Timing Belt
1. Install the timing belt so that there is no looseness at the water pump pulley and idler pulley side.

Caution
a) If the timing belt is being reused, it must be reinstalled to rotate in the original direction.
b) Check that there is no oil, grease, or dirt on the timing belt.

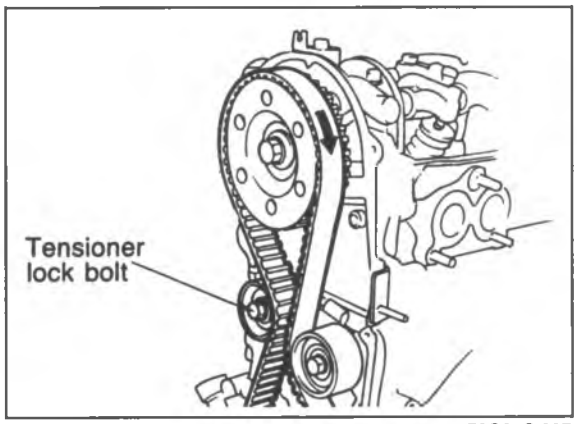

79G01C-097

2. Loosen the tensioner lock bolt.
3. Turn the crankshaft twice in the direction of rotation.
4. Check that the mating marks are correctly aligned. If not aligned, remove the timing belt and tensioner, and repeat the above-mentioned procedure.

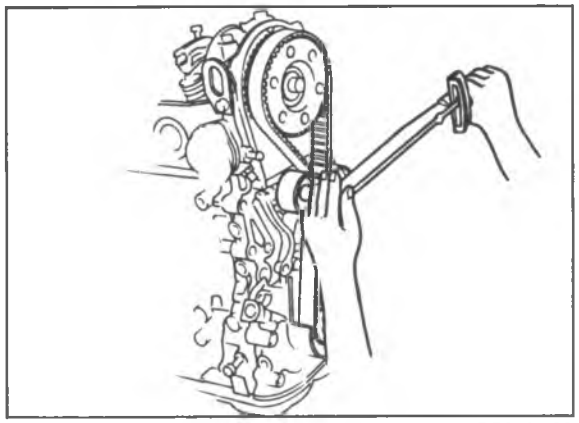

4BG01A-186

5. Tighten the timing belt tensioner lock bolt.

Tightening torque:
37—52 N·m (3.8—5.3 m-kg, 27—38 ft-lb)

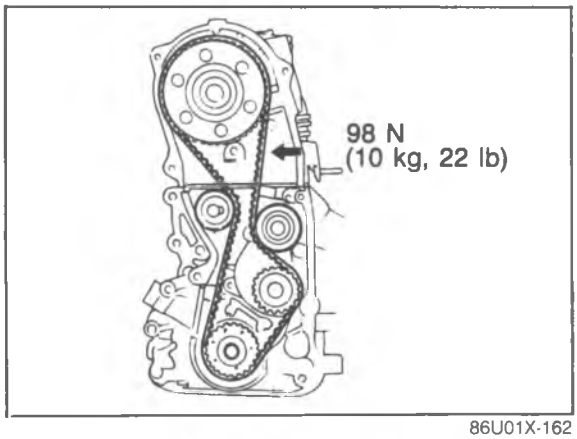

86U01X-162

6. Measure the belt tension between the crankshaft pulley and the camshaft pulley.
   If the timing belt tension is not correct, loosen the tensioner lock bolt and repeat steps 3—5 above. Replace the tensioner spring if necessary.

   Belt deflection:
   7.5—8.5 mm (0.30—0.33 in)
   / 98 N (10 kg, 22 lb)

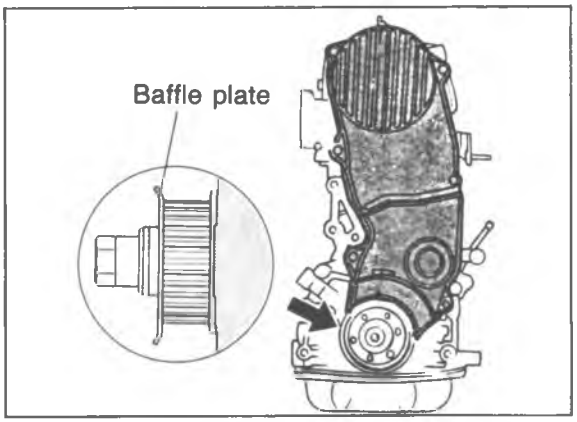

86U01X-163

Baffle Plate
Position the baffle plate on the timing belt pulley.

Timing Belt Cover
Install the lower timing belt cover, upper timing belt cover, and new gaskets.

Tightening torque:
7—10 N·m (70—100 cm-kg, 61—87 in-lb)

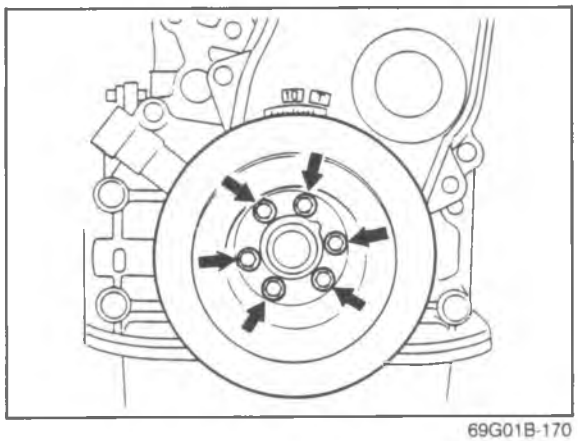

69G01B-170

Crankshaft Pulley
Install the crankshaft pulley.

Tightening torque: 12—17 N·m
(1.25—1.75 m-kg, 109—152 in-lb)

AUXILIARY PARTS
Torque Specifications

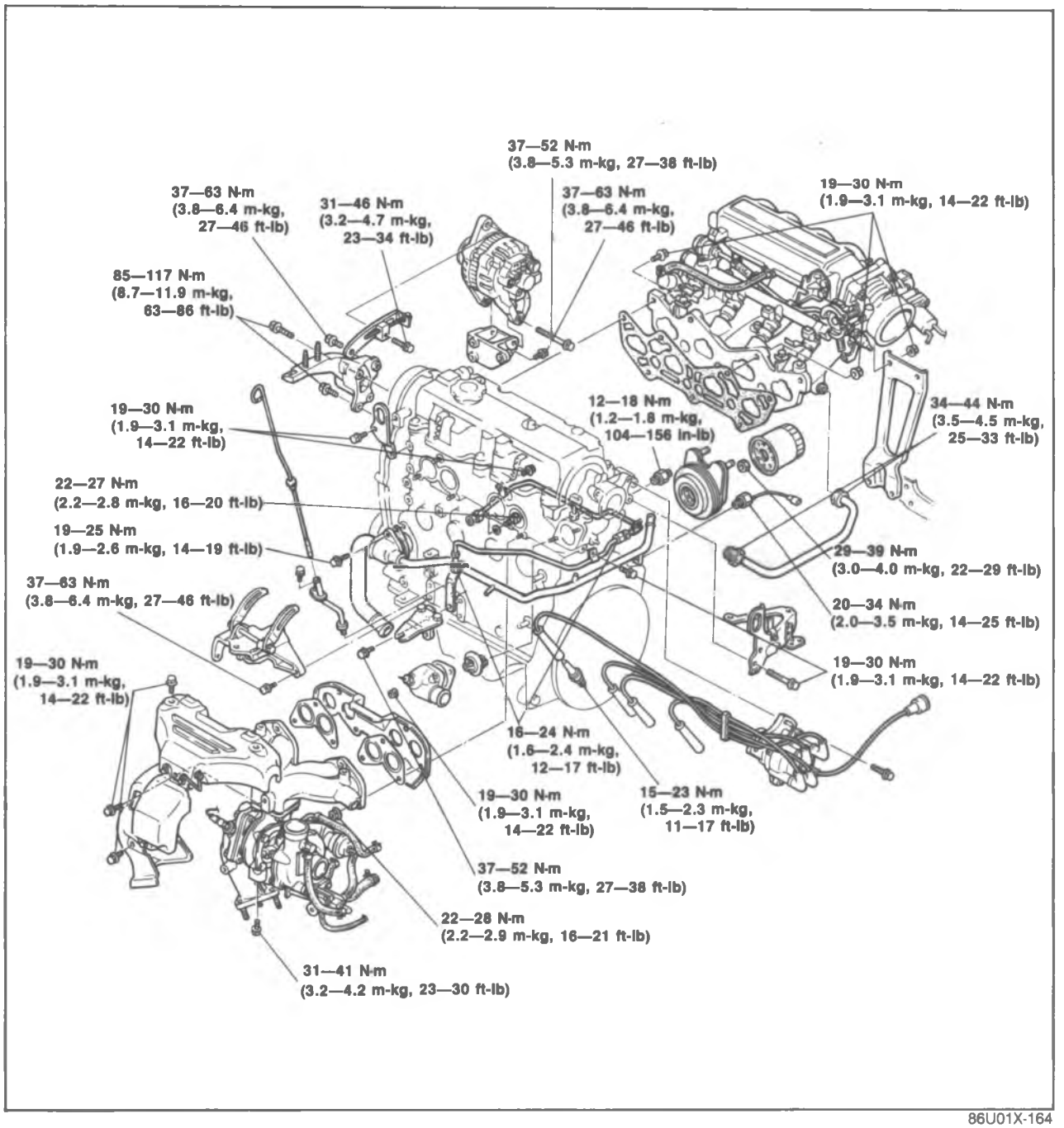

86U01X-164

86U01X-165

Knock Sensor (Turbo)
Install the knock sensor.

Tightening torque:
20—34 N·m (2.0—3.5 m-kg, 14—25 ft-lb)

Oil Pressure Switch
Install the oil pressure switch.

Tightening torque: 12—18 N·m
(1.2—1.8 m-kg, 104—156 in-lb)

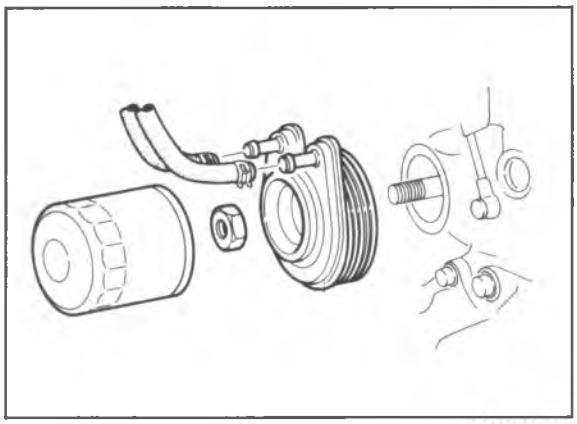

86U01X-166

Oil Cooler (Turbo)
Install the oil cooler.

Tightening torque:
29—39 N·m (3.0—4.0 m-kg, 22—29 ft-lb)

Oil Filter
1. Apply engine oil to the rubber gasket of the new filter.
2. Install the oil filter, and tighten it by hand only. Do not use a wrench.

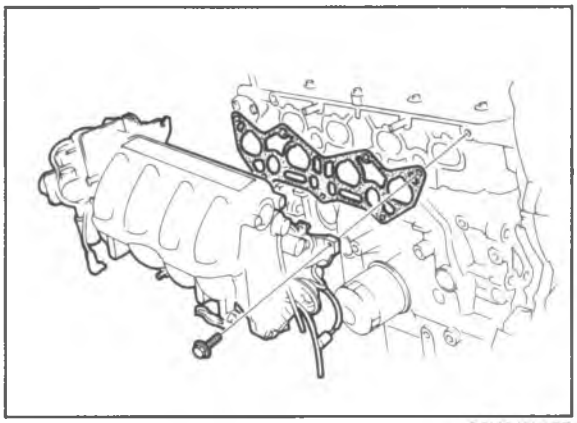

86U01X-167

Intake Manifold Assembly
1. Place the new gasket in position.
2. Install the intake manifold assembly.
3. Tighten the nuts in two or three steps.

Tightening torque:
19—30 N·m (1.9—3.1 m-kg, 14—22 ft-lb)

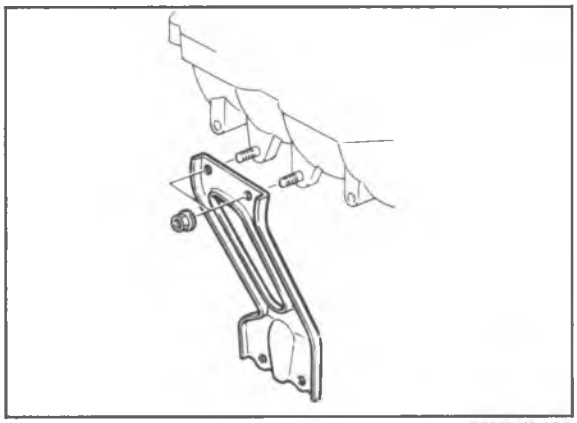

86U01X-168

Intake Manifold Bracket
Install the intake manifold bracket.

Tightening torque:
19—30 N·m (1.9—3.1 m-kg, 14—22 ft-lb)

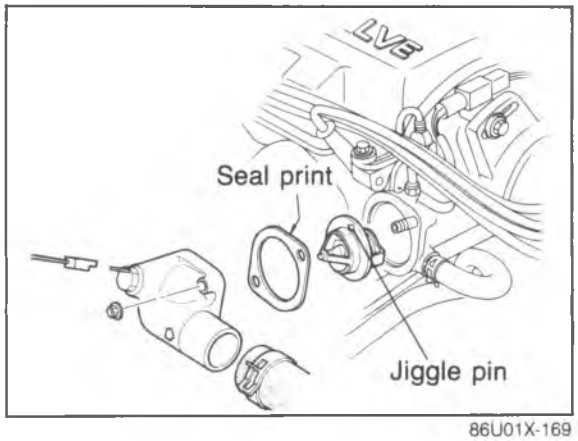

86U01X-169

Thermostat and Thermostat Cover

1. Install the thermostat into the cylinder head with the jiggle pin at the top.
2. Position a new gasket with the printed side facing the cylinder head.
3. Install the thermostat cover.

Tightening torque:
19—30 N·m (1.9—3.1 m-kg, 14—22 ft-lb)

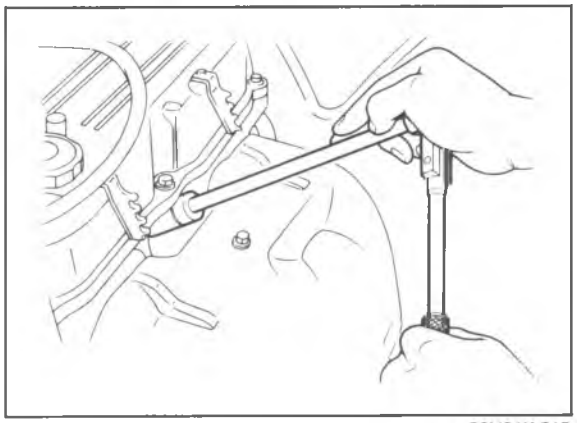

86U01X-219

Spark Plug

1. Apply anti-seize compound or molybdenum-based lubricant to the spark plug threads.
2. Install the spark plugs.

Tightening torque:
15—23 N·m (1.5—2.3 m-kg, 11—17 ft-lb)

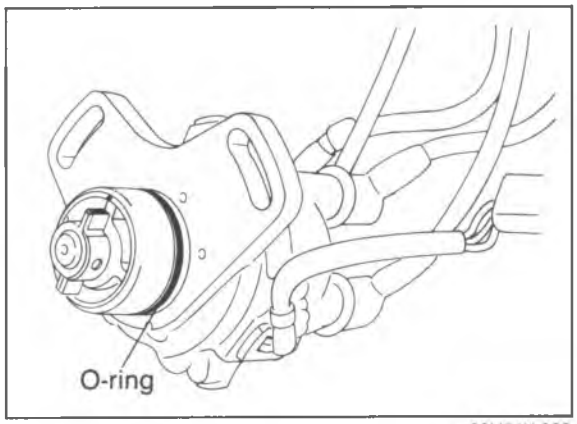

86U01X-039

Distributor

1. Apply engine oil to the O-ring, and position it on the distributor.
2. Apply engine oil to the blade.
3. Install the distributor into the rear housing.
4. Loosely tighten the distributor mounting bolt.

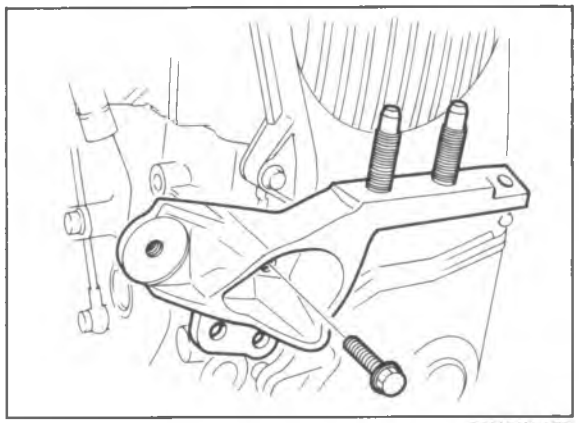

86U01X-170

High-Tension Lead

Install the high-tension leads.

Engine Mount Bracket

Install the engine mount.

Tightening torque:
85—117 N·m (8.7—11.9 m-kg, 63—86 ft-lb)

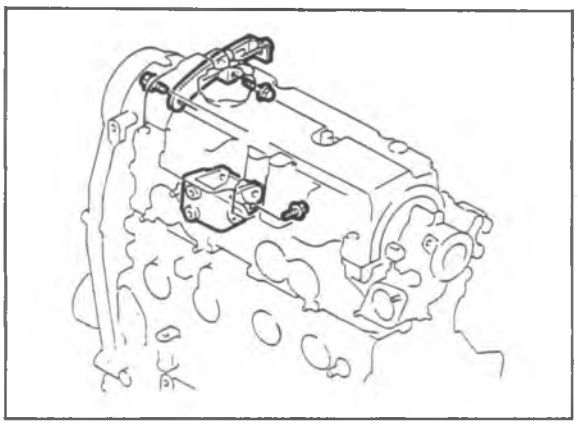

86U01X-171

Alternator

1. Install the alternator strap and bracket.

Tightening torque:
37—63 N·m (3.8—6.4 m-kg, 27—46 ft-lb)

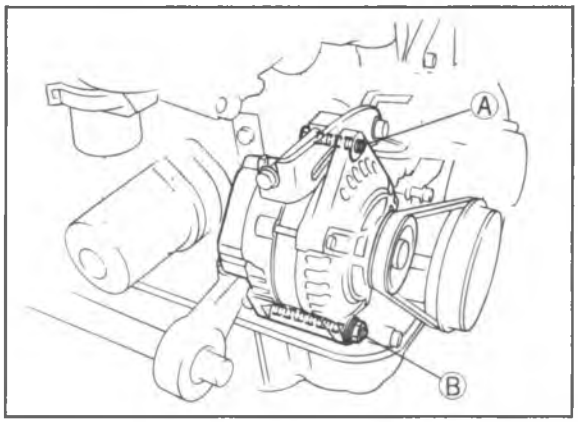

86U01X-172

2. Install the alternator.

Tightening torque
Ⓐ: 31—46 N·m
(3.2—4.7 m-kg, 23—34 ft-lb)
Ⓑ: 37—52 N·m
(3.8—5.3 m-kg, 27—38 ft-lb)

3. Install the alternator drive belt, and adjust the belt deflection. (Refer to page 1—6.)

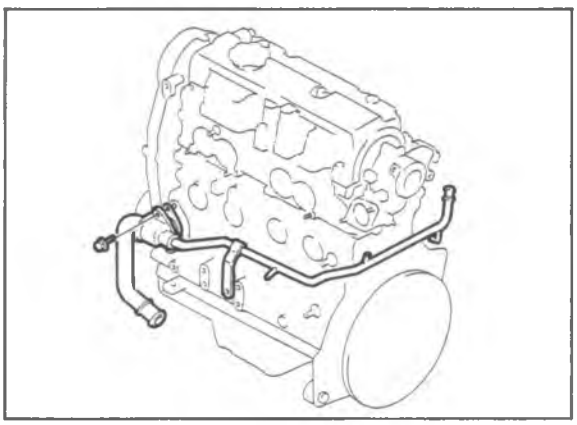

86U01X-173

Coolant Inlet Pipe and Bypass Pipe

1. Install the coolant inlet pipe.

Tightening torque:
19—25 N·m (1.9—2.6 m-kg, 14—19 ft-lb)

2. Apply vegetable oil to the O-ring.
3. Install the coolant bypass pipe.

Tightening torque: 37—63 N·m
(3.8—6.4 m-kg, 27—46 ft-lb)...Non-Turbo

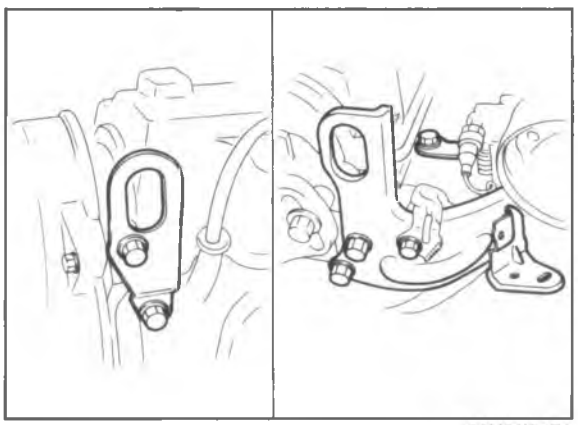

86U01X-174

Engine Hanger

Install the front and rear engine hangers.

Tightening torque:
19—30 N·m (1.9—3.1 m-kg, 14—22 ft-lb)

Turbocharger Bracket (Turbo)

1. Remove the engine from the engine stand.
2. Install the turbocharger bracket.

Tightening torque:
37—52 N·m (3.8—5.3 m-kg, 27—38 ft-lb)

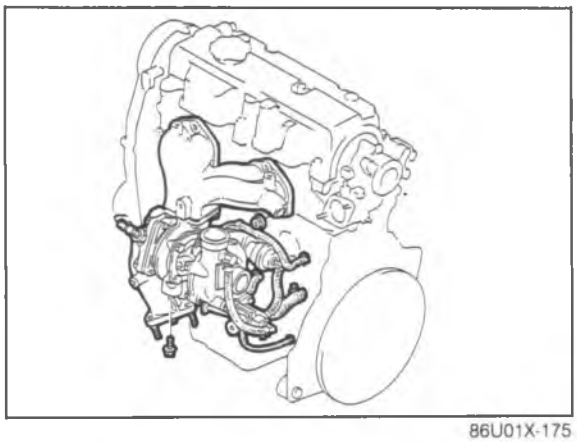

86U01X-175

Exhaust Manifold Assembly

1. Place the new gaskets in position with the ridge facing the cylinder head.
2. Install the exhaust manifold assembly.
3. Tighten the nuts in two or three steps.

   Tightening torque:
   22—28 N·m (2.2—2.9 m-kg, 16—21 ft-lb)

4. Tighten the turbocharger to the bracket (Turbo).

   Tightening torque:
   25—32 N·m (2.5—3.3 m-kg, 18—24 ft-lb)

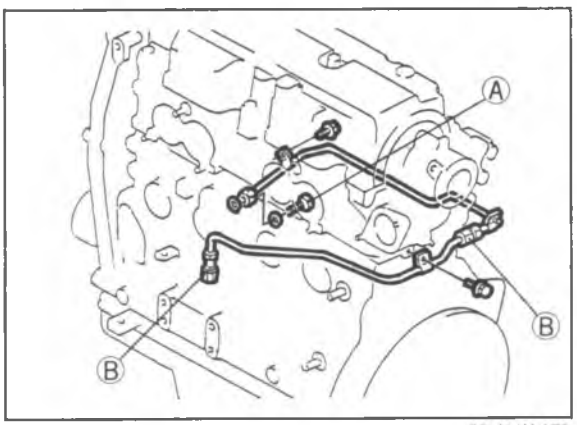

86U01X-176

Oil Pipe and Turbocharger Hose (Turbo)

1. Install the oil pipe.

   Tightening torque:
   Ⓐ: 22—27 N·m
   (2.2—2.8 m-kg, 16—20 ft-lb)
   Ⓑ: 16—24 N·m
   (1.6—2.4 m-kg, 12—17 ft-lb)

2. Tighten the oil pipe bracket and connect the oil hose and water hoses.

   Tightening torque:
   19—30 N·m (1.9—3.1 m-kg, 14—22 ft-lb)

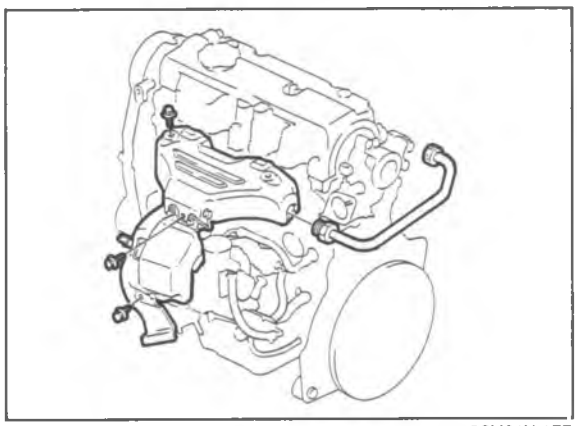

86U01X-177

EGR Pipe

Install the EGR pipe.

Tightening torque:
34—44 N·m (3.5—4.5 m-kg, 25—33 ft-lb)

Exhaust Manifold Insulator

Install the exhaust manifold insulator.

Tightening torque:
19—30 N·m (1.9—3.1 m-kg, 14—22 ft-lb)

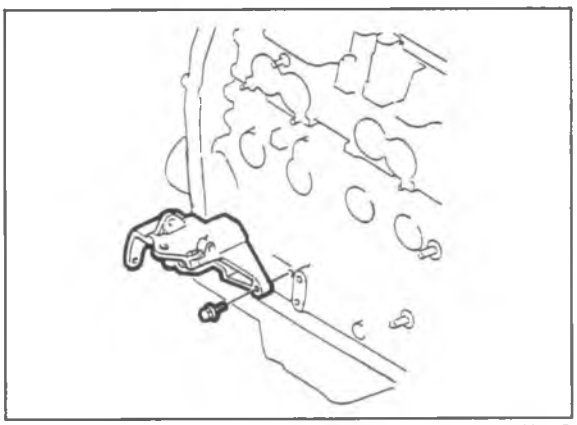

86U01X-178

P/S Oil Pump Bracket

Install the P/S oil pump bracket.

Tightening torque:
37—63 N·m (3.8—6.4 m-kg, 27—46 ft-lb)

INSTALLATION

TRANSAXLE ASSEMBLY

Assemble the transaxle to the engine in the sequence shown in the figure, referring to installation note.

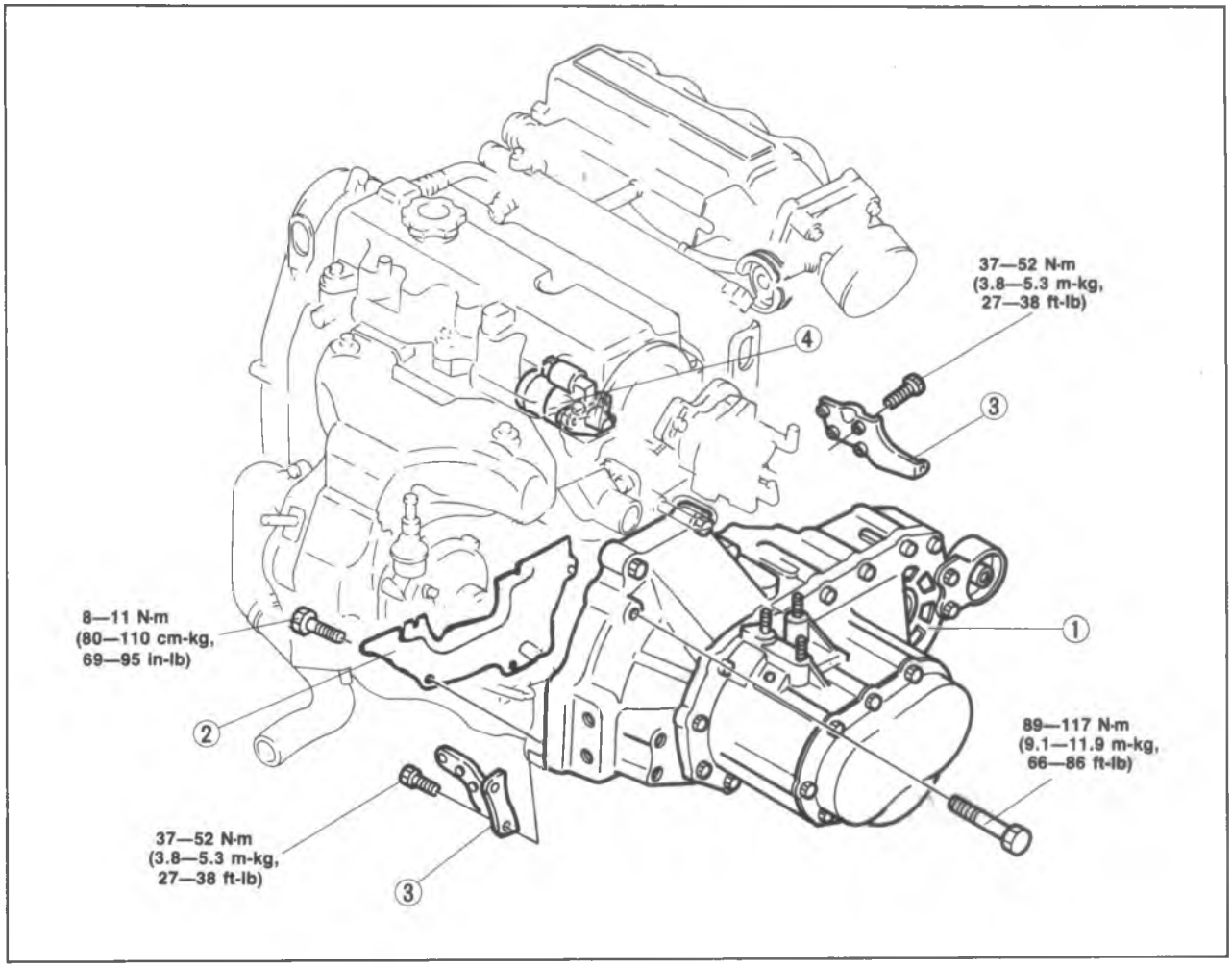

86U01X-179

1. Transaxle
2. Clutch under cover
3. Gusset plate
4. Starter

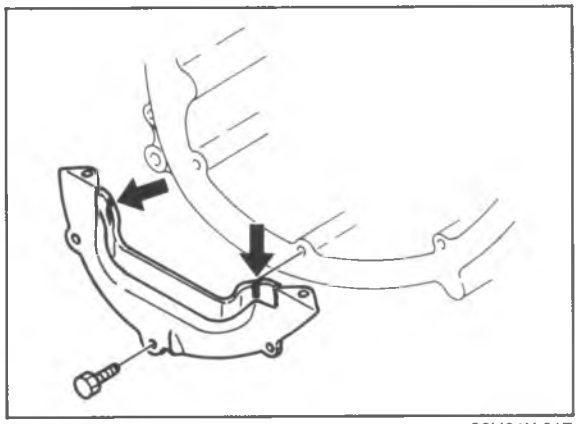

86U01X-217

Installation note
Clutch under cover
Before installation, fill the notches with silicon as shown in the figure.

ENGINE INSTALLATION

Install the engine and transaxle assembly.

Warning: Be sure the vehicle is securely supported.

Torque Specifications

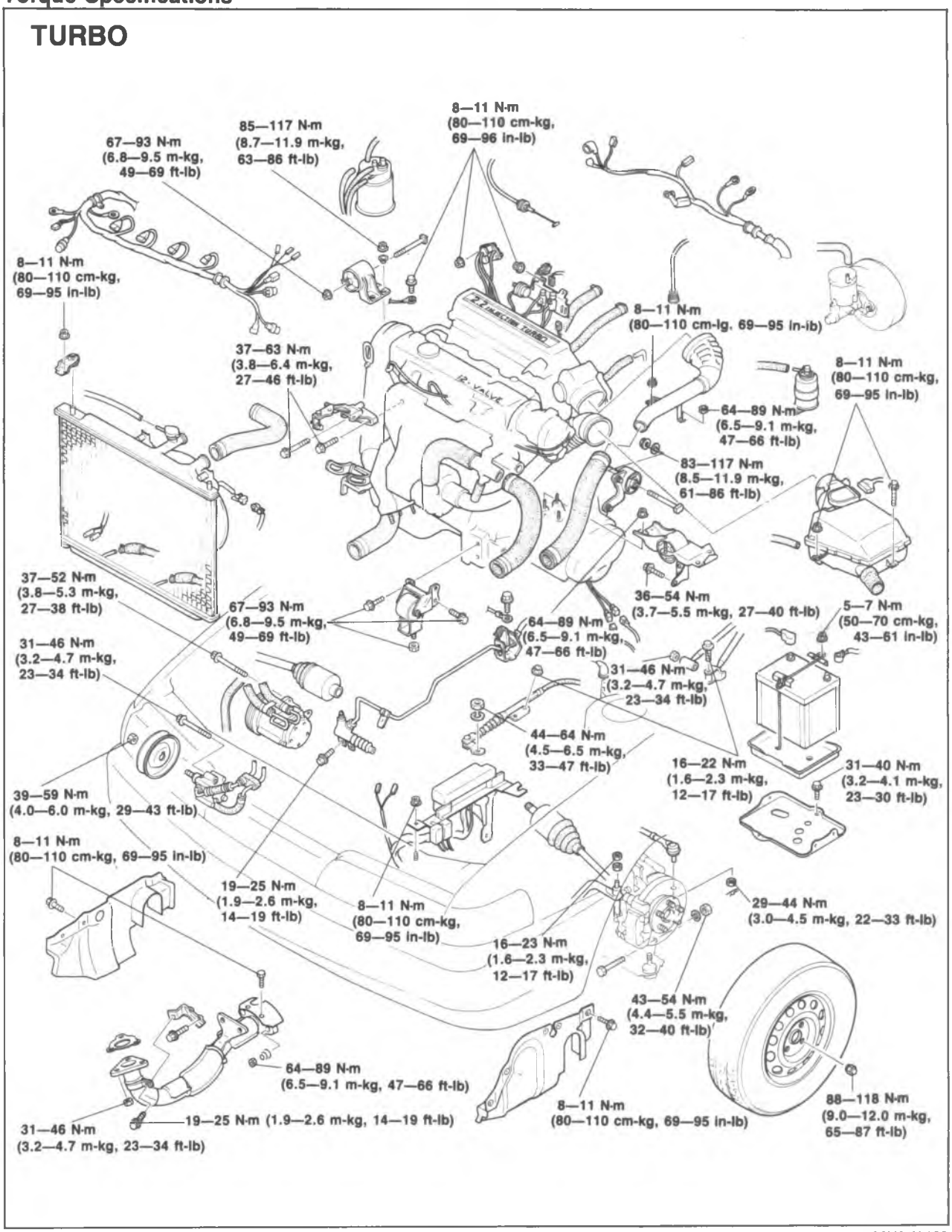

86U01X-180

NON-TURBO

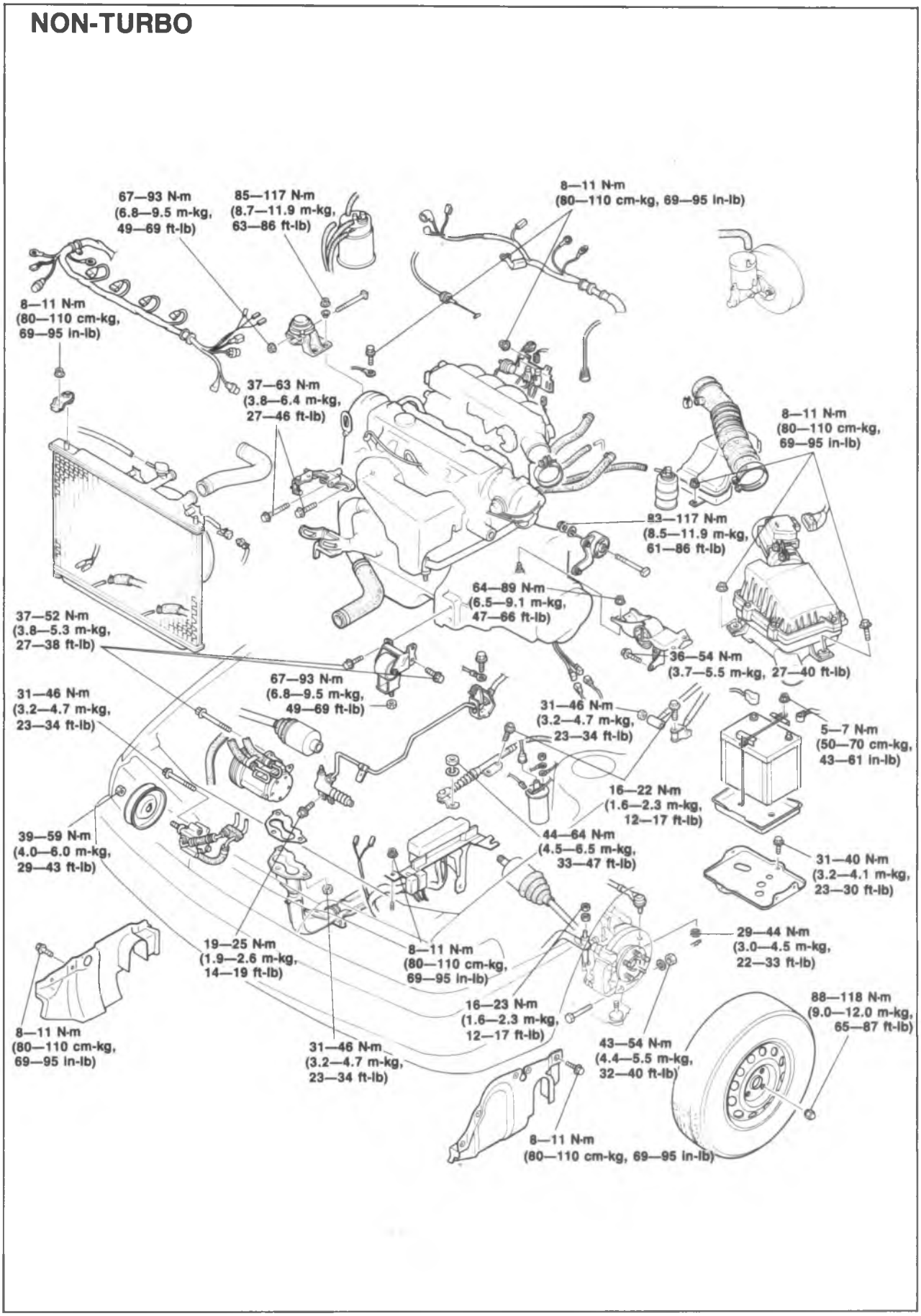

86U01X-218

Engine Mount

Install the engine mount.

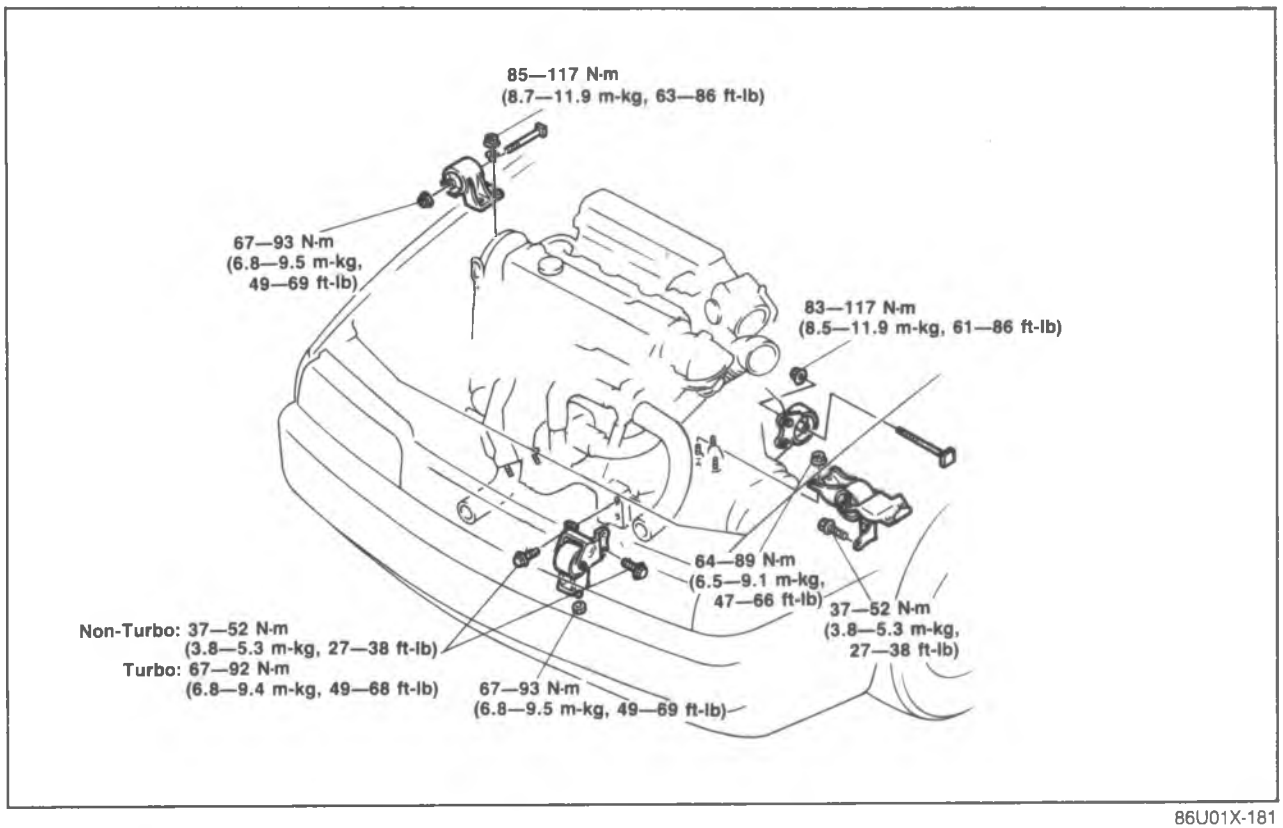

86U01X-181

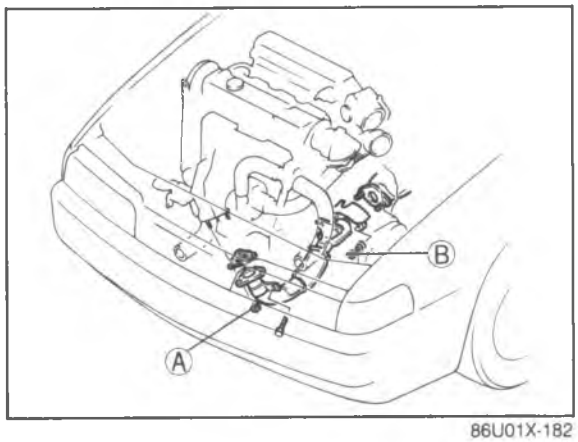

86U01X-182

Exhaust Pipe

1. Install the exhaust pipe.

Tightening torque:
Ⓐ : 31—46 N·m
(3.2—4.7 m-kg, 23—34 ft-lb)
Ⓑ : 64—89 N·m
(6.5—9.1 m-kg, 47—66 ft-lb)

2. Tighten the bracket bolt.

Tightening torque:
19—25 N·m (1.9—2.6 m-kg, 14—19 ft-lb)

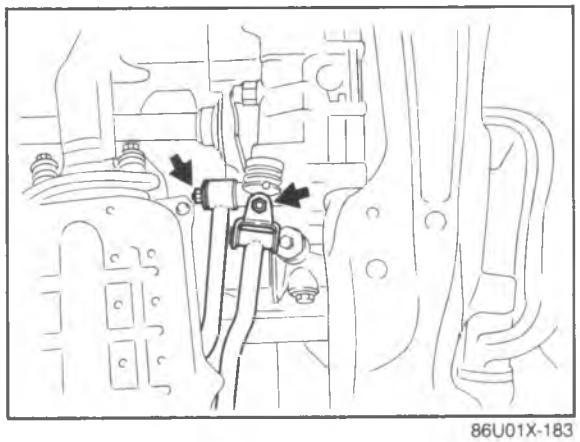

86U01X-183

Extension Bar (MTX)

Install the extension bar to the transaxle.

Tightening torque:
31—46 N·m (3.2—4.7 m-kg, 23—34 ft-lb)

Change Rod (MTX)

Install the change rod to the transaxle.

Tightening torque:
16—22 N·m (1.6—2.3 m-kg, 12—17 ft-lb)

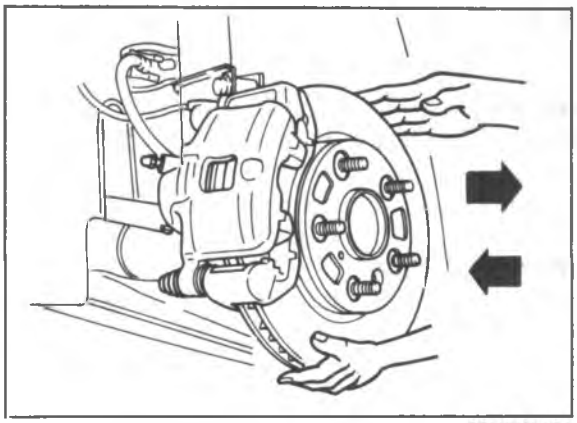

86U01X-184

Driveshaft

1. Apply grease to the end of the driveshaft.
2. Install the driveshaft and a new clip.

Caution

a) When installing the driveshaft, be careful not to damage the oil seal.

b) After installation, pull the front hub outward to confirm that the driveshaft is securely held by the clip.

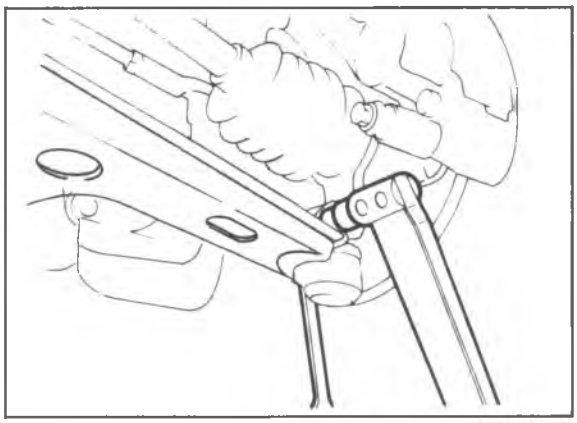

86U01X-185

Lower Arm

Install the lower arm ball-joint to the knuckle; then tighten the lock nut.

Tightening torque:
43—54 N·m (4.4—5.5 m-kg, 32—40 ft-lb)

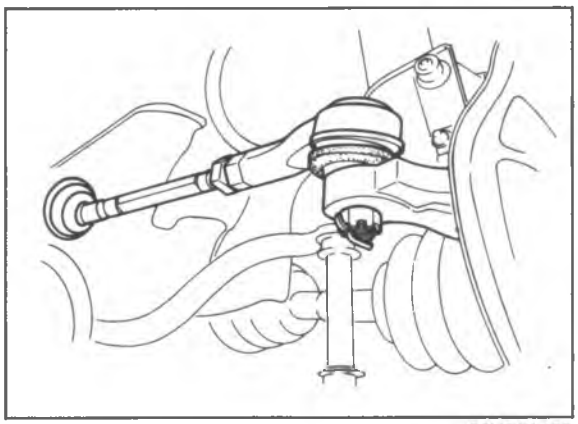

86U01X-186

Tie-Rod End

1. Install the tie-rod end to the knuckle.

Tightening torque:
29—44 N·m (3.0—4.5 m-kg, 22—33 ft-lb)

2. Install the cotter pin.

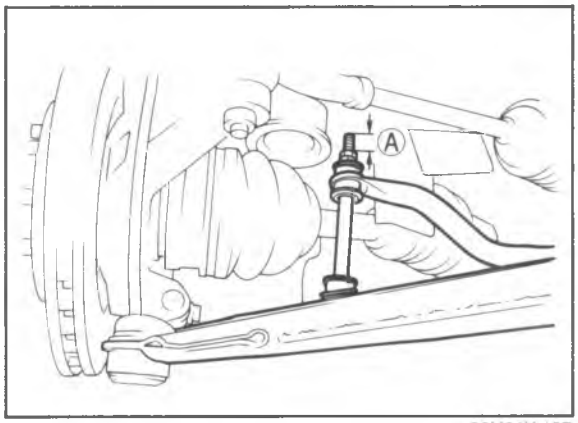

86U01X-187

Stabilizer Control Rod

Install and adjust the front stabilizer control rods.

Dimension A: 20.1 mm (0.79 in)

Tightening torque:
16—23 N·m (1.6—2.3 m-kg, 12—17 ft-lb)

Install the front wheel.

Tightening torque:
88—118 N·m (9.0—12.0 m-kg, 65—87 ft-lb)

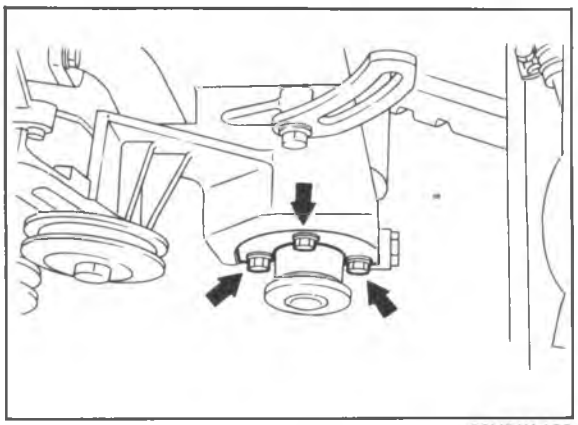

86U01X-188

P/S Oil Pump

1. Install the P/S oil pump.

   Tightening torque:
   31—46 N·m (3.2—4.7 m-kg, 23—34 ft-lb)

2. Tighten the pulley lock nut.

   Tightening torque:
   39—59 N·m (4.0—6.0 m-kg, 29—43 ft-lb)

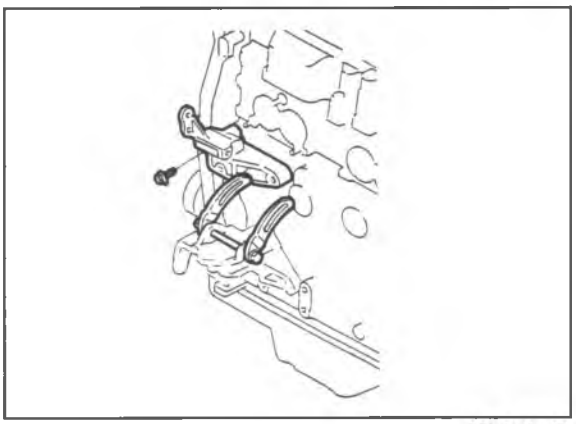

86U01X-189

A/C Compressor

1. Install the A/C compressor strap to the P/S oil pump bracket.

   Tightening torque:
   19—25 N·m (1.9—2.6 m-kg, 14—19 ft-lb)

2. Install the A/C compressor bracket.

   Tightening torque:
   37—63 N·m (3.8—6.4 m-kg, 27—46 ft-lb)

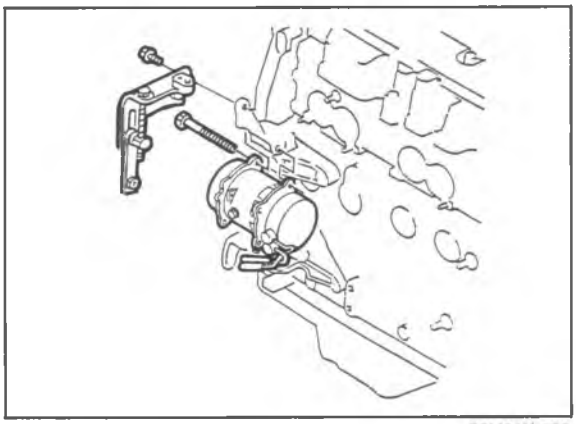

86U01X-190

3. Install the A/C compressor.
4. Install the A/C compressor upper bracket.

   Tightening torque:
   37—63 N·m (3.8—6.4 m-kg, 27—46 ft-lb)

5. Tighten to the lock nut and mounting bolts.

   Tightening torque:
   37—52 N·m (3.8—5.3 m-kg, 27—38 ft-lb)

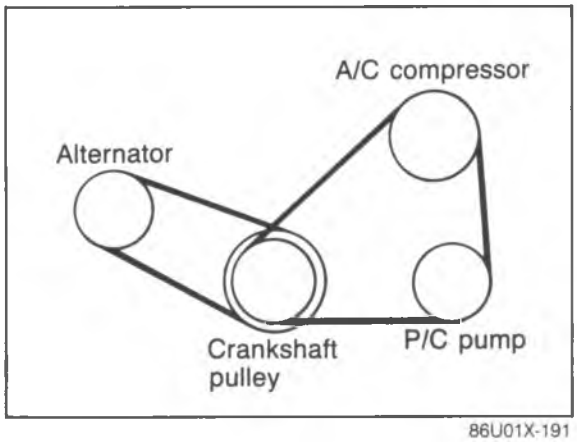

86U01X-191

Drive Belt

Install the drive belt and adjust the belt deflection. (Refer to page 1—6.)

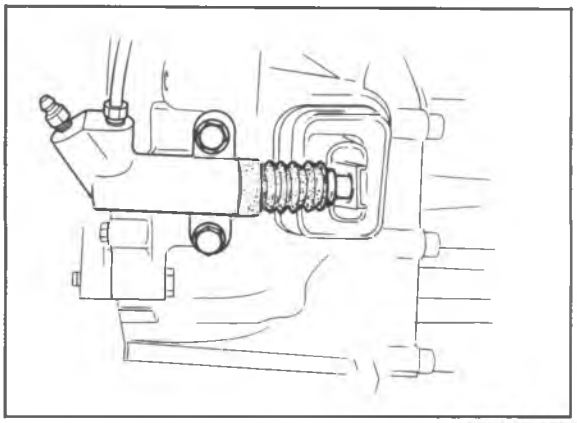

86U01X-192

Clutch Release Cylinder (MTX)
1. Set the pipe bracket in position.

Tightening torque:
8—11 N·m (80—110 cm-kg, 69—95 in-lb)

2. Install the clutch release cylinder.

Tightening torque:
19—25 N·m (1.9—2.6 m-kg, 14—19 ft-lb)

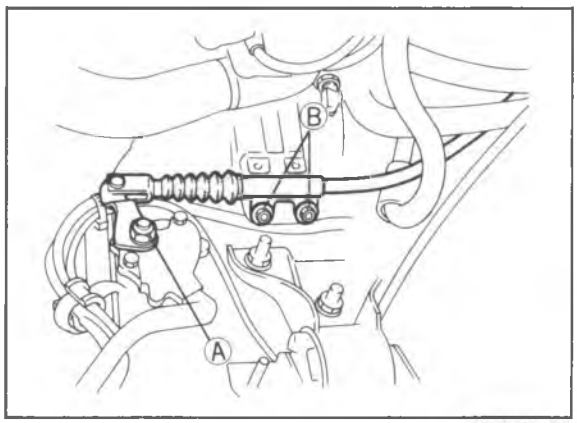

86U01X-193

Control Cable (ATX)
Install the control cable and adjust the shift selector position. (Refer to Section 7B.)

Tightening torque
Ⓐ: 44—64 N·m
(4.5—6.5 m-kg, 33—47 ft-lb)
Ⓑ: 16—23 N·m
(1.6—2.3 m-kg, 12—17 ft-lb)

Speedometer Cable
Install the speedometer cable.

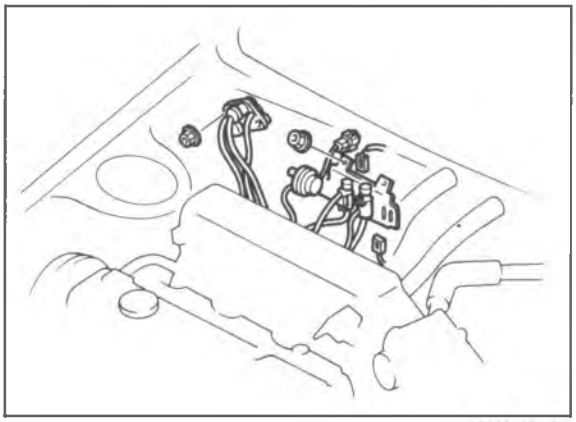

86U01X-194

Three-Way Solenoid Assembly
Install the three-way solenoid assembly.

Tightening torque:
8—11 N·m (80—110 cm-kg, 69—95 in-lb)

EGR Solenoid Assembly (Turbo)
Install the EGR solenoid assembly.

Tightening torque:
8—11 N·m (80—110 cm-kg, 69—95 in-lb)

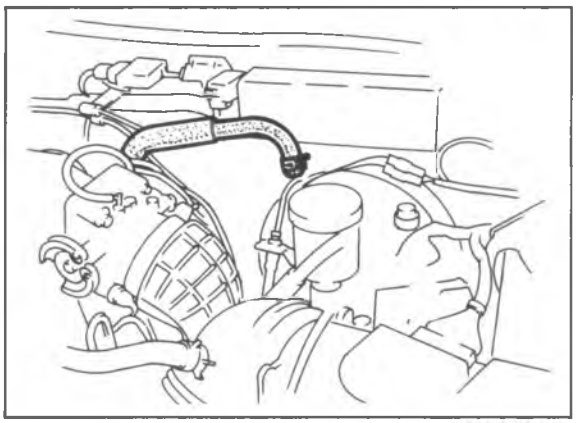

86U01X-195

Brake Vacuum Hose
Connect the brake vacuum hose.

Canister Hose
Connect the canister hoses.

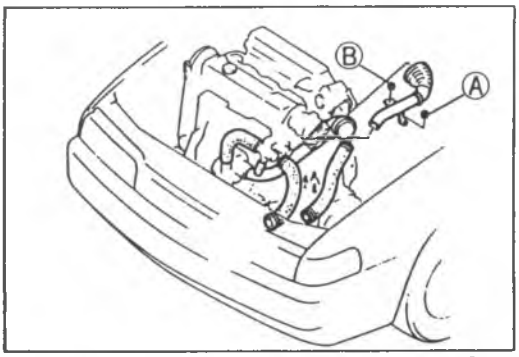

76F01C-043

Turbocharger Oil Pipe and Hose (Turbo)

1. Install the turbocharger pipe.

Tightening torque
Ⓐ: 64—89 N·m (6.5—9.1 m-kg, 47—66 ft-lb)
Ⓑ: 8—11 N·m (80—110 cm-kg, 69—95 in-lb)

2. Connect the turbocharger hoses.

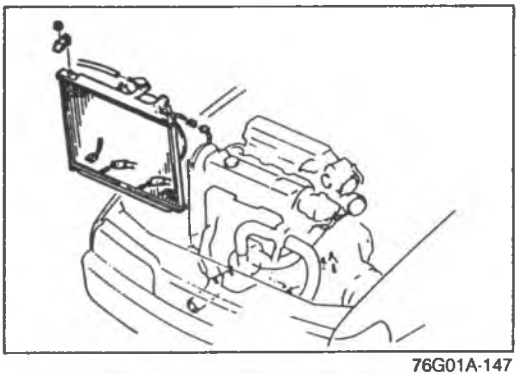

76G01A-147

Radiator

1. Install the radiator and cooling fan.

Tightening torque:
8—11 N·m (80—110 cm-kg, 69—95 in-lb)

2. Connect the radiator harness.
3. Connect the ATF hoses (ATX).

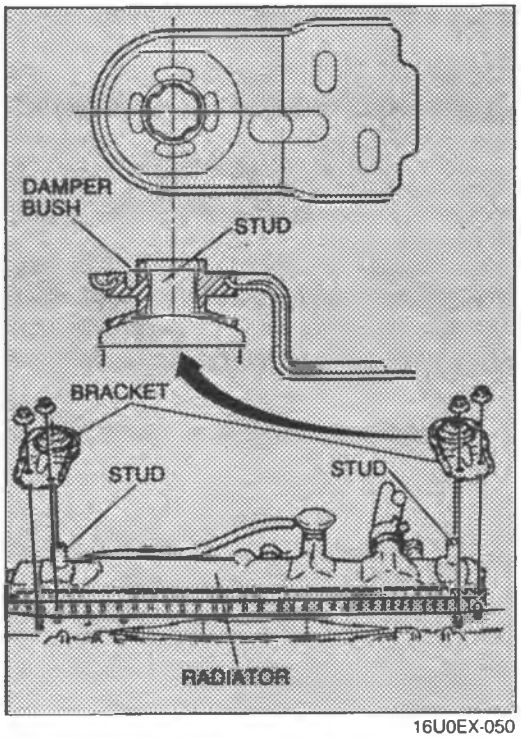

16U0EX-050

4. Connect the upper and lower radiator hoses.

Note
- **Position the hose clamp in the original location on the hose.**
- **Squeeze the clamp lightly with large pliers to ensure a good fit.**

Installation Notes
The damper bush on the bracket and the stud on the radiator should be centered as illustrated.
Align the center by moving the radiator and/or brackets.

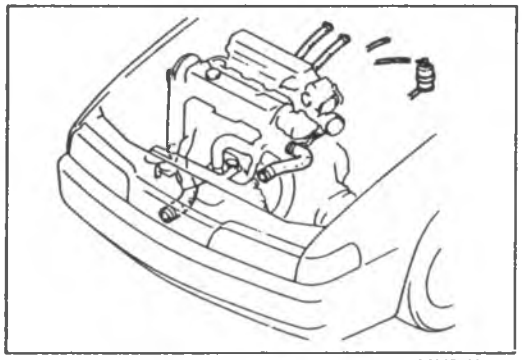

86U01X-199

Heater Hose and Fuel Hose

Connect the heater hoses and the fuel hoses.

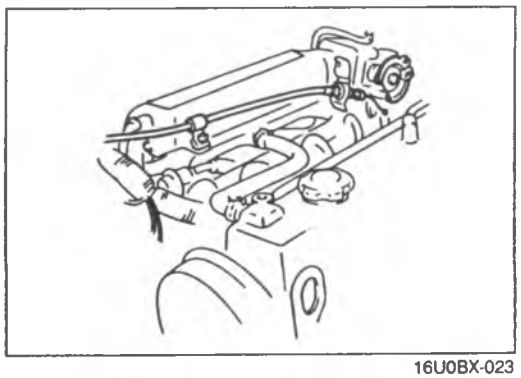

16U0BX-023

High-Tension Lead
Connect the high-tension lead to the ignition coil.

Accelerator Cable and Throttle Cable (ATX)
1. Install the accelerator cable and the throttle cable (ATX).
2. Check the deflection of the cable.

Deflection: 1—3mm (0.04—0.12 in)

Battery and Battery Carrier
1. Install the battery carrier.

Tightening torque:
9—13 N·m (90—130 cm-kg, 78—113 in-lb)

2. Install the fuse box.

Tightening torque:
8—11 N·m (80—110 cm-kg, 69—95 in-lb)

3. Install the battery tray and battery.

Tightening torque:
5—7 N·m (50—70 cm-kg, 43—61 in-lb)

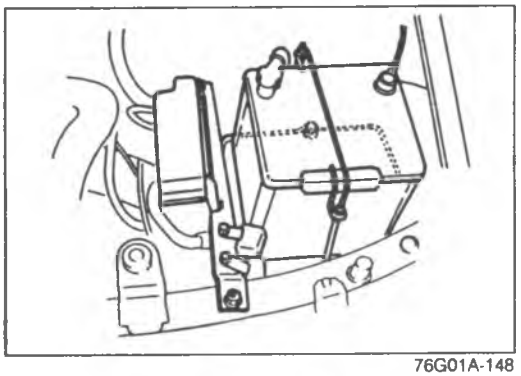

76G01A-148

Air Cleaner Assembly
1. Install the air cleaner assembly.

Tightening torque:
16—27 N·m (1.6—2.8 m-kg, 12—20 ft-lb)

2. Connect the air flow sensor connector, air intake pipe, and EGR air hose.

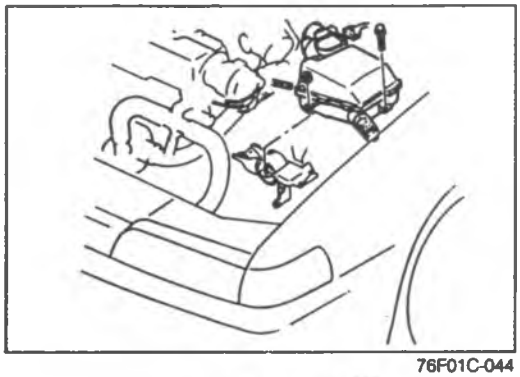

76F01C-044

Engine Oil
Add the specified amount and type of engine oil. (Refer to Section D.)

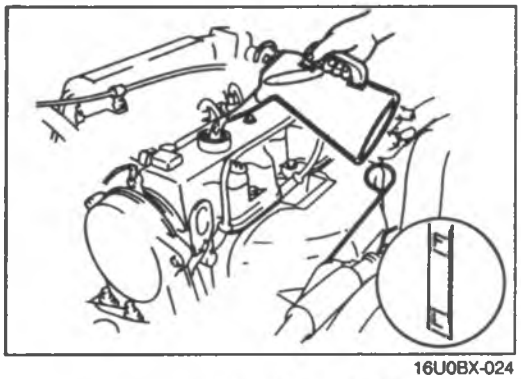

16U0BX-024

Coolant
Close the drain plug, fill the radiator and reservoir tank with the specified amount and type of coolant. (Refer to Section E.)

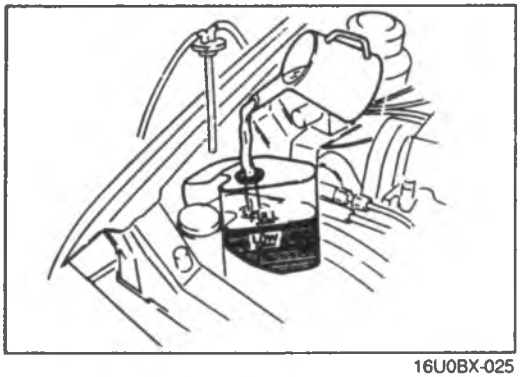

16U0BX-025

Check Engine Condition
1. Check for leaks.
2. Perform engine adjustments if necessary.
3. Perform a road test.
4. Recheck the oil and coolant levels.

LUBRICATION SYSTEM

OUTLINE ..... 2— 2
LUBRICATION CIRCUIT ..... 2— 2
SPECIFICATIONS ..... 2— 3
TROUBLESHOOTING GUIDE ..... 2— 3
INSPECTION ..... 2— 4
ENGINE OIL ..... 2— 4
OIL PRESSURE ..... 2— 4
ENGINE OIL ..... 2— 4
REPLACEMENT ..... 2— 4
OIL FILTER ..... 2— 5
REPLACEMENT ..... 2— 5
OIL COOLER ..... 2— 5
REMOVAL AND INSTALLATION ..... 2— 5
OIL PAN ..... 2— 6
REMOVAL ..... 2— 6
INSPECTION ..... 2— 7
INSTALLATION ..... 2— 7
OIL PUMP ..... 2— 8
REMOVAL ..... 2— 8
DISASSEMBLY ..... 2— 9
INSPECTION ..... 2— 9
ASSEMBLY ..... 2—10
INSTALLATION ..... 2—10

86U02X-001

OUTLINE

LUBRICATION CIRCUIT

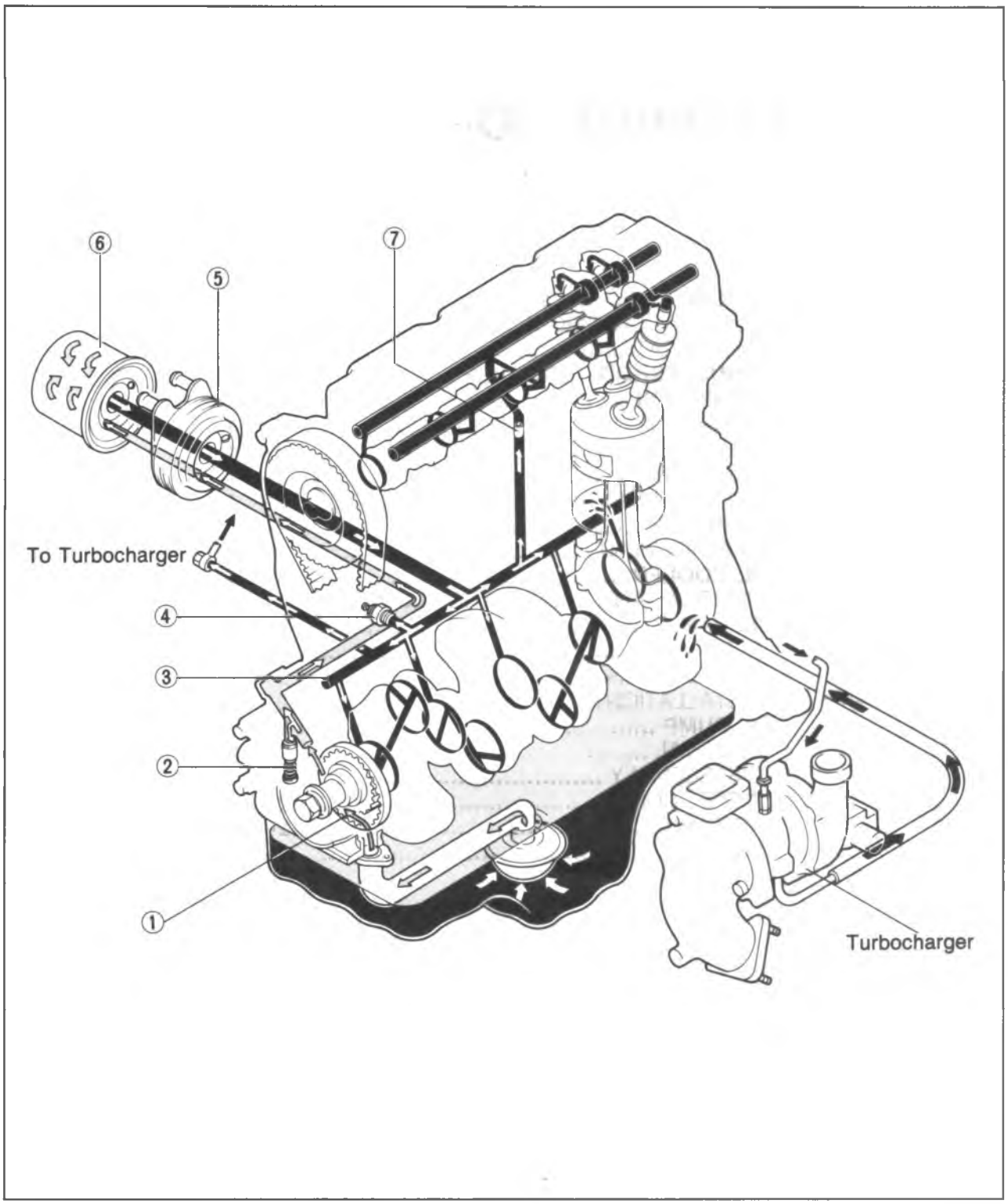

86U02X-003

1. Oil pump
2. Pressure regulator valve
3. Main gallery
4. Oil pressure switch
5. Oil cooler (only Turbo)
6. Oil filter
7. Oil control plug

SPECIFICATIONS

Engine \ Model			F2	
			Turbo	Non-Turbo
Lubrication system			Force-fed	
Oil pump	Type		Trochoid gear	
	Regulated pressure	kPa (kg/cm², psi)	392 (4.0, 57)	
Oil filter	Type		Full-flow, paper element	
	Relief pressure differential	kPa (kg/cm², psi)	98 (1.0, 14)	
Oil cooler	Type		Water-cooled, 4 layer	
Oil warning pressure		kPa (kg/cm², psi)	29 (0.3, 4.3)	
Oil capacity	Total (dry engine)	liters (US qt, Imp qt)	4.6 (4.9, 4.0)	
	Oil pan	liters (US qt, Imp qt)	3.9 (4.1, 3.4)	
	Oil filter	liters (US qt, Imp qt)	0.3 (0.32, 0.26)	
Engine oil (API service)			SF	SD, SE, or SF

86U02X-002

Recommended SAE Viscosity

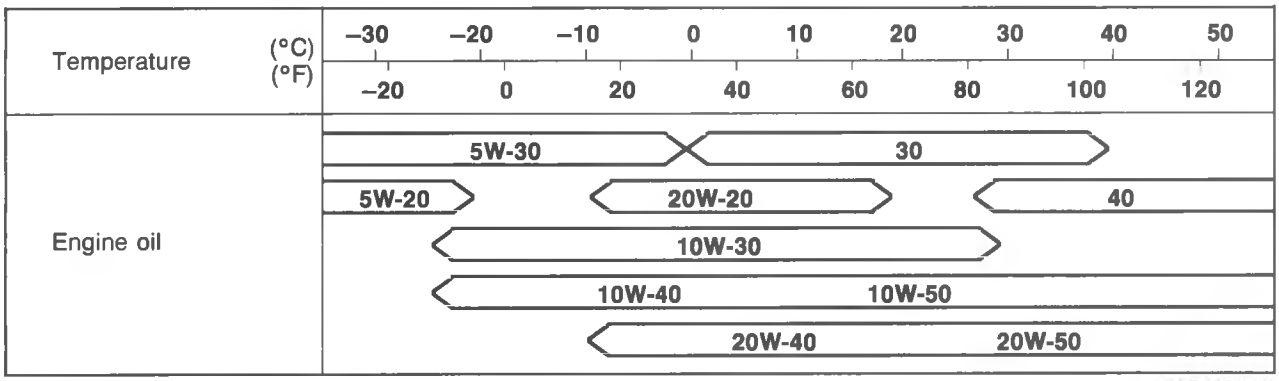

Temperature range anticipated before next oil change, °C(°F)

63G02D-303

TROUBLESHOOTING GUIDE

Problem	Possible Cause	Remedy	Page
Engine hard starting	Improper engine oil Insufficient engine oil	Replace Add oil	2— 4 2— 4
Excessive oil consumption	Oil working up or working down Oil leakage	Refer to Section 1 Repair	 —
Oil pressure drop	Insufficient oil Oil leakage Worn or damaged oil pump gear Worn plunger (inside oil pump) or weak spring Clogged oil strainer Excessive main bearing or connecting rod bearing clearance	Add oil Repair Replace Replace Clean Refer to Section 1	2— 4 — 2— 9 2— 9 —
Warning lamp illuminated while engine running	Oil pressure drop Malfunction of oil pressure switch Malfunction of electrical system	As described above Refer to Section 15 Refer to Section 15	—

86U02X-025

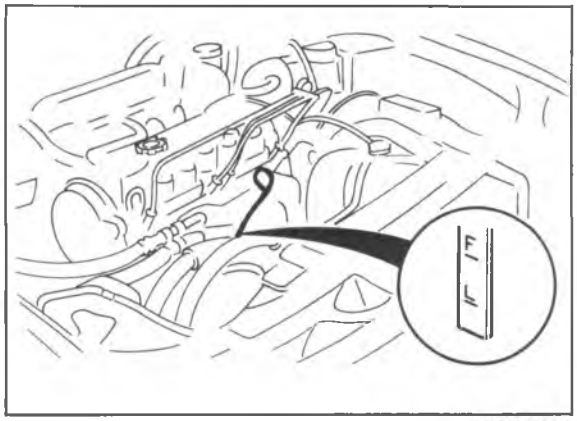

86U02X-004

INSPECTION

ENGINE OIL

1. Be sure the vehicle is on level ground.
2. Warm up the engine to normal operating temperature and stop it.
3. Wait for five minutes.
4. Remove the oil level gauge and check the oil level and condition.
5. Add or replace oil if necessary.

Note
The distance between the L and F marks on the level gauge represents 1.0 liter (1.06 US qt, 0.88 Imp qt).

OIL PRESSURE

1. Remove the oil pressure switch.

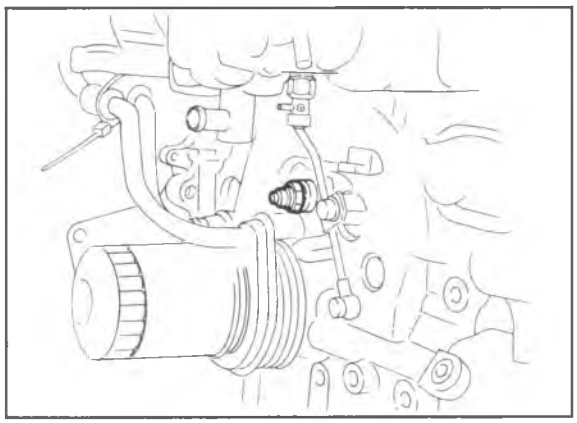

69G02A-006

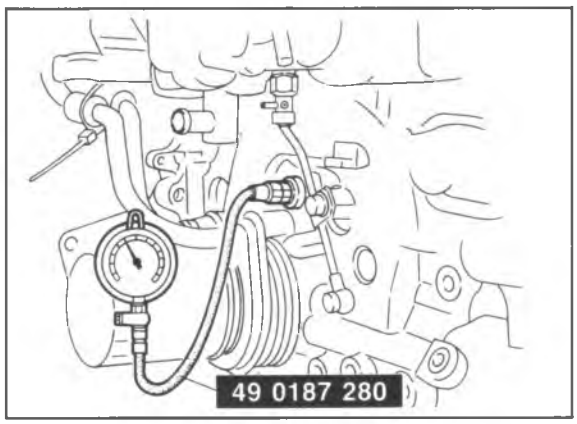

86U02X-005

2. Screw the **SST** into the pressure switch installation hole.
3. Warm up the engine to normal operating temperature.
4. Run the engine at **3,000 rpm**, and note the gauge reading.

Standard oil pressure:
294—392 kPa (3.0—4.0 kg/cm^2, 43—57 psi)

5. If the pressure is not as specified, check for the cause, and repair if necessary.
(Refer to Troubleshooting Guide.)

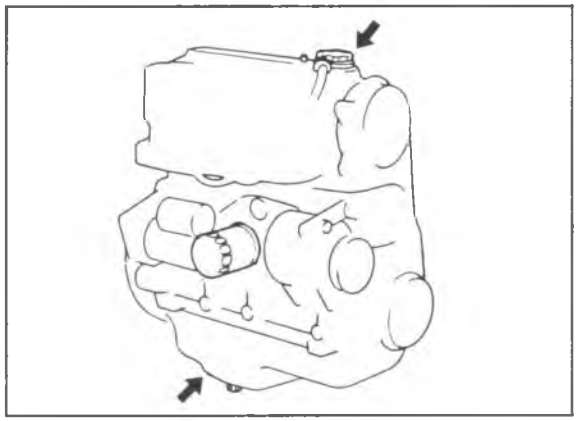

86U02X-006

ENGINE OIL

REPLACEMENT

1. Warm up the engine to the normal operating temperature and stop it.
2. Remove the oil filler cap and the oil pan drain plug.
3. Drain the oil into a suitable container.

Warning
Be careful when draining, the oil is very hot.

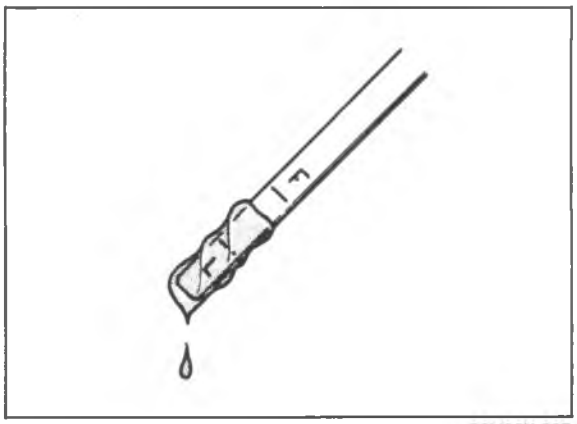

86U02X-007

3. Install the drain plug and a new gasket.
4. Refill the engine with the specified type and amount of oil.
5. Refit the oil filler cap.

Oil pan capacity:
3.9 liters (4.1 US qt, 3.4 Imp qt)

6. Recheck the oil level after the engine has been run.

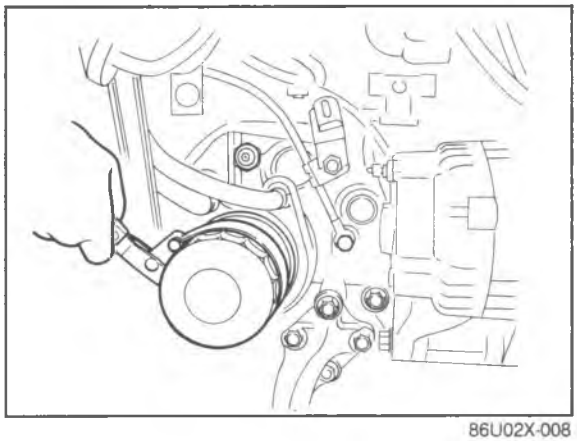
86U02X-008

OIL FILTER

REPLACEMENT

1. Remove the oil filter with a suitable wrench.
2. Use a clean rag to wipe off the mounting surface on the engine.

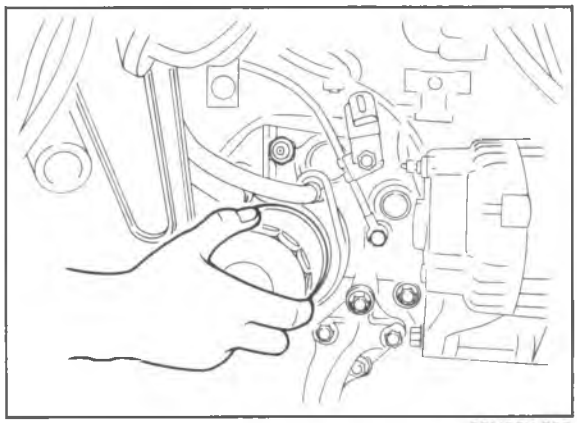
86U02X-009

3. Apply a small amount of engine oil to the rubber seal of the new filter.
4. Install the oil filter and tighten it by hand only. Do not use a wrench.
5. Start the engine and inspect around the filter seal for leaks.
6. Check the oil level and add oil if necessary.

Oil filter capacity:
0.30 liters (0.32 US qt, 0.26 Imp qt)

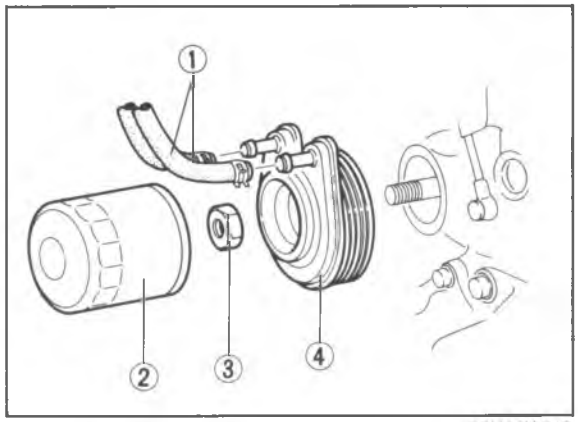

86U02X-010

OIL COOLER (Only Turbo)

REMOVAL AND INSTALLATION

Remove in the sequence shown in the figure.
Install in the reverse order of removal.

1. Water hose
2. Oil filter
3. Nut
4. Oil cooler

Nut tightening torque:
29—39 N·m (3.0—4.0 m-kg, 22—29 ft-lb)

OIL PAN

REMOVAL

1. Disconnect the negative battery cable.
2. Drain the engine oil.
3. Remove in the sequence shown in the figure, for the specially marked parts referring to removal note.

86U02X-011

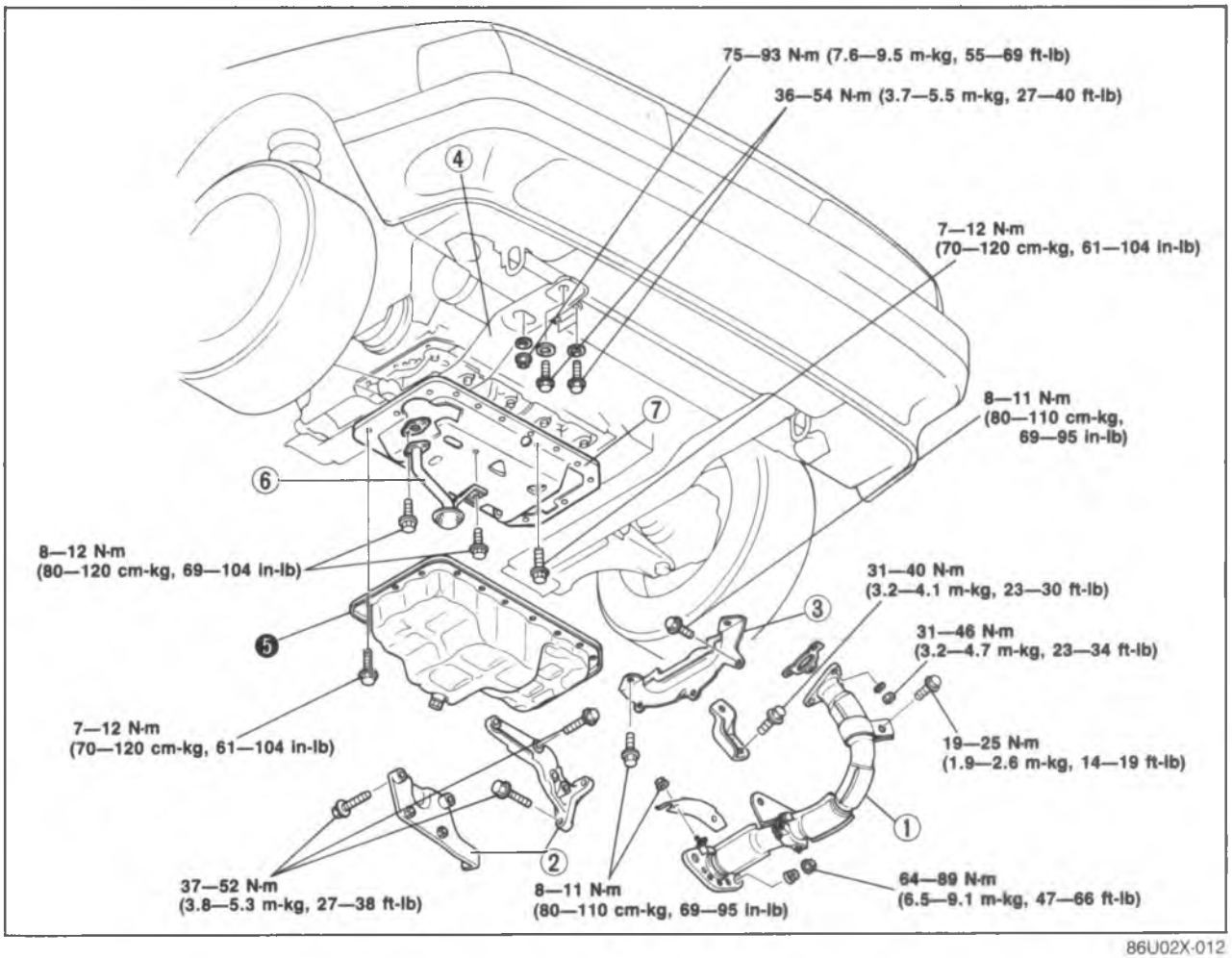

86U02X-012

1. Exhaust pipe
2. Gusset plate (MTX)
3. Clutch housing under cover (MTX)
4. Sub frame (RH)
5. Oil pan
6. Oil strainer
7. Stiffener

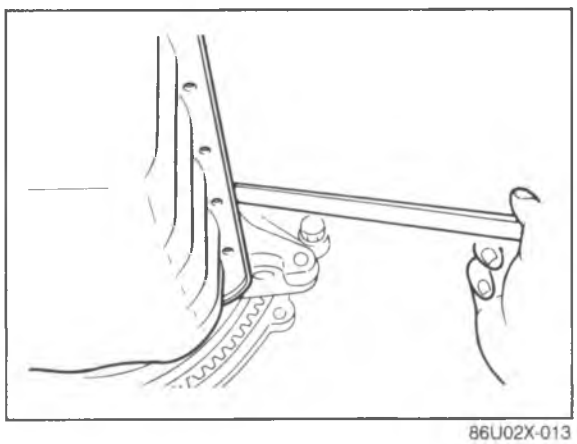

86U02X-013

Removal note
Oil pan

1. Remove the oil pan mounting bolts.
2. Insert a scraper or a suitable tool between the oil pan and the stiffener to separate them.
3. Remove the oil pan.
4. Remove the oil strainer and stiffener from the engine.

Caution
Do not bend the oil pan when prying loose.

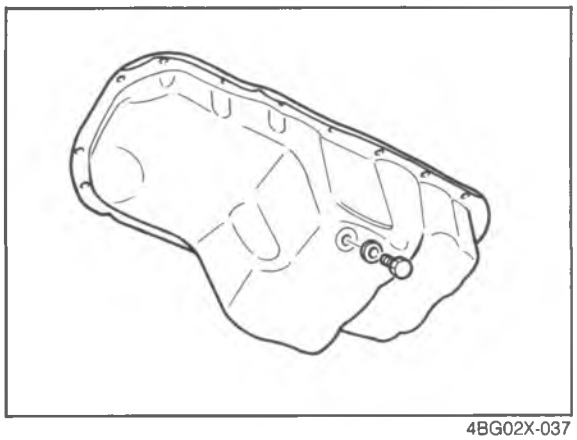

4BG02X-037

INSPECTION

Check the following points. Repair or replace if necessary.

1. Cracks, deformation, damage
2. Damaged drain plug threads

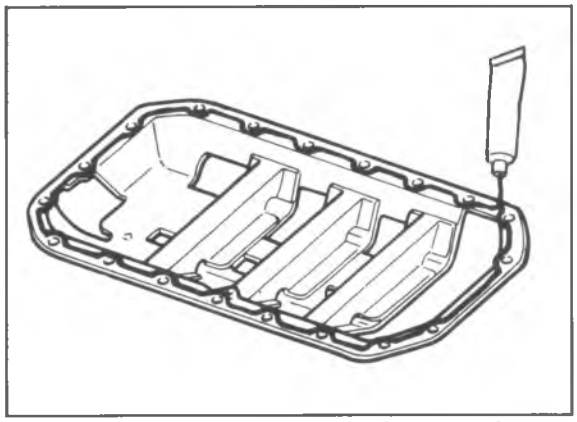

76G02X-603

INSTALLATION

Install in the reverse order of removal referring to the installation note.

Installation Note

Stiffener, oil strainer, and oil pan

1. Remove any dirt or other material from the contact surfaces.
2. Apply silicon sealant to the stiffener around inside of the bolt holes and over lap the ends.

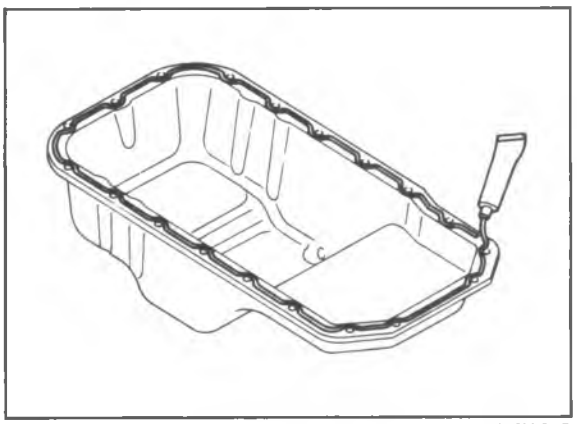

86U02X-015

3. Apply a continuous bead of silicon sealant to the oil pan around inside of the bolt holes and over lap the ends.

   Caution
   Secure the stiffener and oil pan within 30 minutes after applying the sealant.

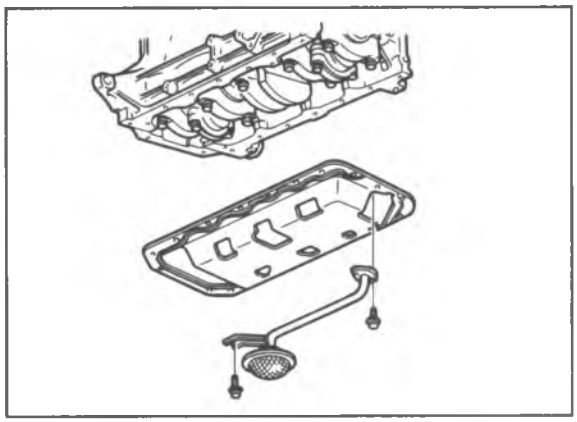

86U02X-016

4. Install the stiffener; then the oil strainer and a new gasket.

   Oil strainer tightening torque:
   8—12 N·m (80—120 cm-kg, 69—104 in-lb)

5. Install the oil pan.

   Tightening torque:
   7—12 N·m (70—120 cm-kg, 61—104 in-lb)

Steps After Installation

1. Supply the specified amount and type of oil.
2. Start the engine and check for leakage.

OIL PUMP

REMOVAL

1. Disconnect the negative battery cable.
2. Drain the engine oil.
3. Remove in the sequence shown in the figure, for the specially marked parts referring to removal note.

86U02X-017

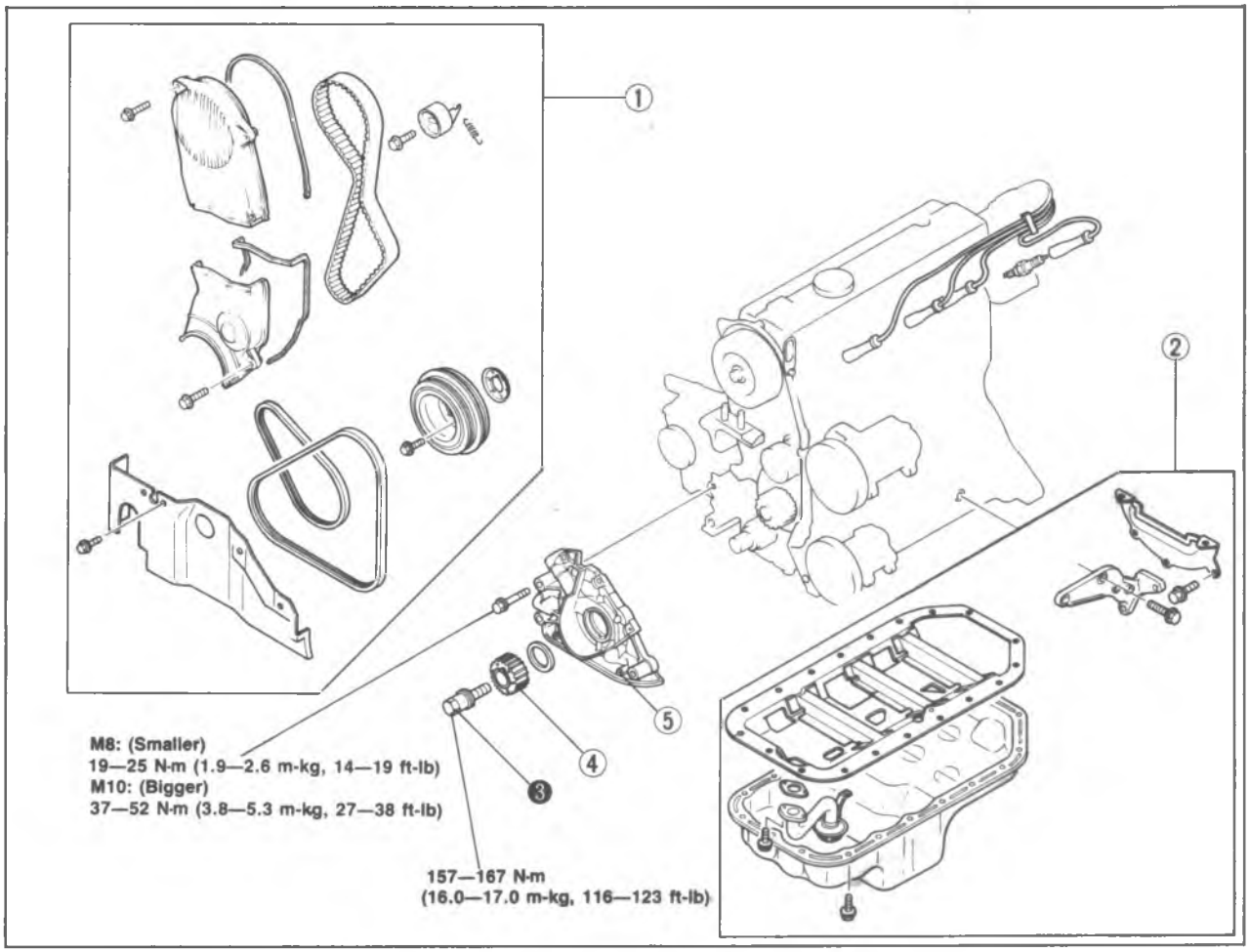

86U02X-018

1. Timing belt (Refer to Section 1)
2. Oil pan (Refer to page 2—6.)
3. Timing belt pulley lock bolt
4. Timing belt pulley
5. Oil pump

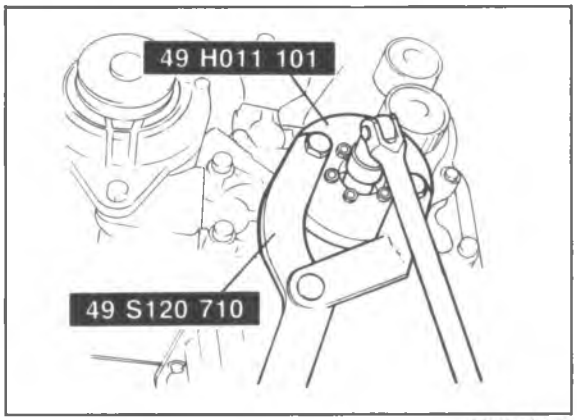

86U02X-019

Removal note
Timing belt pulley lock bolt
Hold the timing belt pulley with the **SST** and remove the lock bolt.

DISASSEMBLY

Disassemble in the sequence shown in the figure.

69G02B-012

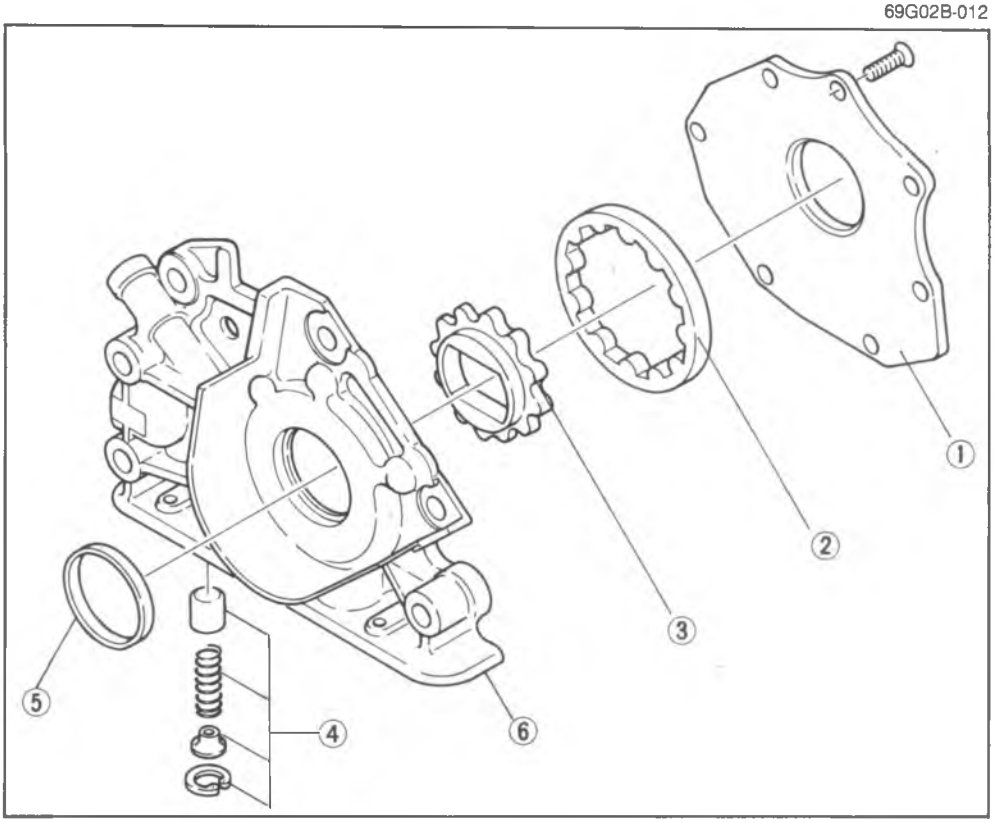

69G02B-013

1. Pump cover
2. Outer rotor
3. Inner rotor
4. Pressure relief valve
5. Oil seal
6. Oil pump body

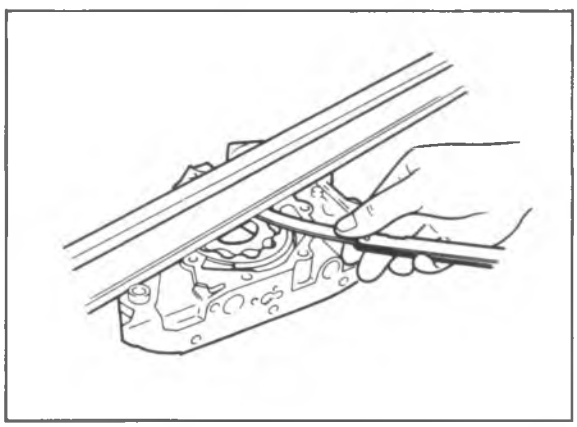

86U02X-020

INSPECTION

1. Check the following and replace any faulty parts.
   (1) Distorted or damaged oil pump body or cover
   (2) Worn or damaged plunger
   (3) Weak or broken plunger spring
2. Measure the side clearance.

   Clearance:
   0.10 mm (0.004 in) max.

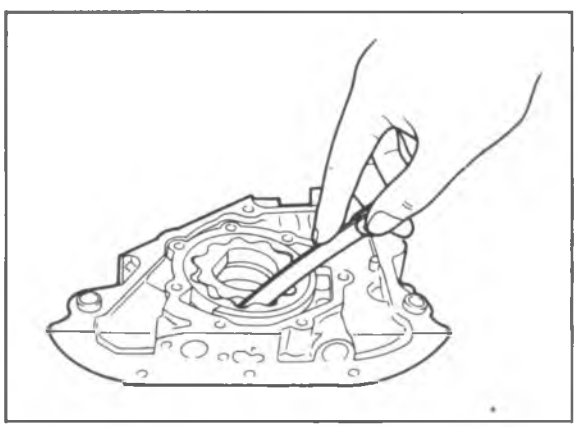

69G02B-015

3. Measure the tooth tip clearance.

   Clearance: 0.18 mm (0.007 in) max.

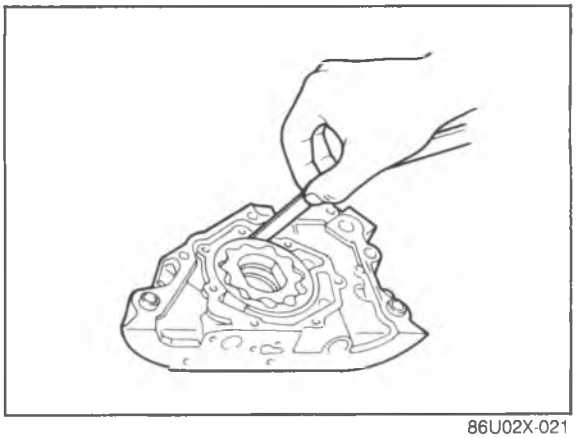

86U02X-021

4. Measure the outer gear to pump body clearance.

Clearance: 0.20 mm (0.008 in) max.

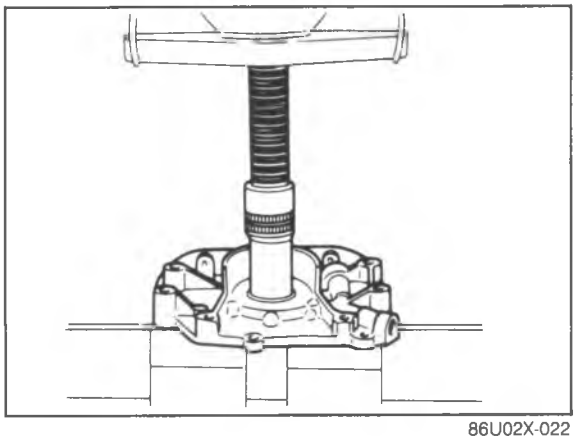

86U02X-022

ASSEMBLY

Assemble the pump as follows.

Oil Seal

1. Apply engine oil to the pump body and the outside of the new oil seal.
2. Press in the oil seal.

Pressure Relief Valve

1. Install the plunger and spring in the pump body.
2. Fit the snap ring.

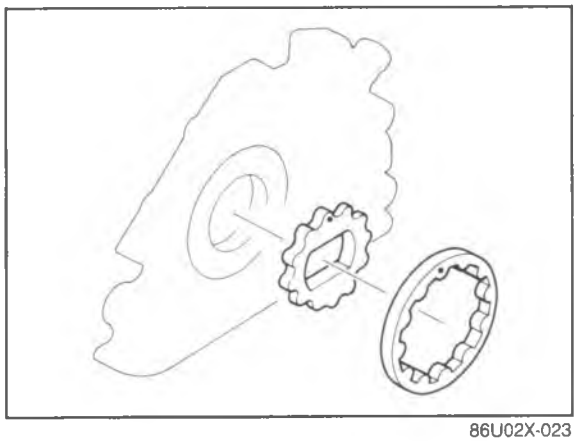

86U02X-023

Outer and Inner Rotor

Install the rotors with the dimples facing the pump cover.

Oil Pump Cover

1. Apply thread locking compound to the cover mounting screws' threads.
2. Attach the oil pump cover to the body.

Tightening torque:
6—9 N·m (60—90 cm-kg, 52—78 in-lb)

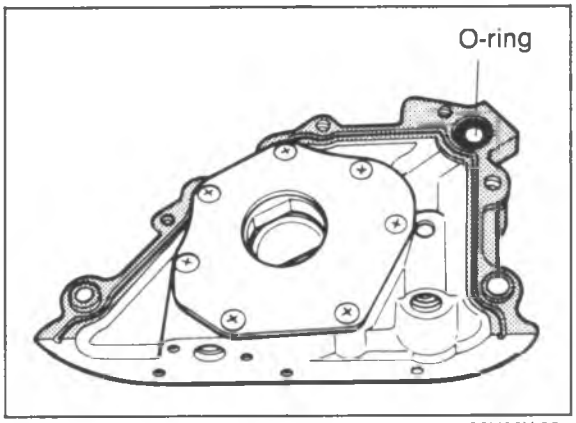

86U02X-024

INSTALLATION

Install in the reverse order of removal referring to installation note.

Installation note

Oil pump

1. Apply grease to a new O-ring and install it in the oil pump body.
2. Apply silicon sealant to the shaded area as shown in the figure.
3. Apply engine oil to the oil seal lip.

COOLING SYSTEM

OUTLINE ..... 3— 2
COOLANT FLOW CHART ..... 3— 2
SPECIFICATIONS ..... 3— 3
TROUBLESHOOTING GUIDE ..... 3— 3
COOLANT ..... 3— 4
INSPECTION ..... 3— 4
REPLACEMENT ..... 3— 4
RADIATOR CAP ..... 3— 5
INSPECTION ..... 3— 5
RADIATOR ..... 3— 6
REMOVAL AND INSTALLATION ..... 3— 6
INSPECTION ..... 3— 6
WATER PUMP ..... 3— 7
REMOVAL ..... 3— 7
INSPECTION ..... 3— 8
INSTALLATION ..... 3— 8
THERMOSTAT ..... 3— 9
REMOVAL ..... 3— 9
INSPECTION ..... 3— 9
INSTALLATION ..... 3— 9
ELECTRIC FAN ..... 3—10
SYSTEM CIRCUIT ..... 3—10
CIRCUIT INSPECTION ..... 3—10
FAN MOTOR ..... 3—11
WATER THERMO SWITCH ..... 3—12

86U03X-001

OUTLINE

COOLANT FLOW CHART

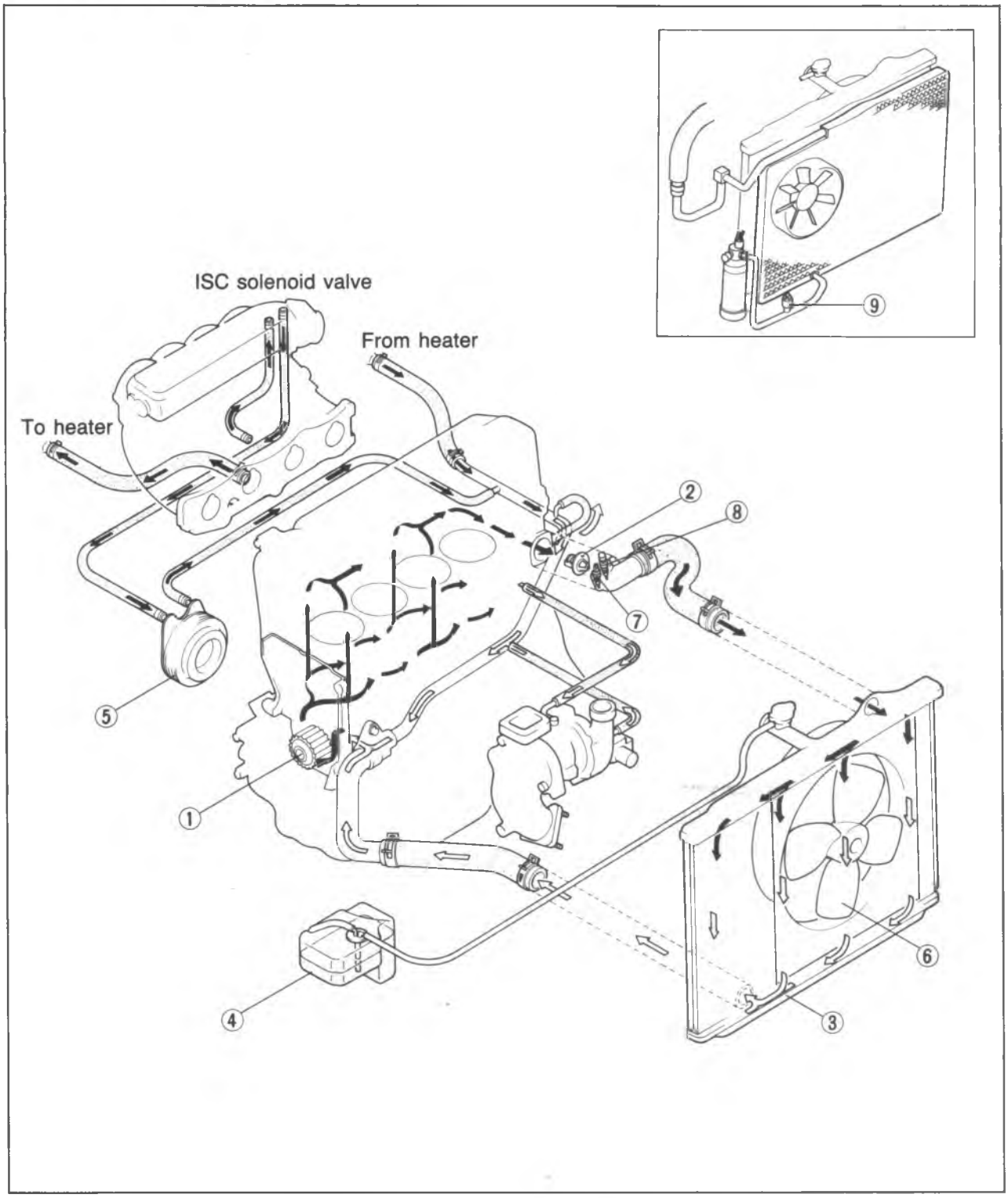

86U03X-027

1. Water pump
2. Thermostat
3. Radiator
4. Coolant reservoir
5. Oil cooler (only Turbo)
6. Electric fan
7. No.1 water thermo switch
8. No.2 water thermo switch
9. Pressure switch

SPECIFICATIONS

Cooling system				Water-cooled, forced circulation
Coolant capacity liters (US qt, Imp qt)		With heater		7.5 (7.9, 6.6)
		Without heater		6.9 (7.3, 6.1)
Water pump	Type			Centrifugal, timing belt driven
	Water seal			Unified seal
Thermostat	Type			Wax
	Opening temperature °C(°F)			86.5—89.5 (188—193)
	Full-open temperature °C(°F)			100 (212)
	Full-open lift mm (in)			8.5 (0.33)
Radiator	Type			Corrugated
	Cap valve opening pressure kPa (kg/cm², psi)			74—103 (0.75—1.05, 11—15)
Electric fan	Capacity W	Turbo	MTX	80
			ATX	160
		Non-Turbo	MTX	80
			ATX	120
	Number of blade			4
	Outer diameter of blade mm (in)		MTX	320 (12.6)
			ATX	340 (13.4)

86U03X-002

TROUBLESHOOTING GUIDE

Problem	Possible Cause	Remedy	Page
Overheating	Insufficient coolant	Add	3— 4
	Coolant leakage	Repair	—
	Radiator fins clogged	Clean	3— 6
	Radiator cap malfunction	Replace	3— 5
	Electric fan malfunction	Repair	3—11
	Thermostat malfunction	Replace	3—10
	Water passage clogged	Clean	3— 4
	Water pump malfunction	Repair or replace	3— 8
Corrosion	Impurities in coolant	Replace	3— 4

86U03X-003

86U03X-004

COOLANT

INSPECTION

Coolant Level (Engine cold)

1. Check that the coolant level is near the radiator inlet port.
2. Check that the coolant level in the coolant reservoir is between the FULL and Low marks.
   Add coolant if necessary.

Warning

a) Never remove the radiator cap while the engine is hot.

b) Wrap a thick cloth around the cap when removing it.

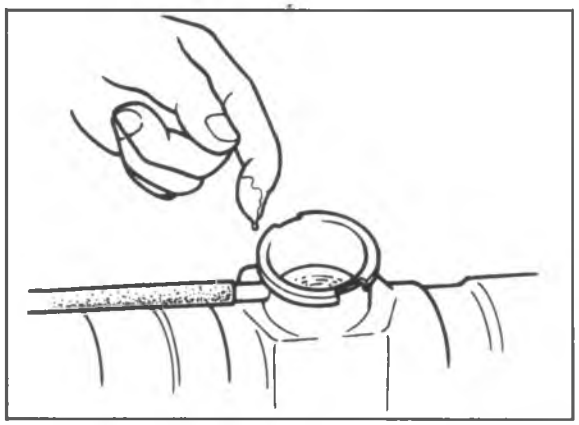

69G03A-006

Coolant Quality

1. Check that there is no build-up of rust or scales around the radiator cap or radiator filler neck.
2. Check that coolant is free from oil.
3. Replace the coolant, if necessary.

86U03X-005

Coolant Leakage

1. Connect a tester and **SST** to the radiator inlet port.
2. Apply **103 kPa (1.05 kg/cm^2, 15 psi)** pressure to the system.
3. Check that the pressure is held.
   If not, check for coolant leakage.

Warning

When removing either the radiator cap or the tester, loosen it slowly until the pressure in the radiator is released, and then remove it.

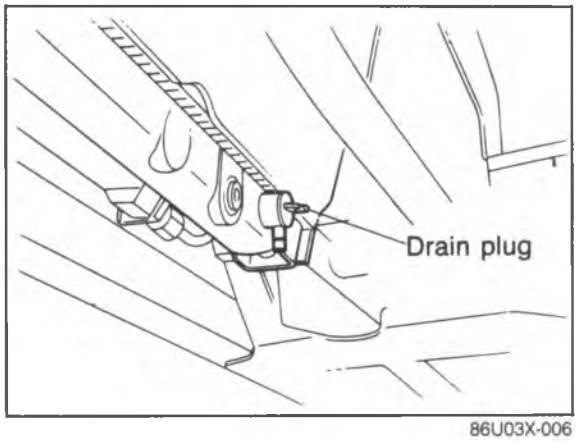

86U03X-006

REPLACEMENT

1. Remove the radiator cap and loosen the drain plug.
2. Drain the coolant into a suitable container.

Warning

a) Never open the radiator cap while the engine is hot.

b) Wrap a thick cloth around the cap when loosening.

c) Use caution when draining hot coolant.

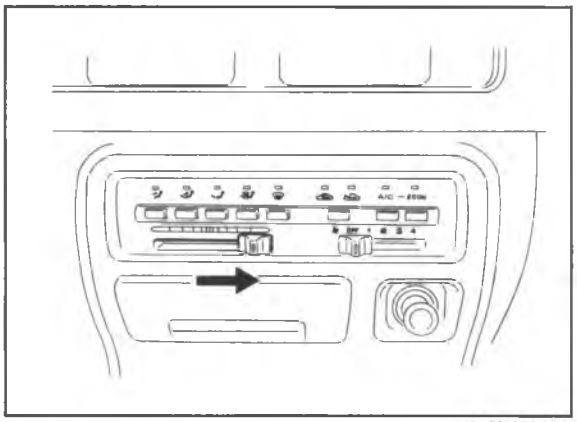

86U03X-028

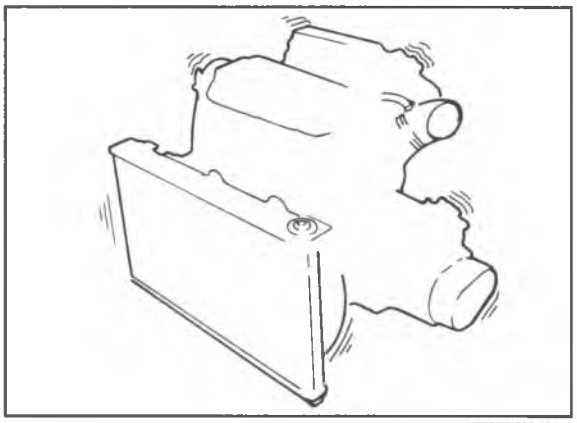

86U03X-007

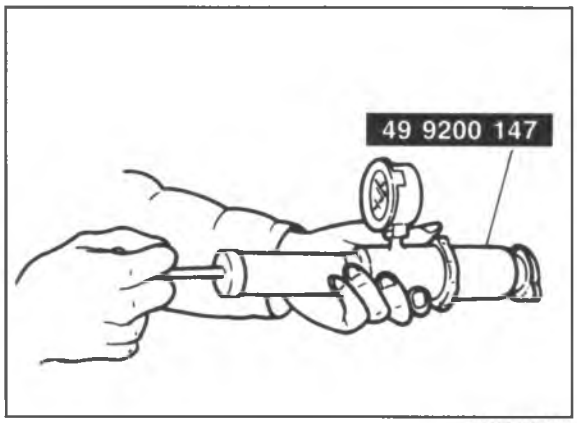

86U03X-008

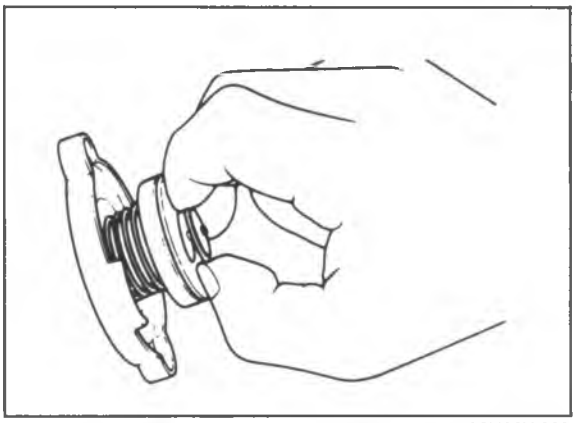

86U03X-009

3. Set the heater control switch to the maximum heat position.
4. Flush the cooling system with water until all traces of color are gone, then let the system drain completely.
5. Fill with the proper mixture and amount of ethylene glycol-based coolant.

Caution

a) Do not use alcohol- or methanol-based coolant.

b) Use only soft (demineralized) water in the coolant mixture.

Anti-freeze solution mixture percentage

Protection	Volume percentage		Gravity at 20°C (68°F)
	Solution	Water	
Above –16°C (3°F)	35	65	1.054
Above –26°C (–15°F)	45	55	1.066
Above –40°C (–40°F)	55	45	1.078

6. Run the engine at idle with the radiator cap removed. Let any air bleed from the system, and add more coolant.
7. Install the radiator cap, and inspect all connections for leakage.

RADIATOR CAP

INSPECTION

Radiator Cap Valve

1. Remove foreign material (such as water residue) from between the radiator cap valve and the valve seat.
2. Attach the radiator cap to a tester with the **SST**. Apply pressure gradually to **74—103 kPa (0.75—1.05 kg/cm^2, 11—15 psi)**.
3. Wait about 10 seconds; then check that the pressure has not decreased.

Negative Pressure Valve

1. Pull the negative-pressure valve to open it. Check that it closes completely when released.
2. Check for damage on the contact surfaces, and for cracked or deformed seal packing.
3. Replace the radiator cap if necessary.

RADIATOR

REMOVAL AND INSTALLATION

1. Drain the engine coolant.
2. Remove in the sequence shown in the figure.
3. Install in the reverse order of removal.

Note
a) Position the hose clamp in the original location on the hose.
b) Squeeze the clamp lightly with large pliers to ensure a good fit.

86U03X-010

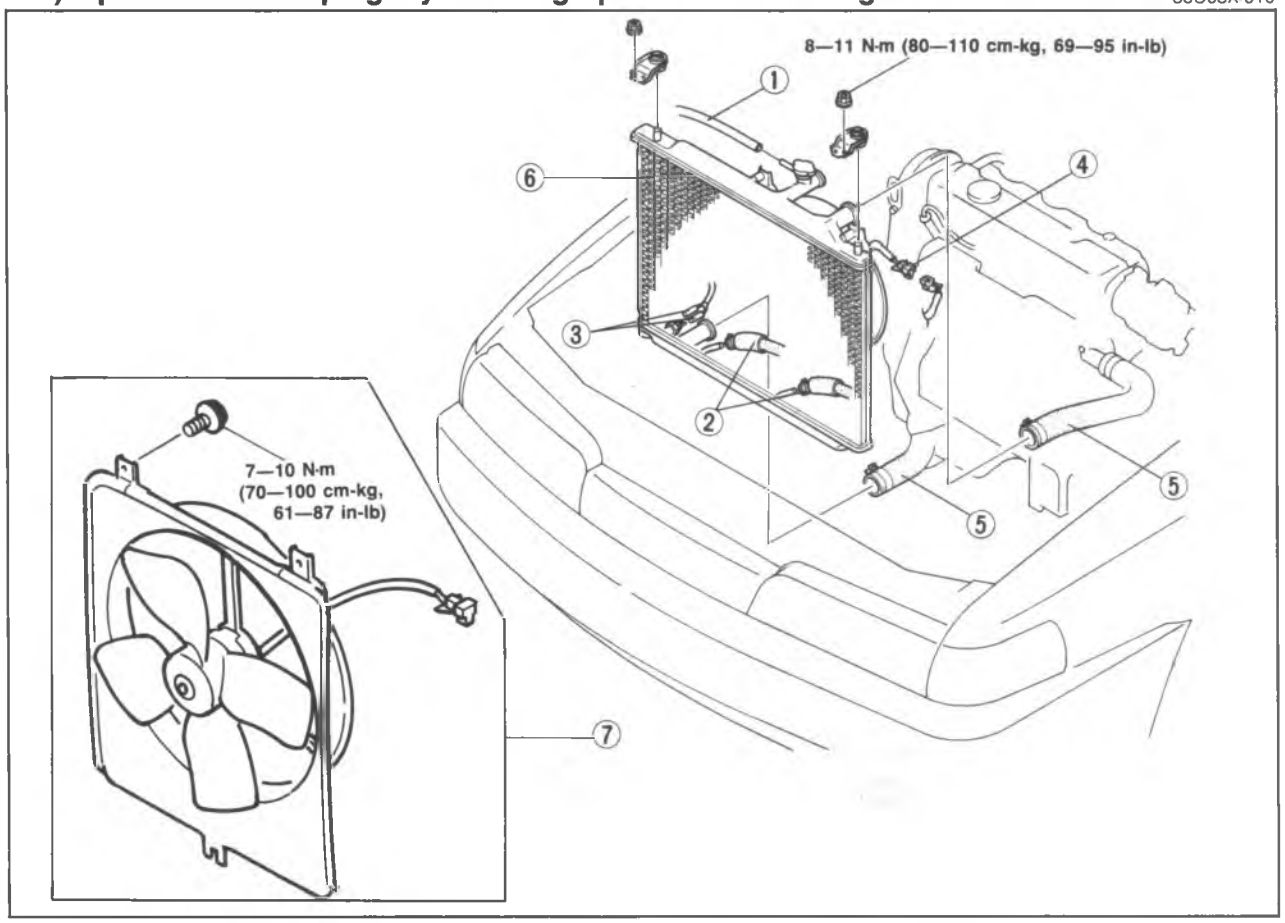

86U03X-011

1. Coolant reservoir hose
2. ATF hose (ATX)
3. Water thermo switch connector
4. Electric fan connector
5. Upper and lower radiator hose
6. Electric fan and radiator assembly
7. Electric fan

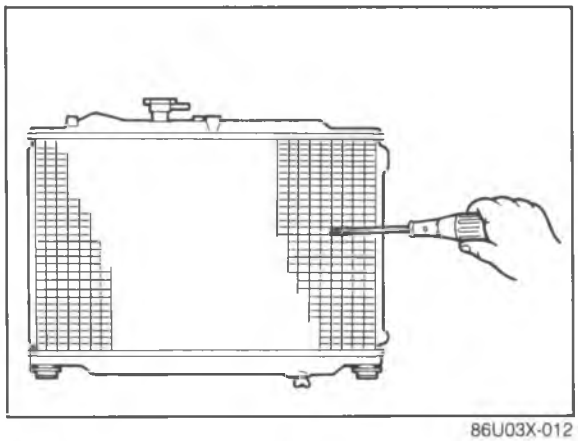

86U03X-012

INSPECTION

Check the following points. Repair or replace if necessary.

1. Cracks, damage, or water leakage
2. Bent fins (Repair with a screwdriver)
3. Distorted or bent radiator inlet.

RADIATOR

REMOVAL / INSTALLATION

1. Drain the engine coolant.
2. Remove in the sequence shown in the figure.
3. Install in the reverse order of removal.

Note

- **Position the hose clamp in the original location on the hose.**
- **Squeeze the clamp lightly with large pliers to ensure a good fit.**

86U03X-010

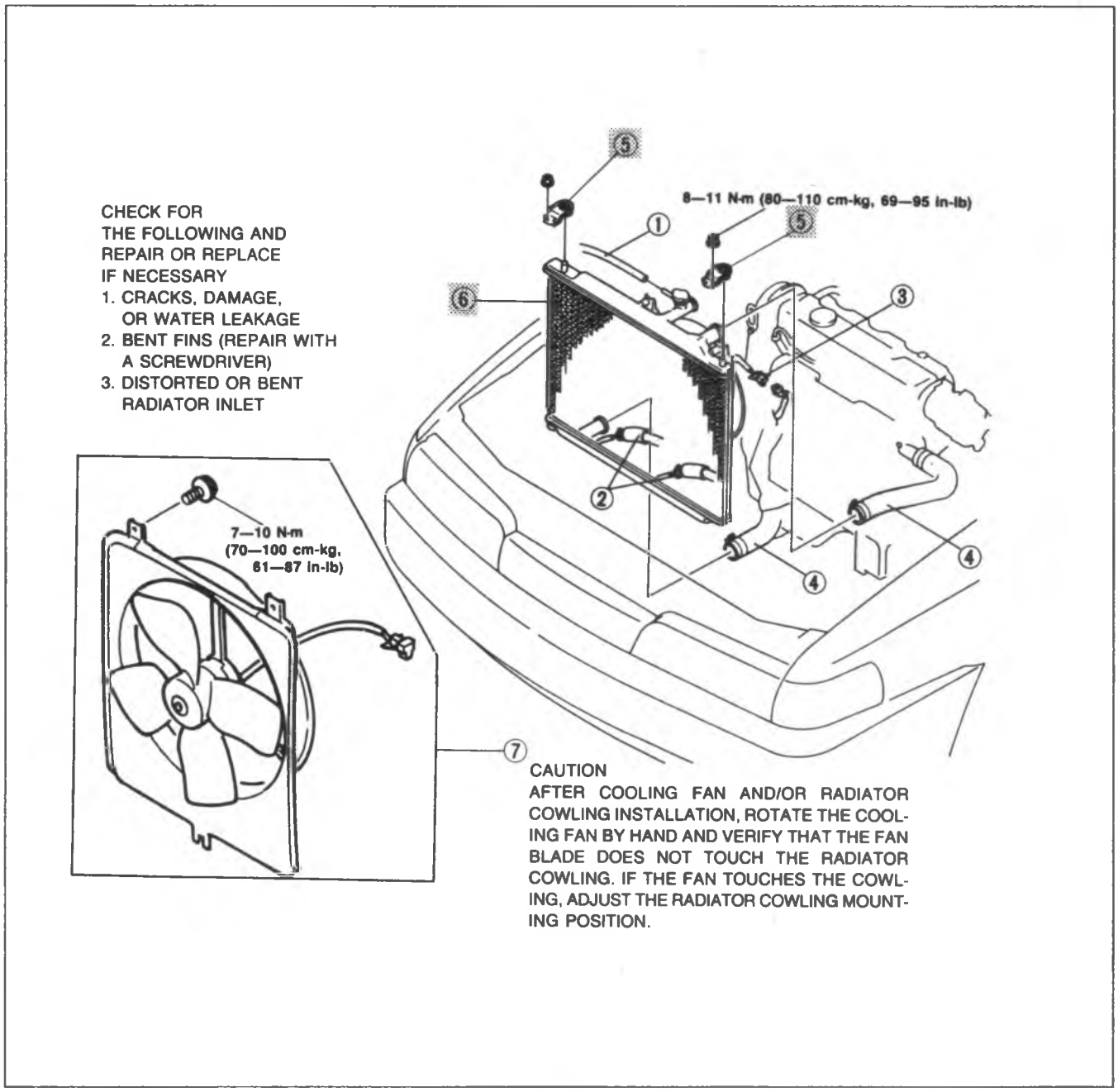

06U0EX-008

1. Coolant reservoir hose
2. ATF hose (ATX)
3. Cooling fan connector
4. Upper and lower radiator hose
5. Radiator bracket
6. Cooling fan and radiator assembly
7. Cooling fan

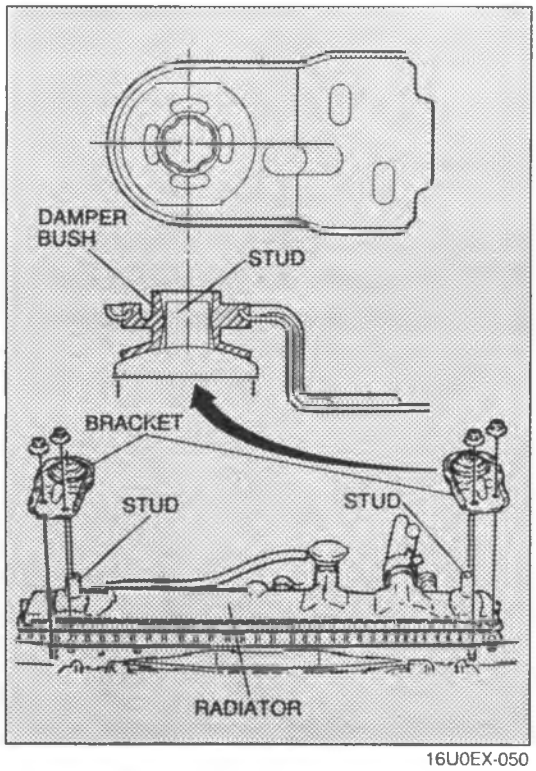

16U0EX-050

Installation Notes
The damper bush on the bracket and the stud on the radiator should be centered as illustrated.
Align the center by moving the radiator and/or brackets.

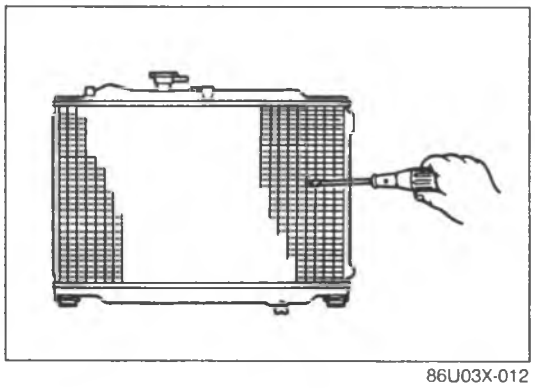

86U03X-012

INSPECTION

Check the following points. Repair or replace if necessary.
1. Cracks, damage, or water leakage
2. Bent fins (Repair with a screwdriver)
3. Distorted or bent radiator inlet.

WATER PUMP

REMOVAL

1. Disconnect the negative battery cable.
2. Turn the crankshaft so that the No.1 cylinder is at TDC of compression.
3. Drain the engine coolant.
4. Remove in the order shown in the figure.

16U0EX-004

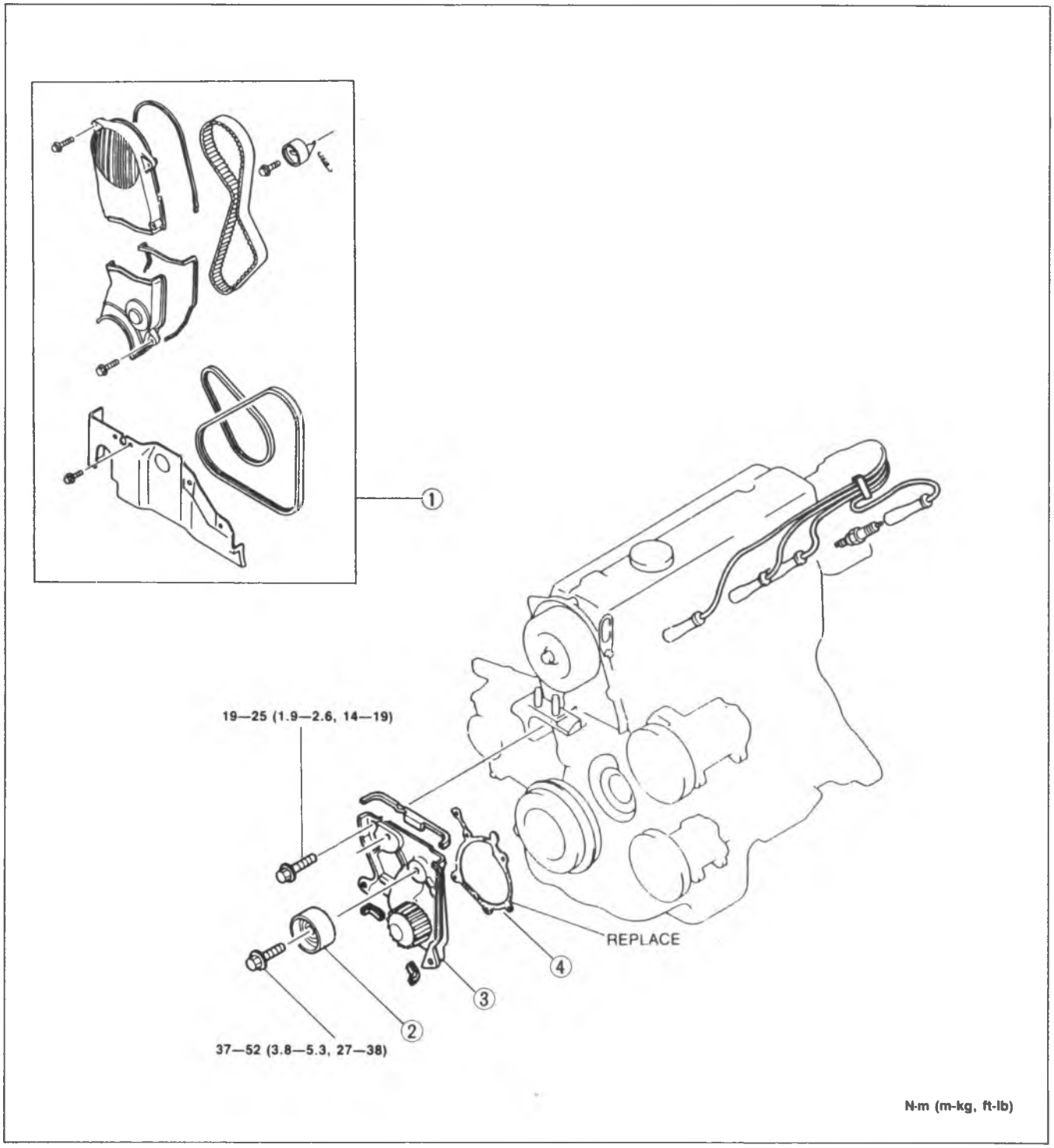

06U0EX-007

1. Timing belt (Refer to Section B)
2. Idler pulley
3. Water pump
4. Gasket

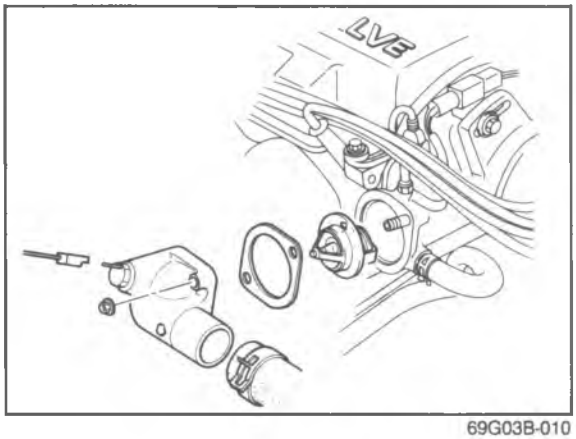

69G03B-010

THERMOSTAT

REMOVAL

1. Drain the engine coolant.
2. Remove the thermostat cover.
3. Remove the thermostat.

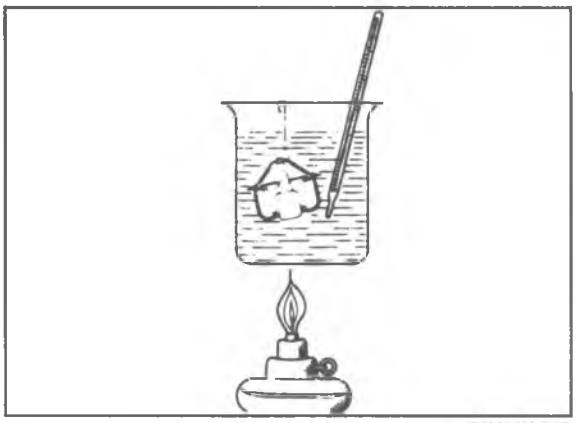

86U03X-017

INSPECTION

Check the thermostat. Replace if necessary.

1. Visually check that the valve is airtight.
2. Place the thermostat and a thermometer in water.
3. Gradually heat the water and check the following:

Initial opening temperature:
86.5—89.5°C (188—193°F)
Full-open temperature: 100°C (212°F)
Full-open lift: 8.5 mm (0.34 in) min.

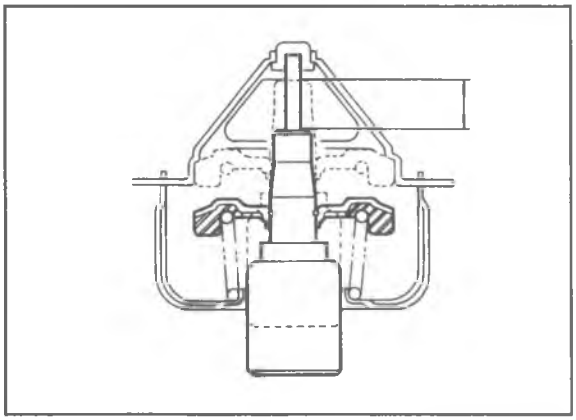

69G03B-012

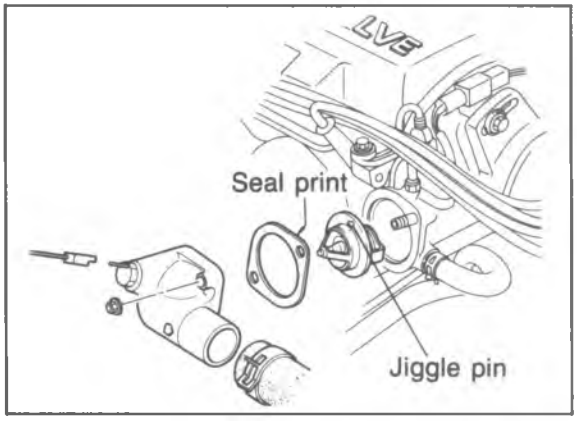

86U03X-018

INSTALLATION

1. Install the thermostat into the cylinder head with jiggle pin at the top.
2. Install a new gasket with the seal print side facing the cylinder head.
3. Install the thermostat cover.

Tightening torque:
19—30 N·m (1.9—3.1 m-kg, 14—22 ft-lb)

4. Replenish the coolant.
5. Start the engine and check for leaks.

ELECTRIC FAN

SYSTEM CIRCUIT

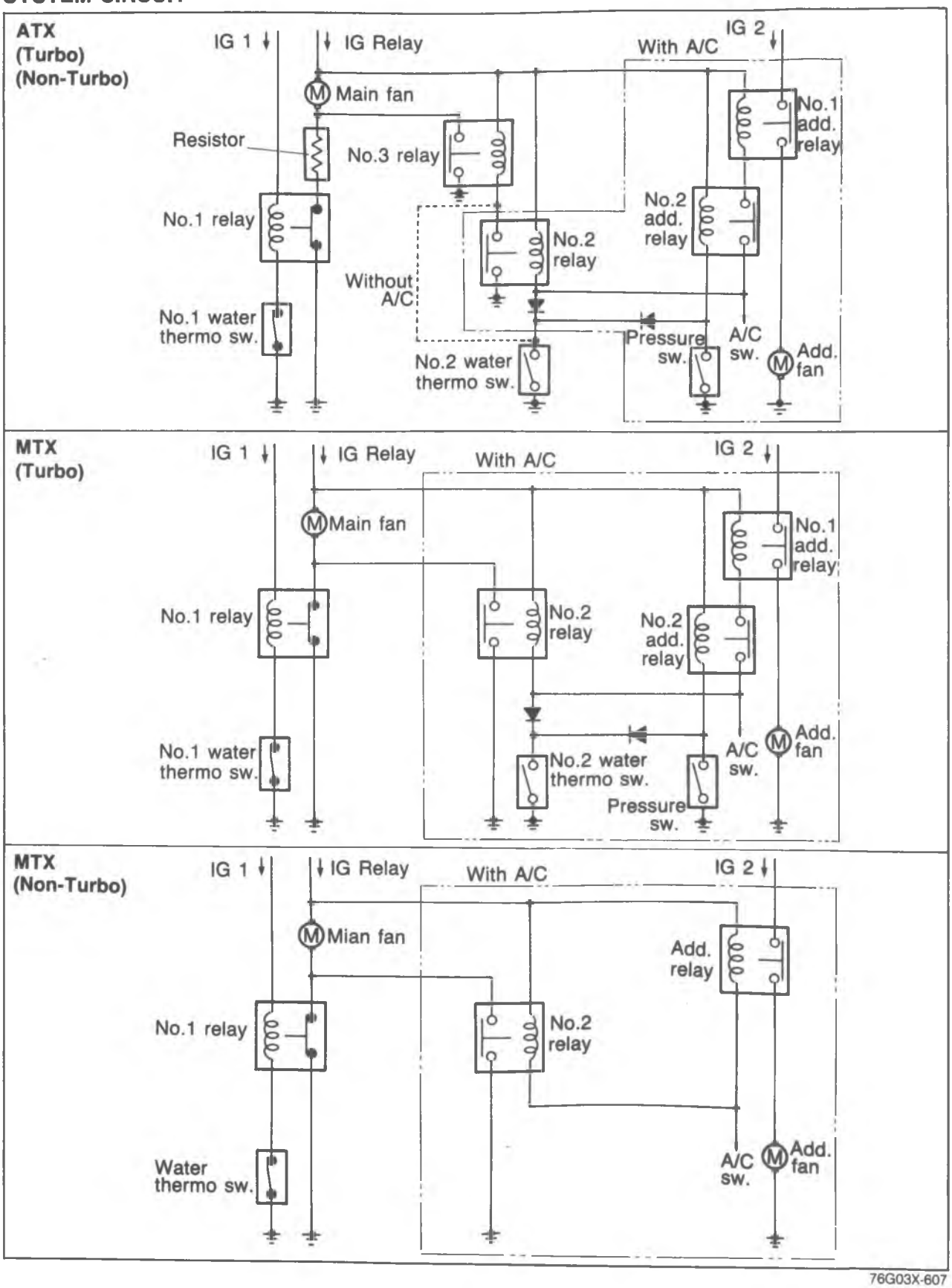

76G03X-607

CIRCUIT INSPECTION

Check the cooling fan operation.

Condition	Operating fan				
	With A/C			Without A/C	
	ATX	MTX		ATX	MTX
		Turbo	Non-Turbo		
Coolant temp. over 97°C (177°F)	Main (Lo)	Main	Main	Main (Lo)	Main
Coolant temp. over 108°C (226°F)	Main (Hi), Additional	Main, Additional	—	Main (Hi)	—
A/C switch ON	Main (Hi)	Main	Main, Condenser fan	—	
Pressure switch ON	Main (Hi), Additional	Main, Additional	—		

86U03X-020

FAN MOTOR

Removal and Installation

1. Remove in the sequence shown in the figure.
2. Install in the reverse order of removal.

86U03X-021

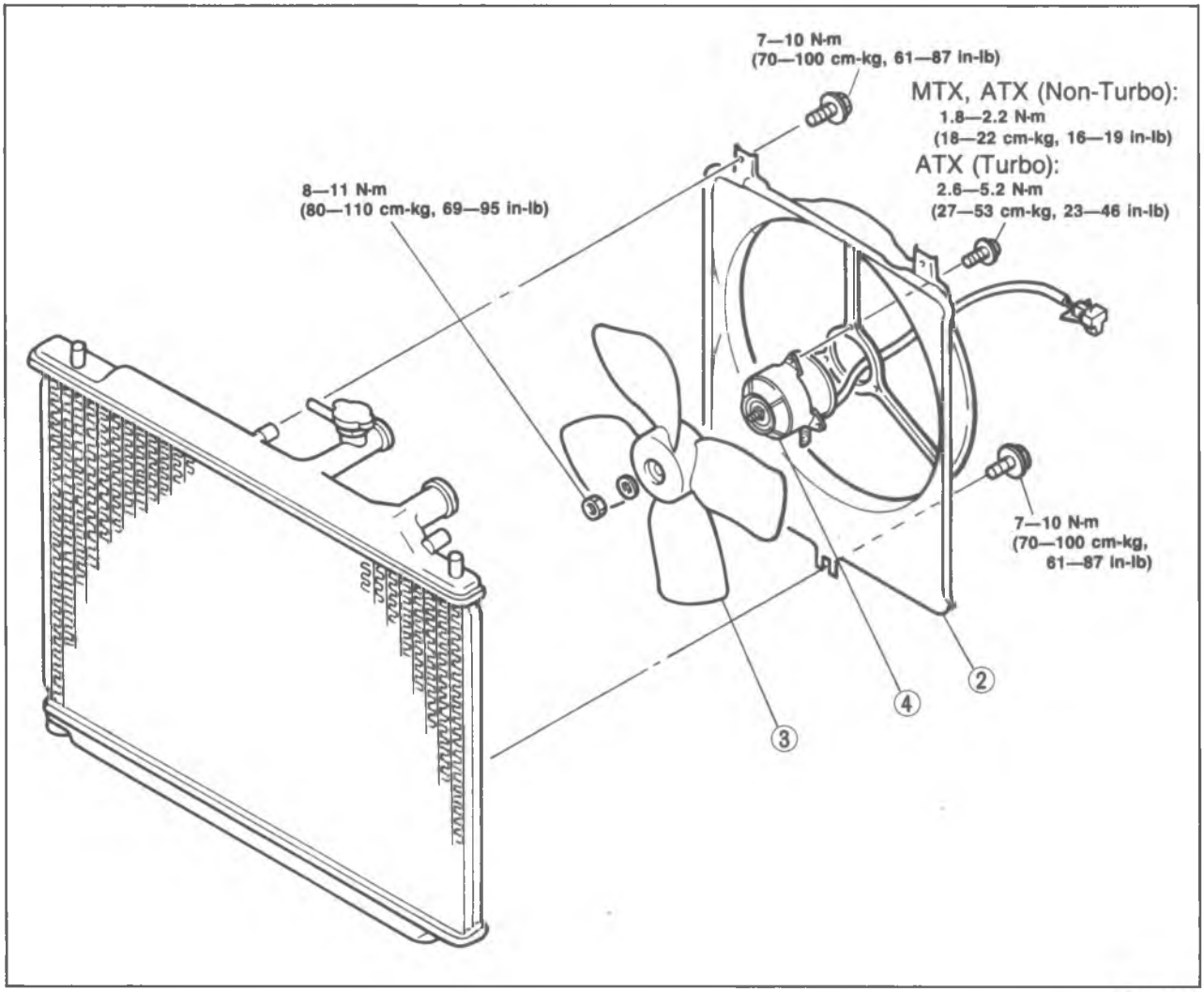

76G03X-608

1. Cooling fan assembly (Refer to page 3—6)
2. Cowling
3. Fan
4. Fan motor

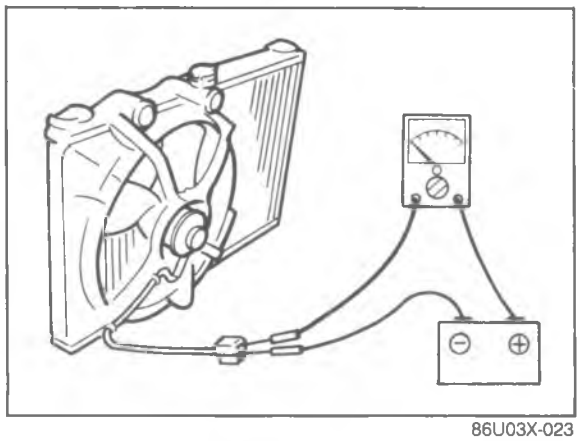

86U03X-023

Inspection

1. Connect an ammeter and battery to the fan motor connectors.
2. Check that the fan motor operates smoothly at the specified current or less.

Current (A)

Turbo	MTX	5.6—7.6
	ATX	10.6—16.6
Non-Turbo	MTX	5.6—7.6
	ATX	8.0—11.0

3. Replace the fan motor if necessary.

WATER THERMO SWITCH

1. Remove the electric fan water thermo switch.

Note
Make sure that the ignition switch is OFF. If not, the fan will operate when the connector is removed.

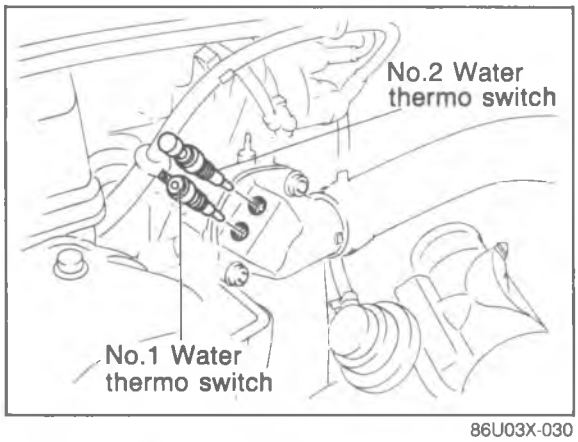

86U03X-030

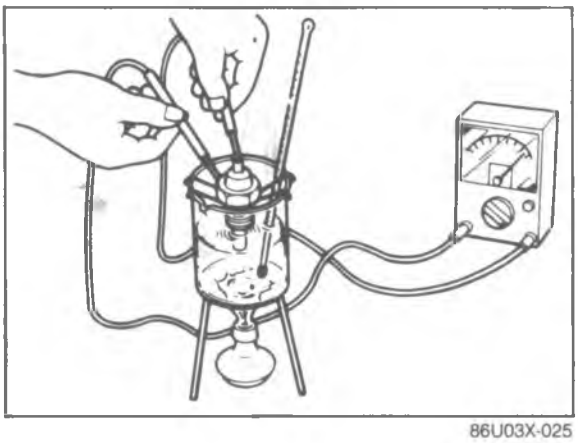

86U03X-025

2. Place the water thermo switch in water.
3. Heat the water gradually, and check for continuity of the switch with an ohmmeter. Replace if necessary.

No.1 water thermo switch:
over 97°C (177°F) ON → OFF
No.2 water thermo switch:
over 108°C (226°F) OFF → ON

4. Install the water thermo switch and a new O-ring.

Caution
Do not use sealing tape.

FUEL AND EMISSION CONTROL SYSTEM (NON-TURBO)

OUTLINE ..... 4A— 2
SYSTEM DIAGRAM ..... 4A— 2
COMPONENT LOCATION ..... 4A— 3
VACUUM HOSE ROUTING DIAGRAM ..... 4A— 6
SPECIFICATIONS ..... 4A— 7
TROUBLESHOOTING GUIDE ..... 4A— 8
TROUBLESHOOTING PROCEDURE ..... 4A— 8
TROUBLESHOOTING WITH SST .. 4A— 10
INSPECTION PROCEDURE ..... 4A— 11
AFTER-REPAIR PROCEDURE ..... 4A— 11
PRINCIPLE OF CODE CYCLE ..... 4A— 13
CODE NUMER ..... 4A— 14
SWITCH MONITOR FUNCTION ..... 4A— 25
INSPCETION PROCEDURE ..... 4A— 26
IDLE ADJUSTMENT ..... 4A— 29
IDLE SPEED ..... 4A— 29
IDLE MIXTURE ..... 4A— 30
INTAKE AIR SYSTEM ..... 4A— 31
COMPONENT DESCRIPTIONS ..... 4A— 31
REMOVAL ..... 4A— 32
PARTS INSPECTION ..... 4A— 33
REPLACEMENT ..... 4A— 35
INSTALLATION ..... 4A— 36
IDLE SPEED CONTROL (ISC) SYSTEM ..... 4A— 38
COMPONENT DESCRIPTIONS ..... 4A— 39
TROUBLESHOOTING ..... 4A— 40
FUEL SYSTEM ..... 4A— 43
COMPONENT DESCRIPTIONS ..... 4A— 44
TROUBLESHOOTING ..... 4A— 45
FUEL PRESSURE RELEASE AND SERVICING FUEL SYSTEM ..... 4A— 46
MULTI-PRESSURE TESTER ..... 4A— 47
FUEL PRESSURE ..... 4A— 49
FUEL PUMP ..... 4A— 50
PULSATION DAMPER ..... 4A— 51
INJECTOR ..... 4A— 52
PRESSURE REGULATOR CONTROL SYSTEM ..... 4A— 54
COMPONENT DESCRIPTIONS ..... 4A— 55
TROUBLESHOOTING ..... 4A— 56
REPLACEMENT ..... 4A— 58
FUEL TANK ..... 4A— 63
DECELERATION CONTROL SYSTEM ..... 4A— 66
COMPONENT DESCRIPTIONS ..... 4A— 67
TROUBLESHOOTING ..... 4A— 68
EXHAUST GAS RECIRCULATION (EGR) SYSTEM ..... 4A— 70
COMPONENT DESCRIPTIONS ..... 4A— 70
TROUBLESHOOTING ..... 4A— 71
EVAPORATIVE EMISSION CONTROL (EEC) SYSTEM ..... 4A— 73
COMPONENT DESCRIPTIONS ..... 4A— 73
TROUBLESHOOTING ..... 4A— 74
POSITIVE CRANKCASE VENTILATION (PCV) SYSTEM ..... 4A— 79
COMPONENT DESCRIPTION ..... 4A— 79
EXHAUST SYSTEM ..... 4A— 80
REMOVAL AND INSTALLATION .. 4A— 81
INSPECTION ..... 4A— 81
SHIFT INDICATOR LIGHT CONTROL SYSTEM ..... 4A— 82
COMPONENT DESCRIPTIONS ..... 4A— 82
TROUBLESHOOTING ..... 4A— 83
CONTROL SYSTEM ..... 4A— 84
RELATIONSHIP CHART ..... 4A— 85
EGI MAIN FUSE ..... 4A— 87
MAIN RELAY ..... 4A— 87
CIRCUIT OPENING RELAY ..... 4A— 87
ENGINE CONTROL UNIT ..... 4A— 88
NEUTRAL SWITCH ..... 4A— 93
CLUTCH SWITCH ..... 4A— 93
BRAKE LIGHT SWITCH ..... 4A— 93
P/S PRESSURE SWITCH ..... 4A— 94
INHIBITOR SWITCH ..... 4A— 94
5TH GEAR SWITCH ..... 4A— 94
E/L CONTROL UNIT ..... 4A— 95
AIR FLOW METER ..... 4A— 96
THROTTLE SENSOR ..... 4A— 97
IDLE SWITCH ..... 4A—101
WATER THERMO SENSOR ..... 4A—101
WATER THERMO SWITCH ..... 4A—101
OXYGEN SENSOR ..... 4A—102
ATMOSPHERIC PRESSURE SENSOR ..... 4A—103

86U04A-001

OUTLINE

SYSTEM DIAGRAM

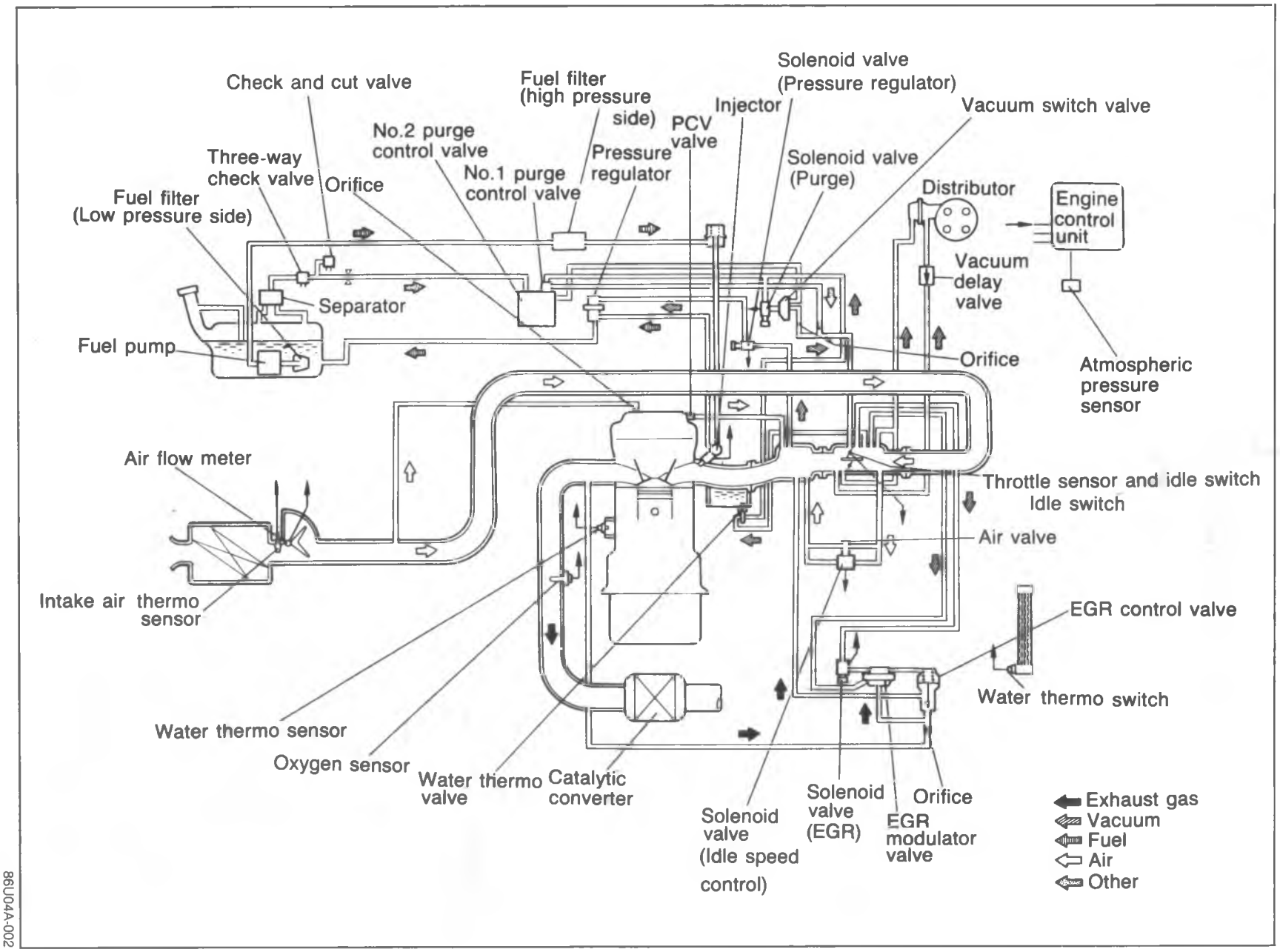

86U04A-002

COMPONENT LOCATION
Input Devices

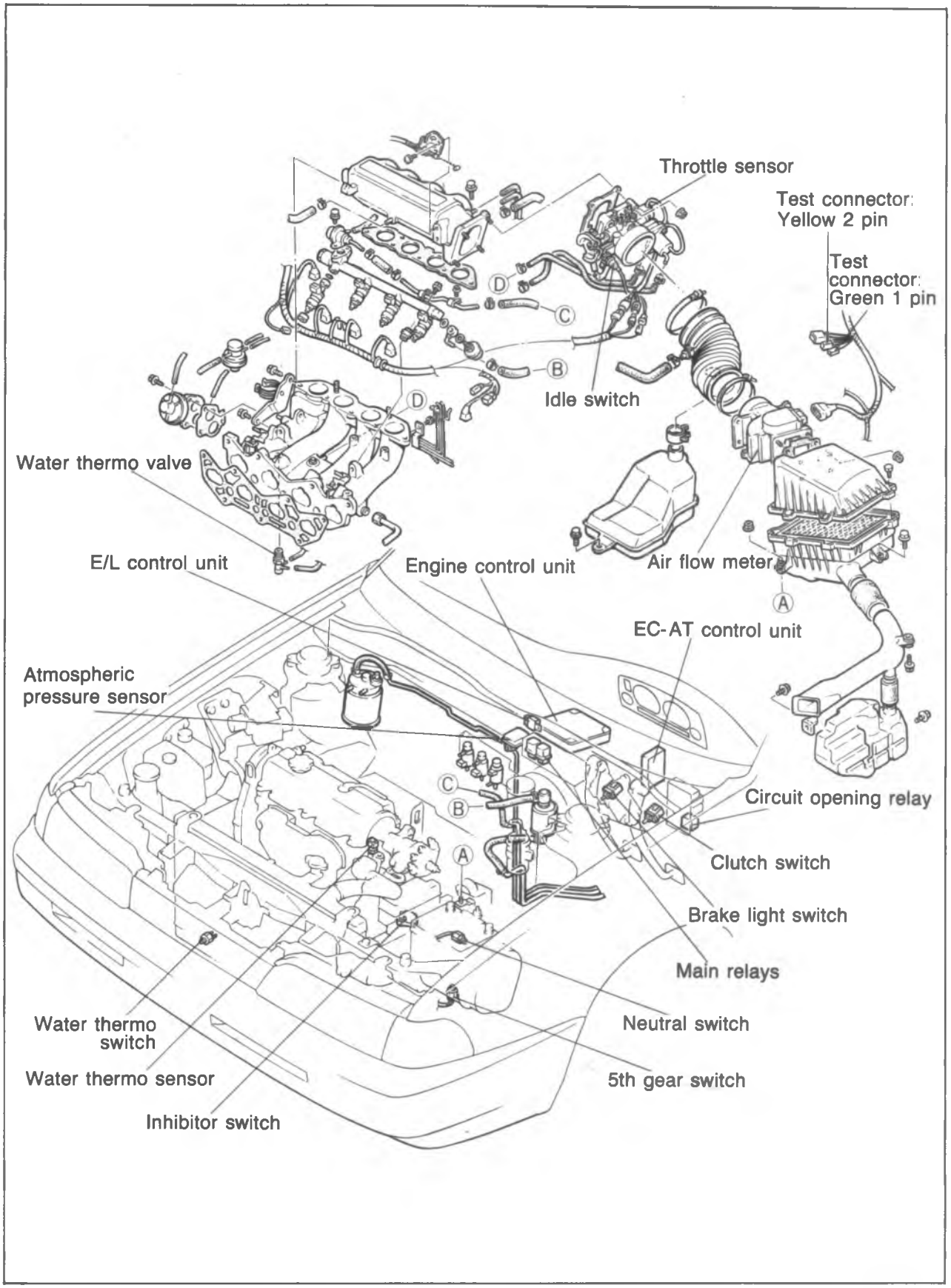

86U04A-003

Fuel and Output Devices

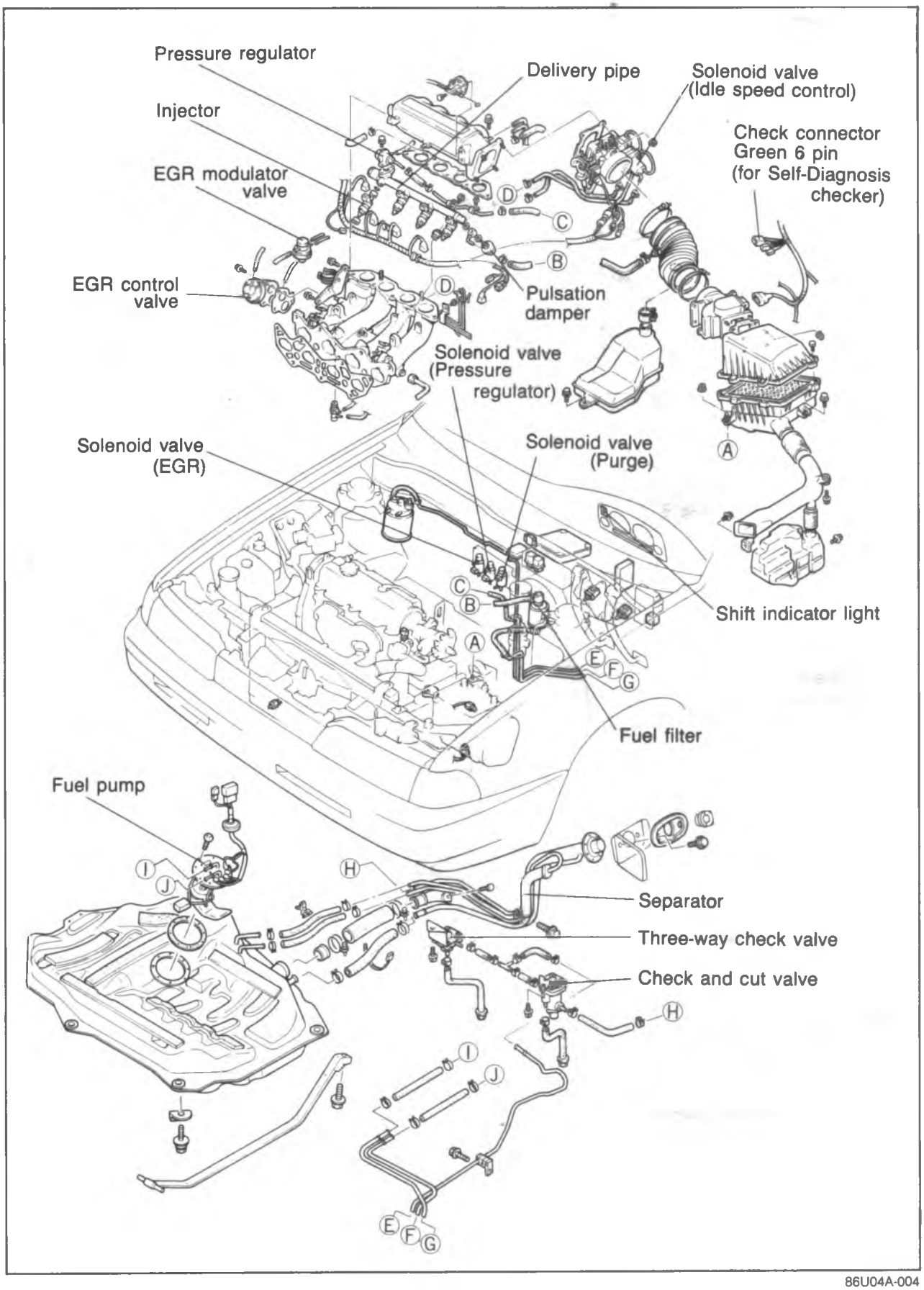

86U04A-004

Exhaust System

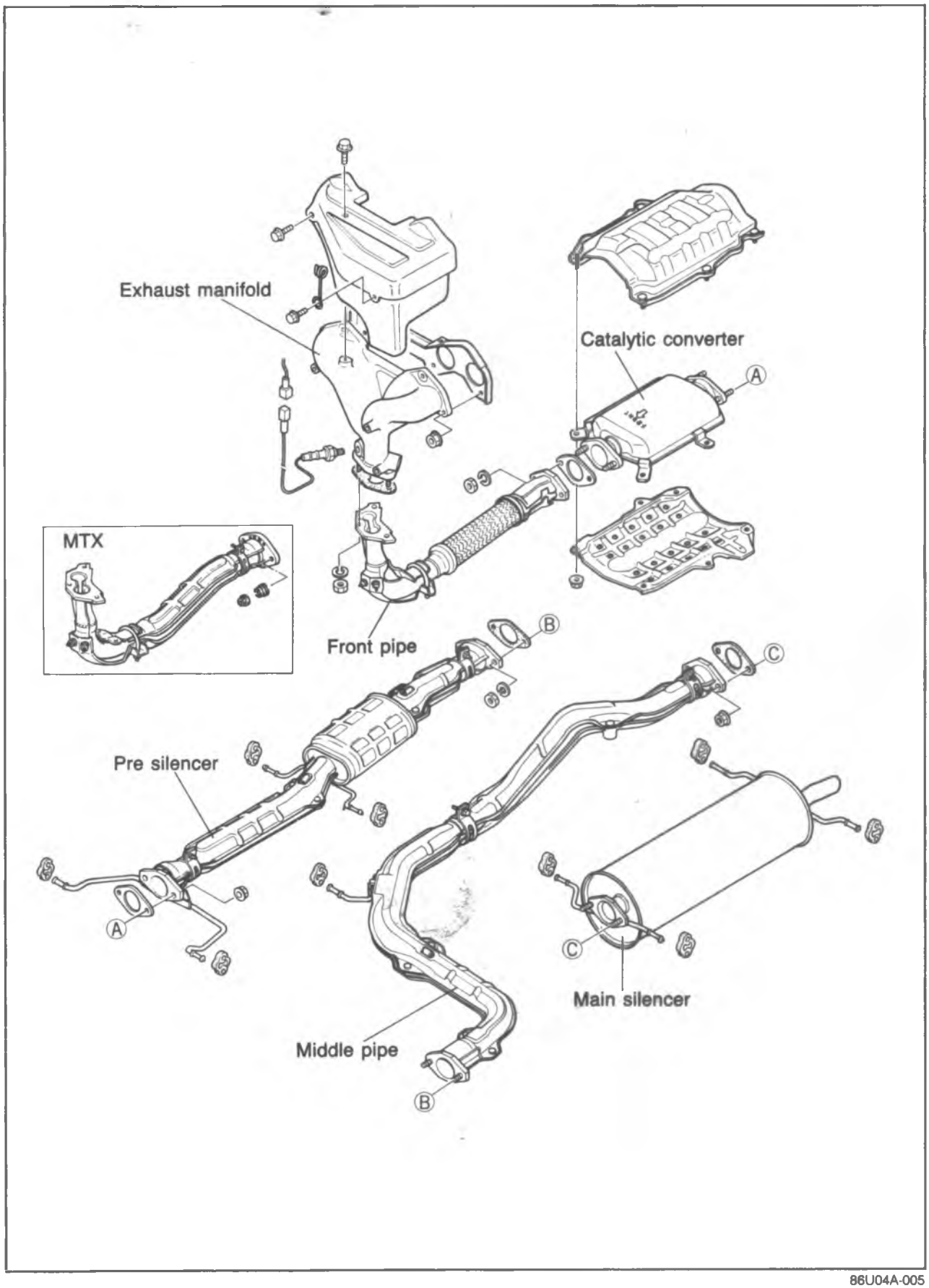

86U04A-005

VACUUM HOSE ROUTING DIAGRAM

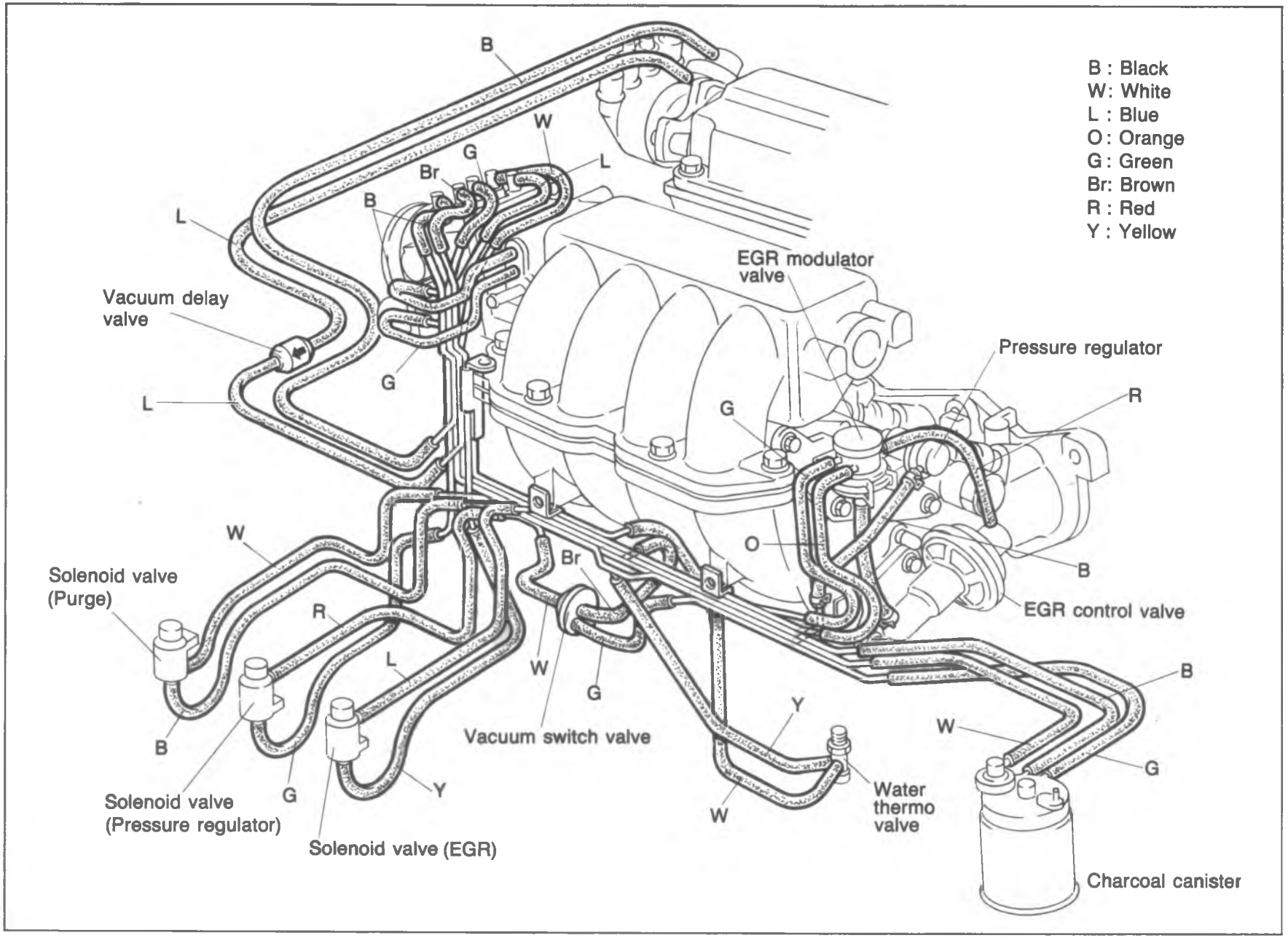

86UD4A-006

SPECIFICATIONS

Item / Engine type			Non-Turbo Engine
Idle speed		rpm	750 ± 25 (ATX: P range)*
Throttle body			
Type			Horizontal draft (2-barrel)
Throat diameter	mm (in)	No. 1	MTX: 40 (1.6), ATX: 46 (1.8)
		No. 2	MTX: 46 (1.8), ATX: 40 (1.6)
Air flow meter			
Resistor	Ω	E_2—V_S	Fully closed: 20—400 Fully open: 20—1,000
		E_2—V_C	100—400
		E_2—V_B	200—400
		E_2—THA	–20°C (–4°F) 13,600—18,400 20°C (68°F) 2,210— 2,690 60°C (140°F) 493— 667
Fuel pump			
Type			Impeller (in tank)
Output pressure		kPa (kg/cm^2, psi)	441—588 (4.5—6.0, 64—85)
Feeding capacity		cc (cu in)/10 sec.	220 (13.4) min
Fuel filter			
Type	Low pressure side		Nylon element
	High pressure side		Paper element
Pressure regulator			
Type			Diaphragm
Regulating pressure		kPa (kg/cm^2, psi)	235—275 (2.4—2.8, 34—40)
Injector			
Type			High-ohmic
Type of drive			Voltage
Resistance		Ω	12—16
Injection amount		cc (cu in) 15 seconds	44—61 (2.68—3.72)
Idle speed control valve			
Solenoid resistance		Ω	6.3—9.9
Fuel tank			
Capacity		liters (US gal, Imp gal)	60 (15.9, 13.2)
Air cleaner			
Element type			Oil permeated
Fuel			
Specification			Unleaded regular

* With test connector grounded

86U04A-007

TROUBLESHOOTING GUIDE

This troubleshooting guide shows the malfunction numbers and the symptoms of various failures. Perform troubleshooting as described below.

Possible cause / Symptom		Input sensors and switches								Output solenoid valves			
		Ignition pulse	Air flow meter	Water thermo sensor	Intake air thermo sensor	Throttle sensor	Atmospheric pressure sensor	Oxygen sensor	Feedback system	Solenoid valve (Pressure regulator)	Solenoid valve (Purge)	Solenoid valve (EGR)	Solenoid valve (Idle speed control)
Page		4A—15	4A—16	4A—17	4A—18	4A—19	4A—20	4A—21	4A—22	4A—23	4A—23	4A—24	4A—24
1 Fault Indicated by SST Code No.		01	08	09	10	12	14	15	17	25	26	28	34
2 Hard start or won't start (Cranks OK)													
3 Engine stalls	While warming up												
	After warming up												
4 Rough idle	While warming up												
	After warming up												
5 High idle speed after warming up													
6 Poor acceleration, hesitation or lack of power													
7 Runs rough on deceleration													
8 Afterburn in exhaust system													
9 Poor fuel consumption													
10 Engine stalls or rough after hot starting													
11 Fails emission test													

TROUBLESHOOTING PROCEDURE

Note
Step 1 under symptom is to quickly determine what system or unit may be at fault by use of the SST. (Self-Diagnosis Checker 49 H018 9A1)

1st: Check input sensors and output solenoid valves with the **SST**. (Refer to page 4A—11.)

2nd: Check other switches with the **SST**. (Refer to page 4A—26.)

3rd: Check the following items:

Electrical system
1) Battery condition
2) Fuses

Fuel system
1) Fuel level
2) Fuel leakage
3) Fuel filter
4) Idle speed (with test connector grounded)

Engine
1) Compression
2) Overheating

Ignition system
1) Ignition spark
2) Ignition timing

Intake air system
1) Air cleaner element
2) Vacuum or air leakage
3) Vacuum hose routing
4) Accelerator cable

Others
1) Clutch slippage
2) Brake dragging

4th: Check Fuel and Emission Control Systems. (Refer to page 4A—9.)

86U04A-008

The Troubleshooting Guide lists the systems most likely to cause a given symptom. After finding systems to check, refer to the pages shown for detailed guides for each system.

Possible cause		Fuel and Emission Control Systems									
		Intake Air System (poor connection of components, throttle body)	Fuel System (Fuel injection, Fuel pressure)	Pressure Regulator Control System	Idle Speed Control (ISC) System (Air valve, Idle speed control solenoid malfunction)	EGR System (EGR control valve stuck and open)	EEC system (Vacuum switch valve, No.1 purge valve malfunction)	PCV System (System clogged)	Deceleration System (Fuel cut operation malfunction)	Shift indicator light control system	Exhaust system (System clogged)
Page		4A—33	4A—45	4A—56	4A—40	4A—71	4A—74	4A—79	4A—68	4A—83	4A—81
Symptom	2	2	1								
	3	4	3		1	2					
		5	4		2	3		1			
	4	5	4		1	3		2			
		6	5		2	3	4	1			
	5	2			1						
	6	3	4			1	2				5
	7		3		2				1		
	8	3	4		1				2		
	9		3			4			1	2	5
	10		2	1							
	11	6	7		4	2	5		3		1

86U04A-009

The numbers of the list shown the priorities of inspections from the most possible to that with the lowest possibility.
These were determined on the following basis:

- Ease of inspection
- Most possible system
- Most possible point in system

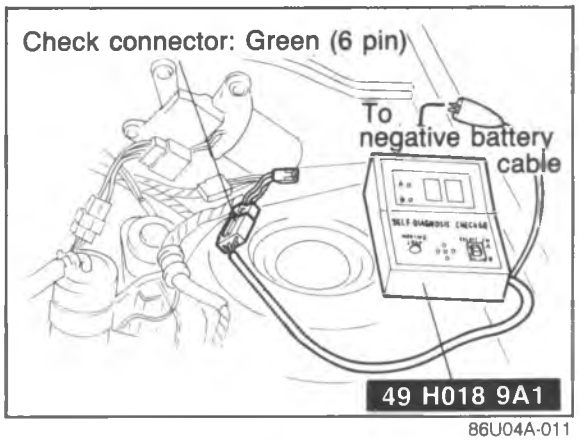

86U04A-011

INSPECTION PROCEDURE

1. Connect the **SST** to the check connector. (Green, 6-pin) and the negative battery terminal.
2. Set the select switch to position A.

Note
The check connector is located at the rear of the left side wheel housing.

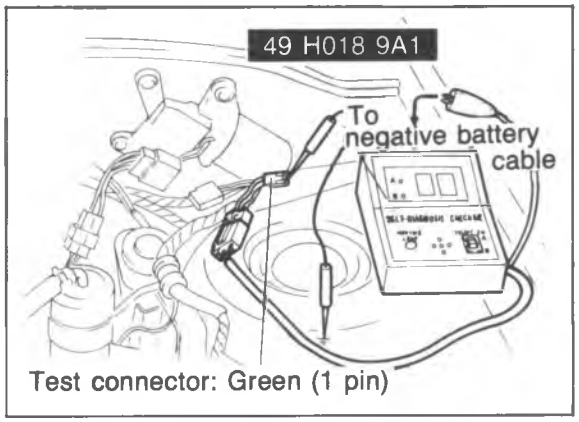

86U04A-012

3. Ground the test connector (Green, 1-pin) with a jumper wire.

Note
The test connector is located near the Self-Diagnosis Checker check connector.

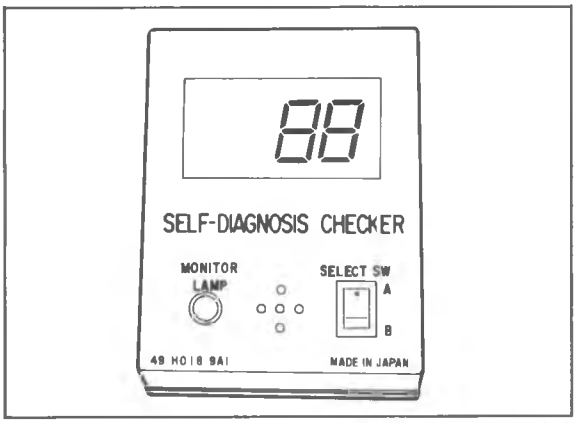

86U04A-013

4. Turn the ignition switch ON.
5. Verify that **88** flashes on the digital display and that the buzzer sounds for **three seconds** after turning the ignition switch ON.
6. If **88** does not flash, check the main relay (Refer to page 4A—87), power supply circuit, and check connector wiring.
7. If **88** flashes and the buzzer sounds continuously for more than **20 seconds**, replace the engine control unit and perform steps 3 and 4 again.
8. Note the code numbers and check for the causes by referring to the check sequences shown on pages **from 4A—15 to 4A—24**. Repair as necessary.

Note
Cancel the code numbers by performing the after-repair procedure after repairing.

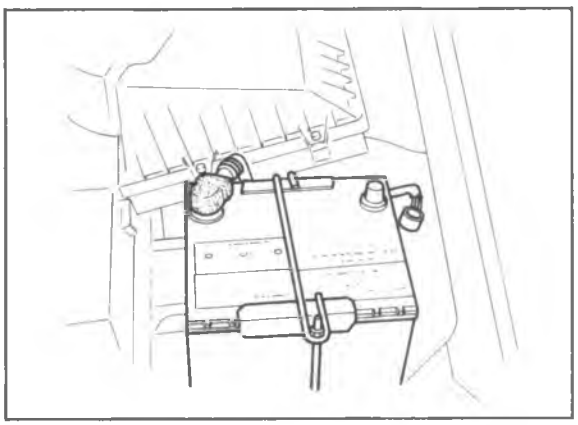
86U04A-014

AFTER-REPAIR PROCEDURE

1. Cancel the memory of malfunctions by disconnecting the negative battery cable and depressing the brake pedal for **at least five seconds**; then reconnect the negative battery cable.

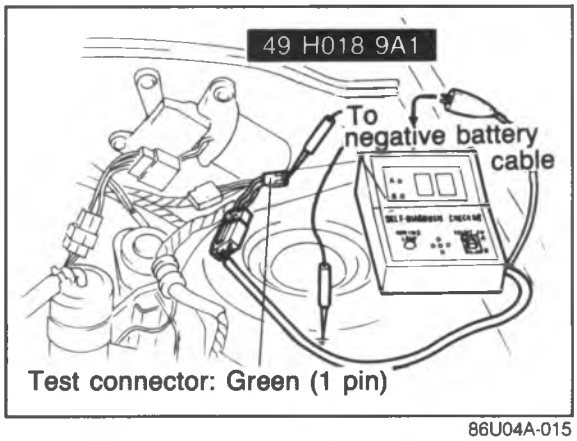

86U04A-015

2. Connect the **SST** to the check connector.
3. Ground the test connector (Green, 1-pin) with a jumper wire.

Ignition switch: ON

for six seconds

86U04A-016

4. Turn the ignition switch ON, but do not start the engine for **six seconds**.
5. Start and warm up the engine, then run it at **2,000 rpm** for **two** minutes.
6. Verify that no code numbers are displayed.

PRINCIPLE OF CODE CYCLE

Malfunction codes are determined as shown below

86U04A-017

1. Code cycle break
The time between warning code cycles is 4.0 sec (the time the light is off).

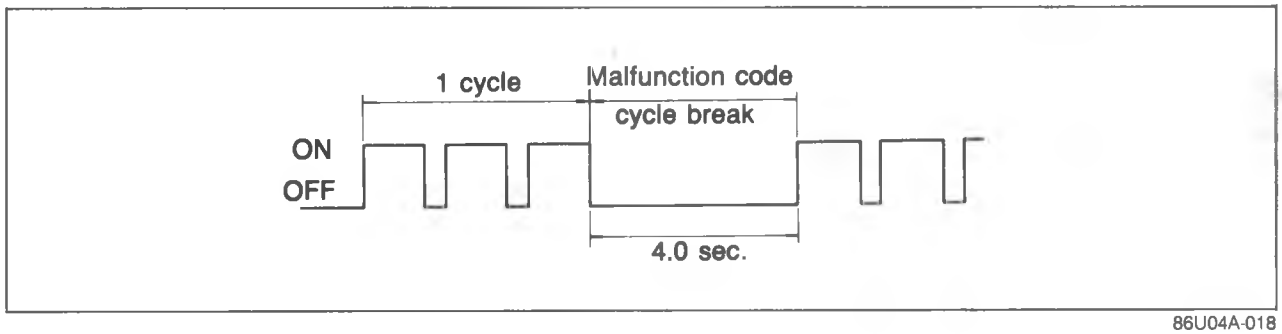

86U04A-018

2. Second digit of malfunction code (ones position)
The digit in the ones position of the warning code represents the number of times the buzzer is on 0.4 sec during one cycle.

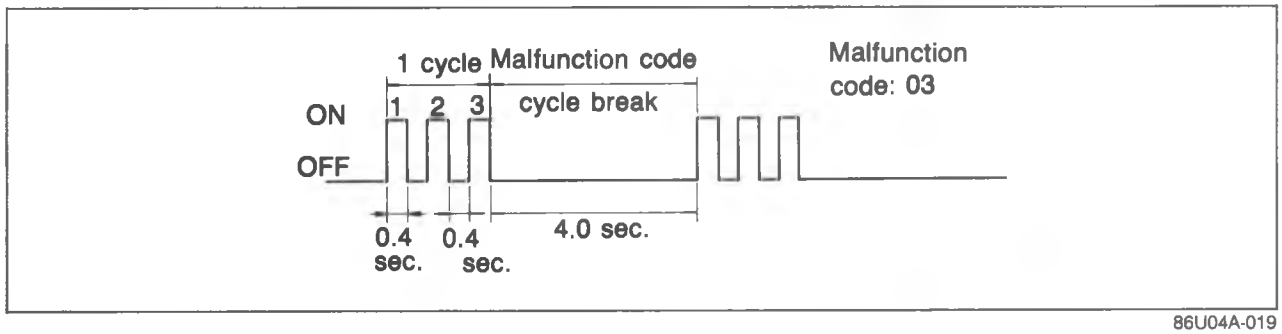

86U04A-019

3. First digit of warning code (tens position)
The digit in the tens position of the warning code represents the number of times the buzzer is on 1.2 sec during one cycle.

It should also be noted that the light goes off for 1.6 sec. between the long and short pulses of the buzzer.

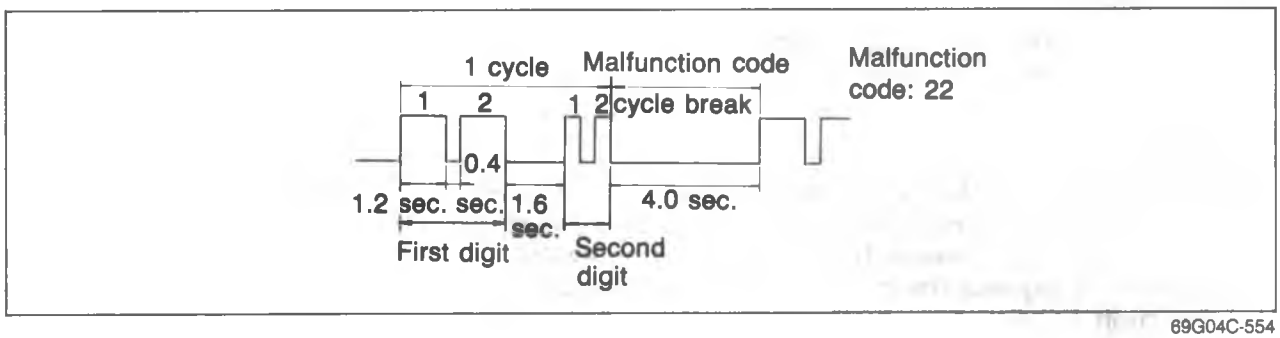

69G04C-554

CODE NUMBER

Malfunction display		Sensor or subsystem	Self-diagnosis	Fail-safe
Code No.	MIL output signal pattern			
01	ON OFF	Ignition pulse	No ignition signal	—
08	ON OFF	Air flow meter	Open or short circuit	Maintains basic signal at preset value
09	ON OFF	Water thermo sensor	Open or short circuit	Maintains constant command • 35°C (95°F) for EGI • 50°C (122°F) for ISC control use
10	ON OFF	Intake air thermo sensor (air flow meter)	Open or short circuit	Maintains constant 20°C (68°F) command
12	ON OFF	Throttle sensor	Open or short circuit	Maintains constant command of throttle valve fully open
14	ON OFF	Atmospheric pressure sensor	Open or short circuit	Maintains constant command of sea level pressure
15	ON OFF	Oxygen sensor	Sensor output continues less than 0.55V 120 sec. after engine starts (1,500 rpm)	Cancels EGI feedback operation
17	ON OFF	Feedback system	Sensor output not changed 20 sec. after engine exceeds 1,500 rpm	Cancels EGI feedback operation
25	ON OFF	Solenoid valve (pressure regulator)	Open or short circuit	—
26	ON OFF	Solenoid valve (purge control)		—
28	ON OFF	Solenoid valve (EGR)		—
34	ON OFF	Solenoid valve (Idle speed control)		—

86U04A-020

Caution

a) If there is more than one failure present, the lowest number malfunction code is displayed first, the remaining codes are displayed sequentially.

b) After repairing a failure, turn off the ignition switch and disconnect the negative battery cable and depress the brake pedal for at least 5 seconds to erase the memory of a malfunction code.

If a malfunction code number is shown on the **SST**, check the following chart along with the wiring diagram.

Code No. 01 (Ignition pulse) **PC: Possible Cause**

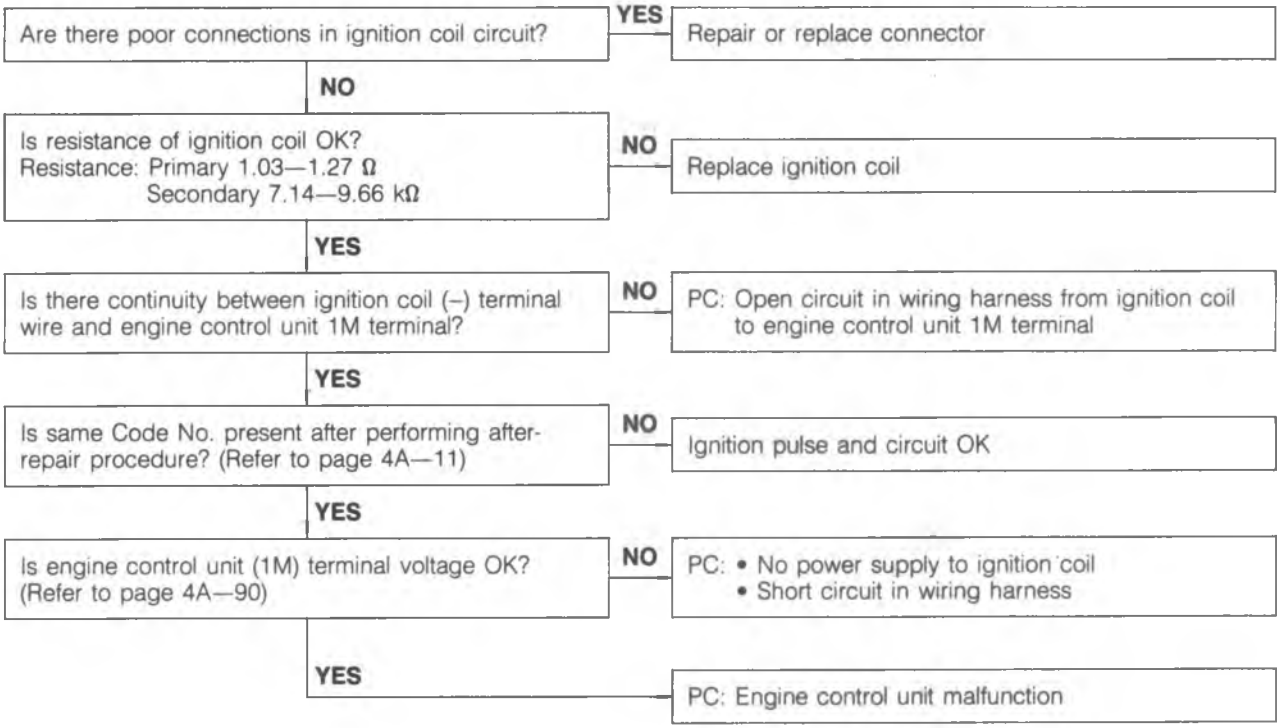

86U04A-021

Code No. 08 (Air flow meter)

PC: Possible Cause

Are there poor connections in air flow meter circuit?

- **YES** → Repair or replace connector
- **NO** ↓

Is there continuity between air flow meter and engine control unit?

Air flow meter	Control unit
V_B (RB wire)	3I
V_C (RW wire)	2B
V_S (RB wire)	2E
E_2 (LgY wire)	2C

- **NO** → PC: Open circuit in wiring harness from air flow meter to engine control unit
- **YES** ↓

Is resistance of air flow meter OK?
Resistance:

Terminal	Fully closed (Ω)	Fully open (Ω)
$E_2 \leftrightarrow V_S$	20—400	20—1,000
$E_2 \leftrightarrow V_C$	100—400	
$E_2 \leftrightarrow V_B$	200—400	

- **NO** → Repair air flow meter
- **YES** ↓

Is same Code. No. present after performing after-repair procedure? (Refer to page 4A—11)

- **NO** → Air flow meter and circuit OK
- **YES** ↓

Are engine control unit terminal voltages OK?
Check terminal: 2B, 2C, 2E, 3I
(Refer to page 4A—91 and 4A—92)

- **NO** → PC: Short circuit in wiring harness
- **YES** → PC: Engine control unit malfunction

86U04A-022

Code No. 09 (Water thermo sensor)

PC: Possible Cause

Are there poor connections at water thermo sensor circuit?

- **YES** → Repair or replace connector
- **NO** ↓

Is there continuity between water thermo sensor and control unit?

Water thermo sensor	Control unit
A (YB wire)	2I
B (LgY wire)	2C

- **NO** → PC: Open circuit in wiring harness from water thermo sensor to engine control unit
- **YES** ↓

Is resistance of the water thermo sensor OK?
Resistance:

Coolant temp	Resistance
–20°C (–4°F)	14.5—17.8 kΩ
20°C (68°F)	2.2— 2.7 kΩ
40°C (104°F)	1.0— 1.3 kΩ
60°C (140°F)	500—640 Ω
80°C (176°F)	280—350 Ω

- **NO** → Replace water thermo sensor
- **YES** ↓

Is same Code No. present after performing after-repair procedure? (Refer to page 4A—11)

- **NO** → Water thermo sensor and circuit OK
- **YES** ↓

Are engine control unit 2I and 2C terminal voltages OK? (Refer to page 4A—91)

- **NO** → PC: Engine short circuit in wiring harness
- **YES** → PC: Engine control unit malfunction

86U04A-023

Code No. 10 (Intake air thermo sensor)

PC: Possible Cause

Are there poor connections in air flow meter circuit?

- **YES** → Repair or replace connector
- **NO** ↓

Is there continuity between intake air thermo sensor (in air flow meter) and engine control unit?

Intake air temperature sensor (in air flow meter)	Control unit
THA (R wire)	2J
E_2 (LgY wire)	2C

- **NO** → PC: Open circuit in wiring harness from intake air thermo sensor (in air flow meter) to engine control unit
- **YES** ↓

Is resistance of intake air thermo sensor (in air flow meter) OK?
Resistance:

Terminal	Resistance
E_2 ↔ THA	−20°C (−4°F) : 13.6—18.4 kΩ 20°C (68°F) : 2.21— 2.69 kΩ 60°C (140°F) : 493— 667 Ω

- **NO** → Replace air flow meter
- **YES** ↓

Is same Code No. present after performing after-repair procedure? (Refer to page 4A—11)

- **NO** → Intake air thermo sensor and circuit OK
- **YES** ↓

Are engine control unit 2J and 2C terminal voltages OK? (Refer to page 4A—91)

- **NO** → PC: Short circuit in wiring harness
- **YES** → PC: Engine control unit malfunction

86U04A-024

Code No. 12 (Throttle sensor) **PC: Possible cause**

Are there poor connections in throttle sensor circuit?
- YES → Repair or replace connector terminal
- NO ↓

Is there 4.5—5.5 V at A terminal of throttle sensor connector?
(Refer to page 4A—97)
- NO → PC: •Open or short circuit in wiring harness from A terminal to 2A terminal of control unit •Control unit malfunction
- YES ↓

Is C terminal of throttle sensor connector grounded?
(Refer to page 4A—97.)
- NO → PC: Open circuit in wiring harness from C terminal to ground
- YES ↓

Is throttle sensor adjusted correctly?
(Refer to page 4A—98)
- NO → Adjust throttle sensor. (Refer to page 4A—98)
- YES ↓

Is same Code No. present after performing after-repair procedure?
(Refer to page 4A—11)
- NO → Throttle sensor and circuit OK
- YES ↓

Is engine control unit 2G terminal voltage OK:
(Refer to page 4A—91)
- NO → PC: Open or short circuit in wiring harness from B terminal of throttle sensor to 2G terminal of engine control unit
- YES → PC: Engine control unit malfunction

86U04A-025

Code No. 14 (Atmospheric pressure sensor)

PC: Possible cause

Are there poor connections in atmospheric pressure sensor circuit?
- YES → Repair or replace connector
- NO ↓

Is there Vref at (LgR) wire of atmospheric pressure sensor connector?
Vref: 4.5—5.5V
- NO → PC: Open or short circuit in wiring harness from (LgR) wire to engine control unit
  - Engine control unit malfunction (If 2A terminal voltage not 4.5—5.5V)
- YES ↓

Is voltage at (Y) wire of atmospheric pressure sensor connector OK?
Voltage: 3.5—4.5V.....at sea level
2.5—3.5V.....at high altitude
(2,000 m (6,500 ft))
- NO (0V) → PC: Short circuit in wiring harness from atmospheric pressure sensor (Y) wire to engine control unit 2H terminal
- NO (Other) → Replace atmospheric pressure sensor
- YES ↓

Is there continuity between atmospheric pressure sensor to engine control unit?

Atmospheric pressure sensor	Control unit
A (LgY wire)	2C
D (Y wire)	2H

- NO → PC: Open circuit in wiring harness from atmospheric pressure sensor to engine control unit
- YES ↓

Is same Code No. present after performing after-repair procedure? (Refer to page 4A—11)
- NO → Atmospheric pressure sensor and circuit OK
- YES ↓

Are engine control unit 2C and 2H terminal voltages OK? (Refer to page 4A—91)
- NO → PC: Short circuit in wiring harness
- YES → PC: Engine control unit malfunction

86U04A-026

Code No. 15 (Oxygen sensor)

PC: Possible Cause

Note
When the Code No.15 and 17 are present at the same time, first preform the checking procedure for the Code No.17. (Refer to page 4A—22.)

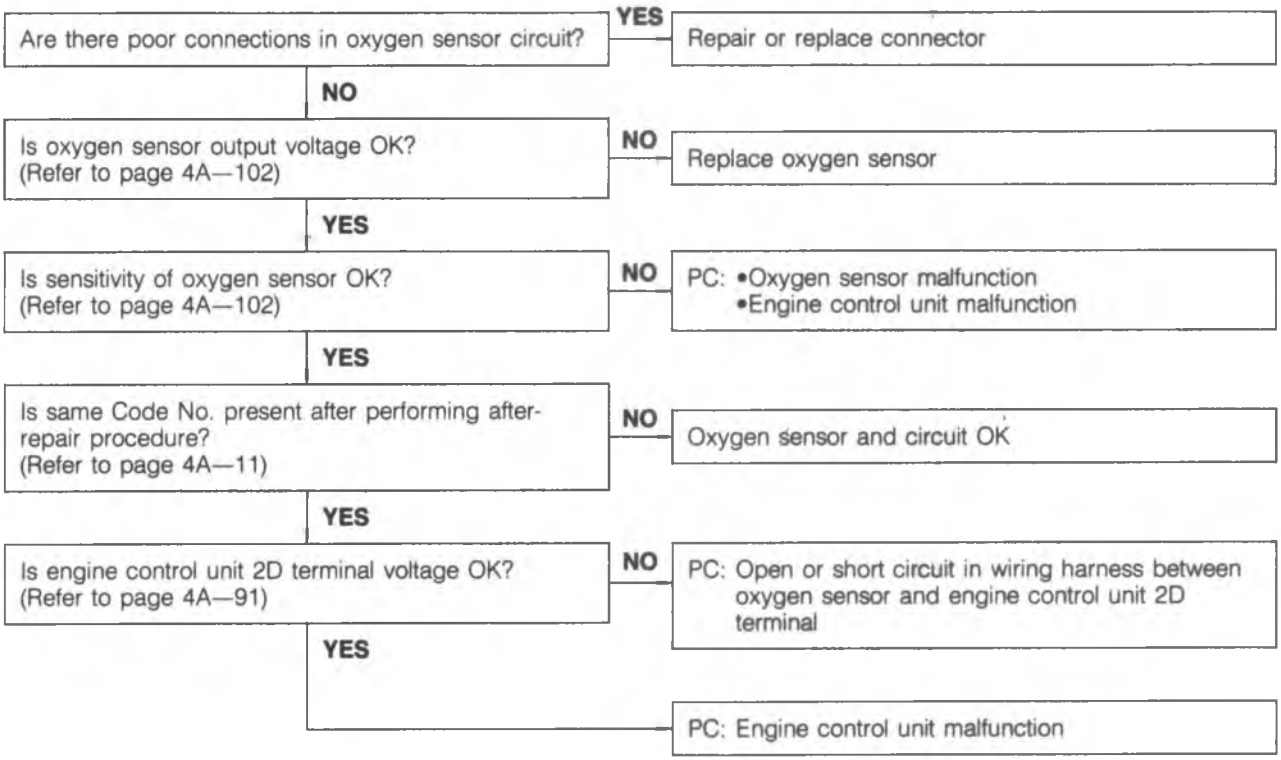

86U04A-027

Code No. 17 (Feedback system) **PC: Possible Cause**

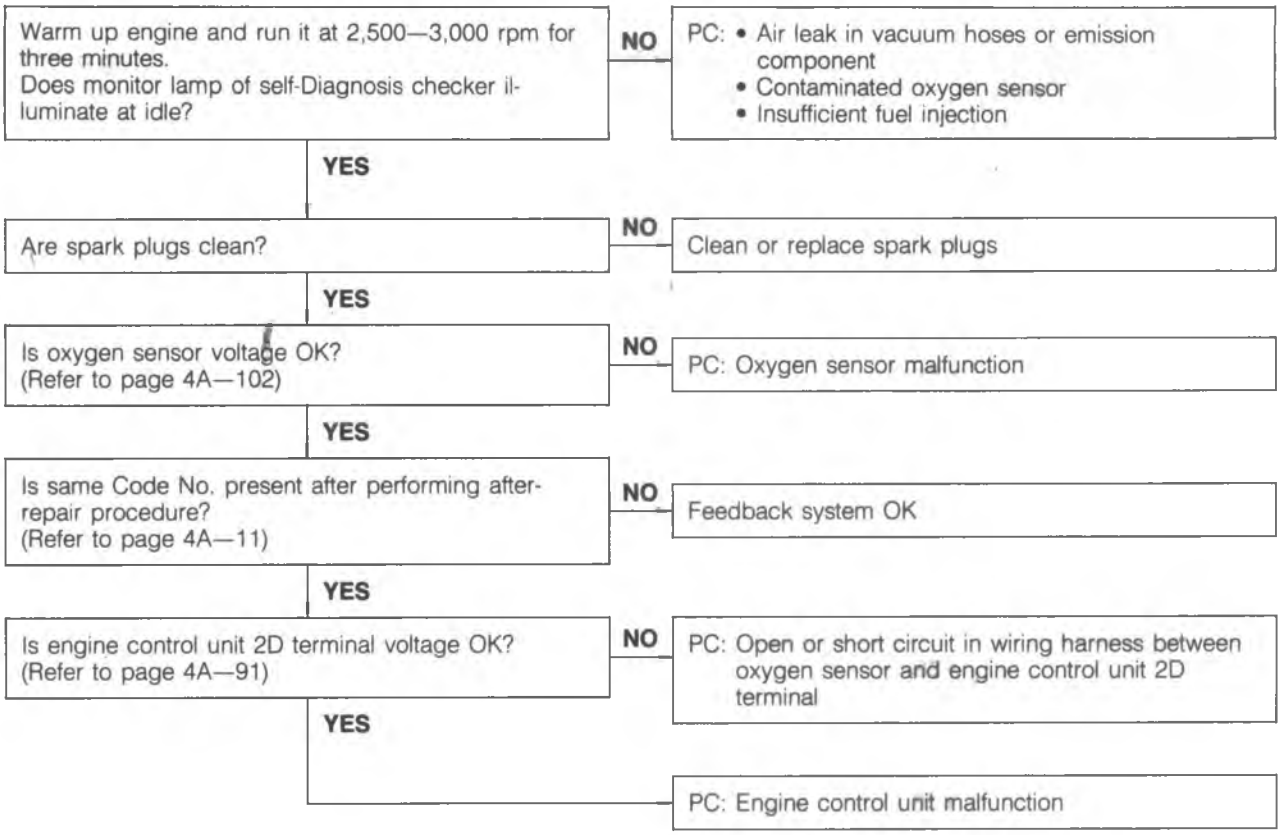

86U04A-028

Code No. 25 (Solenoid valve-Pressure regulator)

PC: Possible Cause

- Are there poor connections in solenoid valve circuit?
  - YES → Repair or replace connector
  - NO ↓
- Is there continuity of solenoid valve?
  - NO → Replace solenoid valve
  - YES ↓
- Is there battery voltage at (RB) wire of solenoid valve connector?
  - NO → PC: Open circuit in wiring harness from (RB) wire to main relay (for engine control unit)
  - YES ↓
- Is there continuity between solenoid valve and engine control unit?

Solenoid valve	Control unit
B (WR wire)	2K

  - NO → PC: Open circuit in wiring harness from solenoid valve to engine control unit
  - YES → PC: • Short circuit in wiring harness • Engine control unit malfunction

86U04A-029

Code No. 26 (Solenoid valve-Purge)

- Are there poor connections in solenoid valve circuit?
  - YES → Repair or replace connector
  - NO ↓
- Is there continuity of solenoid valve?
  - NO → Replace solenoid valve
  - YES ↓
- Is there battery voltage at (RB) wire of solenoid valve circuit?
  - NO → PC: Open circuit in wiring harness from (RB) wire to main relay (for engine control unit)
  - YES ↓
- Is there continuity between solenoid valve and engine control unit?

Solenoid valve	Control unit
B (WB wire)	2P

  - NO → PC: Open circuit in wiring harness from solenoid valve to engine control unit
  - YES → PC: • Short circuit in wiring harness • Engine control unit malfunction

86U04A-030

Code No. 28 (Solenoid valve—EGR)

Are there poor connections in solenoid valve circuit?
- YES → Repair or replace connector
- NO ↓

Is there continuity of solenoid valve?
- NO → Replace solenoid valve
- YES ↓

Is there battery voltage at (RB) wire of solenoid valve connector?
- NO → PC: Open circuit in wiring harness from (RB) wire to main relay (for engine control unit
- YES ↓

Is there continuity between solenoid valve and engine control unit?

Solenoid valve	Control unit
B (WL wire)	2N

- NO → PC: Open circuit in wiring harness from solenoid valve to engine control unit
- YES → PC: • Short circuit in wiring harness • Engine control unit malfunction

86U04A-031

Code No. 34 (Solenoid valve—Idle speed control valve (ISC))

Are there poor connections in ISC valve circuit?
- YES → Repair or replace connector
- NO ↓

Is resistance of ISC valve OK?
Resistance; 6.3—9.9 Ω (Refer to Page 4A—42)
- NO → Replace ISC valve
- YES ↓

Is there battery voltage at (RB) wire of ISC valve connector?
- NO → PC: Open or short circuit in wiring harness from (RB) wire to main relay (for engine control unit)
- YES ↓

Is there continuity between ISC valve and engine control unit?

ISC valve	Control unit
B (W wire)	2Q

- NO → PC: Open circuit in wiring harness from ISC valve to engine control unit
- YES → PC: • Short circuit in wiring harness • Engine control unit malfunction

86U04A-032

SWITCH MONITOR FUNCTION

Individual switches can be monitored by the SST.

Note
The test connector must be grounded and the ignition switch ON (engine stopped).

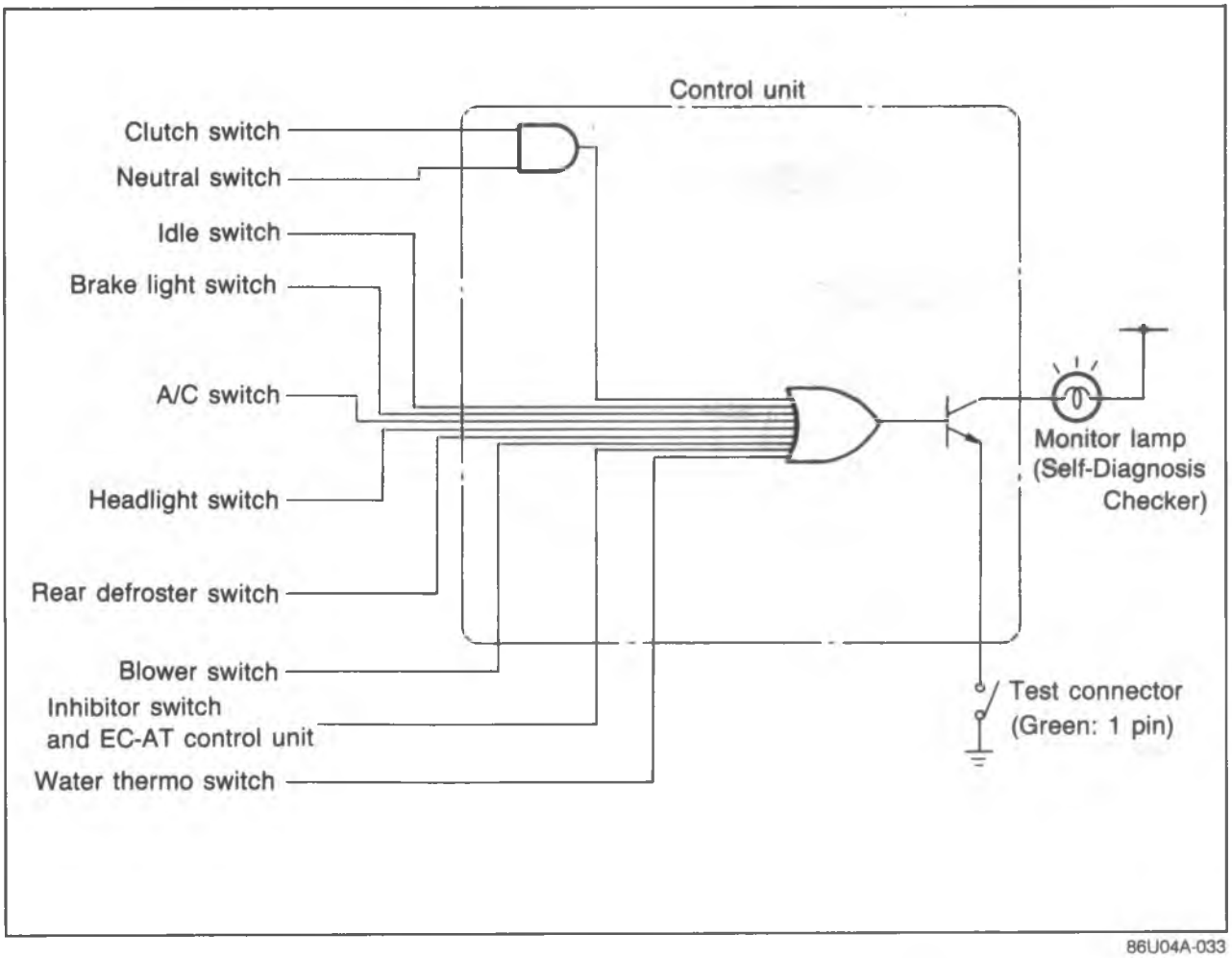

86U04A-033

Switch	Self-Diagnosis Checker (Monitor lamp)		Remarks
	Light ON	Light OFF	
Clutch switch	Pedal released	Pedal depressed	Gear: IN
Neutral switch	In gear	Neutral	Clutch pedal released
Idle switch	Pedal depressed	Pedal released	—
Brake light switch	Pedal depressed	Pedal released	—
A/C switch	ON	OFF	Blower motor position: "1" position
Headlight switch	ON	OFF	—
Rear defroster switch	ON	OFF	—
Blower switch	ON	OFF	Blower motor position: "3" or "4" position
Inhibitor switch and EC-AT control unit	D, 1, 2 and R range	P and N range	—
Water thermo switch (Electrical fan)	Terminal disconnected	Terminal connected	While fan not operating

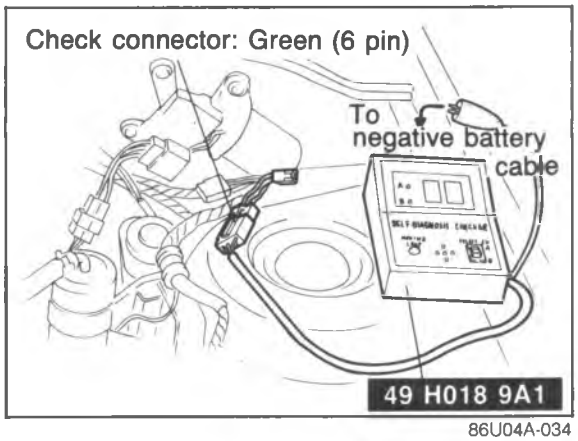

86U04A-034

INSPECTION PROCEDURE

1. Warm up the engine to normal operating temperature and stop it.
2. Connect the **SST** to the check connector (Green, 6-pin) and the negative battery terminal.

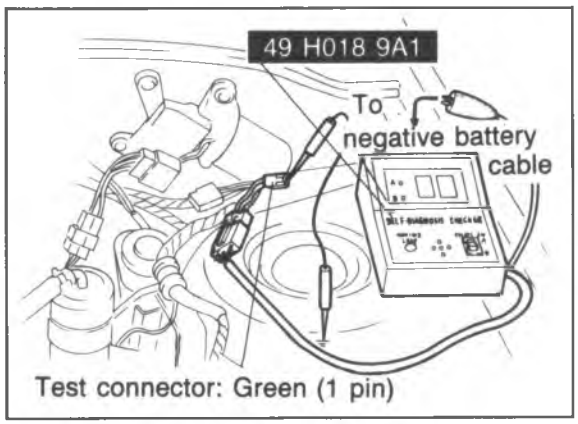

86U04A-035

3. Connect a jumper wire between the test connector (Green, 1-pin) and a ground.
4. Turn the ignition switch ON. Check if monitor lamp illuminates when each switch is made to function as described below.

Caution

a) If any one of the switches is activated, the monitor lamp will stay on.

b) Do not start the engine.

Procedure

Set conditions to deactivate each switch
- All accessories OFF
- Transmission in neutral
- All pedals released

Verify that monitor lamp does not illuminate

NO →

Check each switch and related wiring harness

• Cluch and Neutral switch	:Refer to page 4A—93
• Idle switch	:Refer to page 4A—101
• Brake light switch	:Refer to page 4A—93
• A/C switch	:Refer to section 16
• Headlight switch	:Refer to section 15
• Rear defroster switch	:Refer to section 15
• Blower switch	:Refer to section 15
• Inhibitor switch	:Refer to page 4A—94
• Water thermo switch	:Refer to section 3

YES ↓

Check each switch as described

Neutral and Clutch switch (MTX)

Shift transmission into gear
Check that monitor lamp illuminates with clutch pedal released

NO →

PC:
- Neutral or clutch switch malfunction (Refer to page 4A—93)
- Open circuit in related wiring hhharness
- Engine control 3D terminal malfunction (Refer to page 4A—92)

YES ↓

Depress clutch pedal
Check that monitor lamp does not illuminate
Return transmission to neutral

NO →

PC:
- Clutch switch malfunction (Refer to page 4A—93)

86U04A-036

Idle switch

Depress accelerator pedal, and check that the monitor lamp illuminates

NO →
PC:
- Idle switch malfunction (Refer to page 4A—101)
- Short circuit in wiring harness from idle switch to engine control unit
- Engine control unit (1E) terminal malfunction (Refer to page 4A—90)

YES ↓

Idle switch OK
Release accelerator pedal

86U04A-037

Brake light switch

Depress brake pedal
Check that monitor lamp illuminates

NO →
PC:
- Brake light switch malfunction (Refer to page 4A—93)
- Open circuit in wiring harness from brake light switch to engine control unit
- Engine control unit (1J) terminal malfunction (Refer to page 4A—90)

YES ↓

Brake light switch OK
Release brake pedal

86U04A-038

Blower switch

Turn blower switch to "3rd" position
Check that monitor lamp illuminates

NO →
PC:
- E/L control unit malfunction (Refer to page 4A—95)
- Blower switch malfunction (Refer to Section 15)
- Open circuit in the wiring harness from blower switch to engine control unit through E/L unit
- Engine control unit (1I) terminal malfunction (Refer to page 4A—90)

YES ↓

Blower switch OK

86U04A-039

A/C switch

Set blower switch to 1st position
Turn A/C switch ON
Check that monitor lamp illuminates

NO →
PC:
- E/L control unit malfunction (Refer to page 4A—95)
- A/C switch malfunction (Refer to section 16)
- Blower switch malfunction
- Open circuit in wiring harness from A/C switch to engine control unit through E/L unit
- Engine control unit (1L) terminal malfunction (Refer to page 4A—90)

YES ↓

A/C switch OK
Turn OFF A/C switch and blower switch

86U04A-040

Headlight switch

Turn ON headlight switch
Check that monitor lamp illuminates

NO →
PC: • E/L control unit malfunction (Refer to page 4A—95)
• Headlight switch malfunction (Refer to section 15)
• Open circuit in wiring harness from headlight switch to engine control unit through E/L unit
• Engine control unit (1I) terminal malfunction

YES ↓

Headlight switch OK
Turn OFF headlight switch

86U04A-041

Rear defroster switch

Turn ON rear defroster switch
Check that monitor lamp illuminates

NO →
PC: • E/L control unit malfunction (Refer to page 4A—95)
• Rear defroster switch malfunction (Refer to Section 15)
• Open circuit in wiring harness from rear defroster switch to engine control unit through E/L unit
• Engine control unit (1I) terminal malfunction

YES ↓

Rear defroster switch OK
Turn OFF rear defroster switch

86U04A-042

Inhibitor switch

Shift transmission into gear
Check that monitor lamp illuminates

NO →
PC: • Inhibitor switch or EC-AT unit malfunction (Refer to page 4A—94)
• Open or short circuit in related wiring harness
• Control unit (3D) terminal malfunction (Refer to page 4A—92)

YES ↓

Inhibitor switch and EC-AT unit OK
Shift into "P" or "N" range

86U04A-043

Water thermo switch circuit (not included in switch inspection)

Warning
The electrical fan operates when the connector is disconnected. Use caution.

Disconnect water thermo switch connector
Check that monitor lamp illuminates

NO →
PC: • E/L control unit malfunction (Refer to page 4A—95)
• Water thermo switch or relay malfunction (Refer to section 3)
• Short circuit wiring harness from water thermo switch to engine control unit through E/L unit

YES ↓

Water thermo switch circuit OK
Connect water thermo switch connector

86U04A-044

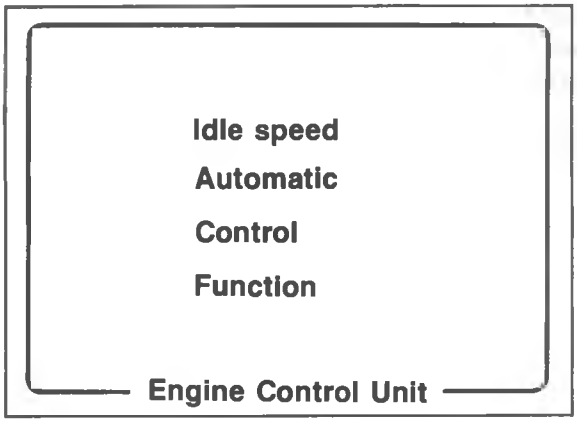

86U04A-045

IDLE ADJUSTMENT

IDLE SPEED

Because the idle speed is controlled automatically by the engine control unit through the idle speed control (ISC) solenoid valve, usually it is not necessary to check and adjust the idle speed.
However, the idle speed should be adjusted when rough idling occurs when the test connector (Green, 1-pin) is grounded.

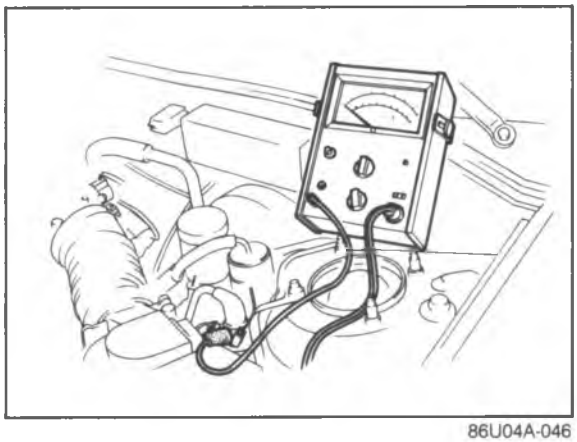
86U04A-046

Preparation

1) Check the condition of the engine (plugs, leaks in hoses, etc.).
2) Make sure all accessories are OFF.
3) Warm up the engine and run it for **Three minutes at 2,500—3,000 rpm** in neutral.
4) Check the initial ignition timing and adjust if necessary.

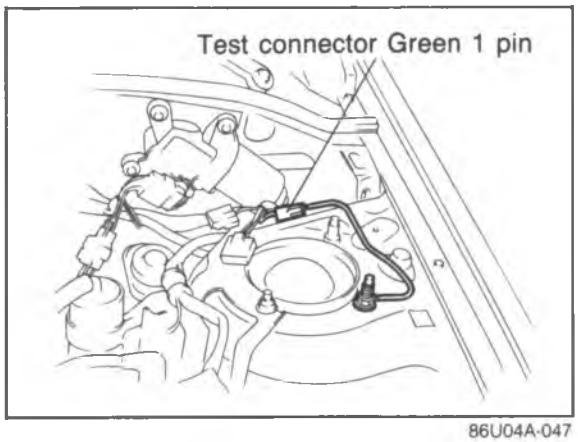

86U04A-047

Inspection and Adjustment

1. Ground the test connector with a jumper wire.

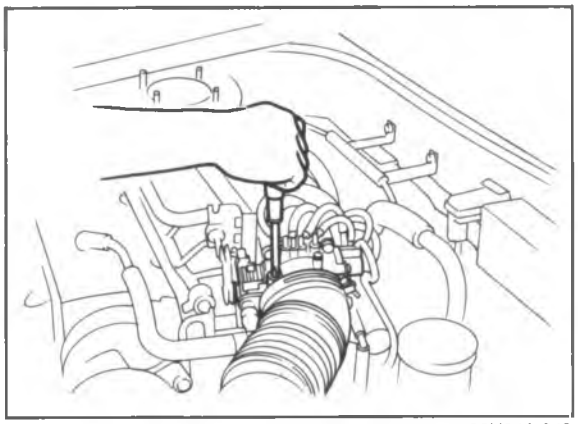
86U04A-048

2. Check that the idle speed is within specification.

Idle speed: 750 ± 25 rpm MTX: Neutral
ATX: P range

3. If the idle speed is not within specification, remove the blind cap from the throttle body and adjust it by turning the air adjust screw.
4. After adjusting the idle speed, install the blind cap and disconnect the jumper wire from the test connector.

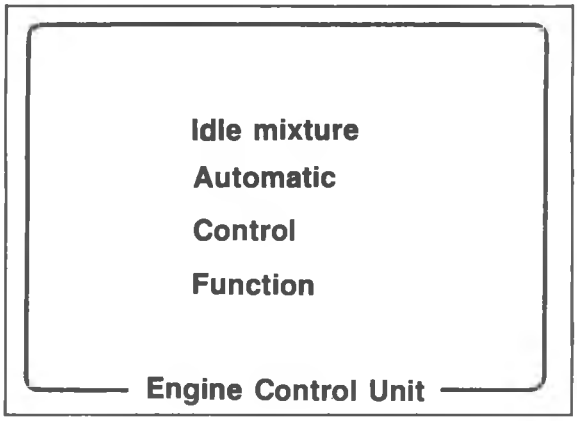

86U04A-049

IDLE MIXTURE

Because an automatic compensation function for air/fuel mixture is built into the engine control unit, it is not necessary to check and adjust the idle mixture.

INTAKE AIR SYSTEM

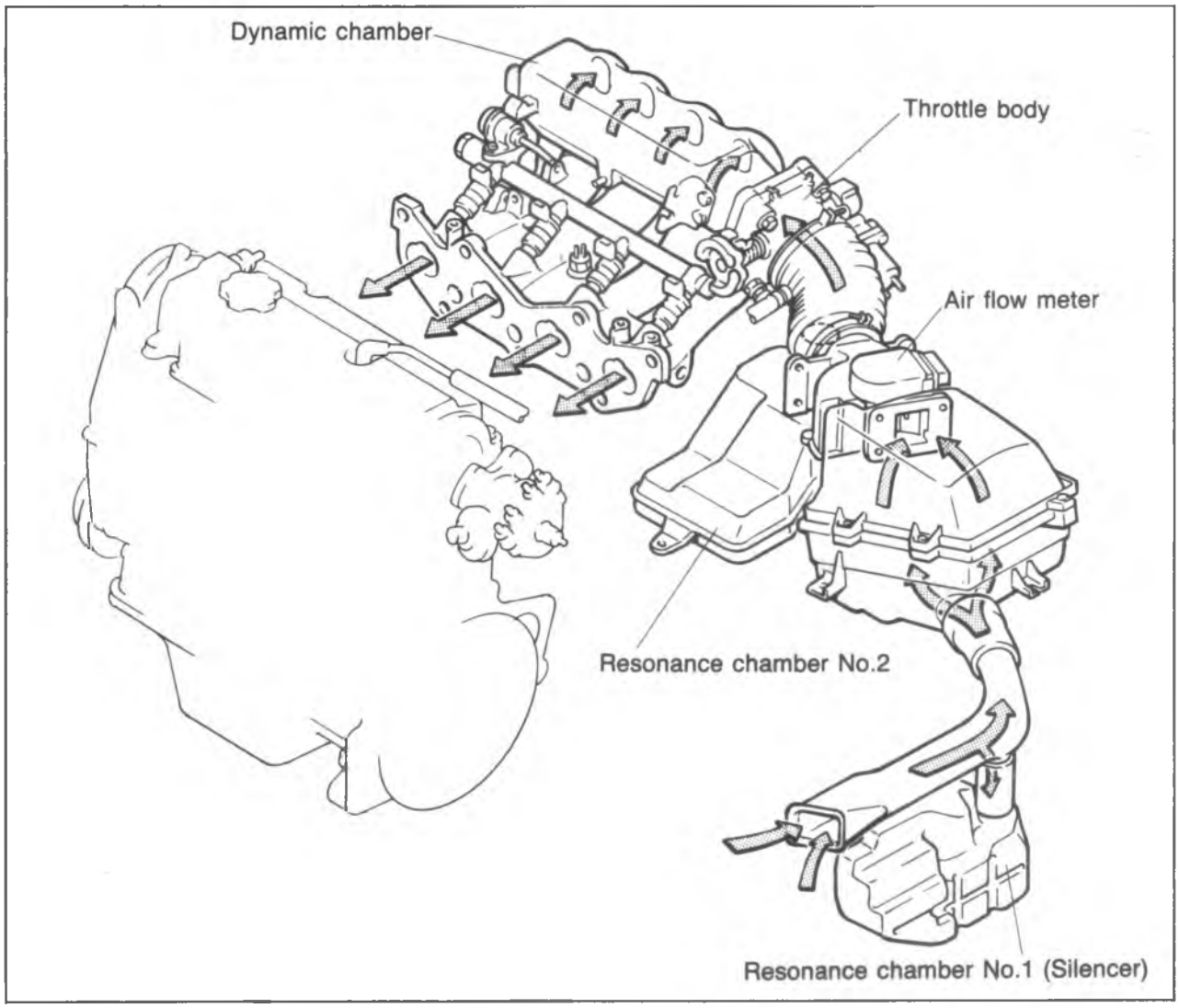

86U04A-050

This system controls the air required by the engine for operation. The system consists of the air duct, air cleaner, air flow meter, throttle body, dynamic chamber, and intake manifold.
This system also has a resonance chamber to improve mid-range torque characteristics.

COMPONENT DESCRIPTIONS

Component	Function	Remarks	Application	
			New model	Previous model
Air cleaner	Filters air into throttle body		○	○
Air flow meter	Detects amount of intake air; sends signal to control unit	Intake air temp sensor and fuel pump switch are integrated	○	○
Throttle sensor	Detects throttle valve opening angle; sends signal to control unit	Installed on throttle body	○	○
Throttle body	Controls intake air quantity	Integrated throttle sensor and idle switch	○	○

86U04A-051

REMOVAL

Caution
Before removing the following parts, release the fuel pressure from fuel system to reduce the possibility of injury or fire. (Refer to page 4A—46.)

Remove in the sequence shown in the figure.

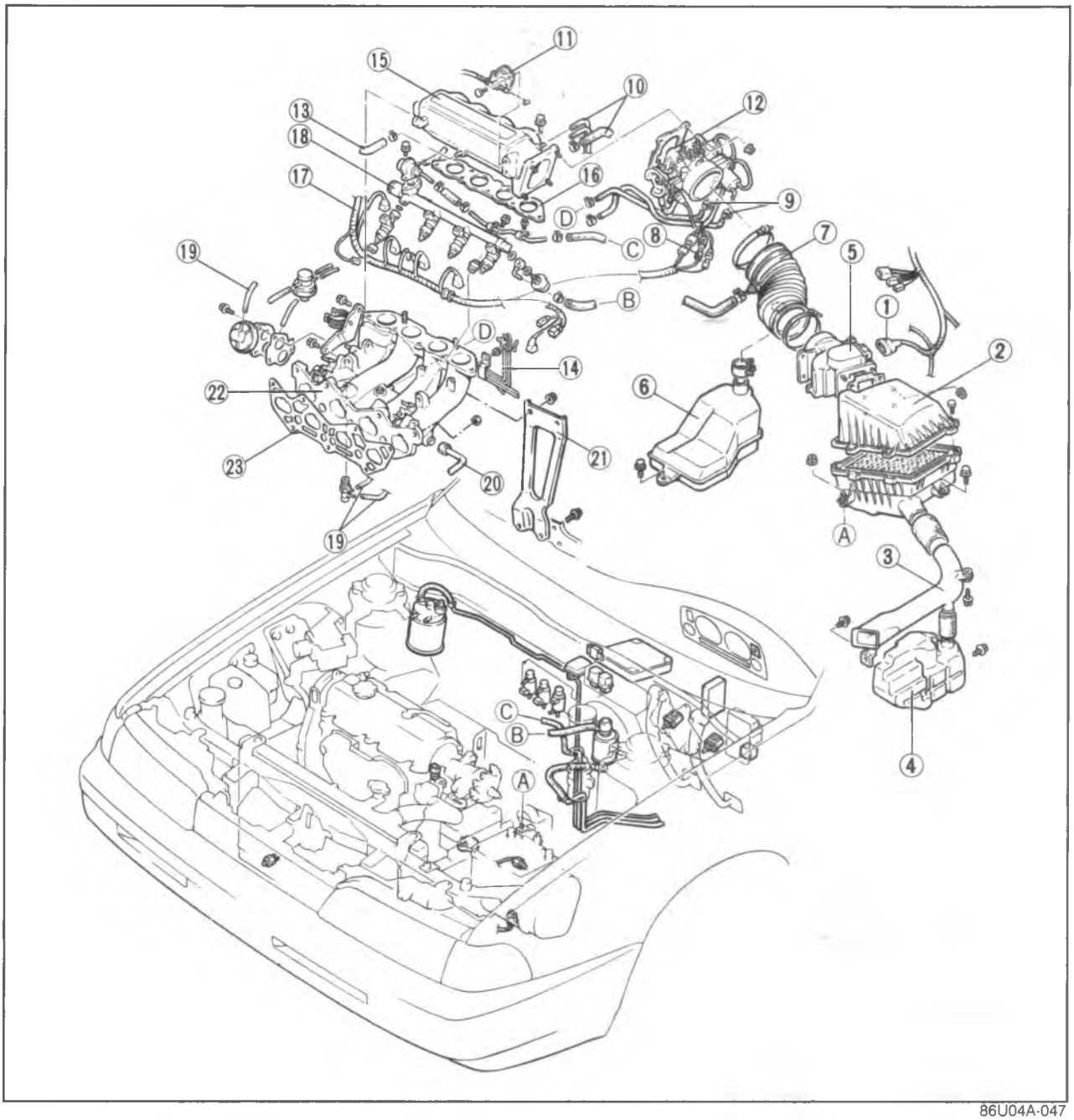

86U04A-047

1. Air flow meter connector
2. Air cleaner
3. Air duct
4. Resonance chamber No.1
5. Air flow meter
6. Resonance chamber No.2
7. Air hose
8. Connectors
9. Water hoses
10. Vacuum hoses
11. Accelerator cable
12. Throttle body
13. PCV hose
14. Vacuum pipe assembly
15. Dynamic chamber
16. Gasket
17. Wiring harness
18. Delivery pipe assembly
19. Vacuum hoses
20. EGR pipe
21. Intake manifold bracket
22. Intake manifold
23. Gasket

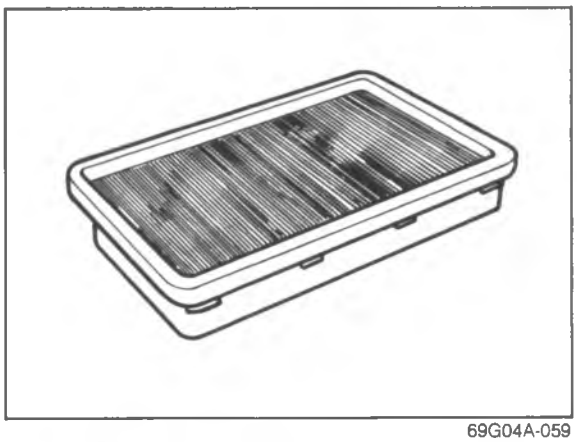

69G04A-059

PARTS INSPECTION

Air Cleaner Element

1. Check the condition of the air cleaner element.
2. Replace, if necessary.

Caution
Do not use the compressed air to clean the air cleaner element.

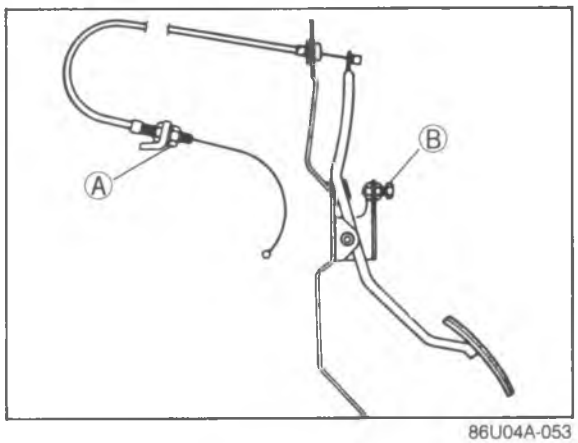

86U04A-053

Accelerator Cable

1. Inspect the deflection of the cable. If the deflection is not within **1—3 mm (0.04—0.12 in.)**, adjust by turning nuts A.
2. Depress the accelerator pedal to the floor and confirm that the throttle valve is fully opened. Adjust by turning bolt B if necessary.

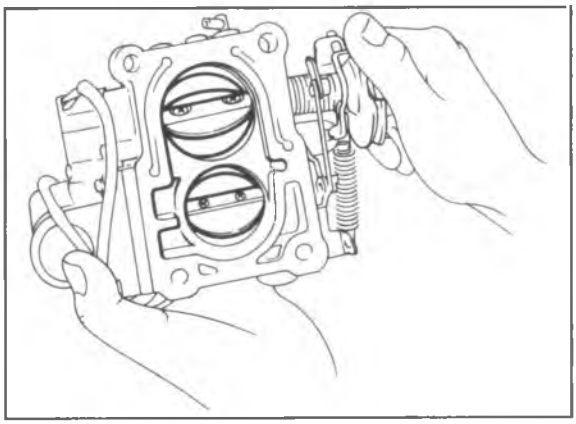

86U04A-054

Throttle Body

Note
The No. 2 throttle valve is preset at the factory to begin opening after the No. 1 throttle valve has opened approx. 25 degrees (MTX) or 10 degrees (ATX).

1. Check that the No. 1 and No. 2 throttle valves move smoothly when the throttle lever is moved from fully closed to fully open.
2. Replace, if necessary.

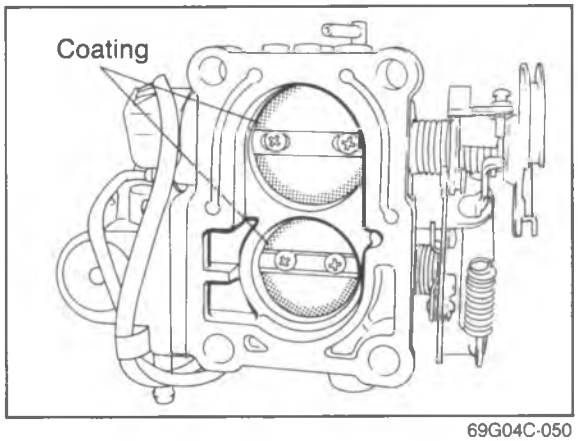

69G04C-050

Caution
Do not remove the thin sealing coating from the throttle valve or bore.

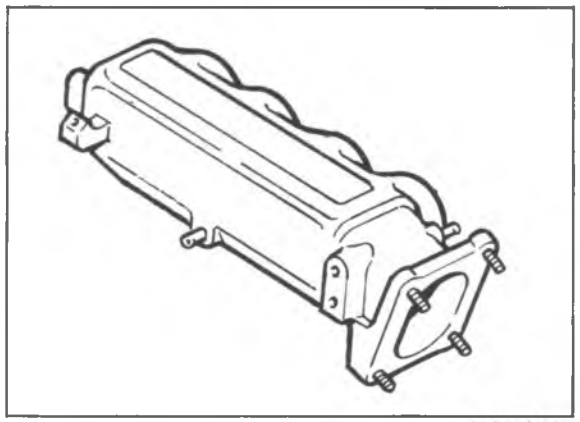

69G04A-062

Dynamic Chamber

1. Visually check the dynamic chamber for damage.
2. Replace, if necessary.

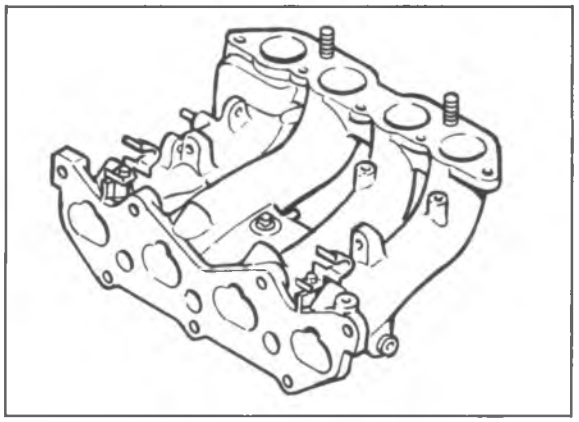

69G04A-064

Intake Manifold

1. Visually check the intake manifold for damage.
2. Replace, if necessary.

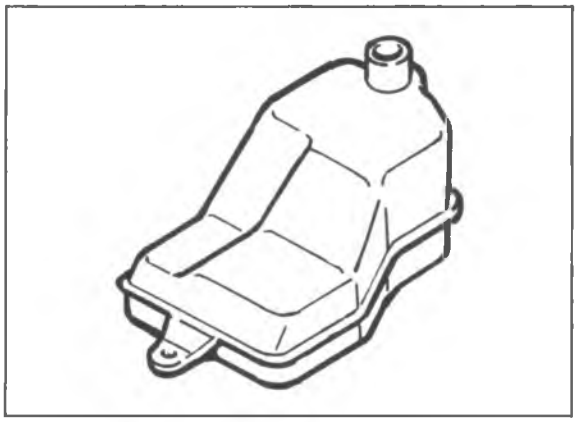

69G04C-054

Resonance Chamber

1. Visually check the resonance chamber for damage.
2. Replace, if necessary.

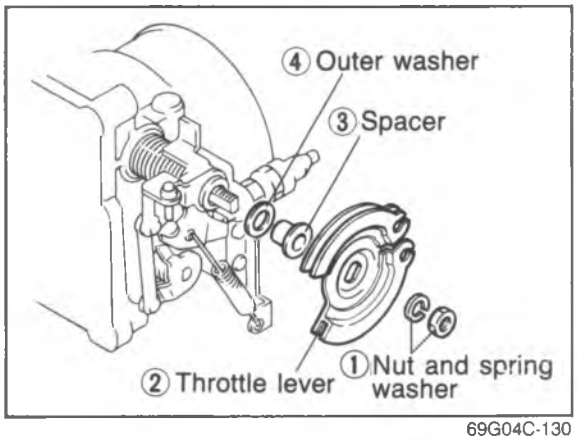

69G04C-130

REPLACEMENT
Throttle Lever
Removal

Caution
When loosening the throttle lever nut, hold the throttle valves fully open to prevent damaging the idle switch.

Remove the throttle lever in the sequence shown in the figure.

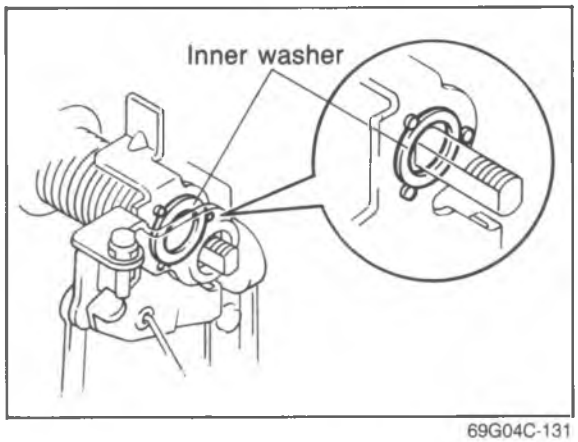

69G04C-131

Installation
1. Check that the inner washer is in the proper position as shown in the figure.
2. Assemble the spacer and outer washer and install them onto the throttle shaft.
3. Install the throttle lever onto the throttle shaft.

Caution
When tightening the throttle lever nut, hold the throttle valves fully closed to prevent bending the stopper lever.

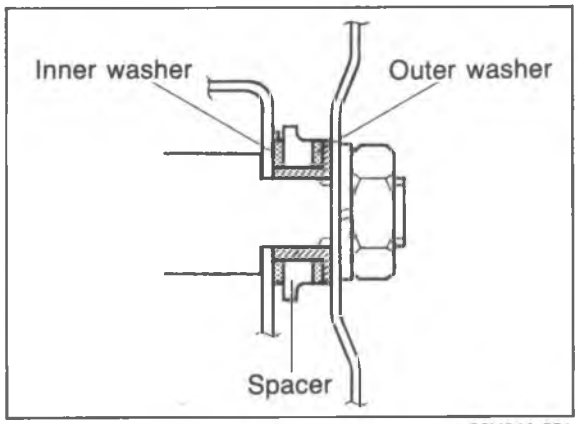

86U04A-251

4. Tighten the throttle lever nut.

Tightening torque:
16—23 N·m (1.6—2.3 m-kg, 12—17 ft-lb)

5. Check that the inner and outer washer and spacer are assembled correctly as shown.
6. Check that No.1 and No.2 throttle valves move smoothly and that No.2 throttle valve is closed completely when the No.1 throttle valve is closed.
7. Check the operation of the idle switch. (Refer to page 4A—101)

INSTALLATION

Install in the reverse order of removal, referring to the installation note.

Torque Specification

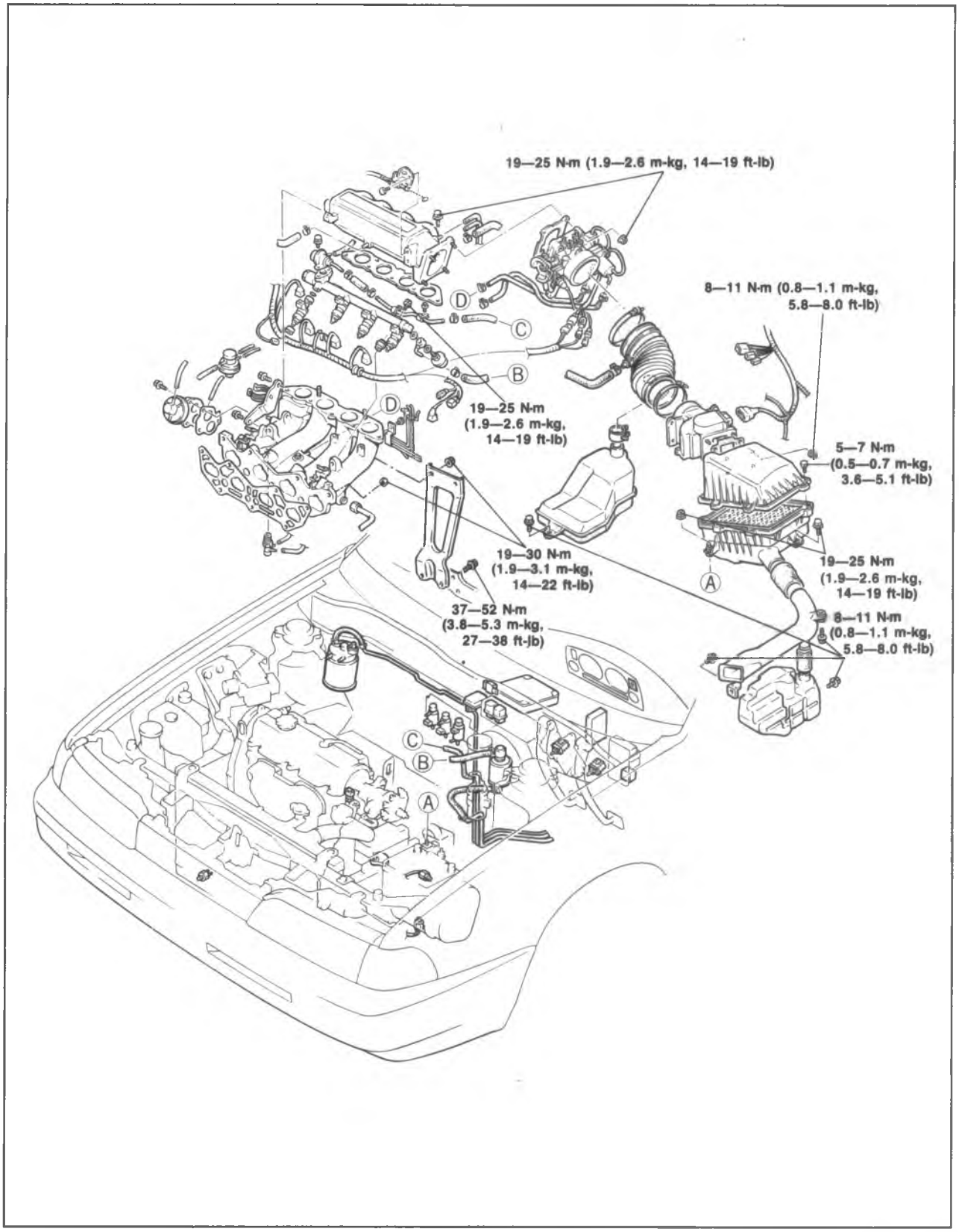

86U04A-055

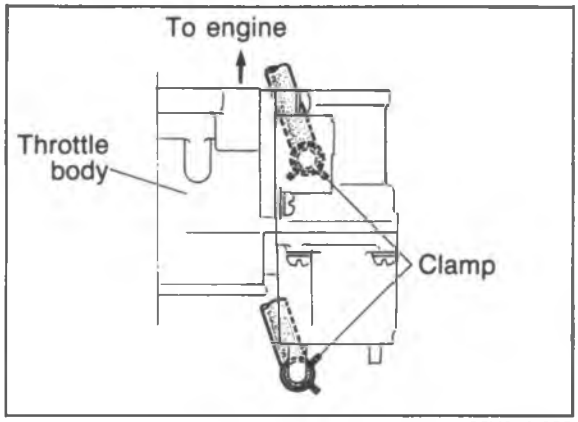

86U04A-056

Installation Note
Water hose spring clamps
Face the clamp end as shown in the figure.

Gasket
Use new gaskets at the intake manifold, dynamic chamber, and throttle body.

IDLE SPEED CONTROL (ISC) SYSTEM

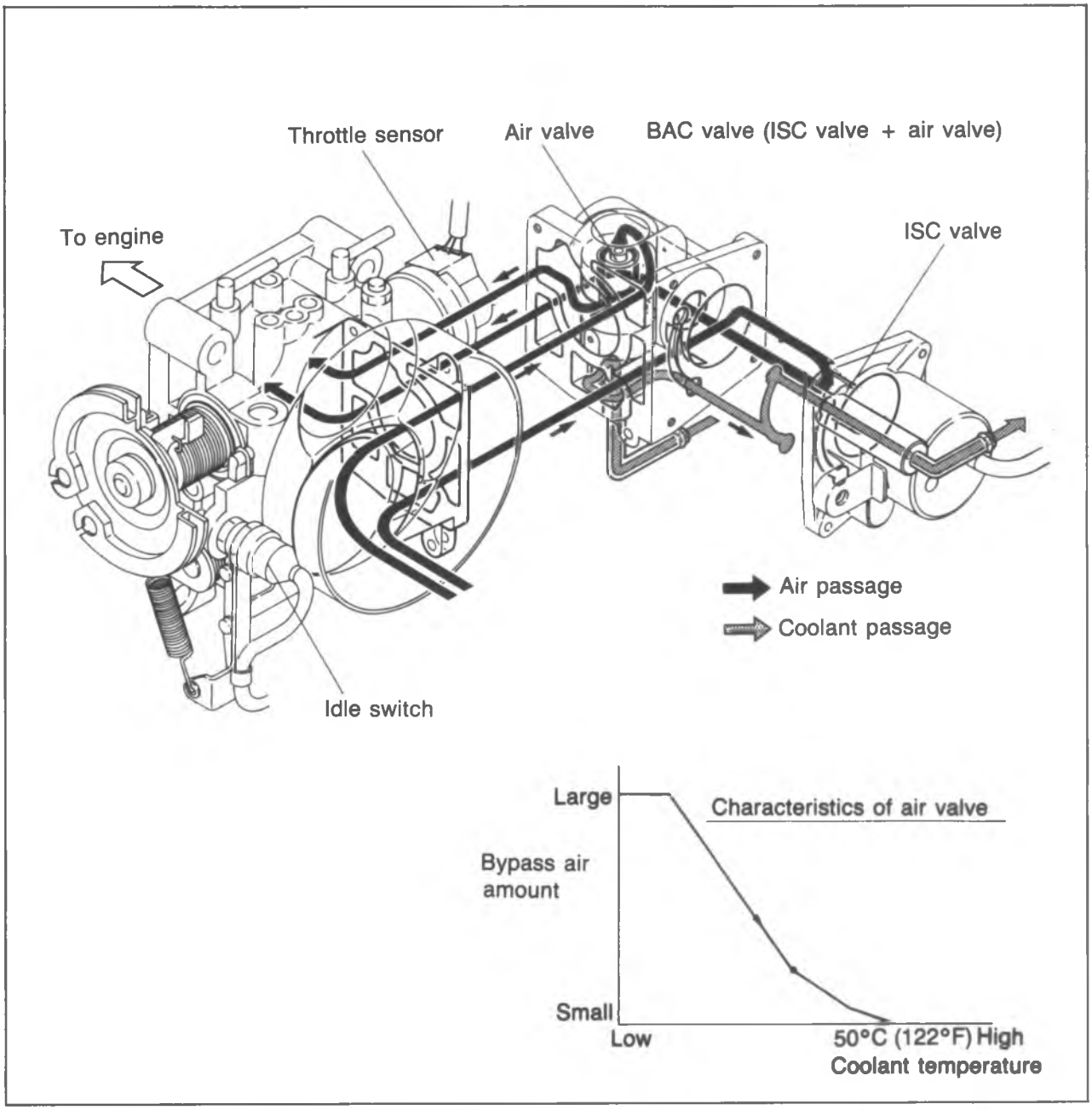

86U04A-057

To improve idle smoothness, the ISC system controls the intake air amount by regulating the bypass air amount that passes through the throttle body.
This system consists of the BAC valve and the control system.

The BAC valve consists of the air valve which functions only during cold engine conditions **(below 50°C (122°F))** and the ISC valve which works throughout the entire engine speed range.

COMPONENT DESCRIPTIONS

Component	Function	Remarks	Application	
			New model	Previous model
Air valve	When cold, supplies bypass air into dynamic chamber	• Engine speed increased to shorten warm-up period • Thermo wax type • Installed in BAC valve	○	○
Clutch switch	Detects in-gear condition; sends signal to control unit	Switch ON when clutch pedal released	○	○
E/L control unit	Detects that E/L is being applied; sends signal to control unit		○	X
Engine control unit	Detects signals from input sensors and switches; controls solenoid valve (Idle speed control)		○	○
Idle switch	Detects when throttle valve fully closed; sends signal to control unit	Installed on throttle body	○	○
Ignition coil (–) terminal	Detects engine speed; sends signal to control unit		○	○
Inhibitor switch	Detects in-gear condition; sends signal to EC-AT control unit	Switch ON in "N" or "P" range	○	○
Neutral switch	Detects in-gear condition; sends signal to control unit	Switch ON when in-gear	○	○
P/S pressure switch	Detects P/S operation; sends signal to control unit	P/S: ON when steering wheel turned right or left	○	○
Solenoid valve (Idle speed control)	Controls bypass air amount	• Controlled by duty signal from control unit • With integrated air valve • Works idle-up	○	X
Test connector	For Self-Diagnosis Checker and idle speed adjustment	1-pin connector (Green)	○	X
Throttle sensor	Detects throttle valve opening angle; sends signal to control unit	Installed on throttle body	○	○

86U04A-058

TROUBLESHOOTING

Check the condition of the wiring harness and connectors before checking the sensors or switch.

Note
Make the system inspection first. If no problem is found, continue with the next system inspection of the Troubleshooting Guide. (Refer to pages 4A—8 and 9.)

Symptom \ Possible cause / Page		Air valve	P/S pressure switch	Solenoid valve (idle speed control)	Electrical load control unit	Engine control unit terminal			System inspection
						1K	1W	2Q	
		4A—42	4A—94	4A—42	4A—95	4A—90	4A—91	4A—92	4A—41
Engine stalls	While warming up	4		1			2	3	
	After warming up		2	1	3	5	4	6	
Rough idle	While warming up	5		2			3	4	1
	After warming up		3	2	4	6	5	7	1
High idle speed after warming up		7	3	2	4	6	5	7	1
Runs rough on deceleration				2			3	4	1
Afterburn in exhaust system		5		2			3	4	1
Fails emission test		5		2			3	4	1

86U04A-059

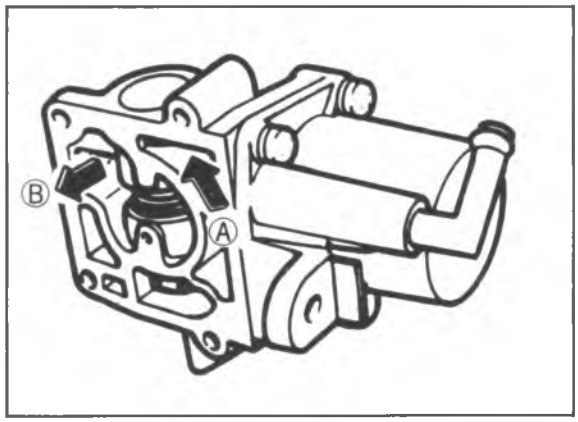

86U04A-063

BAC Valve
Air valve

1. Remove the BAC valve from the throttle body.
2. Blow air throgh the valve from port A and check that air comes out of port B when the BAC valve is cold.
3. If not correct, replace the BAC valve.

Note
Refer to "Installation" on this page for the BAC valve installation.

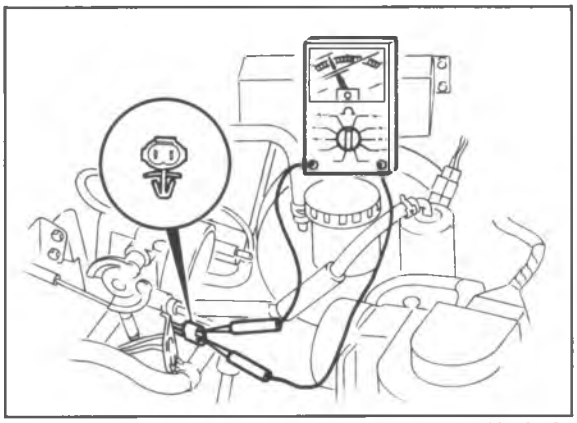

86U04A-064

ISC valve

1. Disconnect the ISC valve connector.
2. Connect an ohmmeter to the terminals of the ISC valve.
3. Check the resistance.

Resistance (normal operating temperature): 6.3—9.9 Ω

4. If not correct, replace the BAC valve.

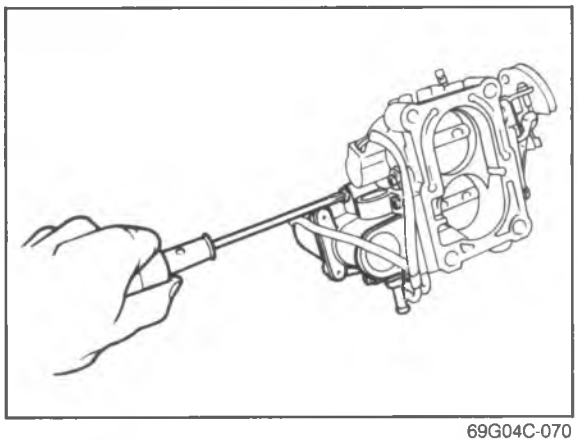

69G04C-070

Removal

1. Remove the screws.
2. Remove the BAC valve from the throttle body.

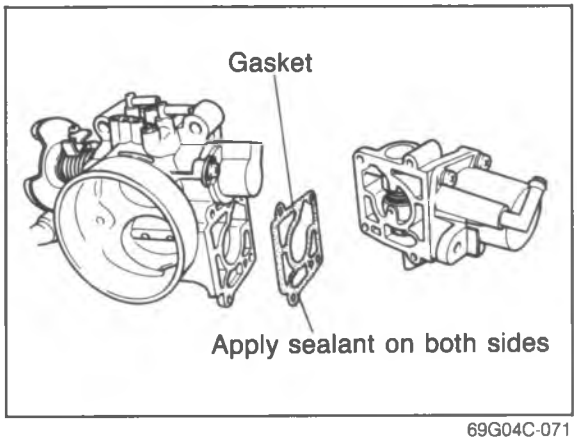

69G04C-071

Installation

Caution
Use a new gasket.

1. Remove any dirt or old sealant from the contact surfaces.
2. Apply sealant to both sides of the gasket.
3. Tighten the screws.

FUEL SYSTEM

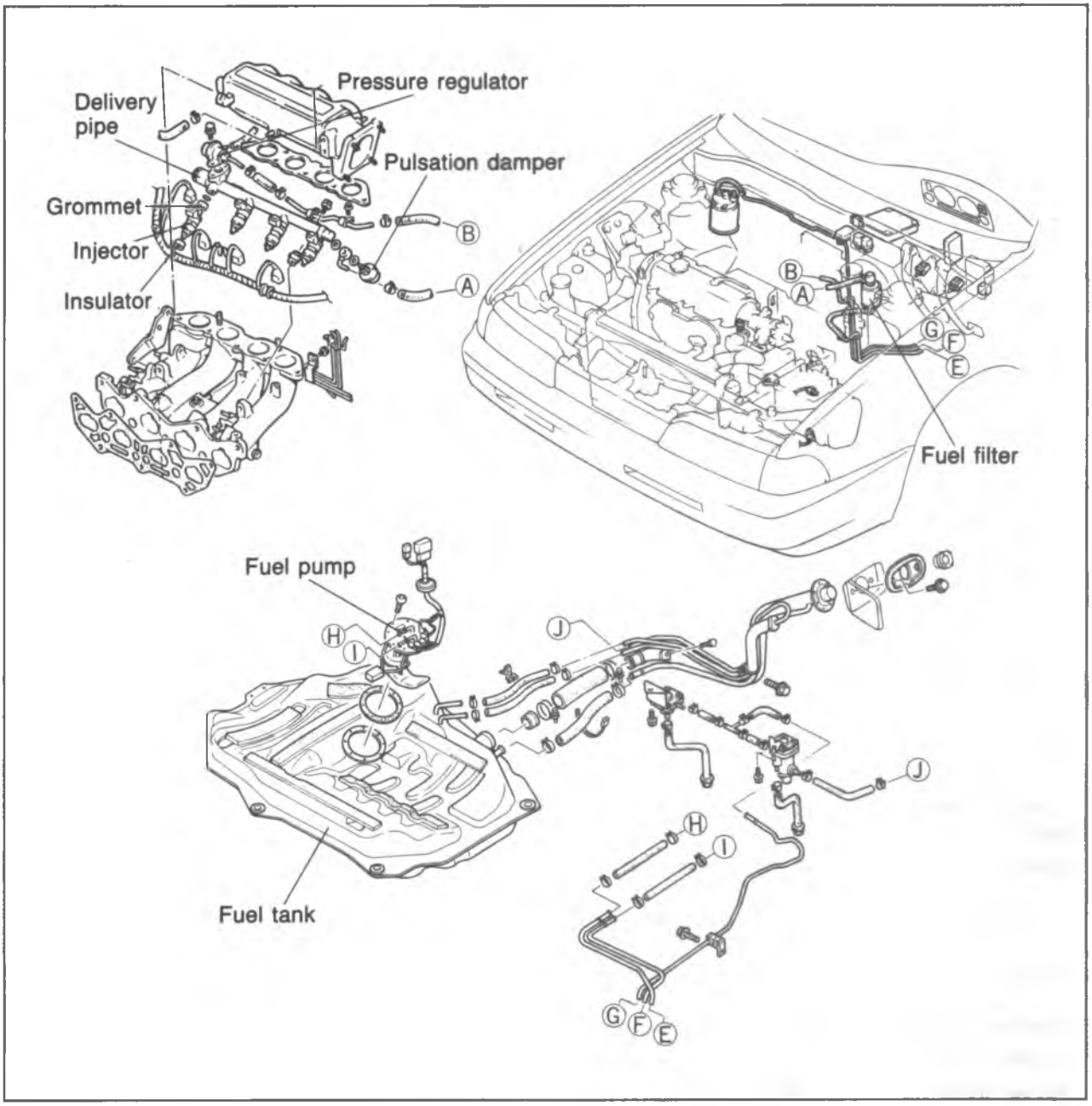

86U04A-065

This system supplies the fuel necessary for combustion at a constant pressure to the injectors. Fuel is metered and injected into the intake manifold according to the injection control signals from the engine control unit. It consists of the fuel pump, fuel filters, delivery pipe, pulsation damper, pressure regulator, injectors, fuel pump switch (incorporated in the air flow meter), and the circuit opening relay. The fuel pump is mounted in the fuel tank to minimize the operating noise of the fuel pump. The injectors are directly supplied with battery voltage through the main relay. The connector of the injectors is blue to distinguish the injectors for the non-turbocharged engine from those of the turbocharged engine.

COMPONENT DESCRIPTIONS

Component	Function	Remarks	Application	
			New model	Previous model
Air flow meter	Detects amount of intake air; sends signal to control unit	Intake air temp sensor and fuel pump switch are integrated	○	○
Atmospheric pressure sensor	Detects atmospheric pressure; sends signal to control unit		○	○
Circuit opening relay	Voltage for fuel pump while engine running		○	○
Clutch switch	Detects in-gear condition; sends signal to control unit	Switch ON when clutch pedal released	○	○
EC-AT control unit	Detects N or P range; sends signal to control unit		○	X
Engine control unit	Detects signals from input sensors and switches; controls injector operation		○	○
Fuel filter	Filters particles from fuel		○	○
Fuel pump	Provides fuel to injectors	• Operates while engine running • Installed in fuel tank	○	○
Idle switch	Detects when throttle valve fully closed; sends signal to control unit	Installed on throttle body	○	○
Ignition coil (–) terminal	Detects engine speed; sends signal to control unit		○	○
Ignition switch (ST position)	Sends engine cranking signal to control unit		○	○
Inhibitor switch	Detects in-gear condition; sends signal to EC-AT control unit	Switch ON in "N" or "P" range	○	○
Injector	Injects fuel into intake port	• Controlled by signals from control unit • High-ohmic injector	○	○
Intake air thermo sensor	Detects intake air temperature; sends signal to control unit	Installed in air flow meter	○	○
Main relay	Supplies electric current to injectors and control unit		○	○
Neutral switch	Detects in-gear condition; sends signal to control unit	Switch ON when in-gear	○	○
Oxygen sensor	Detects Oxygen concentration; sends signal to control unit	Zirconia ceramic and platinum coating	○	○
Pressure regulator	Adjusts fuel pressure supplied to injectors		○	○
Pulsation damper	Absorbs fuel pulsation		○	○
Speedometer	Detects vehicle speed; sends signal to control unit	ON: Above 113 mph (180 km/h)	○	X
Throttle sensor	Detects throttle valve opening angle; sends signal to control unit	Installed on throttle body	○	○
Water thermo sensor	Detects coolant temperature; sends signal to control unit		○	○
Water thermo switch	Detects radiator coolant temperature; sends signal to control unit	ON: above 17°C (63°F)	○	○

86U04A-066

TROUBLESHOOTING

Check the condition of the wiring harness and connectors before checking the sensors or switches.

Symptom \ Possible cause / Page		Air flow meter	Atmospheric pressure sensor	Oxygen sensor	Throttle sensor	Water thermo sensor	Water thermo switch	Fuel pump	Injector	Fuel pressure	Engine control unit terminal	
											3C 3E	3B
		4A—96	4A—103	4A—102	4A—97	4A—101	4A—101	4A—50	4A—52	4A—49	4A—92	4A—92
Hard start or won't start (Cranks OK)			5			4		1	3			2
Engine stalls	While warming up	4				3			2	1	5	
	After warming up	1							3	2	4	
Rough idle	While warming up	4				3			2	1		
	After warming up	1	2						4	3		
Poor acceleration, hesitation, or lack of power		1			3				4	2		
Runs rough on deceleration		1							2			
Afterburn on deceleration		1							2			
Poor fuel consumption		5	6	4		3			2	1		
Fails emission test				1			2					
Engine stalls or rough after hot starting		1							3	2		

86U04A-067

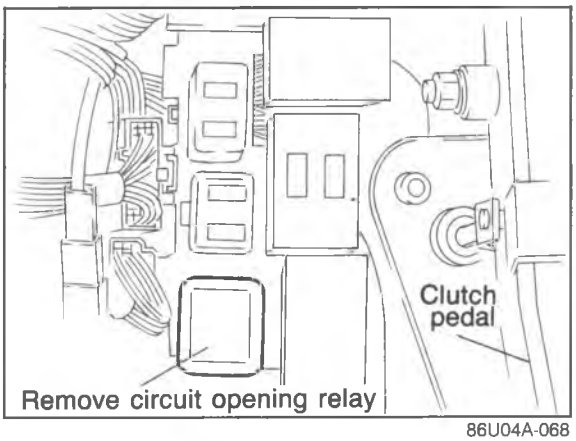

86U04A-068

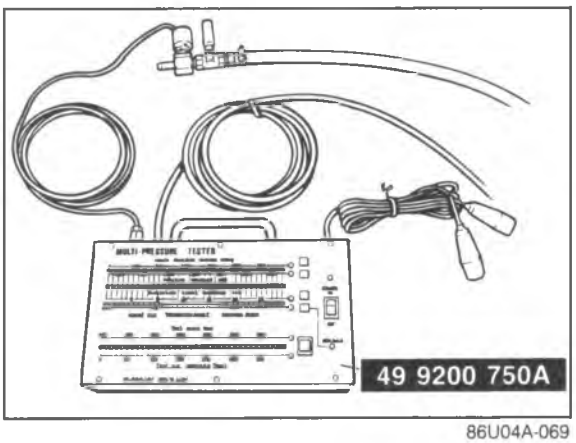

86U04A-069

FUEL PRESSURE RELEASE AND SERVICING FUEL SYSTEM

Fuel in the fuel system remains under high pressure even when the engine is not running.

a) Before disconnecting any fuel line, release the fuel pressure from the fuel system to reduce the possibility of injury or fire.
   1. Start the engine.
   2. Disconnect the circuit opening relay.
   3. After the engine stalls, turn OFF the ignition switch.
   4. Reconnect the circuit opening relay.

b) Use a rag as protection from fuel spray when disconnecting the hoses.
   Plug the hoses after removal.

c) When inspecting the fuel system, use the **SST**.

MULTI-PRESSURE TESTER (49 9200 750A)

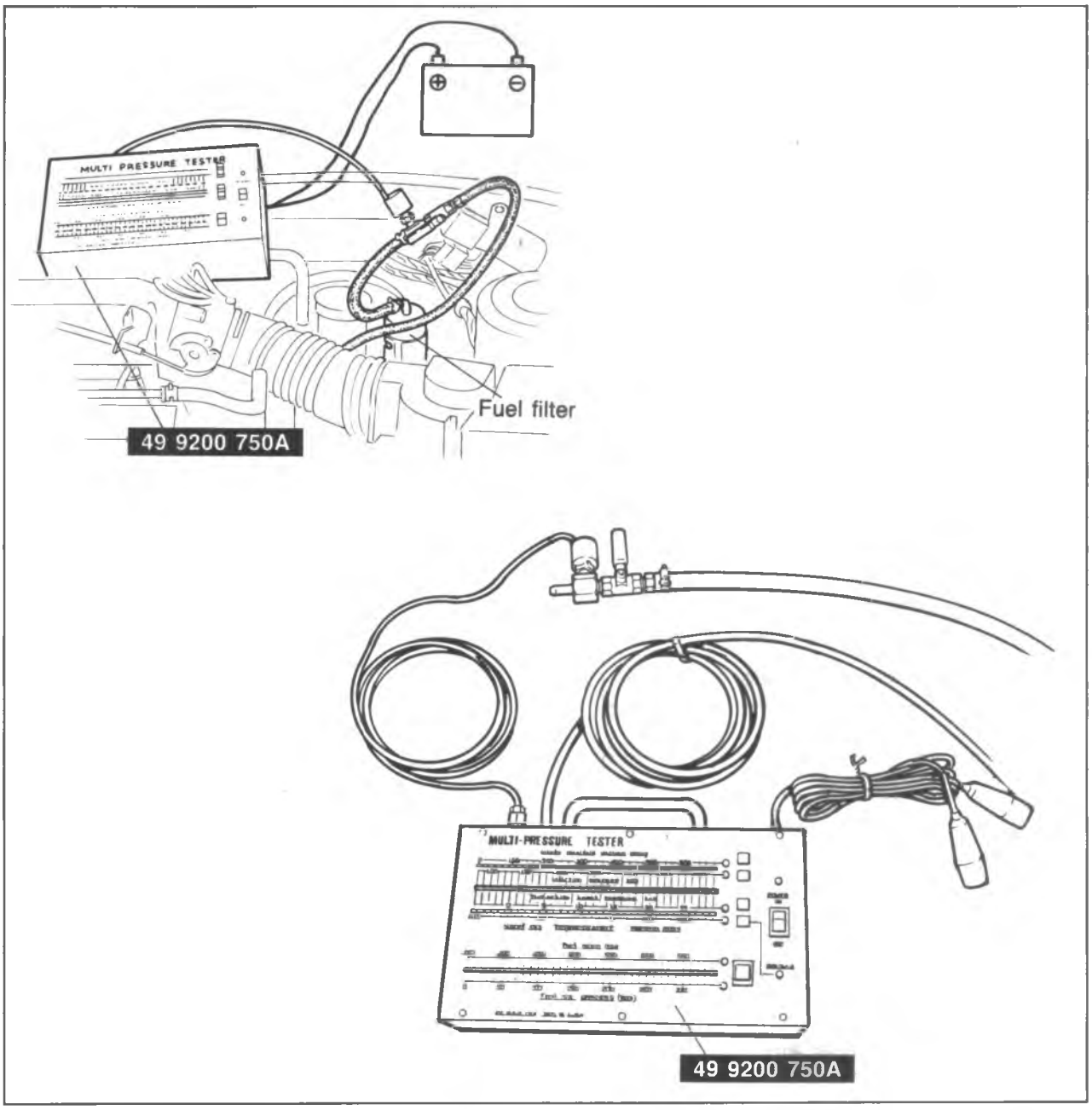

69G04A-099

The **MULTI-PRESSURE TESTER** (49 9200 750A) has been developed to check the fuel pressure and intake manifold vacuum. These can easily be inspected by setting the buttons on the tester.

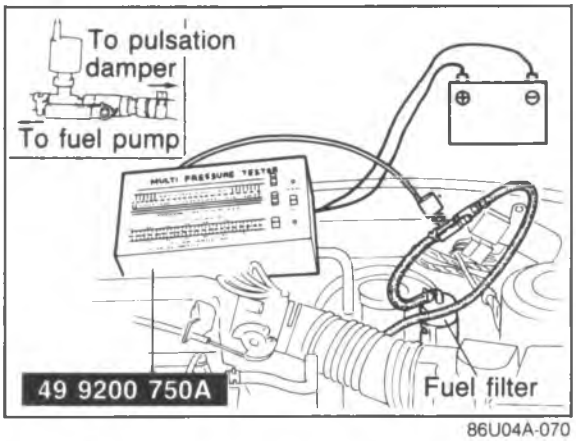

86U04A-070

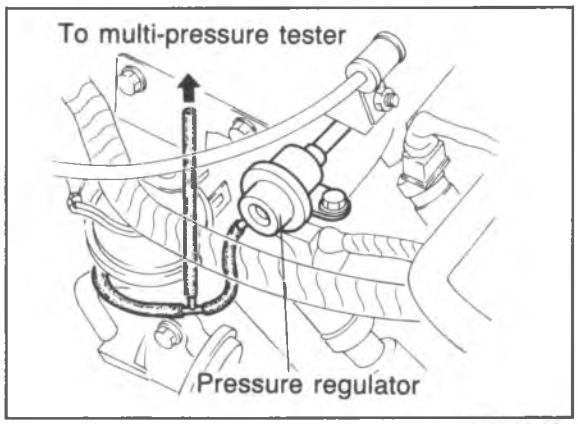

86U04A-071

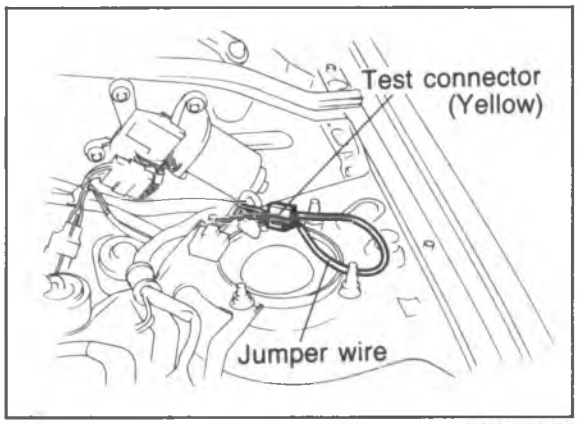

86U04A-072

How to Connect Multi-Pressure Tester

Warning
Before connecting the SST, release the fuel pressure from the fuel system to reduce the possibility of injury or fire. (Refer to page 4A—46.)

1. Disconnect the negative battery terminal.
2. Disconnect the fuel main hose from the fuel filter.
3. Connect the **SST** between the fuel main hose and fuel pump with the adapter.

Caution
Do not reverse the adapter connection.

4. Disconnect the vacuum hose from the pressure regulator control solenoid valve. Connect the **SST** vacuum hose with a three-way joint.
5. Connect the negative battery terminal.
6. Connect the **SST** to the battery.
7. Connect the terminals of the test connector (Yellow) with a jumper wire. Turn the ignition switch ON to operate the fuel pump.
8. Check for fuel leaks.

Caution
After checking for fuel leakage, turn the ignition switch OFF and disconnect the jumper wire from the test connector.

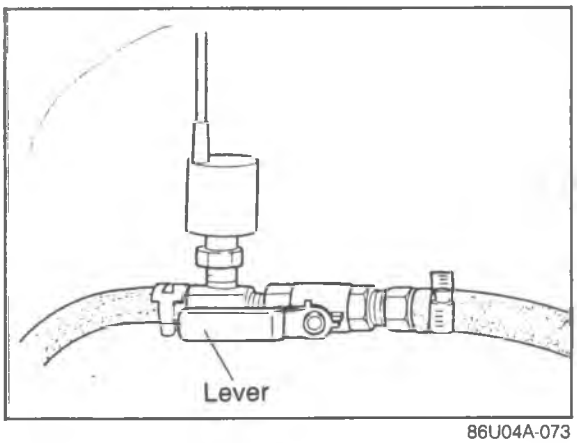

86U04A-073

FUEL PRESSURE

Note
a) When inspecting fuel pressure, use the SST. (Refer to page 4A—48).
b) Warm up the engine to normal operating temperature.

Injection Pressure

1. Set the lever on the adapter as shown in the figure.

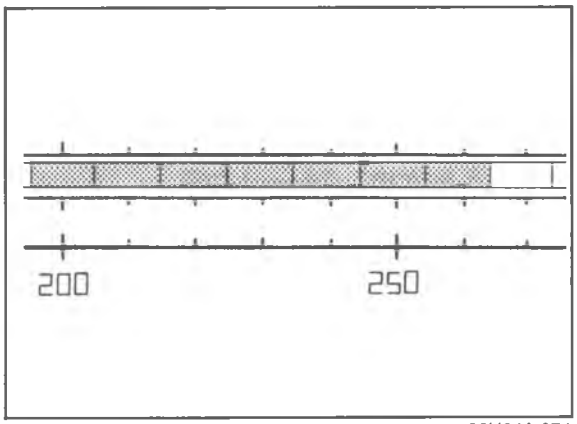

86U04A-074

2. Run the engine and measure the injection pressure at various speeds.

   Injection pressure: Approx. 235—275 kPa (2.4—2.8 kg/cm^2, 34—40 psi)

3. If not within specification, check the fuel pump pressure and fuel line pressure.

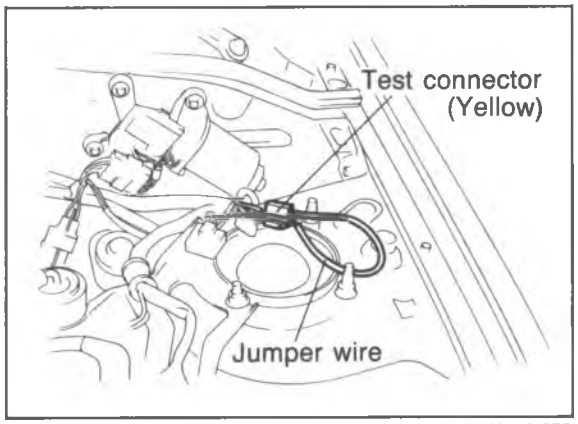

86U04A-075

Fuel Pump Pressure

1. Connect the terminals of the test connector (Yellow) with a jumper wire.
2. Turn the ignition switch ON to operate the fuel pump.
3. Set the lever on the adapter as shown in the figure.
4. Check the fuel pump pressure.

   Fuel pump pressure: 441—588 kPa (4.5—6.0 kg/cm^2, 64—85 psi)

5. If the fuel pump pressure is not within specification, check the following;

   No pressure
   •Fuel pump operation (Refer to page 4A—50.)
   Low pressure
   •Fuel pump feeding capacity (Refer to page 4A—51.)
   High pressure
   •Replace the fuel pump

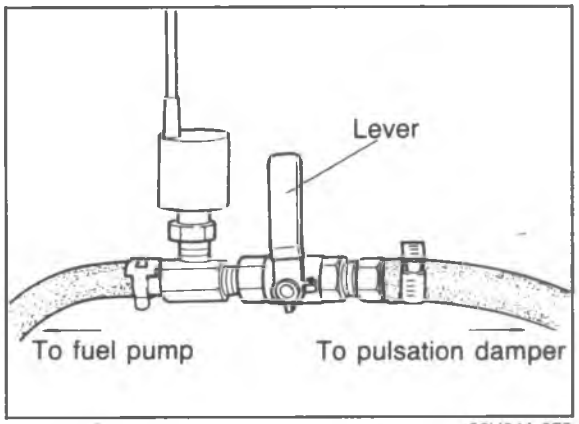

86U04A-076

6. After checking the fuel pump pressure, disconnect the jumper wire from the test connector.

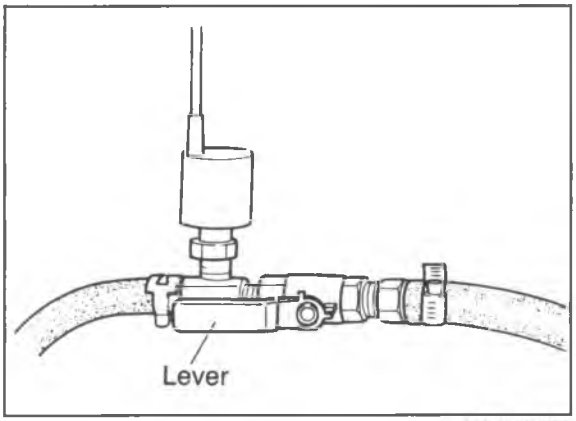

86U04A-077

Fuel Line Pressure

1. Start the engine and run it idle.
2. Set the lever on the adapter as shown in the figure.
3. Check the fuel line pressure.

   Fuel line pressure: Approx. 186—226 kPa (1.9—2.3 kg/cm^2, 27—33 psi)

4. If not within specification, check the vacuum hose.

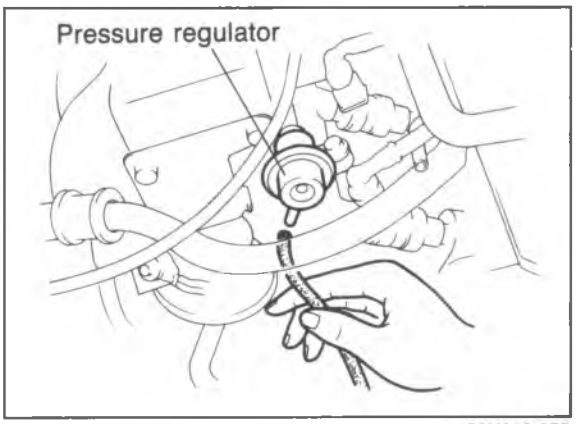

86U04A-078

5. Disconnect the vacuum hose from pressure regulator, and place a finger over the end of the hose.
6. Check the fuel line pressure.

   Fuel line pressure: 235—275 kPa (2.4—2.8 kg/cm^2, 34—40 psi)

7. If not within specification, replace the pressure regulator.
8. Connect the vacuum hose to pressure regulator.

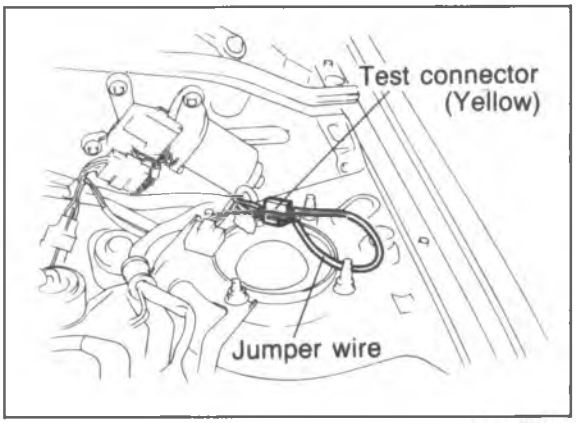

86U04A-079

FUEL PUMP

Operation Test

1. Connect a jumper wire to the check connector (Yellow).
2. Remove the fuel filler cap.
3. Turn the ignition switch ON.
4. Listen for operational sound of the fuel pump at the filler inlet.
5. Install the fuel filler cap.

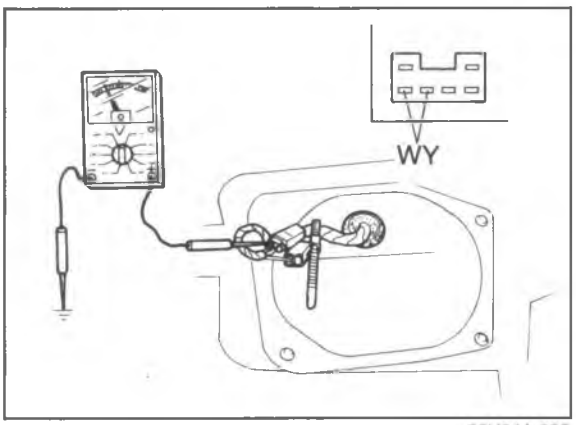

86U04A-080

6. If no sound was heard, check the voltage at the feel pump connector (WY wire and a ground).

   Voltage: 12V

7. If the voltage is normal, replace the fuel pump.
8. If not correct, check the circuit opening relay (Refer to page 4A—87) and its circuits.
9. Disconnect the jumper wire.

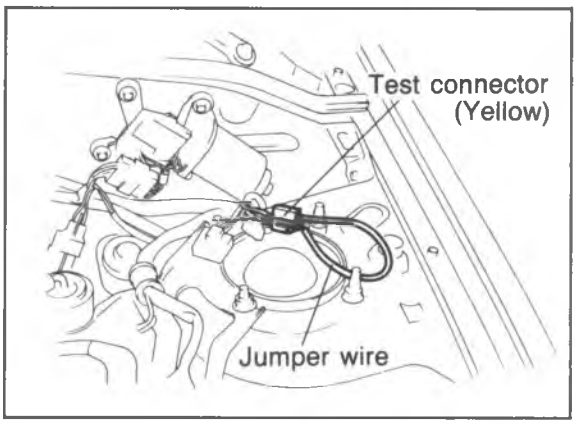

86U04A-081

Volume Test

Warning
Before performing following procedures, release the fuel pressure to reduce the possibility of injury or fire. (Refer to page 4A—46)

1. Connect a jumper wire to test connector (Yellow).
2. Disconnect the fuel return hose from fuel return pipe.

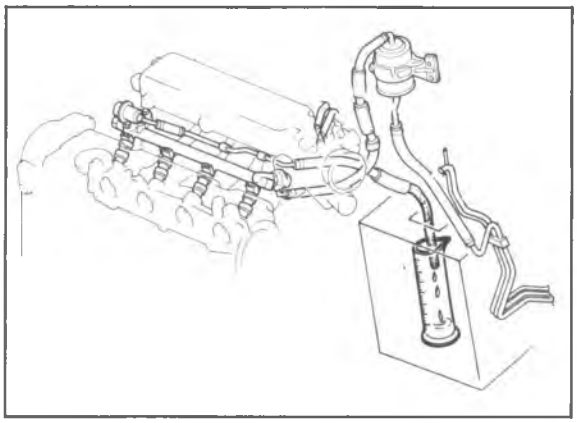
86U04A-082

3. Turn the ignition switch ON for 10 seconds, and check the feeding capacity with graduated cylinder.

   Feeding capacity:
   220 cc (13.4 cu in)/10 sec. min.

4. If not within specification, check the fuel filter, and fuel line.
5. Turn the ignition switch OFF and disconnect the jumper wire.

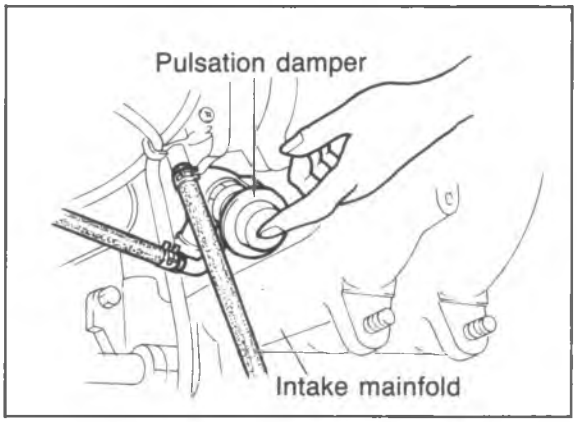

86U04A-083

PULSATION DAMPER

1. Run the engine at idle.
2. Place a finger on the screw of the pulsation damper head.
3. Check that pulsation is felt.

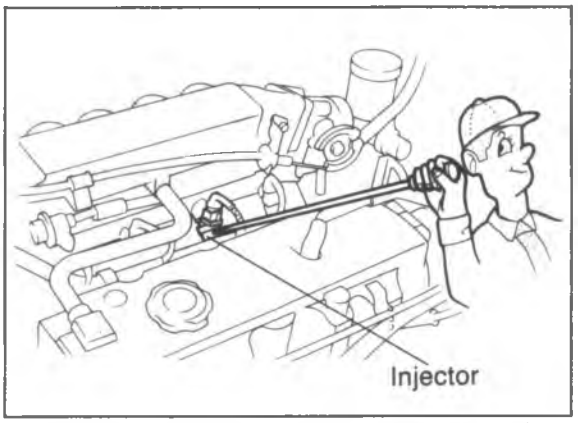

86U04A-084

INJECTOR

On-vehicle Inspection

Engine does not start

Perform "Quick Inspection for Electrical Signal" below.

Engine runs

1. Warm up the engine and run it at idle.
2. Listen for operational sound of the injector with a screwdriver or a sound scope.

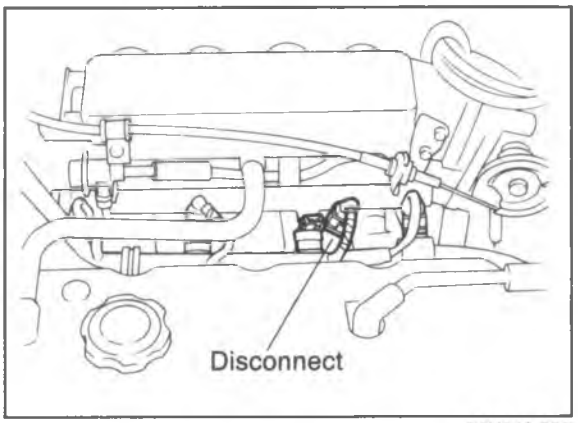

86U04A-085

3. Disconnect the connector from each injector respectively.
4. Check that the engine speed decreases about **100—200 rpm** each time.
5. If not correct, check the following:

No operating sound and no speed drop
Perform "Quick Inspection for Electrical Signal" below.
No speed drop only
Injector resistance
Injection volume of injector

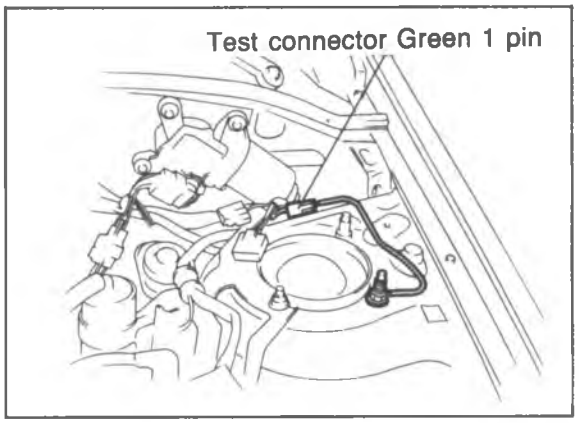

86U04A-086

Quick Inspection for Electrical Signal

1. Ground the test connector (Green, 1-pin) with a jumper wire.

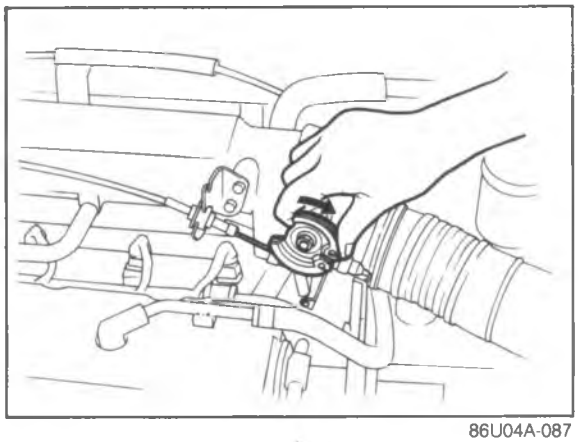

86U04A-087

2. Turn the ignition switch ON.
3. Open the throttle valve and check for a "click" at the injector with a screwdriver or sound scope as it is opened.
4. If nothing is heard, check the injector wiring circuit.
5. If nothing is heard at all injectors, check the main relay (Refer to page 4A—87) and circuit.

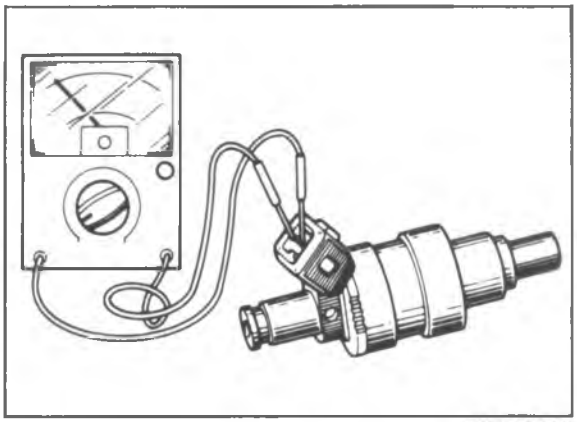

86U04A-088

Inspection
There are 3 inspections which must be performed for the injectors.

Resistance
1. Remove the injectors from the engine. (Refer to page 4A—59.)
2. Check the resistance of each injector with an ohmmeter.
3. If not correct, replace the injector.

Resistance: 12—16 Ω

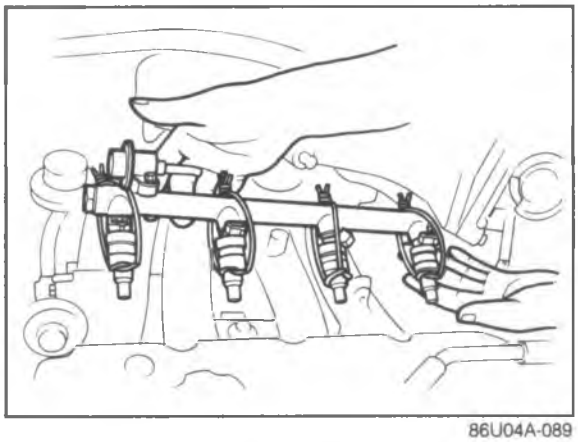

86U04A-089

Fuel leakage test and volume test
1. Lift the dynamic chamber upward.
2. Remove the injectors and delivery pipe. (Refer to pages 4A—59 and 61.)
3. Affix the injectors to the delivery pipe with wire.

Caution
Affix the injectors firmly to the delivery pipe so that no movement of the injectors is possible.

Warning
Be extremely careful when working with fuel. Always work away from sparks or open flames.

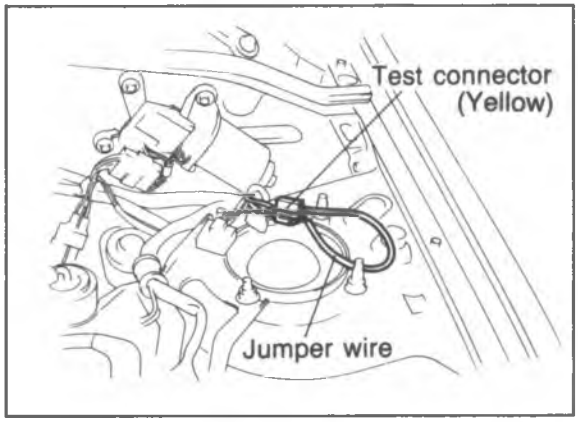

86U04A-090

4. Connect the terminals of the fuel pump test connector with a jumper wire. Turn the ignition switch ON.
5. Check that no fuel leaks from the injector nozzles.

Note
After 1 minute a drop of fuel from the injector is acceptable.

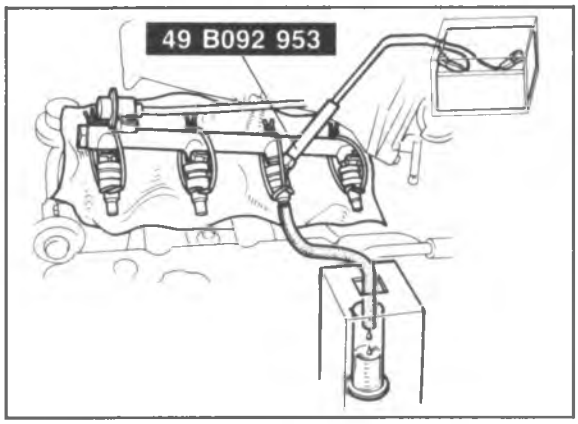

86U04A-091

6. Connect the **SST** to the battery and injector.
7. Check the injection volume with a graduated container.

Injection volume:
Approx. 44—61 cc (2.68—3.72 cu in) /15 sec.

Caution
When using the SST, make sure of the SST number and use correct one.

8. If not correct, replace the injectors.

PRESSURE REGULATOR CONTROL SYSTEM

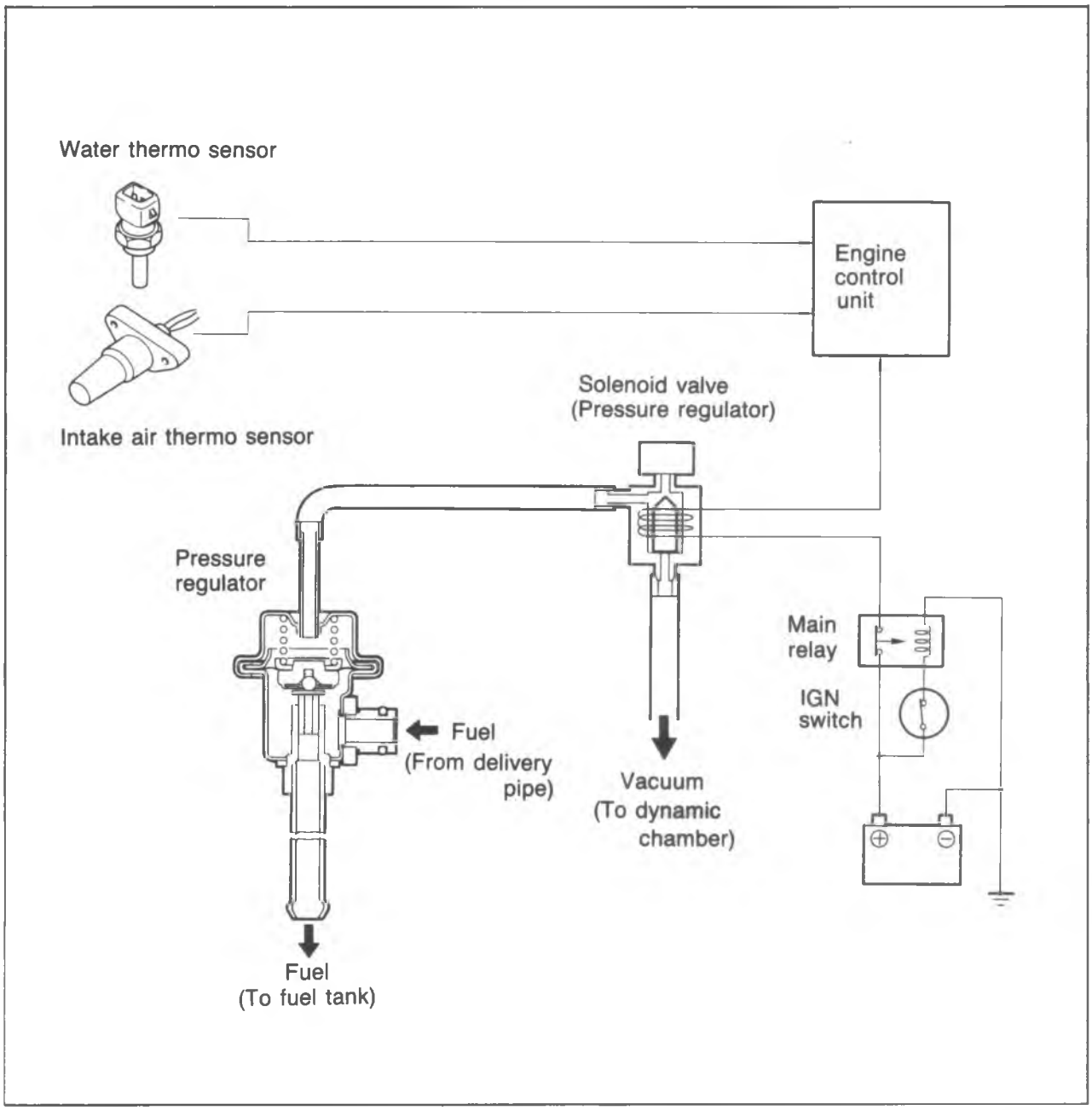

86U04A-092

To prevent percolation of the fuel during idle after the engine is restarted, vacuum is cut to the pressure regulator, increasing the fuel pressure.

Specified time: Approx. 120 sec.
Operating condition: Coolant temperature — above 70°C (158°F)
Intake air temperature — above 20°C (68°F)

COMPONENT DESCRIPTIONS

Component	Function	Remarks	Application	
			New model	Previous model
Engine control unit	Detects signals from input sensors and switches; controls solenoid valve (Pressure regulator control)		○	○
Ignition coil (–) terminal	Detects engine speed; sends signal to control unit		○	○
Ignition switch (ST position)	Sends engine cranking signal to control unit		○	○
Intake air thermo sensor	Detects intake air temperature; sends signal to control unit	Installed in air flow meter	○	○
Pressure regulator	Adjusts fuel pressure supplied to injectors		○	○
Solenoid valve (Pressure regulator control)	Controls vacuum line to pressure regulator	Closes vacuum line when hot	○	○
Throttle sensor	Detects throttle valve opening angle; sends signal to control unit	Installed on throttle body	○	○
Water thermo sensor	Detects coolant temperature; sends signal to control unit		○	○

86U04A-093

Operating time	Fuel line pressure kPa (kg/cm², psi)
After starting: for 120 sec.	235—275 (2.4—2.8, 34—40)
After 120 sec.	186—226 (1.9—2.3, 27—33)

86U04A-097

7. Restart the engine.
8. Check the fuel line pressure and operating times as shown in the chart.

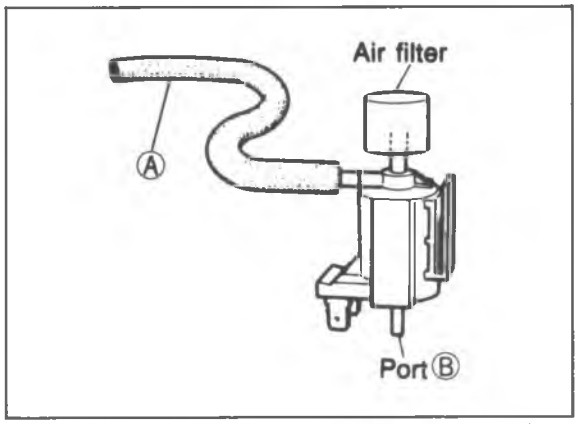

86U04A-098

Solenoid Valve (Pressure Regulator Control) Inspection

1. Disconnect the vacuum hose from the solenoid valve and vacuum pipe.
2. Blow through the solenoid valve from vacuum hose A.
3. Check that air flows from port B.

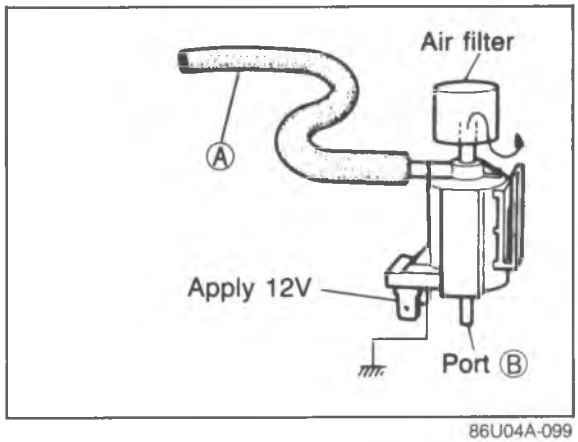

86U04A-099

4. Disconnect the solenoid valve connector.
5. Connect 12V and a ground to the terminals of the solenoid valve.
6. Blow through the solenoid valve from the vacuum hose A.
7. Check that air flows from the valve air filter.

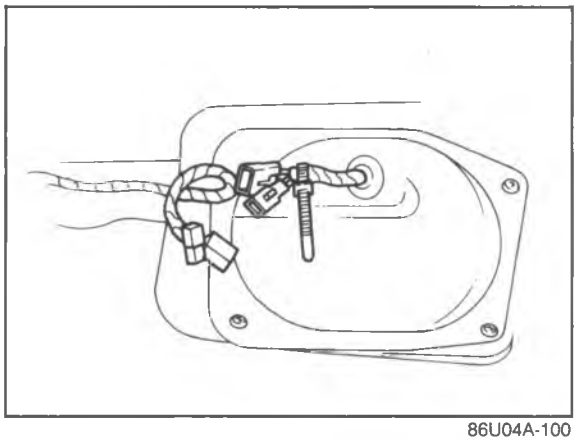

86U04A-100

REPLACEMENT

Caution

A) Before performing the following procedure, release the fuel pressure from the fuel system to reduce the possibility of injury or fire (Refer to page 4A—46).

b) When servicing the fuel system, keep sparks, cigarettes, and open flames away from the fuel.

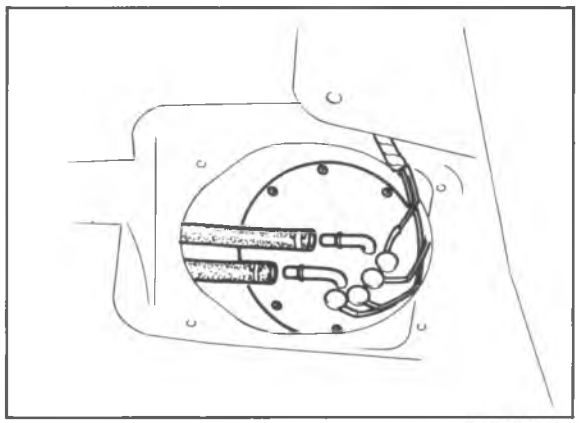

86U04A-101

Fuel Pump

1. Remove the rear seat and disconnect the fuel pump connector.
2. Remove the service hole cover.
3. Disconnect the fuel hoses.
4. Remove the fuel pump and fuel tank gauge assembly.

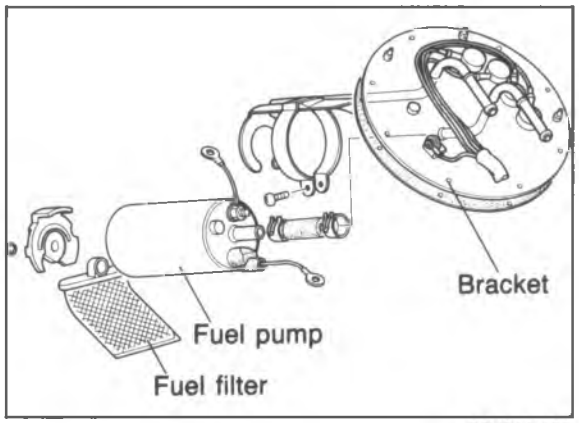

86U04A-102

5. Replace the fuel pump.

Caution

Secure the fuel pump terminals and fuel hoses securely.

6. Install in the reverse order of removal.

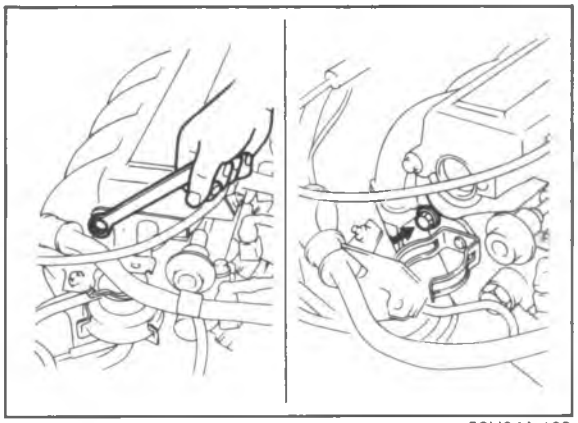

86U04A-103

Injector

1. Remove the wiring harness bracket.
2. Remove the EGR modulator valve bracket.
3. Disconnect the vacuum pipe mounting bolts.

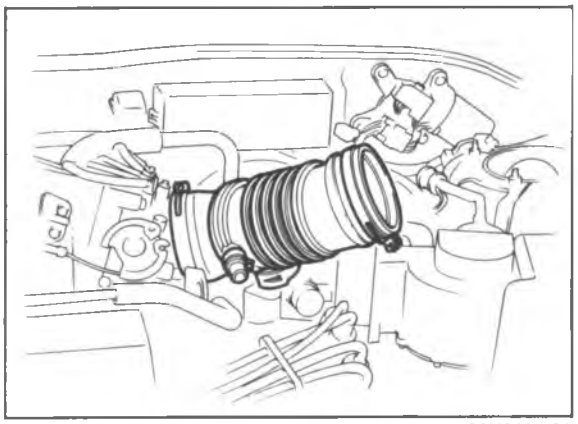

86U04A-104

4. Disconnect the air hose from the throttle body.

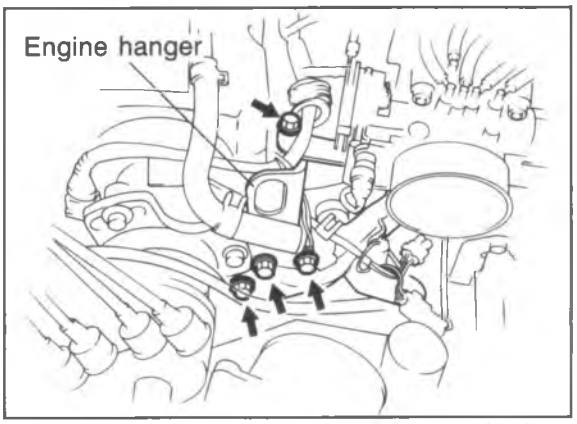

86U04A-105

5. Remove the engine hanger.
6. Remove the dynamic chamber mounting bolts and nuts.

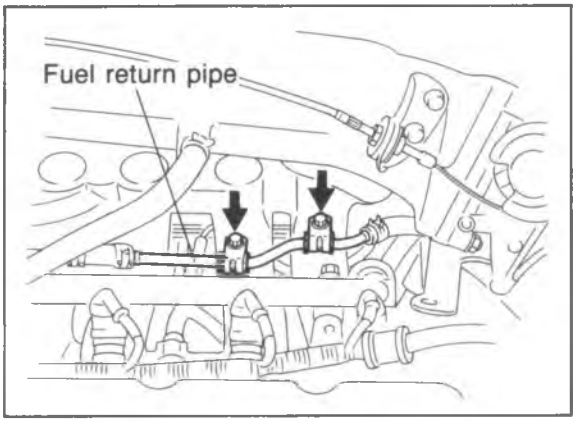

86U04A-106

7. Lift the dynamic chamber.
8. Disconnect the fuel return pipe bracket from the intake manifold.
9. Disconnect the injector connectors.
10. Remove the delivery pipe along with the pressure regulator and pulsation damper.

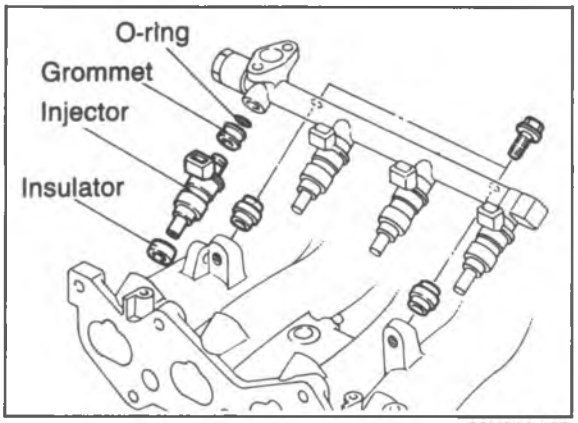

86U04A-107

11. Remove the grommets, injectors, and insulators.
12. Install in the reverse order of removal, referring to installation note.

Tightening torque:

Delivery pipe	**19—25 N·m**
Dynamic chamber	**(1.9—2.6 m-kg,**
Engine hanger	**14—19 ft-lb)**

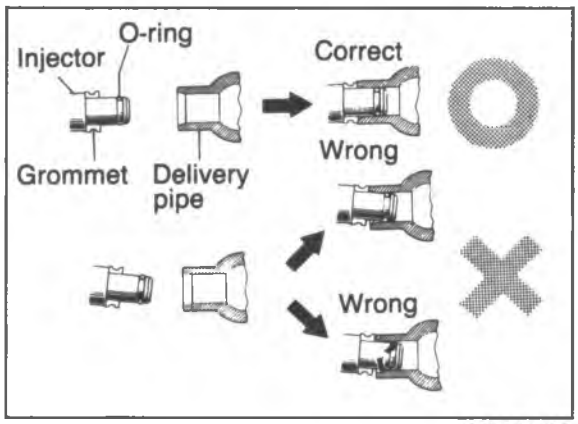

86U04A-108

Installation note
Injector

1. Use new O-rings.
2. Apply a small amount of engine oil to the O-rings when installing.

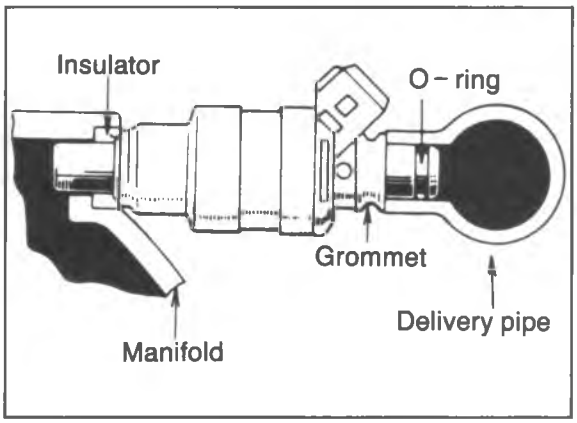

86U04A-109

3. Install the injectors and the injector insulators.

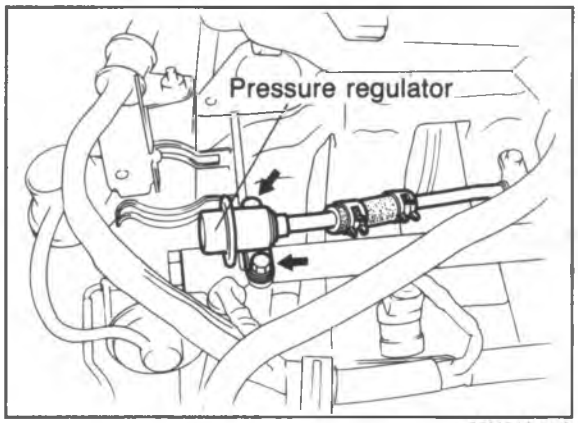

86U04A-110

Delivery Pipe

1. Perform steps 1 to 7 of removal procedure for injectors. (Refer to page 4A—59.)
2. Remove the pulsation damper, pressure regulator, and injectors.

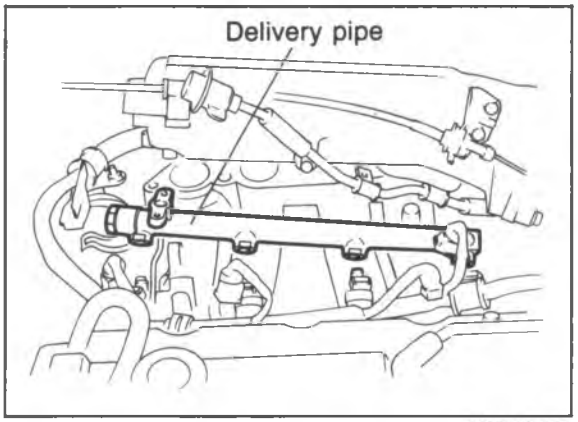

86U04A-111

3. Replace the delivery pipe.
4. Install in the reverse order of removal, referring to installation note.

Tightening torque:

Pressure regulator	**8—11 N·m (0.8—1.1 m-kg, 69—95 in-lb)**
Delivery pipe	**19—25 N·m (1.9—2.6 m-kg, 14—19 ft-lb)**
Engine hanger	
Dynamic chamber	

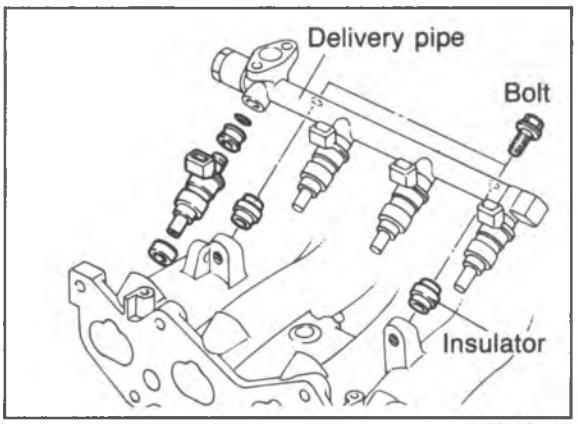

86U04A-112

Installation note

Insulator

Install the insulators between the intake manifold and delivery pipe.

Injector

Refer to page 4A—60.

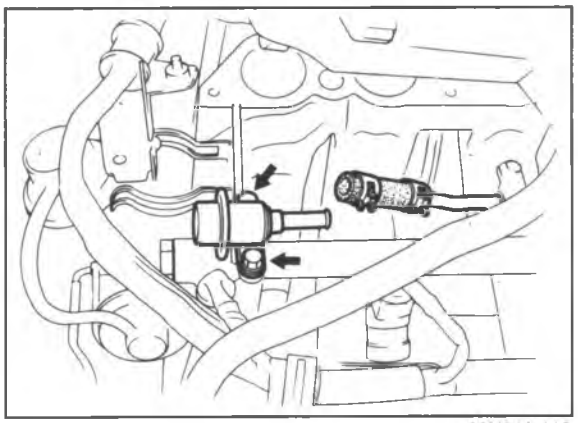

86U04A-113

Pressure Regulator

1. Perform steps 1 to 8 of removal procedure for the injector. (Refer to page 4A—59.)
2. Disconnect the vacuum hose and fuel return hose.
3. Remove the pressure regulator.
4. Install in the reverse order of removal.

Tightening torque:
8—11 N·m (0.8—1.1 m-kg, 69—95 in-lb)

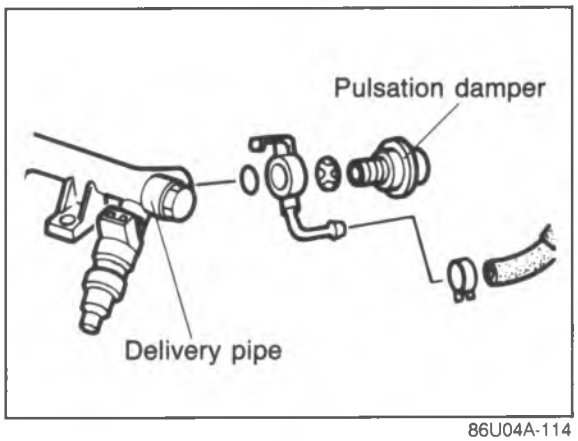

86U04A-114

Pulsation Damper

1. Perform steps 1 to 7 of removal procedure for the injectors. (Refer to page 4A—59.)
2. Remove the pulsation damper.
3. Install in the reverse order of removal.

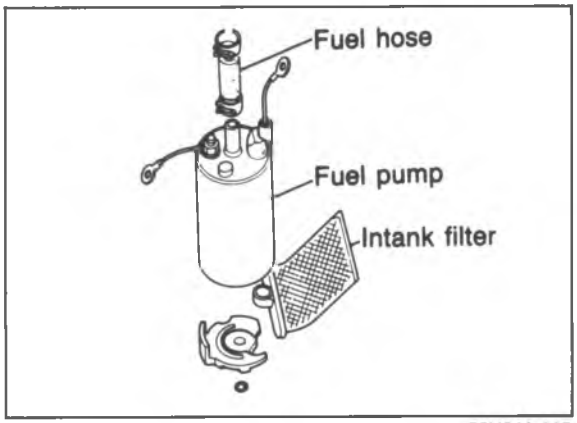

86U04A-115

Fuel Filter

Low pressure side

Refer to page 4A—58.

High pressure side

The fuel filter must be replaced at the intervals outlined in the maintenance schedule.

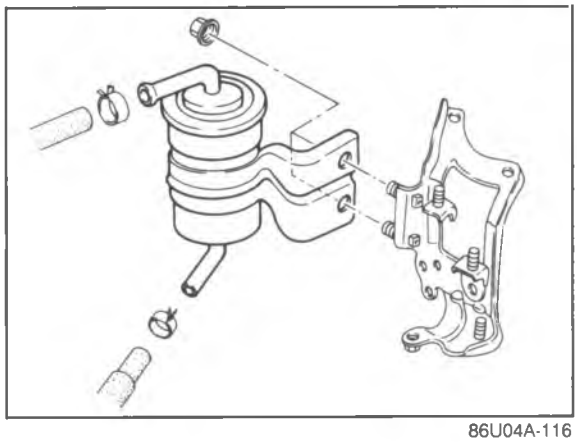

86U04A-116

Warning
Always work away from sparks or open flames.

1. Disconnect the fuel hoses from the fuel filter.
2. Remove the fuel filter and the bracket.
3. Install a new filter and the bracket.
4. Connect the fuel hoses.

Note
When installing the filter, push the fuel hoses fully onto the fuel filter and secure the hoses with spring clamps.

FUEL TANK
Removal

Caution

a) Before performing the following procedure, release the fuel pressure from the fuel system to reduce the possibility of injury or fire. (Refer to page 4A—46)

b) When removing the fuel tank, keep sparks, cigarettes, and open flames away from the fuel tank.

Remove in the sequence shown in the figure.

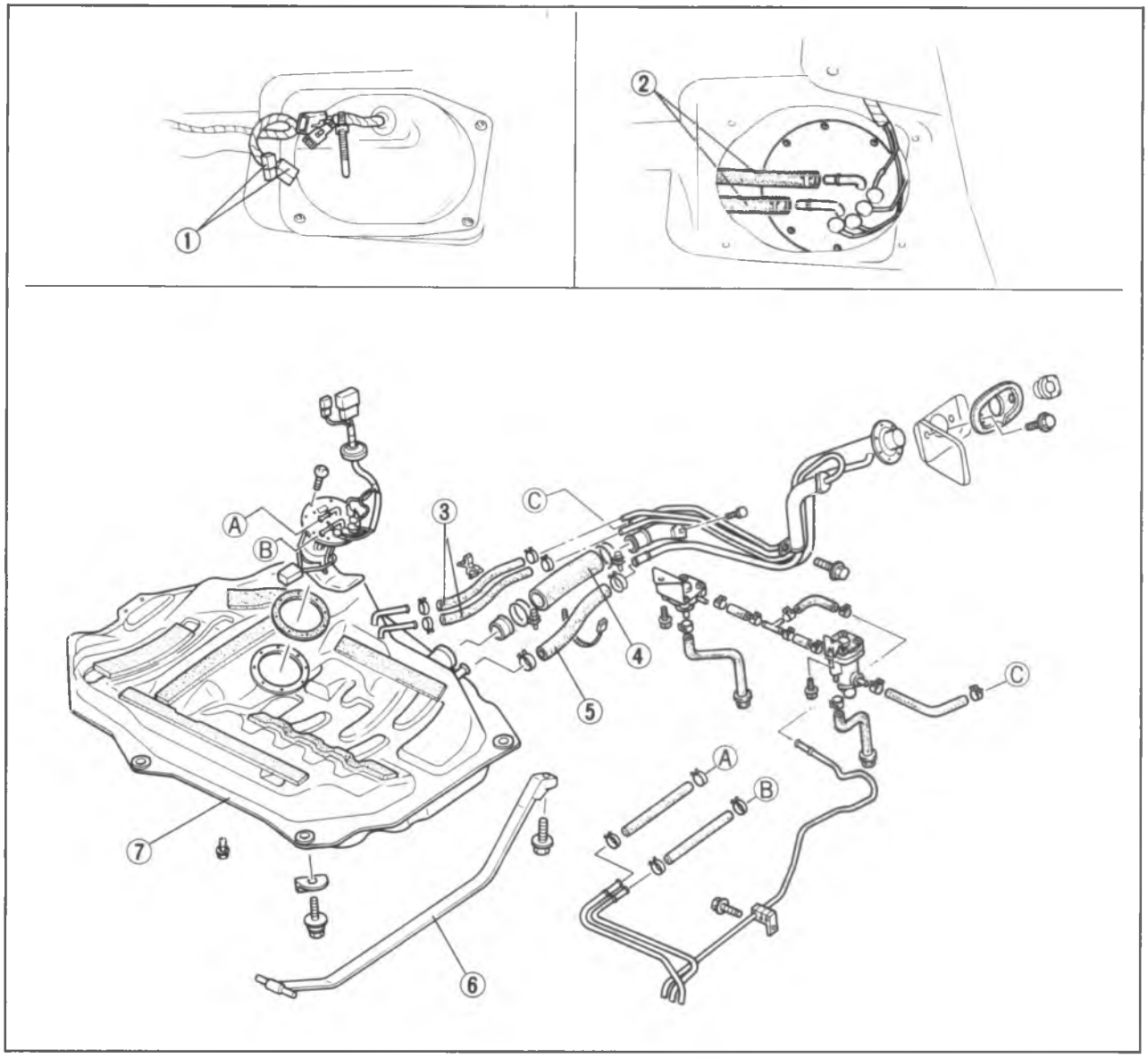

86U04A-117

Note

Drain the fuel from the fuel tank before removing the tank.

1. Fuel pump connectors
2. Fuel hoses
3. Evaporative hoses
4. Fuel filler hose
5. Breather hose
6. Fuel tank strap
7. Fuel tank

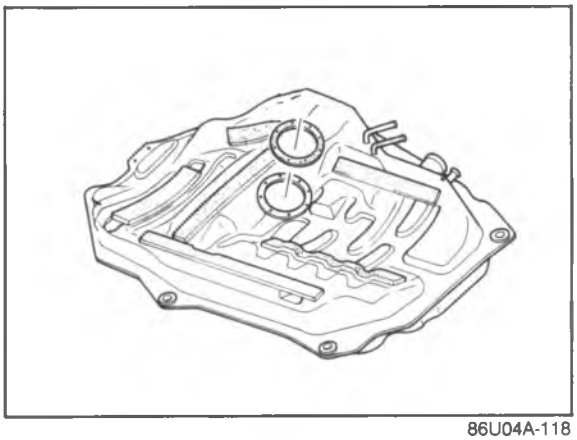

86U04A-118

Inspection

1. Check the fuel tank for cracks and corrosion.
2. If any defect is found, repair or replace the tank.

Warning

Before repairing, clean the fuel tank thoroughly with steam to sufficiently remove all explosive gas.

Installation

Install in the reverse order of removal, referring to the installation note.

Torque Specifications

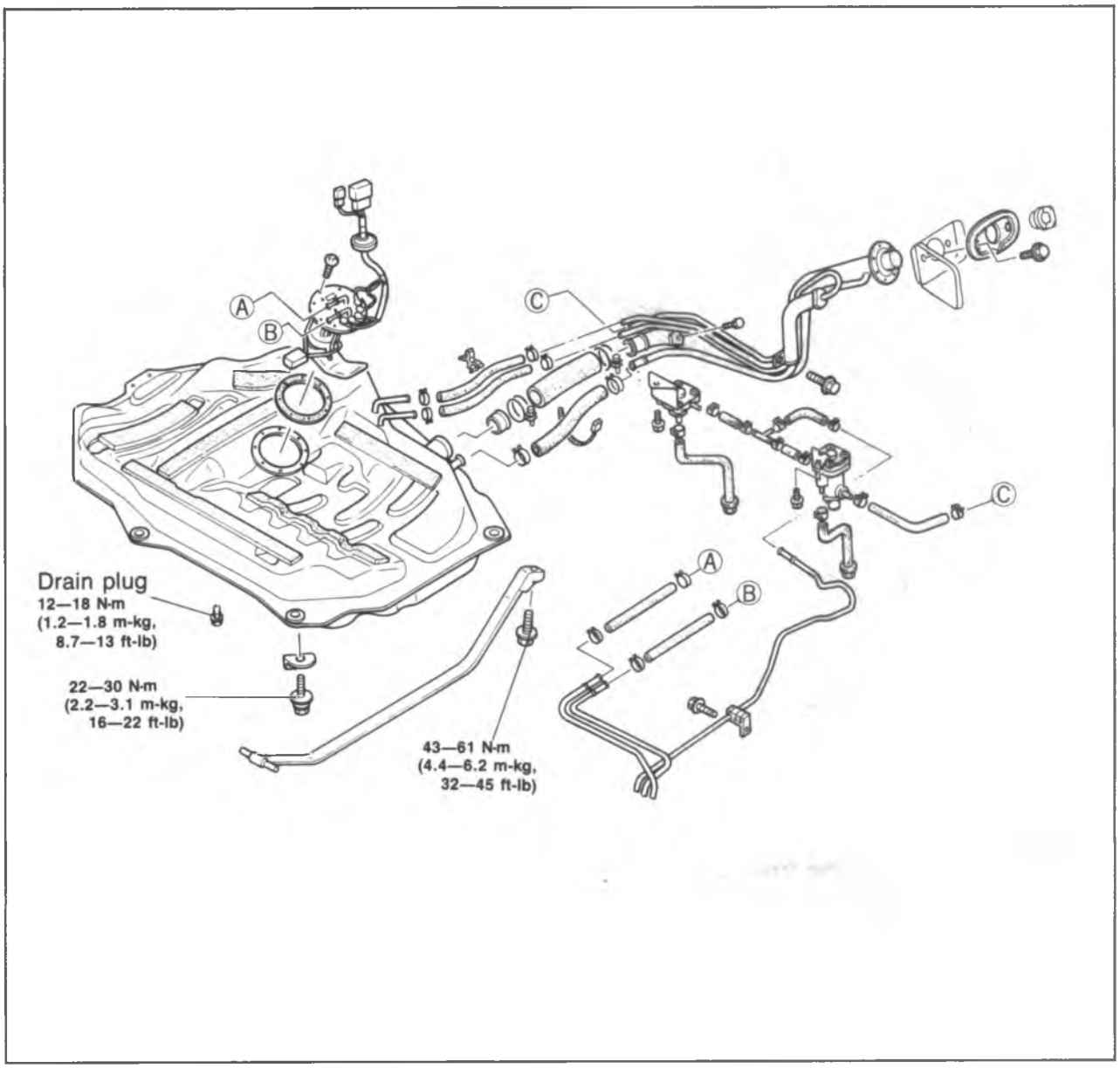

86U04A-119

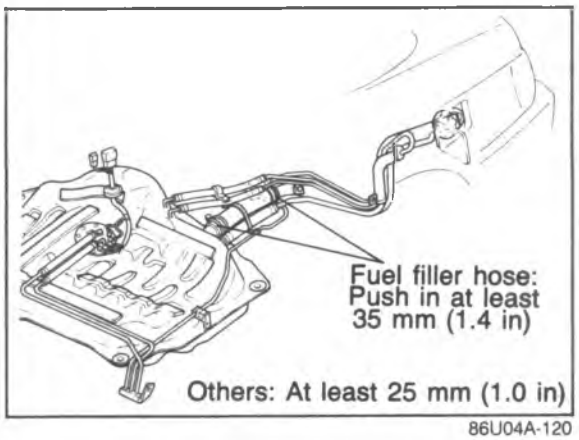

86U04A-120

Installation note

1. Push the hose ends of the main fuel hose, fuel return hose and evaporation hoses onto the fuel tank fittings **at least 25 mm (1.0 in)**.
2. Push the fuel filler hose ends onto the fuel tank pipe and filler pipe **at least 35 mm (1.4 in)**.

DECELERATION CONTROL SYSTEM

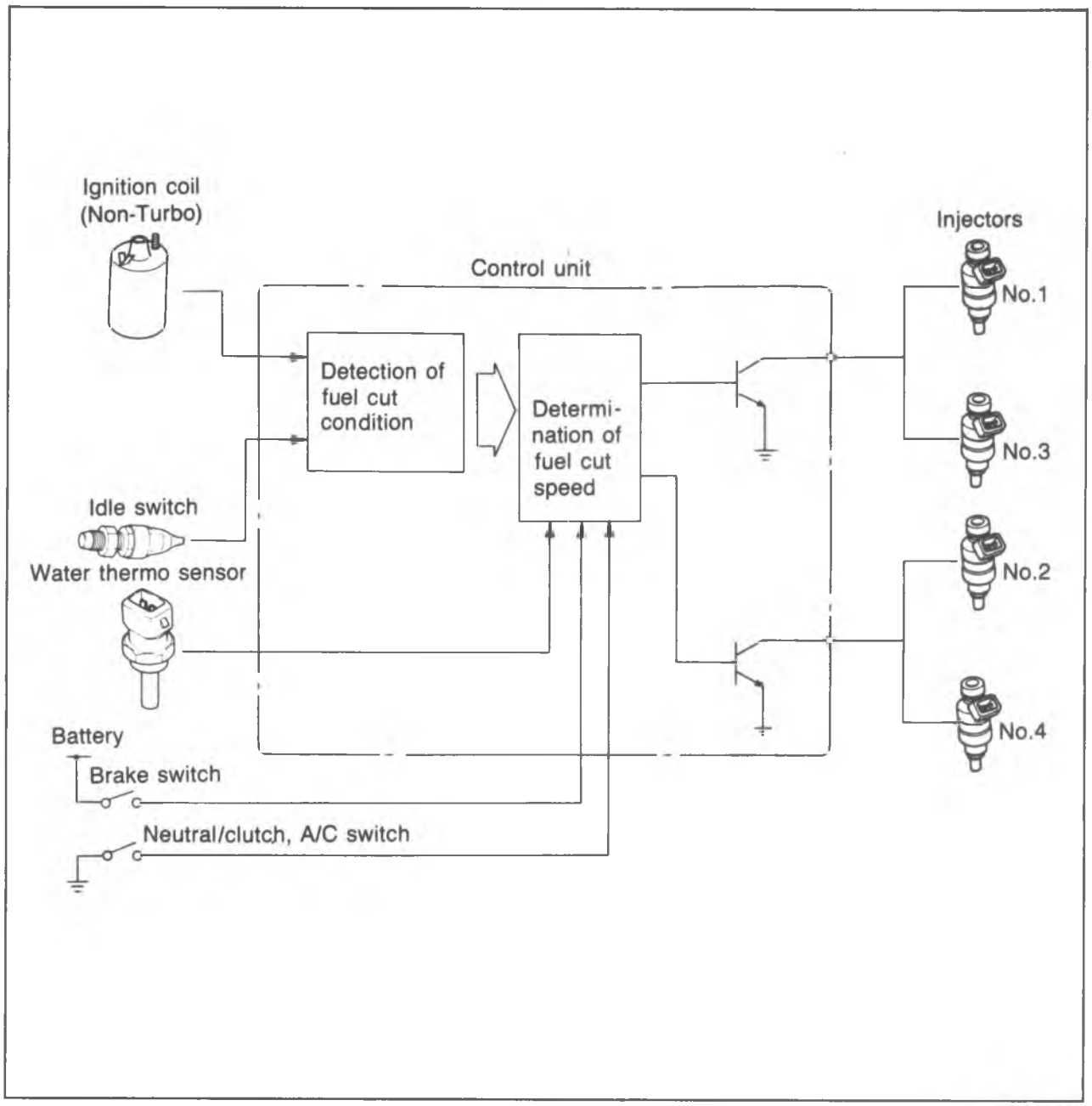

86U04A-121

The fuel cut system is provided as a deceleration control system.
This system is to improve fuel economy.

COMPONENT DESCRIPTIONS

Component	Function	Remarks	Application	
			New model	Previous model
Brake light switch	Detects braking operation (deceleration); sends signal to control unit		○	○
Clutch switch	Detects in-gear condition; sends signal to control unit	Switch ON when clutch pedal released	○	○
EC-AT control unit	Detects N or P range; sends signal to control unit		○	X
Engine control unit	Detects signals from input sensors and switches; cuts fuel injection		○	○
Idle switch	Detects when throttle valve fully closed; sends signal to control unit	Installed on throttle body	○	○
Ignition coil (–) terminal	Detects engine speed; sends signal to control unit		○	○
Inhibitor switch	Detects in-gear condition; sends signal to EC-AT control unit	Switch ON in "N" or "P" range	○	○
Neutral switch	Detects in-gear condition; sends signal to control unit	Switch ON when in-gear	○	○
Water thermo sensor	Detects coolant temperature; sends signal to control unit		○	○

86U04A-122

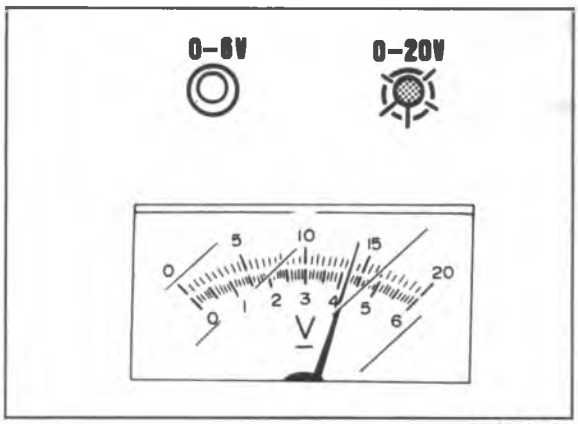

86U04A-126

4. Increase the engine speed to **4,000 rpm**, then suddenly decrease the engine speed.
5. Check that the red indicator lamp stays illuminated during deceleration.

EXHAUST GAS RECIRCULATION (EGR) SYSTEM

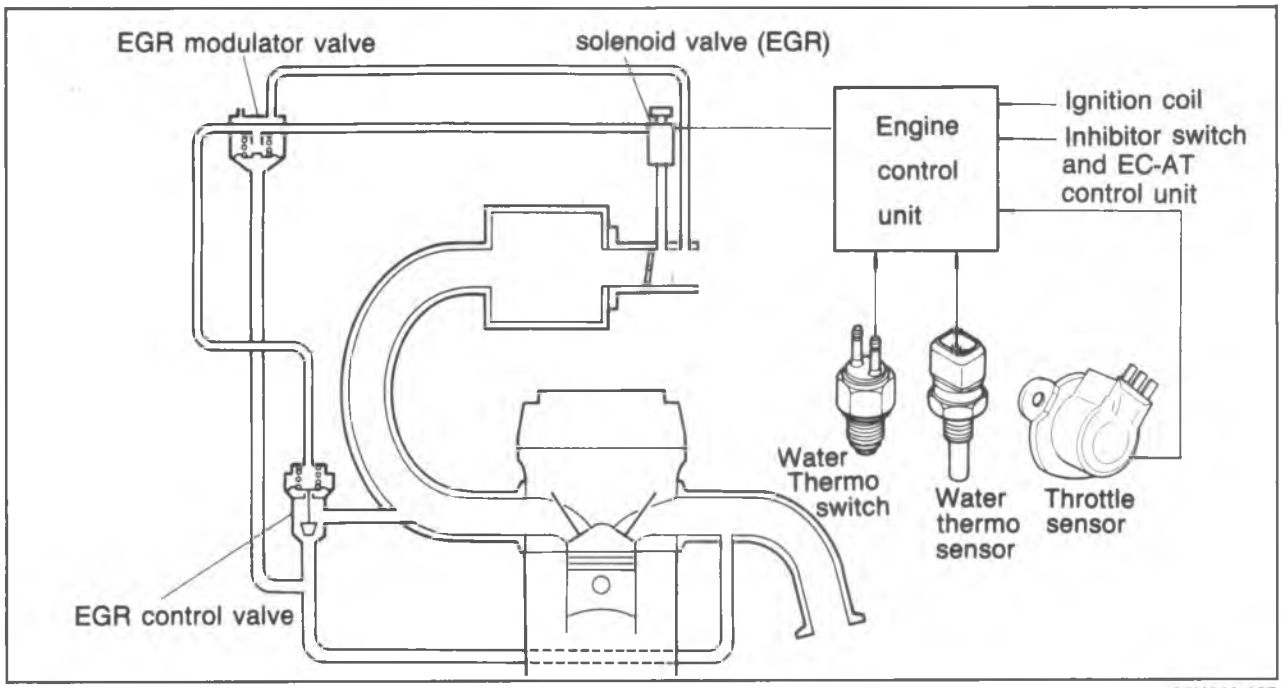

86U04A-127

This system introduces exhaust gas into the intake manifold to reduce NOx in the exhaust gas. It operates depending on the engine load, engine speed **(above 1,500 rpm)**, engine coolant temperature **(above 70°C, 158°F)**, and radiator coolant temperature **(above 17°C, 63°F)**.

COMPONENT DESCRIPTIONS

Component	Function	Remarks	Application	
			New model	Previous model
EGR control valve	Recirculates portion of exhaust gas		○	○
EGR modulator valve	Controls vacuum acting on EGR control valve		○	○
Engine control unit	Detects signals from input sensors and switches; controls solenoid valve (EGR)		○	○
Ignition coil (–) terminal	Detects engine speed; sends signal to control unit		○	○
Solenoid valve (EGR)	Controls vacuum line to EGR control valve		○	○
Throttle sensor	Detects throttle valve opening angle; sends signal to control unit	Installed on throttle body	○	○
Water thermo sensor	Detects coolant temperature; sends signal to control unit		○	○
Water thermo switch	Detects radiator coolant temperature; sends signal to control unit	ON: above 17°C (63°F)	○	○

86U04A-128

TROUBLESHOOTING

Check the condition of the wiring harness and connectors before checking the sensors or switches.

Note
Make the system inspection first. If no problem is found, continue with the next system inspection of the Troubleshooting Guide. (Refer to pages 4A—8 and 9.)

Possible cause	Solenoid valve (EGR)	EGR modulator valve	EGR control valve	Water thermo sensor	Water thermo switch	Engine control unit terminal		System inspection
						1H	2N	
Page	**4A—71**	**4A—72**	**4A—72**	**4A—101**	**4A—101**	**4A—90**	**4A—92**	**4A—71**
Checking order	3	2	4	6	5	7	8	1

86U04A-129

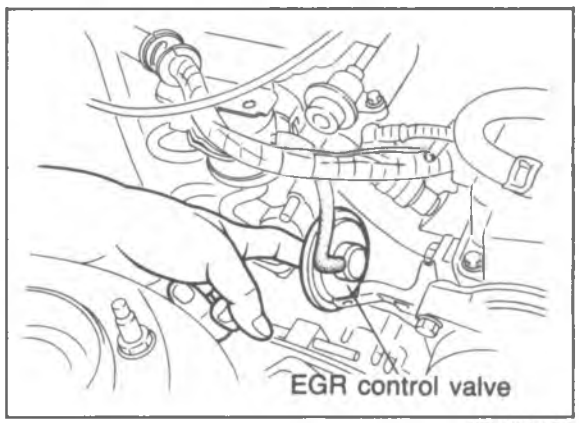

86U04A-130

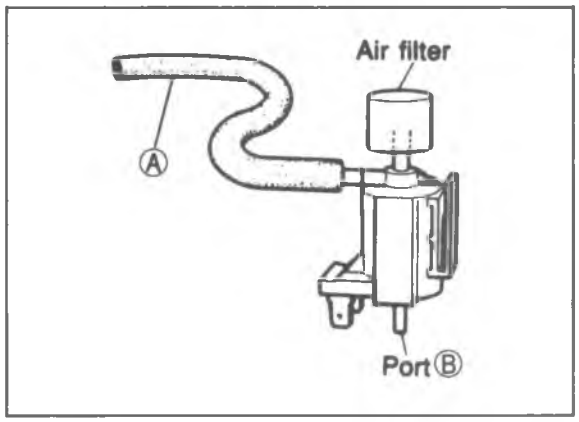

86U04A-131

System Inspection

1. Start the engine.
2. Accelerate the engine and verify that the diaphragm of the EGR control valve does not move while the engine is still cold.
3. Warm up the engine to normal operating temperature and run it at idle.

Warning
Be careful when checking the EGR control valve because the surrounding area is very hot.

4. Accelerate the engine and check that the diaphragm of the EGR control valve moves upward.

Solenoid Valve (EGR)

1. Disconnect the vacuum hose from the solenoid valve and vacuum pipe.
2. Blow through the solenoid valve from vacuum hose A.
3. Check that air flows from port B.

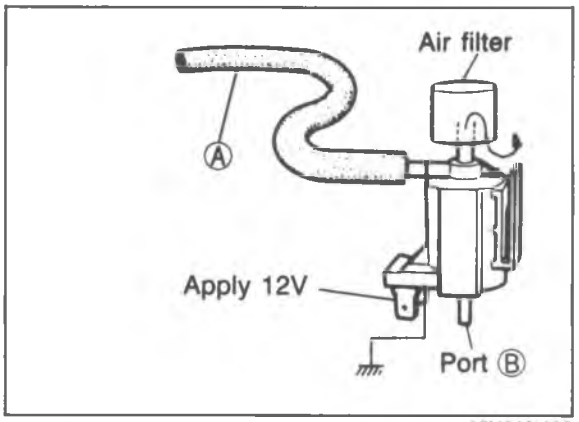

86U04A-132

4. Disconnect the solenoid valve connector.
5. Connect 12V and a ground to the terminals of the solenoid valve.
6. Blow through the solenoid valve from vacuum hose A.
7. Check that air flows from the valve air filter.

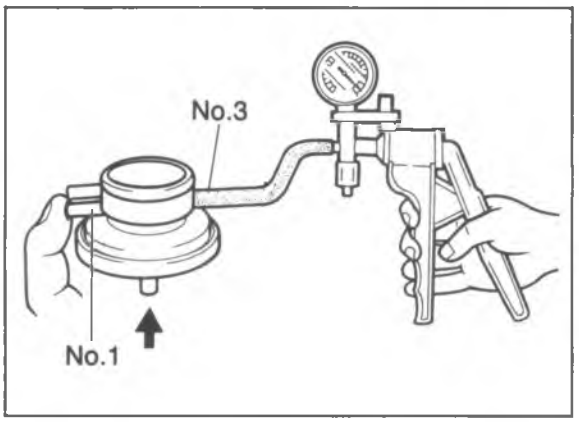

86U04A-133

EGR Modulator Valve

1. Remove the EGR modulator valve.
2. Plug the No. 1 port and connect a vacuum pump to the No. 3 port.
3. Blow into the exhaust gas port. Operate the vacuum pump and verify that vacuum is held.
4. Release the exhaust gas port and confirm that vacuum is released.

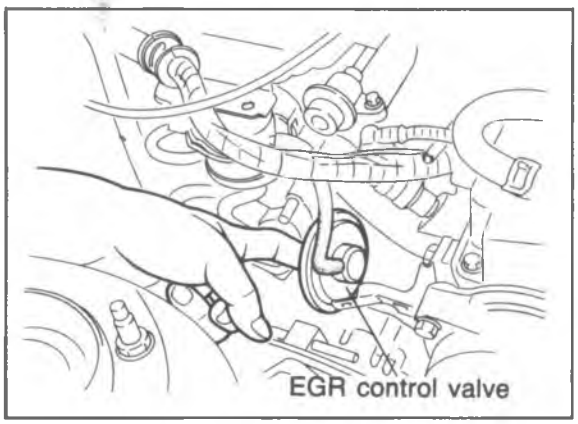

86U04A-134

EGR Control Valve

1. Manually actuate the valve by pushing on the diaphragm with finger.
2. Check that the spring resistance is present and the diaphragm moves freely with no sticking or binding.

Note
Before replacing the EGR control valve, check the intake air and control systems.

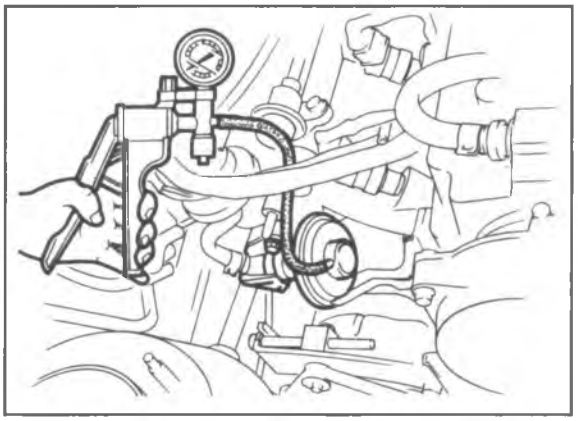

86U04A-135

3. Warm up the engine and run it at idle.
4. Connect a vacuum pump to the valve and apply vacuum.
5. Check that the engine runs roughly or stalls at more than the specified vacuum.

Specification:
40—60 mmHg (1.6—2.4 inHg)

6. If not correct, replace the EGR control valve.

EVAPORATIVE EMISSION CONTROL (EEC) SYSTEM

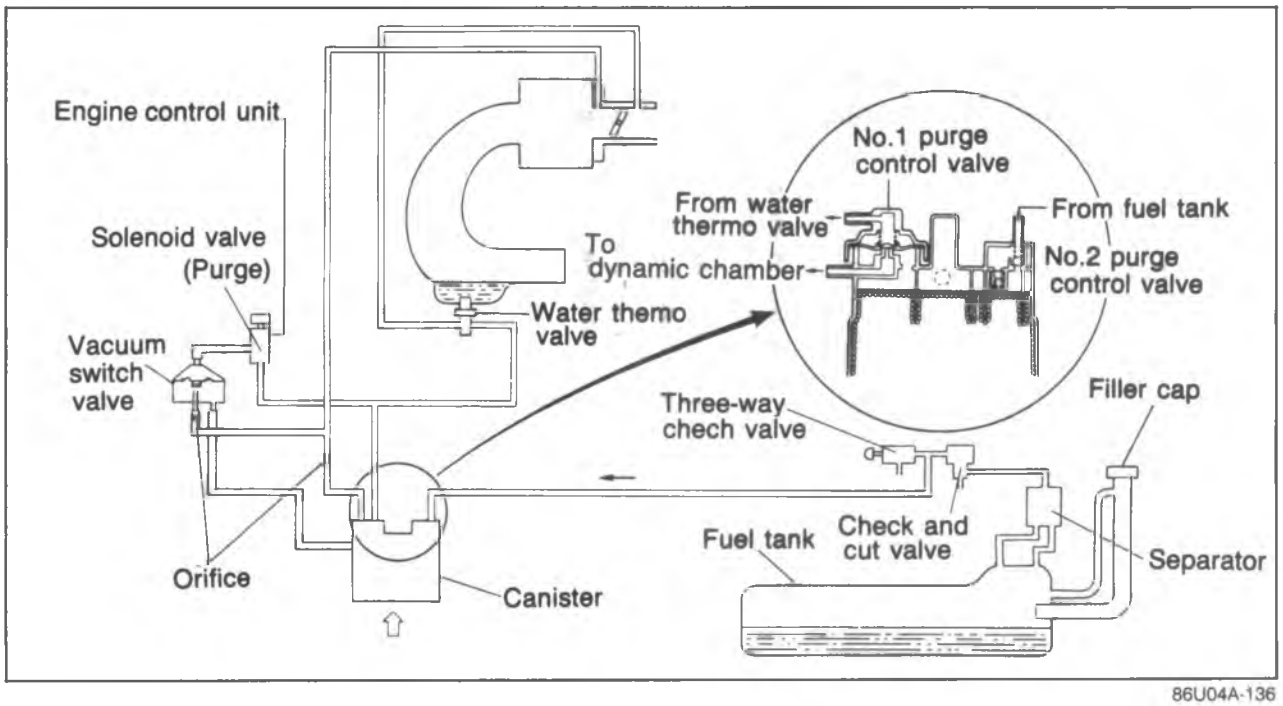

86U04A-136

This system stores fuel vapor generated in the fuel tank in the canister when the engine is not running. The fuel vapor is stored in the canister until it is drawn into the dynamic chamber and burned when the engine is started.

COMPONENT DESCRIPTIONS

Component	Function	Remarks	Application	
			New model	Previous model
Air flow meter	Detects amount of intake air; sends signal to control unit	Intake air temp sensor and fuel pump switch are integrated	○	○
Charcoal canister	Stores gas tank fumes when engine stopped		○	○
Check and cut valve	Releases excessive pressure or vacuum in fuel tank to atmosphere		○	X
Engine control unit	Detects signals from input sensors and switches; controls solenoid valve (Purge control)		○	○
Ignition coil (–) terminal	Detects engine speed; sends signal to control unit		○	○
Separator	Prevents fuel from flowing into charcoal canister		○	X
Solenoid valve (Purge control)	Controls vacuum line to vacuum switch valve		○	○
Three-way check valve	Controls pressure in fuel tank		○	○
Vacuum switch valve	Regulates evaporative fumes from canister to intake manifold		○	○
Water thermo sensor	Detects coolant temperature; sends signal to control unit		○	○
Water thermo valve	Controls vacuum applied to No.1 purge control valve and solenoid valve (Purge)	Opens vacuum line above 54°C (129°F)	○	○

86U04A-137

TROUBLESHOOTING

Check the condition of the wiring harness or connectors, before checking the sensors or switches.

Note

Make the system inspection first. If no problem is found, continue with the next system inspection of the Troubleshooting Guide. (Refer to pages 4A—8 and 9.)

Possible cause	Vacuum switch valve	Solenoid valve (Purge control)	Three-way check valve	Check and cut valve	Separator	No.1 purge valve	No.2 purge valve	Water thermo valve	Water thermo sensor	Engine control unit terminal 2P	System inspection
Page	4A—76	4A—77	4A—77	4A—78	4A—78	4A—76	4A—76	4A—77	4A—101	4A—92	4A—75
Checking order	3	2	9	10	11	4	5	6	7	8	1

86U04A-138

86U04A-139

System Inspection

1. Check the vacuum hose routing.
2. If there is a poor connection, clog, or leak, repair or replace as necessary.
3. Warm up the engine and run it at idle.
4. Disconnect vacuum hose A from No. 1 purge control valve and connect the **SST** to the hose.

86U04A-140

5. Increase the engine speed to above **2,500 rpm** and verify that the gauge shows more than **150 mmHg (5.9 inHg)**.
6. If not correct, check the water thermo valve.
7. Reconnect hose A to No. 1 purge control valve.

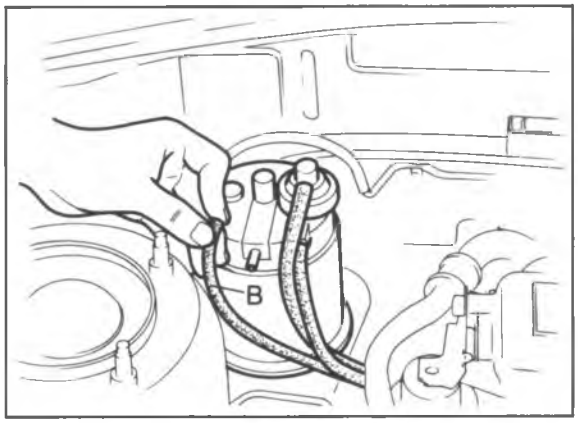

86U04A-141

8. Disconnect vacuum hose B from the canister and place a finger over the end of the hose.
9. Accelerate the engine rapidly and check that vacuum is felt at **above 1,500 rpm**.
10. Reconnect hose B to the canister.

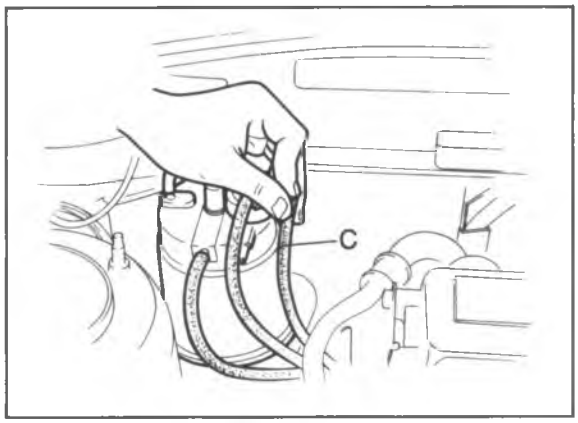

86U04A-142

11. Disconnect vacuum hose C from the canister and place a finger over the end of the hose.
12. Check that vacuum is felt.
13. If not correct, check the vacuum line between the canister and the dynamic chamber for clogging.

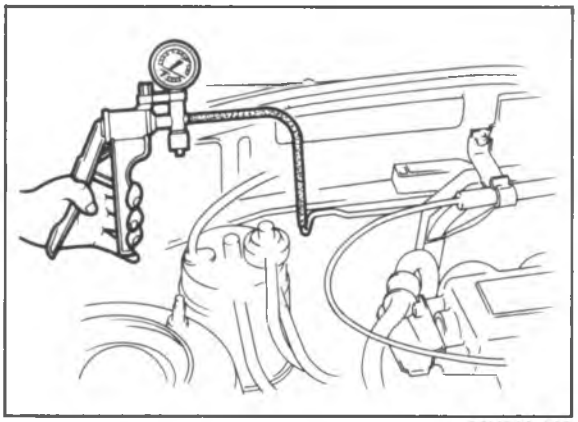

86U04A-143

14. Disconnect the evaporation hose from the evaporation pipe.
15. Connect the vacuum pump to the evaporation pipe.
16. Operate the vacuum pump and verify that no vacuum is held.
17. If vacuum is held, check the evaporation pipe for clogging.

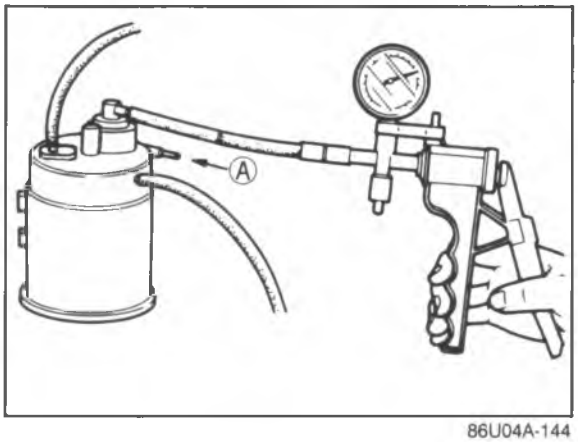

86U04A-144

No. 1 Purge Control Valve

1. Blow through the purge control valve from port A and check that air does not flow.
2. Connect a vacuum pump to the purge control valve.
3. Apply **110 mmHg (4.33 inHg)** vacuum, and blow through port A again; air should flow.

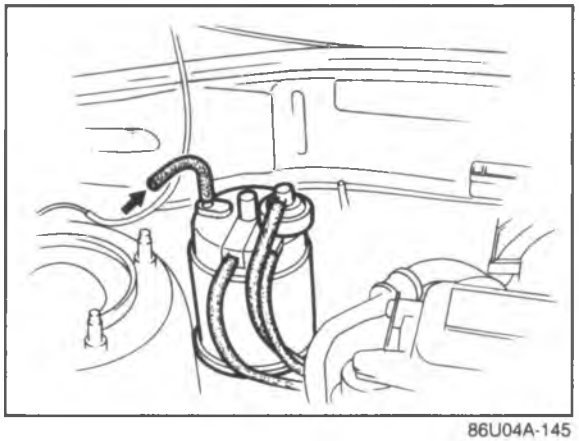

86U04A-145

No. 2 Purge Control Valve

1. Disconnect vacuum hose B from the evaporation pipe.
2. Blow through the hose and verify that air flows freely.

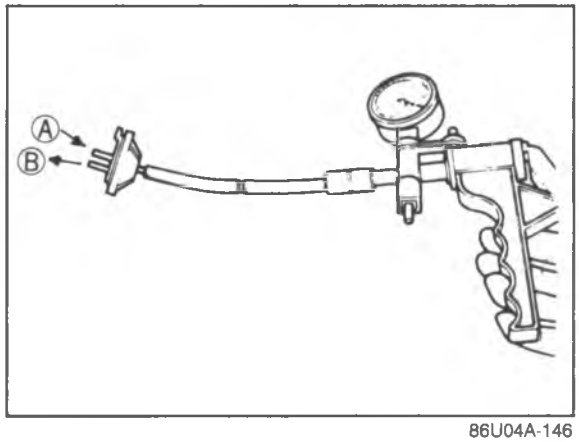

86U04A-146

Vacuum Switch Valve

1. Remove vacuum switch valve.
2. Connect a vacuum pump to the valve.
3. Blow through the valve from port A and verify that air comes out of port B when vacuum is applied.

Specified vacuum:
66—106 mmHg (2.6—4.2 inHg)

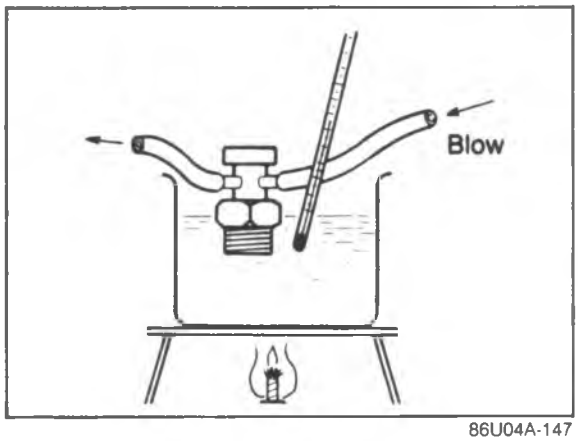

86U04A-147

Water Thermo Valve

1. Remove the water thermo valve.
2. Immerse the valve in a water-filled container.
3. Heat the water gradually and observe the temperature.
4. Blow through the valve from one vacuum port and verify that air comes out of the other port at **46—54°C (115—129°F)**.

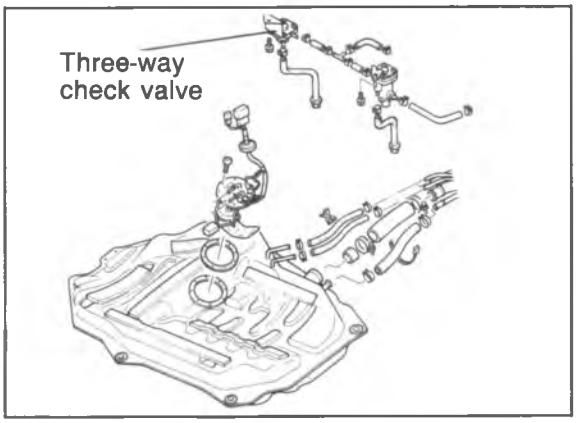

86U04A-148

Three-Way Check Valve

1. Remove the check valve.

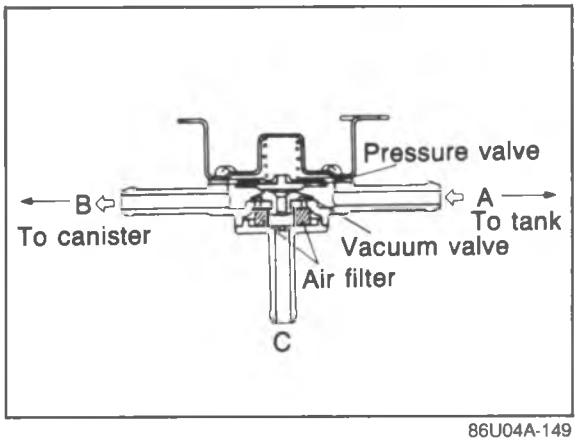

86U04A-149

2. Blow through the valve from port A, and check that air comes out of port B.
   Next, block port B and check that air comes out of port C.
3. Block port B.
4. Connect a vacuum pump to port A and verify that no vacuum is held.

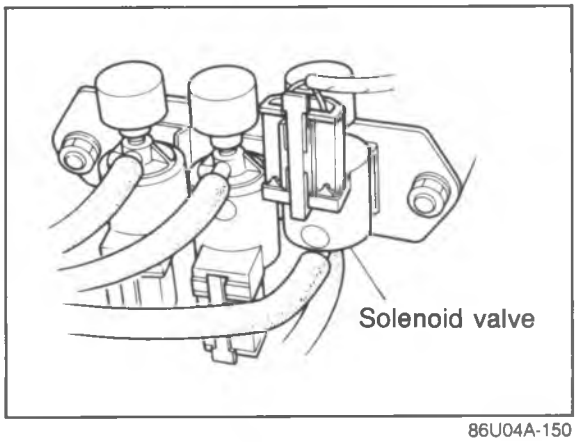

86U04A-150

Solenoid Valve (Purge)

1. Remove the solenoid valve.

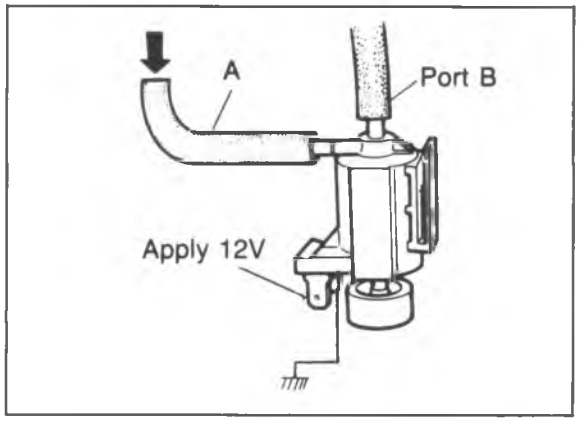

86U04A-151

2. Connect vacuum hoses to the valve as shown in the figure.
3. Blow air through the valve from hose A and check that air comes out of the valve air filter.
4. Apply 12V and ground the solenoid valve with jumper wires.
5. Blow air through the valve from hose A and check that the air comes out of port B.
6. Replace, if necessary.

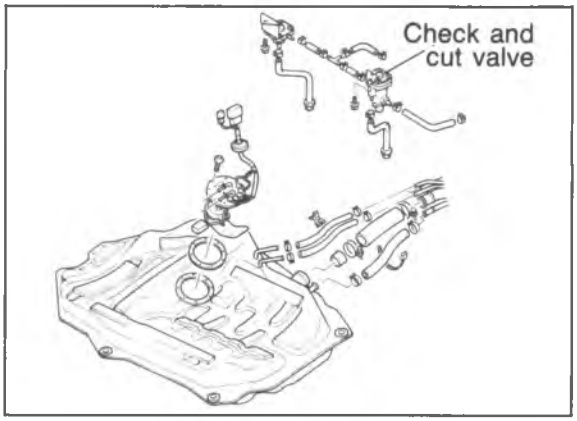

86U04A-152

Check and Cut Valve

1. Remove the check and cut valve.

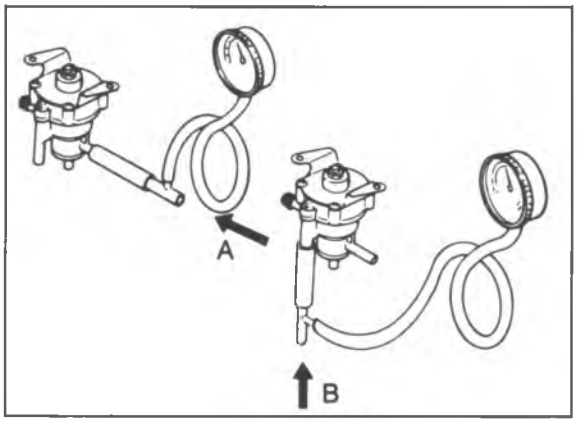

86U04A-153

2. Connect a pressure gauge to the passage that normally is connected to the fuel tank.
3. Blow through the valve from port A. Verify that the valve opens at **5.39—6.87 kPa (0.055—0.07 kg/cm^2, 0.78—1.00 psi)**.
4. Remove the pressure gauge and connect it to the passage to atmosphere.
5. Blow through the valve from port B. Verify that the valve opens at **0.98—4.91 kPa (0.01—0.05 kg/cm^2, 0.14—0.71 psi)**.

Note
The test must be performed with the valve horizontal. Otherwise, the ball in the valve will move out of position and close the passage.

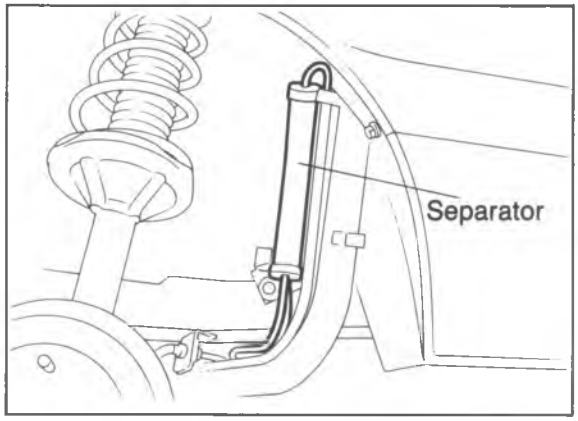

86U04A-154

Separator

1. Remove the separator.
2. Visually check the separator for damage.
3. Replace, if necessary.

POSITIVE CRANKCASE VENTILATION (PCV) SYSTEM

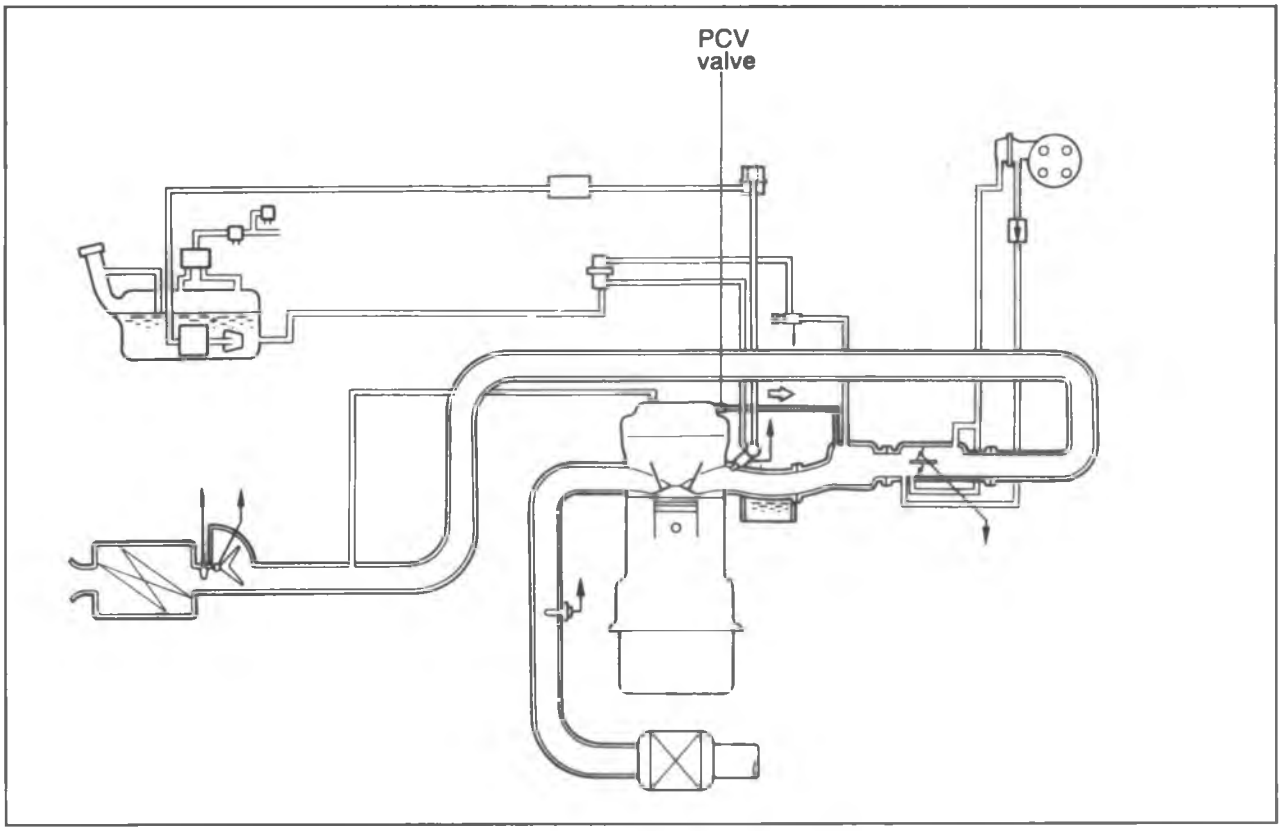

86U04A-155

The PCV valve is operated by the intake manifold vacuum.
When the engine is running at idle, the PCV valve is opened slightly and a small amount of blow-by gas is drawn into the dynamic chamber.
At high engine speeds, the PCV valve is further opened and a larger amount of blow-by gas is drawn into the dynamic chamber.

COMPONENT DESCRIPTION

Component	Function	Remarks	Application	
			New model	Previous model
PCV valve	Controls blowby gas amount pulled into engine		○	○

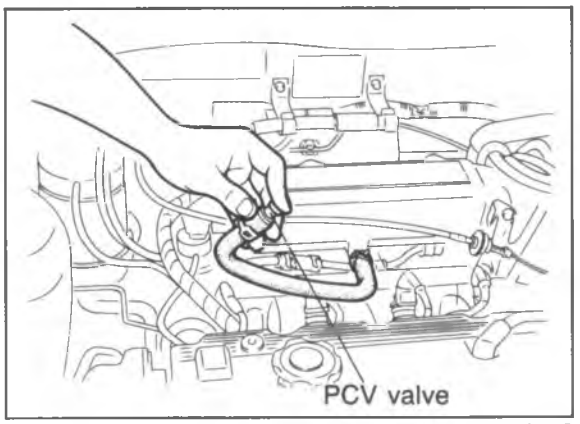

86U04A-157

PCV VALVE

1. Warm up the engine to the normal operating temperature and run it at idle.
2. Disconnect the PCV valve and the ventilation hose from the cylinder head cover.
3. Close the PCV valve opening.
4. Check that vacuum is felt.

EXHAUST SYSTEM

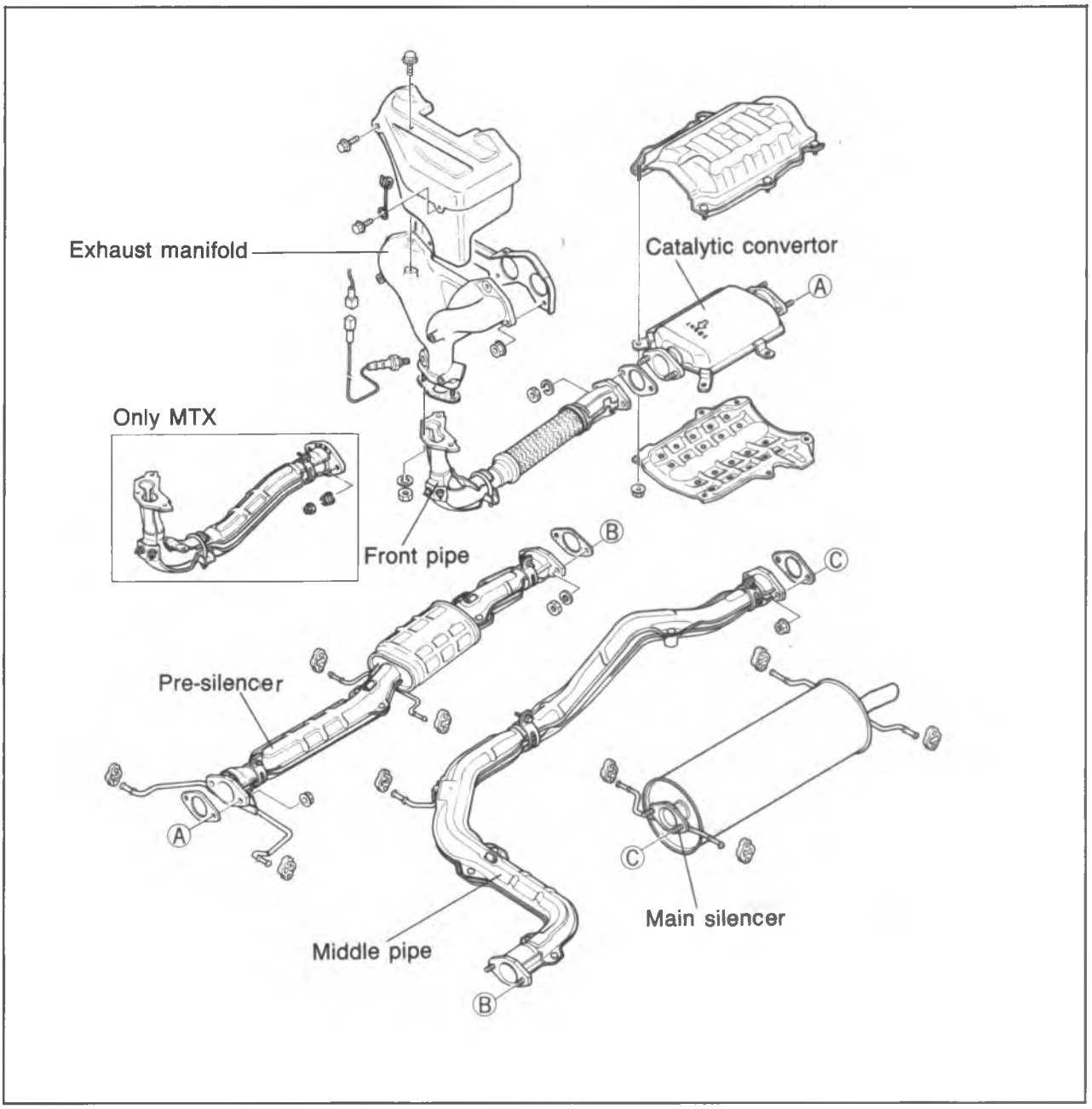

86U04A-158

The catalytic converter is used to reduce CO, HC and NOx. The converter contains a compound of platinum and rhodium. It is a three-way catalyst type with a volume of **2,100 cc (128 cu in)**.

REMOVAL AND INSTALLATION

1. Remove in the sequence shown in the figure.
2. Install in the reverse order of removal.

Torque Specifications

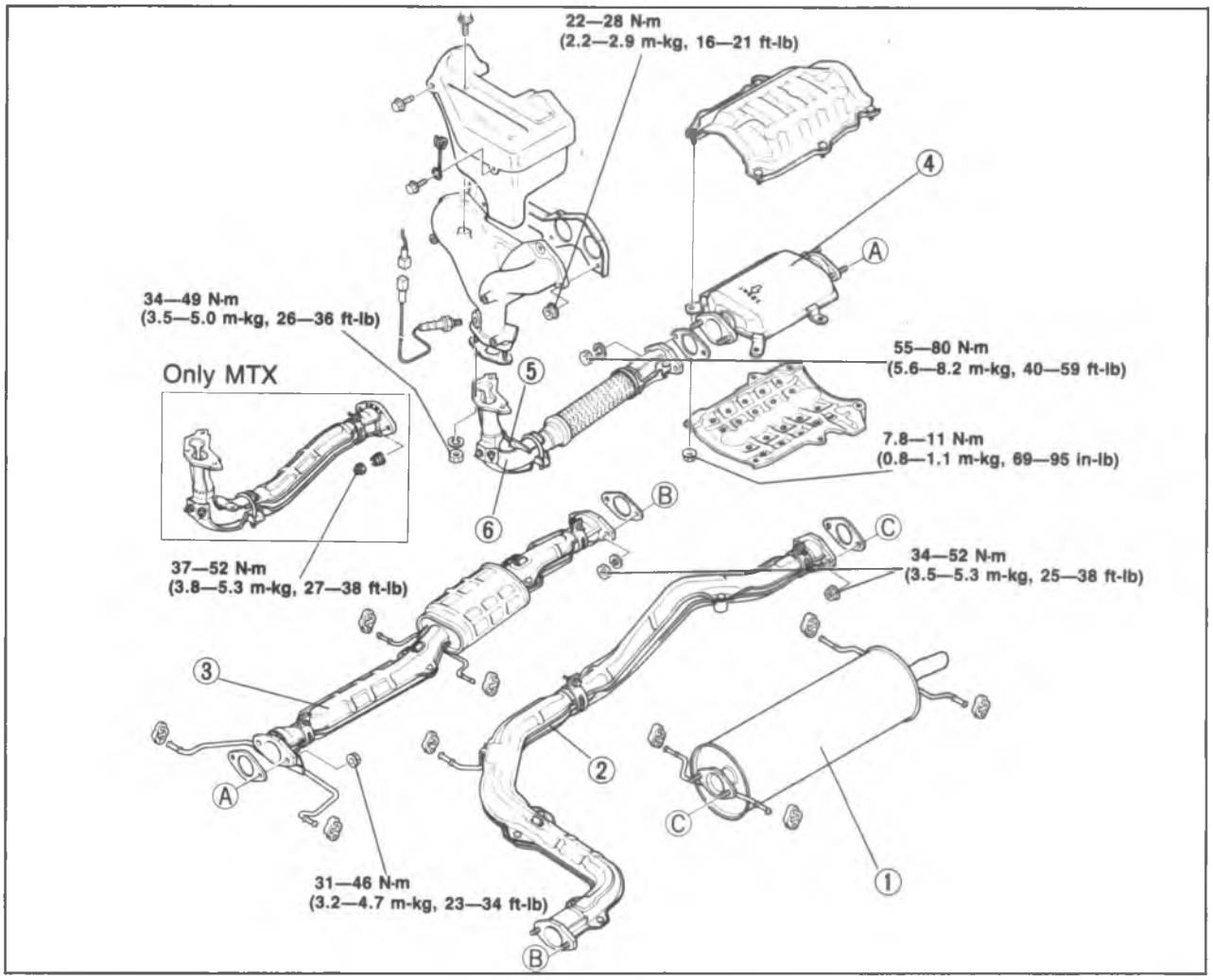

86U04A-159

1. Main silencer
2. Middle pipe
3. Pre-silencer
4. Catalytic converter
5. Bracket
6. Front pipe

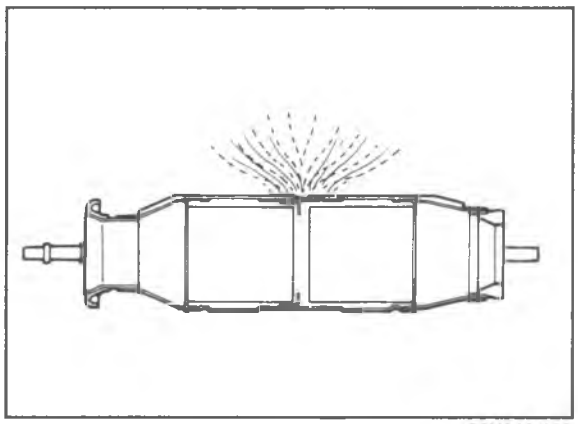

86U04A-160

INSPECTION

1. Check the catalytic converter and exhaust pipe for deterioration or restriction.
2. Check the insulation covers welded onto the catalytic converter for damage.

Note
If the insulation cover is touching the catalytic converter housing, excessive heat at the floor will occur.

SHIFT INDICATOR LIGHT CONTROL SYSTEM

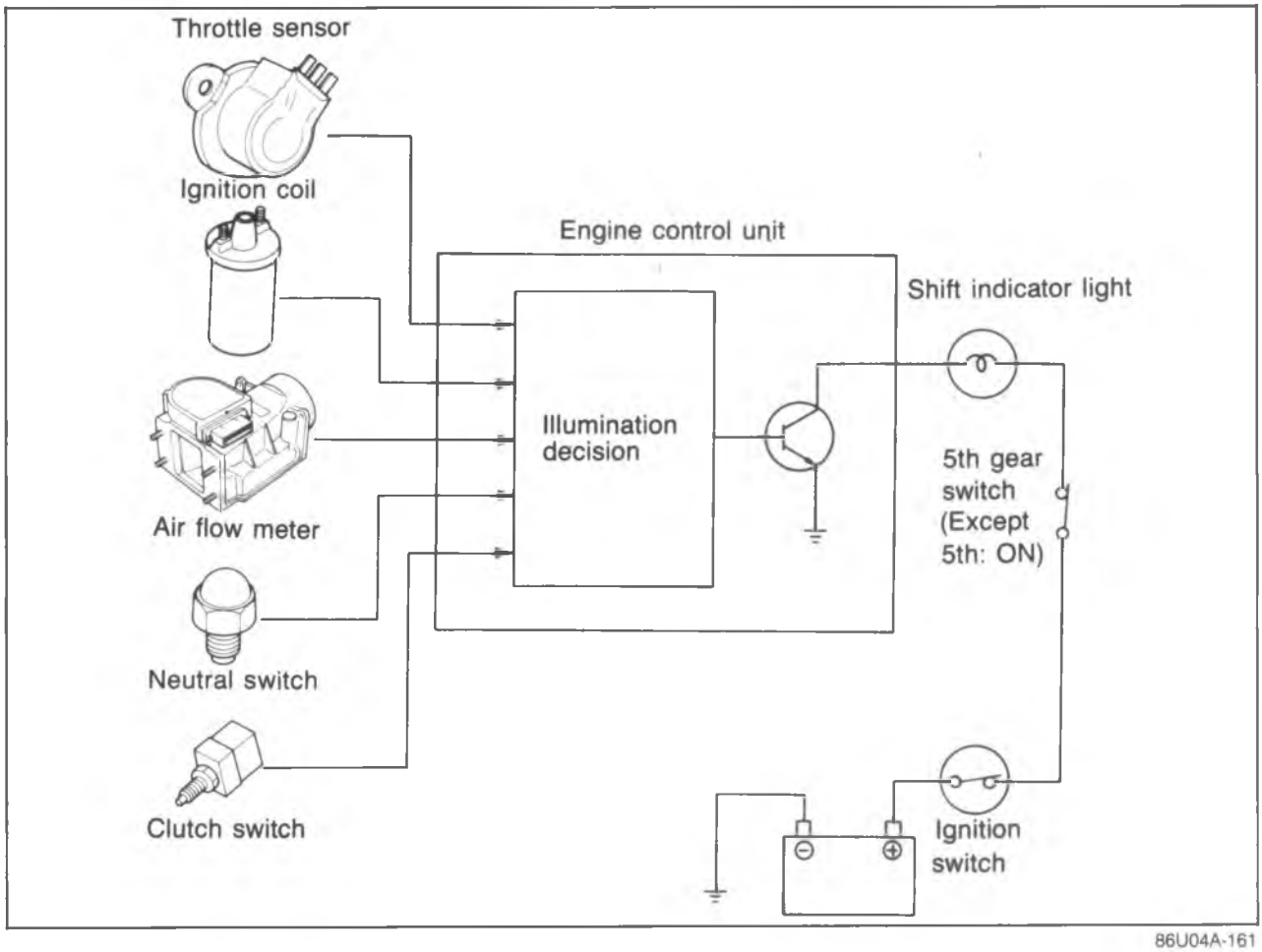

86U04A-161

The shift indicator light warns the driver when the accelerator pedal is excessively depressed in view of optimum fuel economy.

COMPONENT DESCRIPTIONS

Component	Function	Remarks	Application	
			New model	Previous model
Air flow meter	Detects amount of intake air; sends signal to control unit	Intake air temp sensor and fuel pump switch are integrated	○	○
Clutch switch	Detects in-gear condition; sends signal to control unit	Switch ON when clutch pedal depressed	○	○
Engine control unit	Detects signals from input sensors and switches; controls shift indicator light operation		○	○
5th gear switch	Detects 5th gear driving; sends signal to control unit	MTX only	○	○
Ignition coil (–) terminal	Detects engine speed; sends signal to control unit		○	○
Neutral switch	Detects in-gear condition; sends signal to control unit	Switch ON when in-gear	○	○
Throttle sensor	Detects throttle valve opening angle; sends signal to control unit	Installed on throttle body	○	○

86U04A-162

TROUBLESHOOTING

Check the condition of the wiring harness and connectors before checking the sensor or switches below.

Note
Make the system inspection first. If no problem is found, continue with the next system inspection of the Troubleshooting Guide. (Refer to pages 4A—8 and 9.)

Possible cause / Page / Symptom	Throttle sensor	Air flow meter	5th gear switch	Shift indicator light	Control unit terminal 1S	System inspection
	4A—97	4A—96	4A—94	4A—83	4A—90	4A—83
Poor fuel consumption	4	5	3	2	6	1

86U04A-163

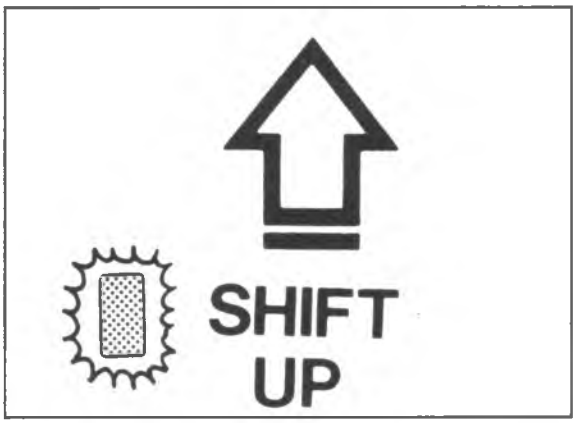

86U04A-164

System Inspection

1. Drive the vehicle in 1st gear and less than half-throttle.
2. Verify that the shift indicator light illuminates during acceleration.

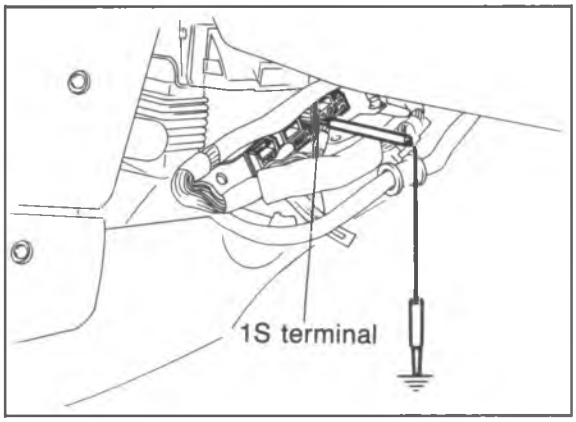

86U04A-165

Shift Indicator Light

1. Ground 1S terminal (G) of the engine control unit.
2. Shift the transmission into a forward gear (except 5th).
3. Turn the ignition switch ON.
4. Verify that the shift indicator light illuminates.
5. If the shift indicator light does not illuminate, check the shift indicator bulb and sift indicator light circuit.

CONTROL SYSTEM

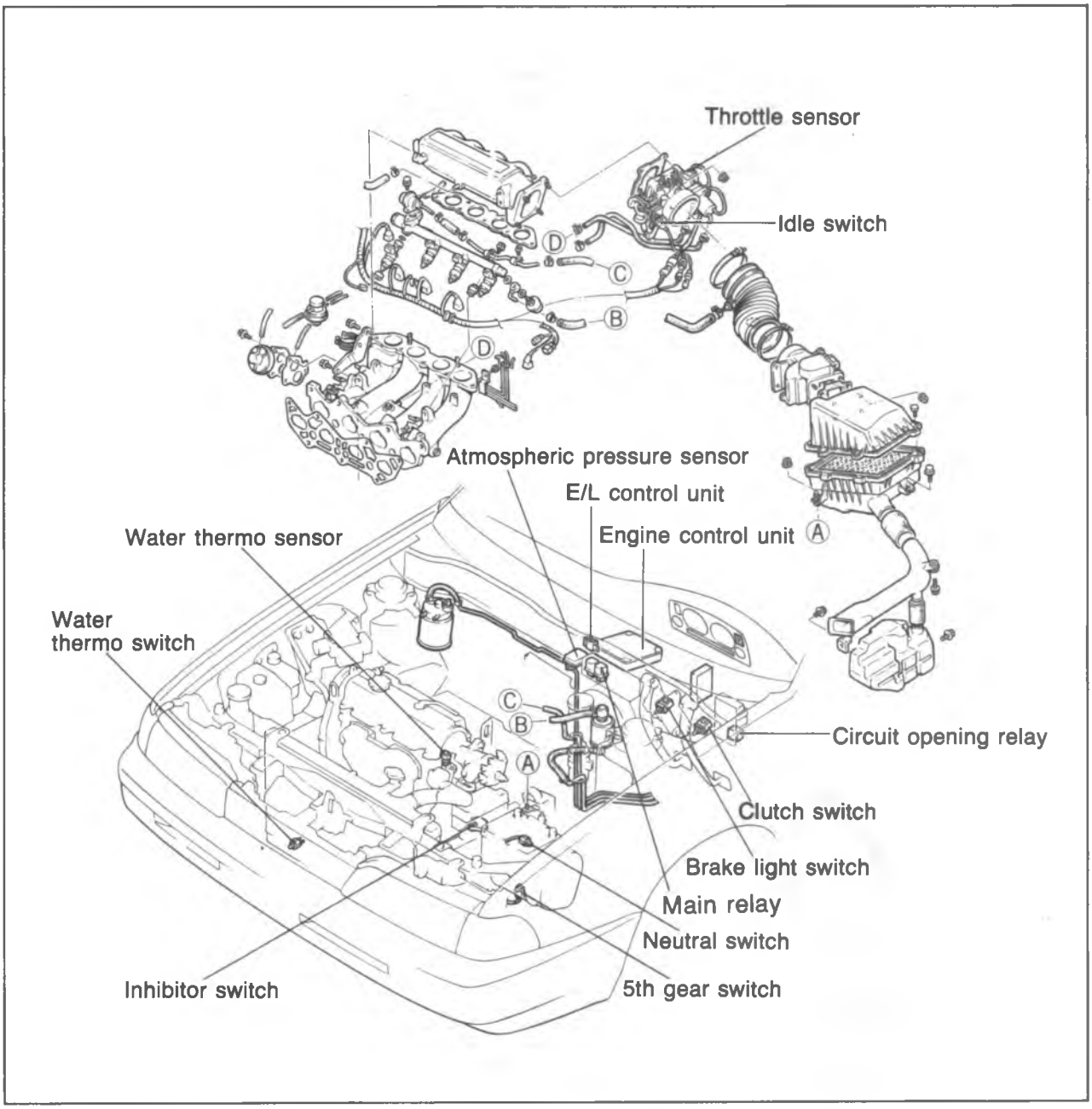

86U04A-166

The control system consists of the input devices and the control unit. The control unit controls the fuel injection amount (EGI), fuel injection pressure, bypass air amount, switch monitor function, and fail-safe function.

RELATIONSHIP CHART
Output Devices and Input Devices

INPUT DEVICES \ OUTPUT DEVICES	INJECTOR: FUEL INJECTION AMOUNT	INJECTOR: FUEL INJECTION TIMING	BAC VALVE: AIR VALVE	BAC VALVE: ISC VALVE	SOLENOID VALVE (EGR)	SOLENOID VALVE (PURGE)	SOLENOID VALVE (PRESSURE REGULATOR)	SHIFT INDICATOR LIGHT
TEST CONNECTOR	×	×	×	○	×	×	×	×
5TH GEAR SWITCH	×	×	×	×	×	×	×	○
BRAKE LIGHT SWITCH	○	×	×	×	×	×	×	×
VEHICLE SPEED SWITCH	○	×	×	×	×	×	×	×
ELECTRICAL LOAD CONTROL UNIT	×	×	×	○	×	×	×	×
P/S PRESSURE SWITCH	×	×	×	○	×	×	×	×
A/C SWITCH	○	×	×	○	×	○	×	×
IGNITION SWITCH (STA POSITION)	○	○	×	×	×	×	○	○
INHIBITOR SWITCH and EC—AT CONTROL UNIT	○	×	×	○	○	×	×	×
NEUTRAL AND CLUTCH SWITCH	○	×	×	○	×	×	×	○
OXYGEN SENSOR	○	×	×	×	×	×	×	×
WATER THERMO SWITCH(RADIATOR)	○	×	×	×	○	×	×	×
ATMOSPHERIC PRESSURE SENSOR	○	×	×	○	×	×	×	×
INTAKE AIR THERMO SENSOR	○	×	×	○	×	×	○	×
WATER THERMO SENSOR	○	×	×	○	○	○	○	×
IDLE SWITCH	○	○	×	○	×	×	×	○
THROTTLE SENSOR	○	○	×	○	○	×	○	○
AIR FLOW METER	○	×	×	×	×	○	×	○
IGNITION COIL	○	○	×	○	○	○	○	○

○: Related
×: Not related

86U04A-167

Output Devices and Engine Conditions

ENGINE CONDITIONS / OUTPUT DEVICES		CRANKING (COLD ENGINE)	WARNING UP (DURING IDLE)	MEDIUM LOAD		ACCEL-ERATION	HEAVY LOAD	DECEL-ERATION	IDLE (THROT-TLE VALVE FULLY CLOSED)	IGN: ON (ENGINE NOT RUNNING)	REMARKS
				COLD	WARM						
INJE-CTOR	INJECTION	Rich			Rich and lean	Rich		Fuel cut	Rich and lean	No injection	
	INJECTION TIMING	1 group (once per revolution)				1 group (once per revolution) (once per two revolutions)*			1 group (once per revolution)		Above 6,300 rpm: fuel cut *Above 4,500 rpm
BAC VALVE	AIR VALVE	Open*		Close							*Coolant temp: below 50°C (122°F)
	ISC VALVE	Large amount of bypass air	Large amount of bypass air*	Small amount of bypass air						No bypass	*In extreme cold condition
SOLENOID VALVE (EGR)		ON (EGR cut)			OFF (EGR)	ON (EGR cut)	OFF (EGR)	ON (EGR cut)	ON (EGR cut)*	ON	*ATX D range: OFF (NO EGR due to no vacuum to system)
SOLENOID VALVE (PURGE)		OFF (2nd stage not operated)		ON (2nd stage operates)					OFF (2nd stage not operated)	OFF	1st stage: controlled by water thermo valve
SOLENOID VALVE (PRESSURE REGULA-TOR CONTROL)		OFF (Vacuum to pressure regulator)							After starting*: ON (Vacuum cut)	OFF	*During hot start only
SHIFT INDICATOR LIGHT		Not illuminated		Illuminates (Except in 5th gear)*				Not illuminated			*Intake manifold vacuum less than specified value (acceleration or load)

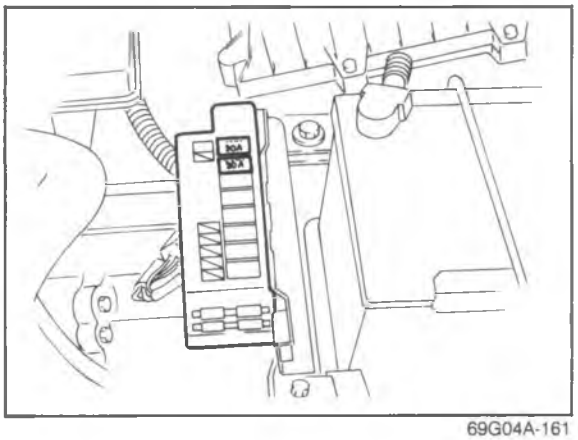

69G04A-161

EGI MAIN FUSE

Inspection

Check the continuity of EGI main fuse.

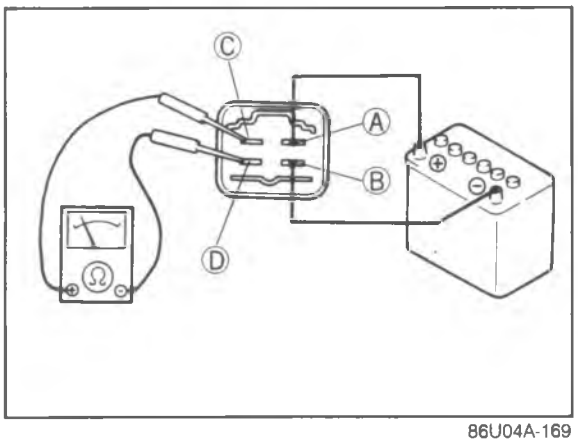

86U04A-169

MAIN RELAY

1. Check that a "clicking" sound is heard at the main relay when turning the ignition switch ON and OFF.
2. Apply 12V and a ground to (A) and (B) terminals of the main relay.
3. Check continuity at terminals using an ohmmeter.

Terminals \ Operation	12V Not applied	12V Applied
Ⓒ — Ⓓ	No continuity	Continuity

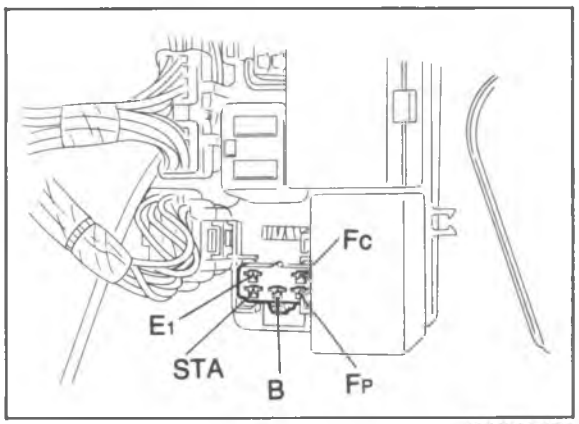

86U04A-170

CIRCUIT OPENING RELAY

Relay Circuit

1. Remove the circuit opening relay.
2. Check the circuit as described.

Terminal	Checking item	Correct result
Fp	Resistance	0.2—30Ω
Fc	Continuity (cranking)	∞
B	Voltage (Ign: ON)	Battely voltage
STA	Voltage (Cranking)	Approx. 9V
E_1	Continuity	∞

Circuit Opening Relay

1. Apply 12V and a ground to the terminals below and check the circuit opening relay as described.

12V	Grounded	Correct result
STA	E_1	B ↔ FP: Continuity
B	Fc	Fp: Battery voltage

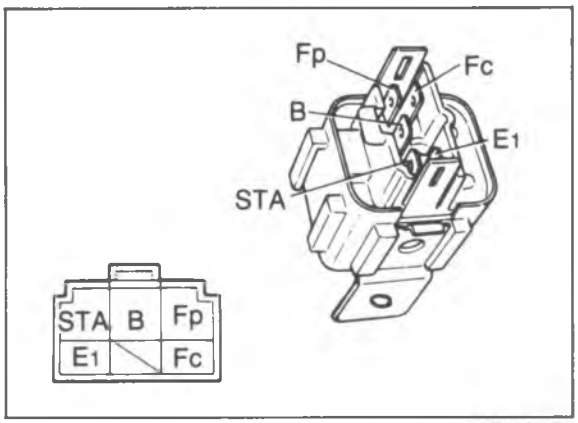

69G04A-164

Resistance

Check the resistance between the terminals using an ohmmeter.

Between terminals	Resistance (Ω)
STA ↔ E1	15 ~ 30
B ↔ Fc	80 ~ 150
B ↔ Fp	∞

ENGINE CONTROL UNIT
Engine Signal Monitor (49 9200 162) and Adapter (49 9200 163).

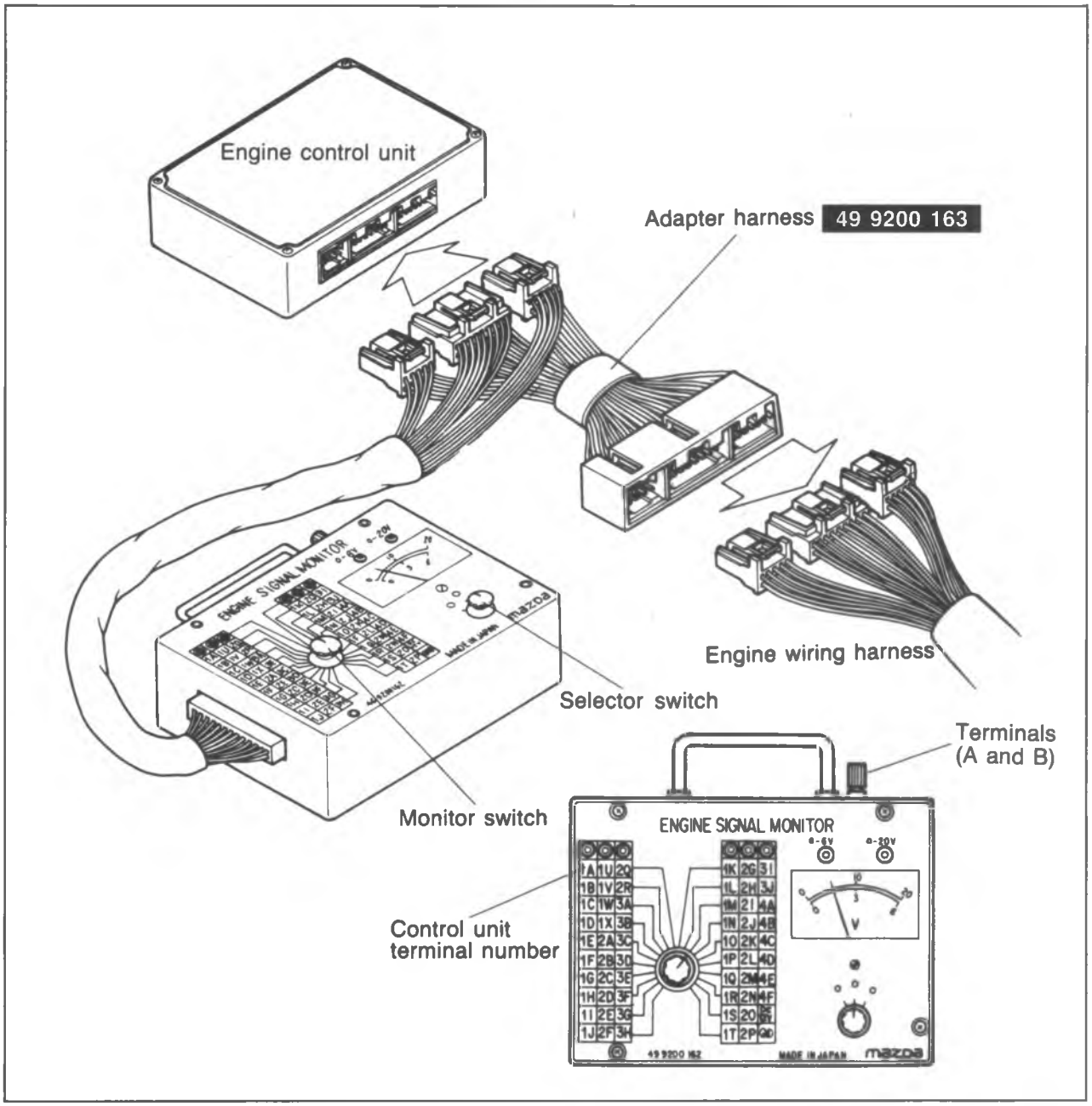

86U04A-171

The **Engine Signal Monitor** (49 9200 162) was developed to check the control unit terminal voltages. This monitor easily inspects the individual terminal voltages through selection of the monitor switch.

How to Use the Engine Signal Monitor
1. Connect the **Engine Signal Monitor** (49 9200 162) between the engine control unit and the engine harness using the **adapter** (49 9200 163).
2. Turn the selector switch and monitor switch to select the terminal number.
3. Check the terminal voltage.

Caution
Never apply voltage to terminals A and B.

Wiring Diagram

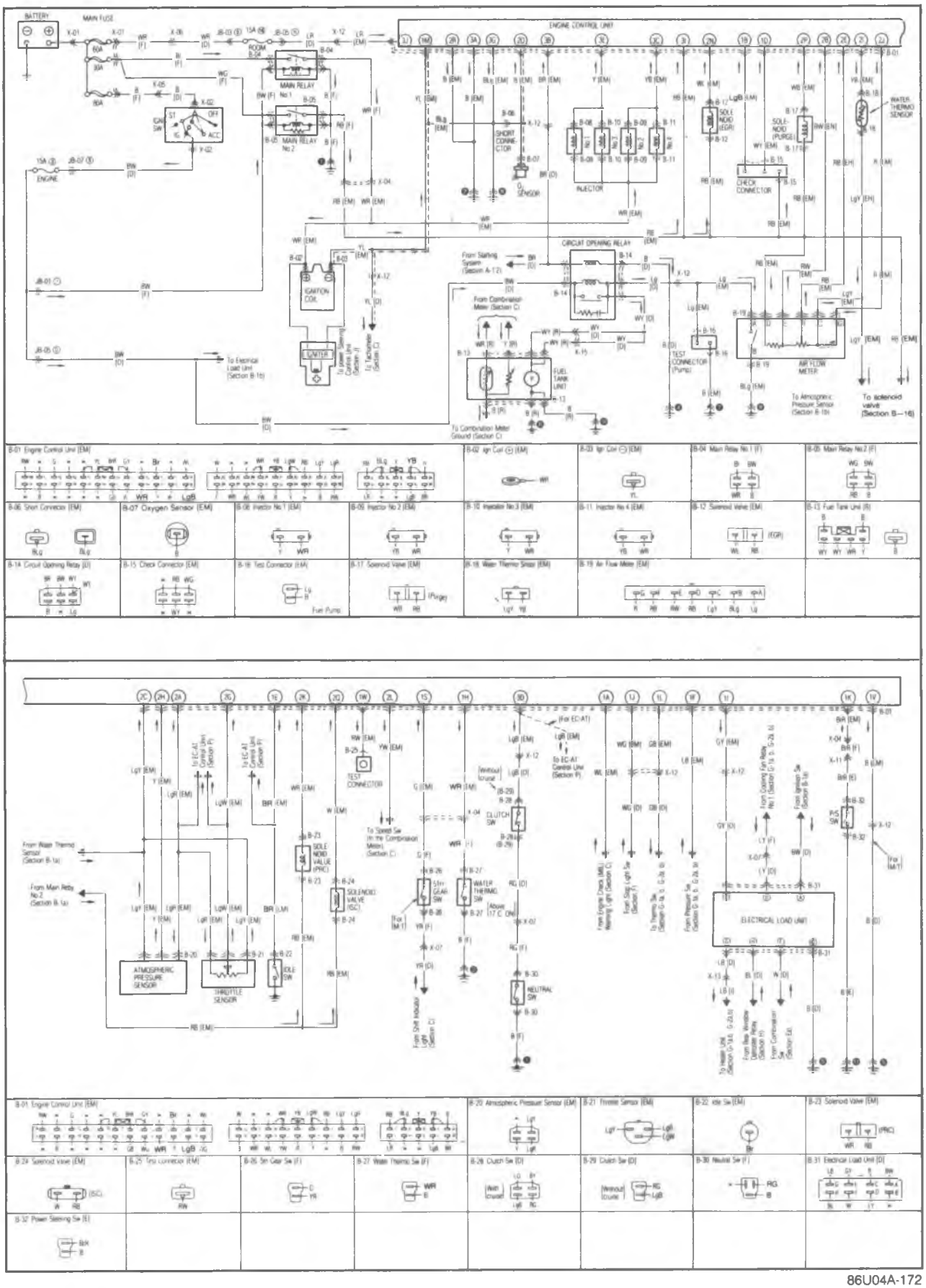

86U04A-172

Terminal Voltage

If the input and output devices and related wiring are normal, but the engine control unit terminal voltage is incorrect, replace the engine control unit.

Terminal	Input	Output	Connection to	Voltage (After warming-up)		Remarks
				IGN: ON	Idle	
1A		○	Malfunction indicator light	For 3sec. after ignition switch OFF → ON: below 4.8V (light illuminates) After 3sec.: Battery voltage (light does not illuminate)		• Test connector grounded • Light illuminate: below 4.8V • Light does not illuminate: Battery voltage
1B		○	Self-Diagnosis Checker (Code number)	For 3sec. after ignition switch OFF → ON: below 6.2V (Buzzer sounds) After 3sec.: Battery voltage (Buzzer does not sound)		• Using Self-Diagnosis Checker and test connector grounded • Buzzer sounds: below 6.2V • Buzzer does not sound: Battery voltage
1C	—	—	—	—		—
1D		○	Self-Diagnosis Checker (Monitor lamp)	Test connector grounded For 3sec. after ignition switch OFF → ON: below 6.2V (light illuminates) After 3sec.: Battery voltage (light does not illuminate)	(Test connector grounded) approx. 5V (Test connector not grounded) Monitor lamp ON: below 6.2V Monitor lamp OFF: Battery voltage	With Self-Diagnosis Checker
1E	○		Idle switch	Accelerator pedal released: below 0.5V Accelerator pedal depressed: above 7.7V		
1F		○	A/C relay	Battry voltage	A/C switch ON: below 2.5V A/C switch OFF: Battery voltage	Blower motor ON
1G	—	—	—	—		—
1H	○		Water thermo switch	Above 7.3V		Radiator temp.: below 17°C (63°F)
				Below 1.5V		Radiator temp.: above 17°C (63°F)
1I	○		Electrical load control unit	Electrical load ON: below 1.5V Electrical load OFF: above 7.3V		Electrical load: Rear defroster Headlight Blower motor (3rd & 4th position) Electrical fan
1J	○		Brake light switch	Brake pedal released: below 3.6V Brake pedal depressed: above 10.0V		
1K	○		P/S pressure switch	Constant above 10.5v	P/S ON: below 1.5V P/S OFF: above 10.5V	
1L	○		A/C switch	A/C switch ON: below 1.5V A/C switch OFF: above 10.0V		Blower motor: ON
1M	○		Ignition coil ⊖ terminal	Battery voltage	*1 Battery voltage	*1 Engine Signal Monitor: green and red lights flash
1N	—	—	—	—		—

Terminal	Input	Output	Connection to	Voltage (After warming-up)		Remarks
				IGN: ON	Idle	
1O	—	—	—	—		—
1P	—	—	—	—		—
1Q	—	—	—	—		—
1R	—	—	—	—		—
1S		○	Shift indicator light (MTX)	Battery voltage		Shift indicator light illuminates: below 4.8V
1T	—	—	—	—		—
1U	—	—	—	—		—
1V	○		—	Constant below 1.5V		MTX
				Constant above 10.5V		ATX
1W	○		Test connector	Test connector grounded: below 0.5V Test connector not grounded: above 10.5V		Green connector, 1-pin
1X	—	—	—	—		—
2A		○	V ref	4.5—5.5V		
2B	○		Air flow meter (Vc)	7—9V		
2C	—	—	Ground (E2)	0V		
2D	○		Oxygen sensor	0V	0—1.0V	• Cold engine: 0V at idle • After warming-up: Increase engine speed: 0.5—1.0V Deceleration: 0—0.4V
2E	○		Air flow meter (Vs)	Approx. 1.7V	Approx. 3—5V	Increase engine speed: voltage increases
2F	—	—	—	—		—
2G	○		Throttle sensor	Accelerator pedal released: approx. 0.5V (depends on 2A terminal voltage)		Max. voltage (Throttle valve fully open): approx. 4.3V
2H	○		Atmospheric pressure sensor	At sea level: approx. 4.0V		
2I	○		Water thermo sensor	0.3—0.6 V		Engine coolant temp. 20°C (68°F): approx. 2.5V
2J	○		Air flow meter (Intake air thermo sensor)	Approx. 2.5V at 20°C (68°F)		
2K		○	Solenoid valve (Pressure regulator control)	For 120 sec. after ignition switch OFF → ON: below 3.5V	For 120 sec. after starting: below 3.5V	Hot condition: Coolant temp. above 70°C (158°F) Intake air temp. above 20°C (63°F)
				Battery voltage		Other conditions
2L	○		Speedometer	Battery voltage		• Above 113 mph (180 km/h): below 1.0V
2M	—	—	—	—		—

Terminal	Input	Output	Connection to	Voltage (After warming-up)		Remarks
				IGN: ON	Idle	
2N		○	Solenoid valve (EGR)	Below 3.5V		• Cold engine: below 3.5V Radiator coolant temp.—below 17°C (63°F) or Engine coolant temp.—below 70°C (158°F) • Engine above approx. 1,500 rpm: Battery voltage
2O	—	—	—	—		—
2P		○	Solenoid valve (Purge control valve)	Battery voltage		• Medium and high load: below 3.5V
2Q		○	Solenoid valve (Idle speed control valve)	Approx. 1.7—11V		
2R	—	—	Ground (E_{02})	0V		
3A	—	—	Ground (E_{01})	0V		
3B	○		Ignition switch (Start position)	Below 2.5V		While cranking: battery voltage
3C		○	Injector (No. 4 and No. 2)	Battery voltage	*1 Battery voltage	*1 Engine Signal Monitor green and red lights flash
3D	○		Inhibitor switch through EC-AT unit	"N" or "P" range: below 2.5V Other ranges: battery voltage		ATX
			Neutral and clutch switch	In-gear condition Clutch pedal depressed: battery voltage Clutch pedal released: below 0.5V		MTX (Neutral: constant battery voltage)
3E		○	Injector (No. 1 and No. 3)	Battery voltage	*1 Battery voltage	*1 Engine Signal Monitor: green and red lights flash
3F	—	—	—	—		—
3G	—	—	Ground (E_1)	0V		
3H	—	—	—	—		—
3I	○	—	Main relay	Battery voltage		
3J	—	—	Battery	Battery voltage		For back-up

86U04A-173

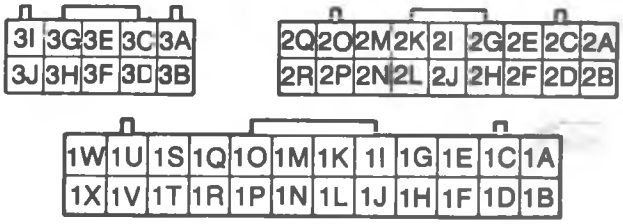

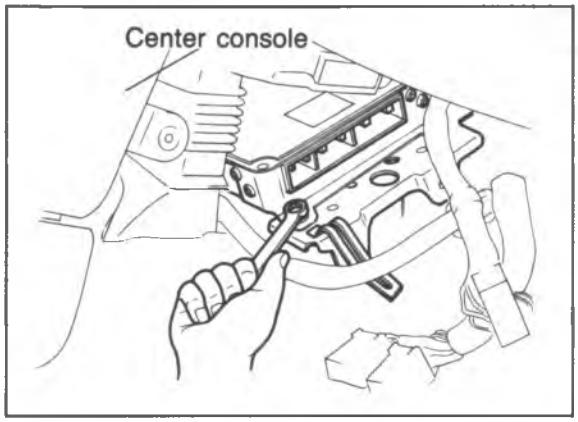

86U04A-174

Replacement

1. Disconnect the negative battery cable.
2. Remove the front console covers (right and left).
3. Disconnect the connectors from the control unit.
4. Replace the control unit.

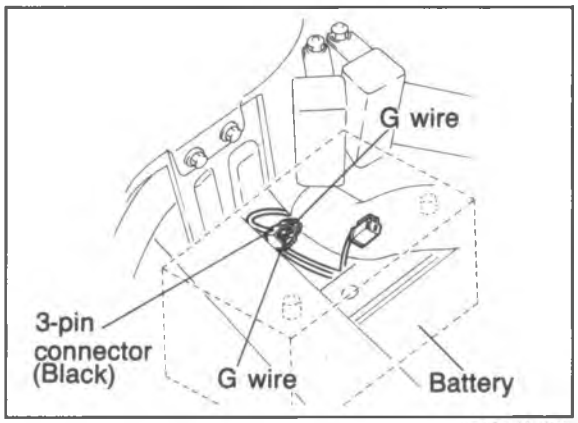

69G04A-171

NEUTRAL SWITCH

Inspection

1. Disconnect the neutral switch connector.
2. Connect an ohmmeter to the switch.
3. Check continuity of the switch.

Transmission	Continuity
In neutral	No
In other ranges	Yes

4. After checking, connect the switch connector.

Note
Refer to section 7A for replacement of the neutral switch.

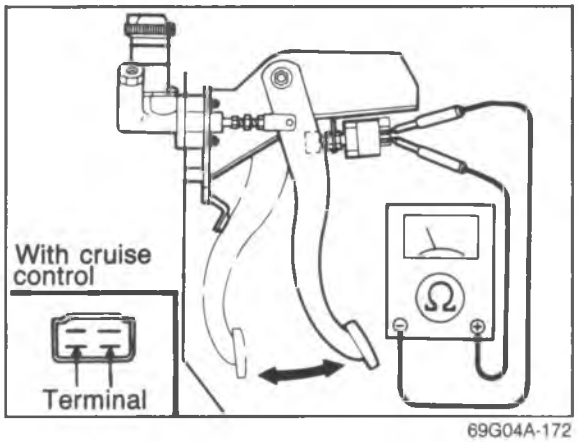

69G04A-172

CLUTCH SWITCH

Inspection

1. Disconnect the clutch switch connector.
2. Connect an ohmmeter to the switch.
3. Check continuity of the switch.

Pedal	Continuity
Depressed	No
Released	Yes

4. After checking, connect the switch connector.

Note
Refer to section 6 for replacement of the clutch switch.

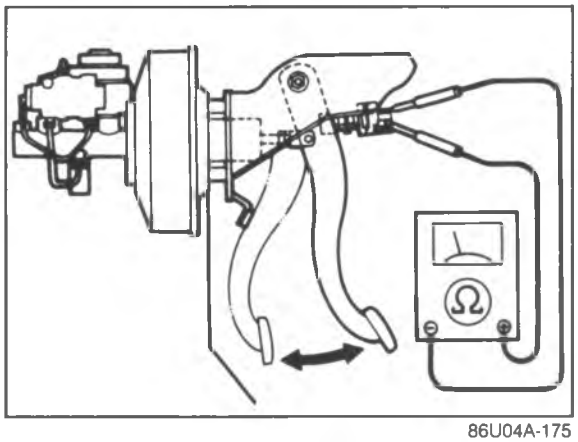

86U04A-175

BRAKE LIGHT SWITCH

Inspection

1. Disconnect the brake light switch connector.
2. Connect an ohmmeter to the switch.
3. Check the continuity of the switch.

Pedal	Continuity
Depressed	Yes
Released	No

4. After checking, connect the switch connector.

Note
Refer to section 11 for replacement of the brake switch.

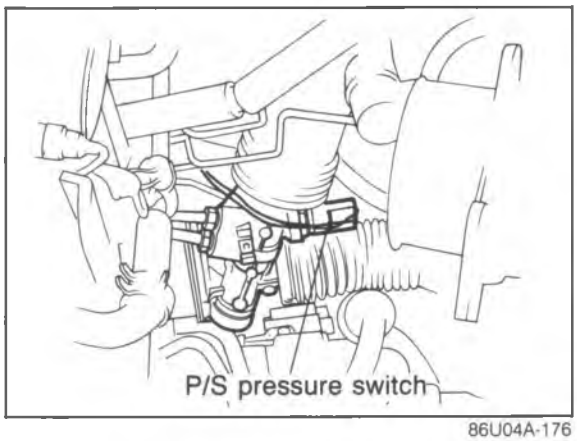

86U04A-176

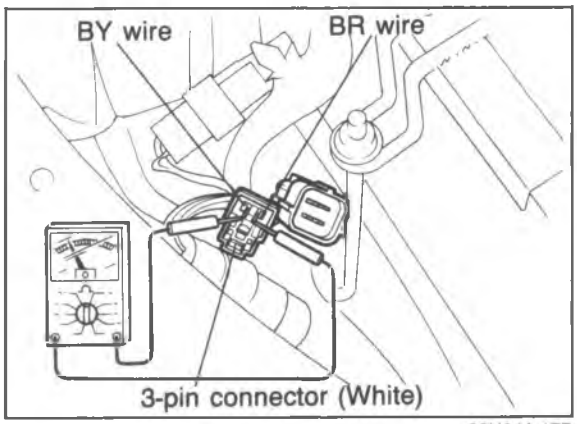

86U04A-177

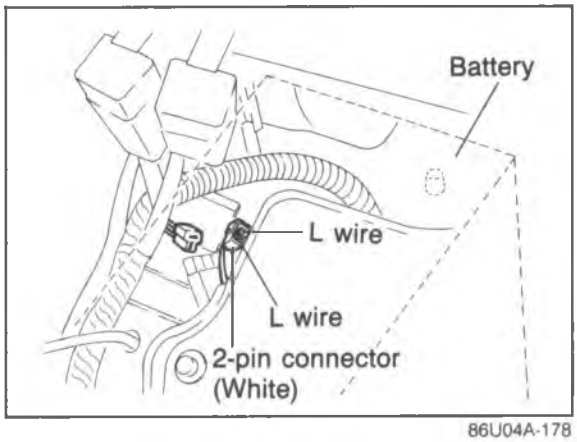

86U04A-178

P/S PRESSURE SWITCH

Inspection

1. Disconnect the P/S pressure switch connector.
2. Connect an ohmmeter to the switch.
3. Start the engine. Check continuity of the switch while turning the steering wheel at idle.

P/S	Continuity
Turning	Yes
Not turning	No

4. Connect the switch connector after checking.

Note
Refer to section 10 for replacement of the P/S pressure switch.

INHIBITOR SWITCH

Inspection

1. Disconnect the inhibitor switch connector.
2. Connect an ohmmeter to the switch.
3. Check continuity of the switch.

Position	Continuity
P and N ranges	Yes
Other ranges	No

4. Connect the switch connector after checking.

Note
Refer to Section 7B for replacement of the inhibitor switch.

5TH GEAR SWITCH

1. Disconnect the 5th gear switch connector.
2. Connect an ohmmeter to the terminals.
3. Check continuity fo the switch.

Transmission	Continuity
In 5th gear	No
In other gears	Yes

4. Connect the switch connector after checking.

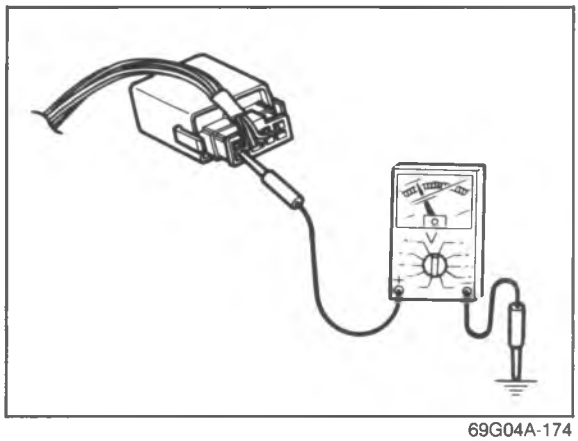

69G04A-174

E/L CONTROL UNIT

Inspection

1. Connect a voltmeter between the E/L control unit and ground.
2. Start the engine and check the terminal voltages as described below.

Terminal	Input	Output	Connection to	Voltage (after warm-up)		Remarks
				Ignition switch: ON	Idle	
A (BW)	—	—	Ignition switch	Battery voltage		
B	—	—	—	—	—	—
C (B)	—	—	Ground	0V		
D (LY)	○		Electrical fan relay	Battery voltage		Coolant temp.: below 97°C (207°F)
				Below 1.5V		Coolant temp.: above 97°C (207°F)
E (GY)		○	Control unit (1I)	0V		E/L: ON
				Battery voltage		E/L: OFF
F (W)	○		Headlight switch	Battery voltage		Headlight switch: ON
				Below 1.5V		Headlight switch: OFF
G (LB)	○		Blower motor switch	Below 1.5V		Blower motor switch: ON (3rd or 4th position)
				Approx. 5V		Others
H (BL)	○		Rear defroster switch	Below 1.5V		Rear defroster switch: ON
				Battery voltage		Rear defroster switch: OFF

86U04A-179

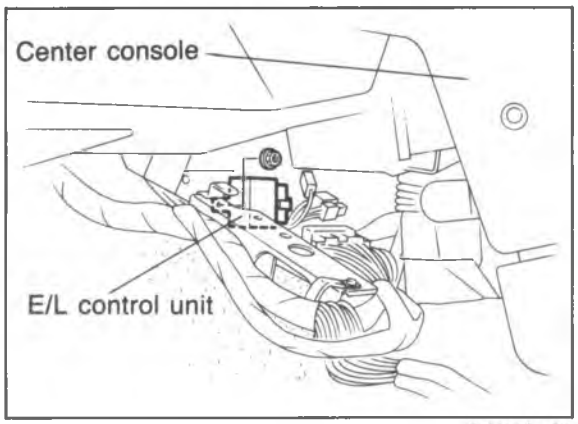

86U04A-180

Replacement

1. Remove the engine control unit. (Refer to page 4A—93)
2. Replace the E/L control unit.
3. Install in the reverse order of removal.

AIR FLOW METER

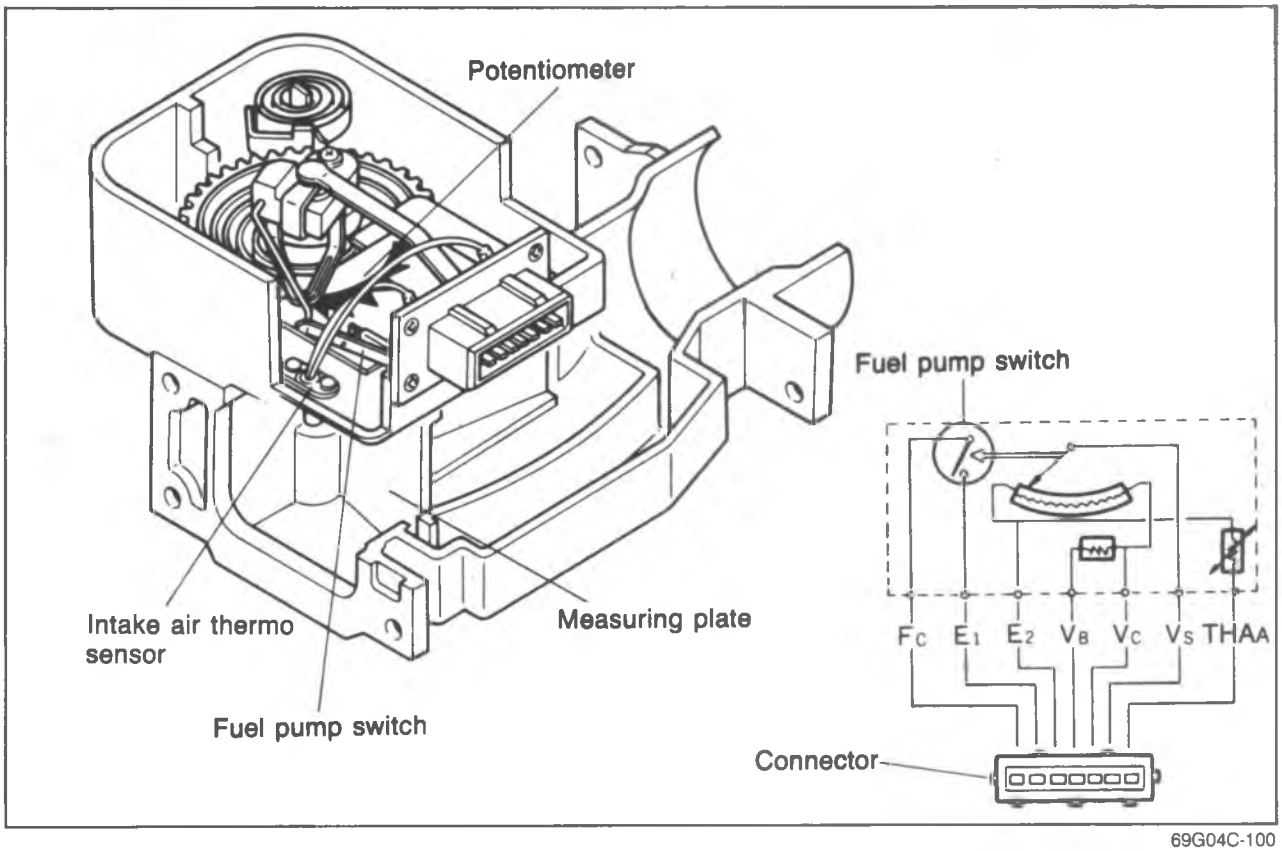

69G04C-100

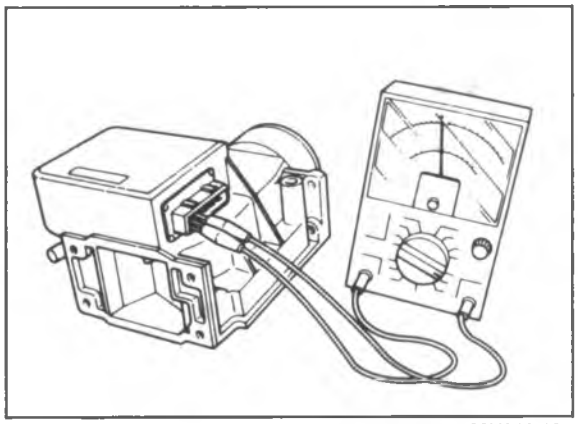

86U04A-181

Inspection

1. Remove the air flow meter. (Refer to page 4A—32)
2. Check the air flow meter body for cracks.
3. Verify that the measuring plate moves smoothly.
4. Disconnect the connector from the air flow meter.
5. Using an ohmmeter, check resistance between the terminals with the measuring plate fully closed and fully open.
6. Connect the connector to the air flow meter after inspecting.

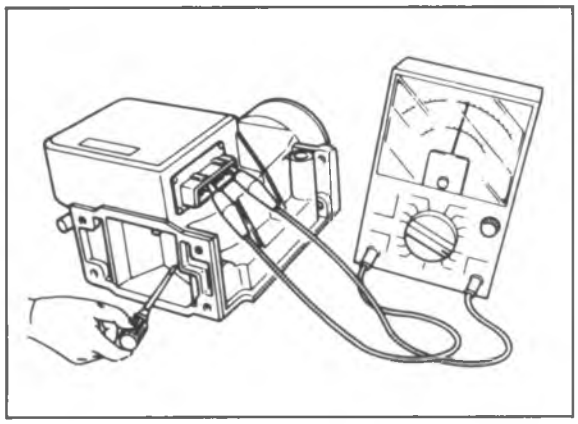

86U04A-182

Terminal	Resistance (Ω)	
	Fully closed	Fully open
$E_2 \leftrightarrow V_S$	20—400	20—1,000
$E_2 \leftrightarrow V_C$	100—400	
$E_2 \leftrightarrow V_B$	200—400	
$E_2 \leftrightarrow THA$ (Intake air thermo sensor)	–20°C (–4°F) 20°C (68°F) 60°C (140°F)	13.6—18.4 kΩ 2.21—2.69 kΩ 493—667 Ω
$E_1 \leftrightarrow F_C$	∞	0

Note

Refer to page 4A—32 for replacement of the air flow meter.

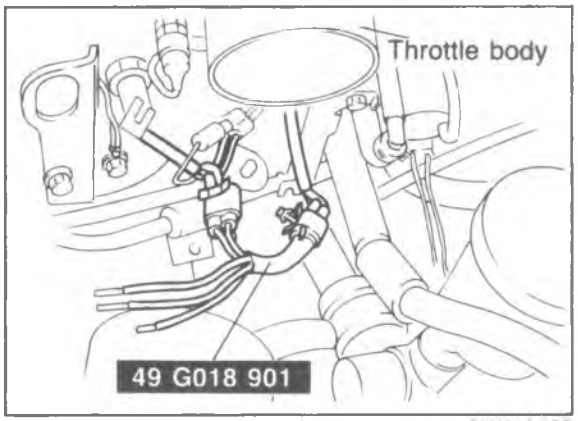

86U04A-183

THROTTLE SENSOR

Caution
Use a precision voltmeter with a scale of 0.01V to inspect or adjust the throttle sensor.

Inspection

1. Remove the air hose from the throttle body.
2. Disconnect the throttle sensor connector (3-pin).
3. Connect the **SST** between the throttle sensor and the wiring harness.
4. Turn the ignition switch ON.
5. Make sure that the throttle valve is fully closed.

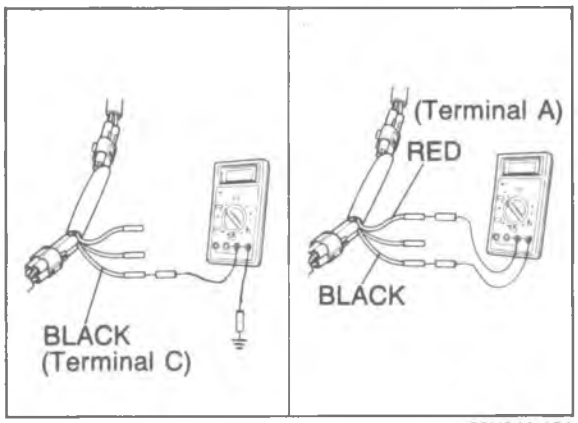

86U04A-184

6. Measure **BLACK** and **RED** wire voltages. Check that the voltages are as specified.

Specification:
BLACK wire — Approx. 0V
RED wire — 4.5—5.5V

7. If not correct, check the battery voltage and wiring harness. If these are OK, replace the engine control unit.
8. Record the **RED** wire voltage.

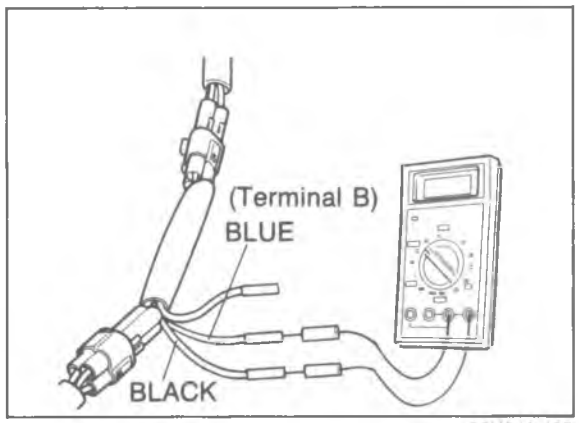

86U04A-185

9. Check that **BLUE** wire voltage for the recorded **RED** wire voltage is as specified below.

Specification:

RED wire voltage (V)	BLUE wire voltage (V)	RED wire voltage (V)	BLUE wire voltage (V)
4.50—4.59	0.37—0.54	5.10—5.19	0.42—0.61
4.60—4.69	0.38—0.55	5.20—5.29	0.43—0.62
4.70—4.79	0.39—0.56	5.30—5.39	0.44—0.63
4.80—4.89	0.40—0.57	5.40—5.49	0.44—0.64
4.90—4.99	0.40—0.58	5.50	0.44—0.66
5.00—5.09	0.41—0.60		

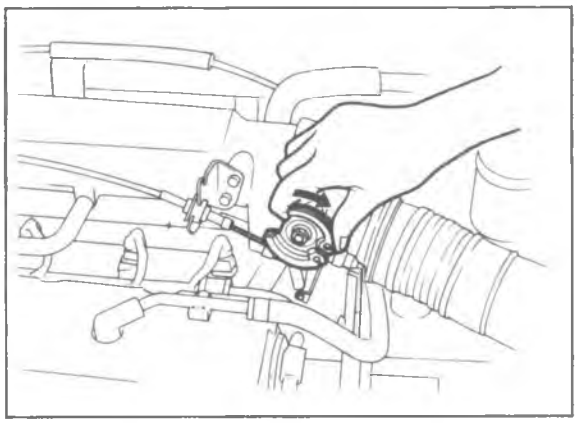
86U04A-186

10 Hold the throttle valve fully open.
11 Check that **BLUE** wire voltage for the recorded **RED** wire voltage is as specified.

Specification:

RED wire voltage (V)	BLUE wire voltage (V)	RED wire voltage (V)	BLUE wire voltage (V)
4.50—4.59	3.58—4.23	5.10—5.19	4.05—4.79
4.60—4.69	3.66—4.32	5.20—5.29	4.13—4.88
4.70—4.79	3.74—4.41	5.30—5.39	4.21—4.98
4.80—4.89	3.82—4.51	5.40—5.49	4.29—5.07
4.90—4.99	3.90—4.60	5.50	4.29—5.17
5.00—5.09	3.97—4.70		

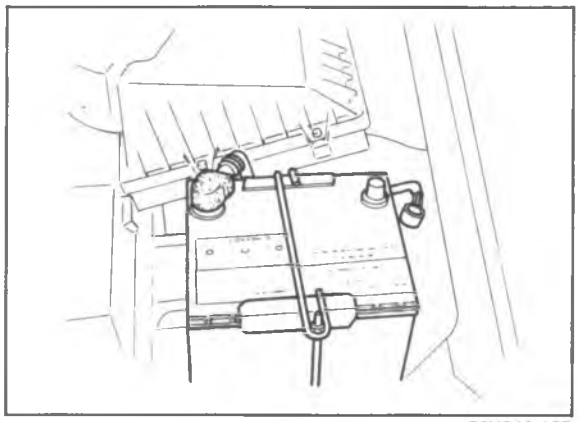

86U04A-187

12 If not correct, replace the throttle sensor.
13 Turn the ignition OFF.
14 Disconnect the **SST** and reconnect the throttle sensor connector.
15 Disconnect the negative battery terminal and depress the brake pedal for at least 5 seconds to eliminate the control unit malfunction memory.

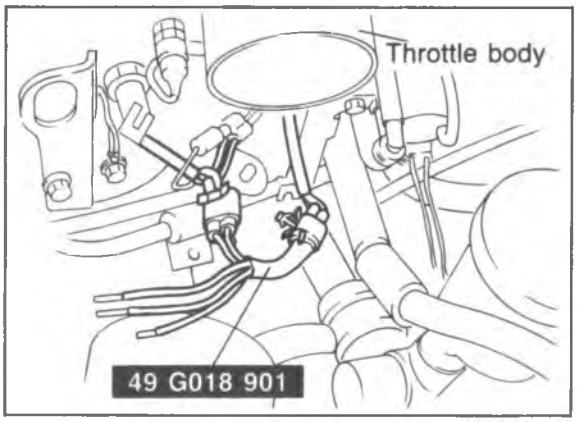

86U04A-188

Adjustment

1. Remove the air hose from the throttle body.
2. Disconnect the throttle sensor connector (3-pin).
3. Connect the **SST** between the throttle sensor and the wiring harness.
4. Turn the ignition switch ON.
5. Make sure the throttle valve is fully closed.

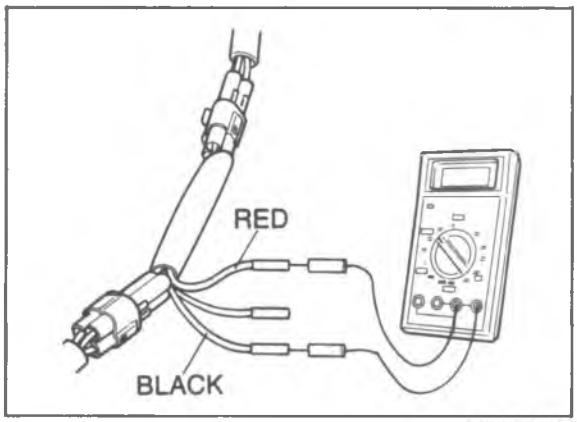

86U04A-189

6. Measure **RED** wire voltage and record it.

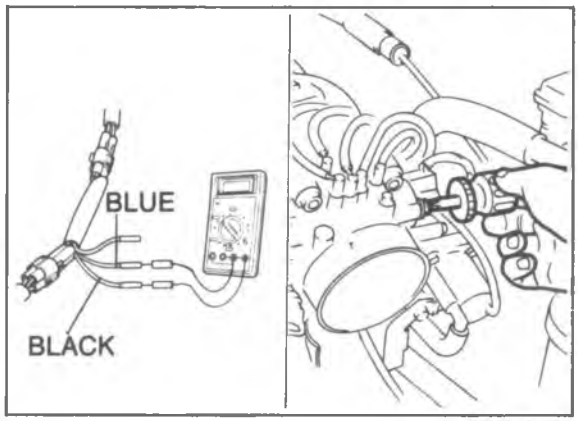

86U04A-190

7. Change the voltmeter connection to the **BLUE** wire.
8. Loosen the throttle sensor mounting screws.

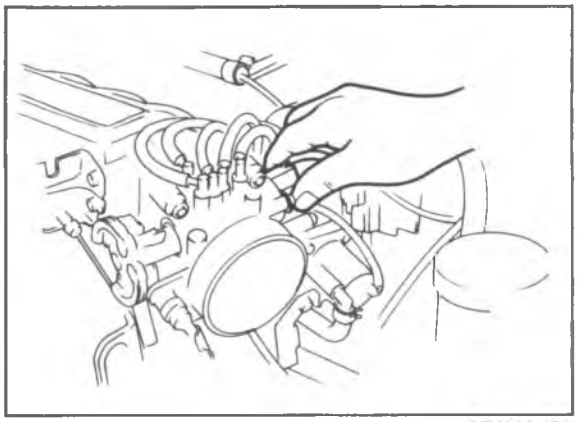

86U04A-191

9. Turn the throttle sensor to adjust **BLUE** wire voltage within the range specified for the recorded **RED** wire voltage.

Specification:

RED wire voltage (V)	BLUE wire voltage (V)	RED wire voltage (V)	BLUE wire voltage (V)
4.50—4.59	0.37—0.54	5.10—5.19	0.42—0.61
4.60—4.69	0.38—0.55	5.20—5.29	0.43—0.62
4.70—4.79	0.39—0.56	5.30—5.39	0.44—0.63
4.80—4.89	0.40—0.57	5.40—5.49	0.44—0.64
4.90—4.99	0.40—0.58	5.50	0.44—0.66
5.00—5.09	0.41—0.60		

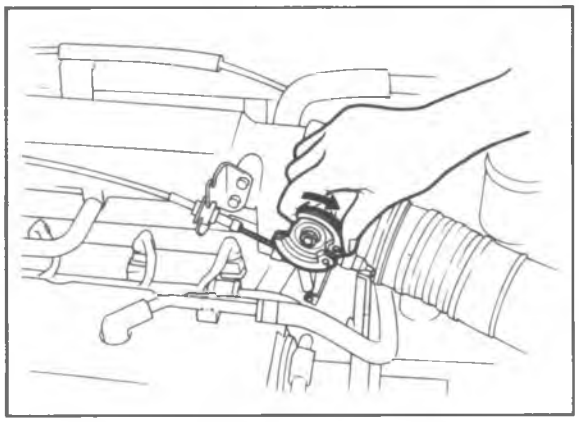

86U04A-192

10. Tighten the throttle sensor mounting screws.
11. Recheck that **BLUE** wire voltage is within specification.
12. Hold the throttle valve fully open.

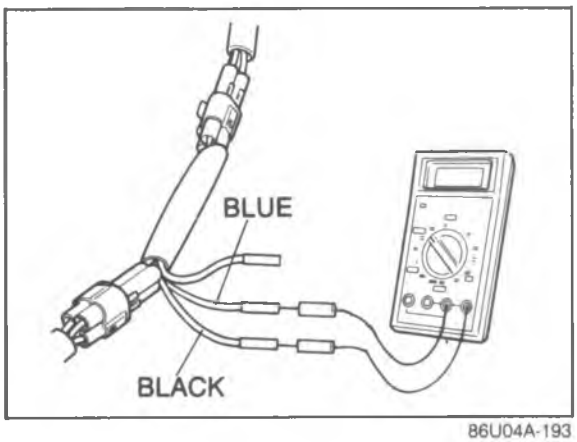

86U04A-193

13. Check that **BLUE** wire voltage is within specification.

Specification:

RED wire voltage (V)	BLUE wire voltage (V)	RED wire voltage (V)	BLUE wire voltage (V)
4.50—4.59	3.58—4.23	5.10—5.19	4.05—4.79
4.60—4.69	3.66—4.32	5.20—5.29	4.13—4.88
4.70—4.79	3.74—4.41	5.30—5.39	4.21—4.98
4.80—4.89	3.82—4.51	5.40—5.49	4.29—5.07
4.90—4.99	3.90—4.60	5.50	4.29—5.17
5.00—5.09	3.97—4.70		

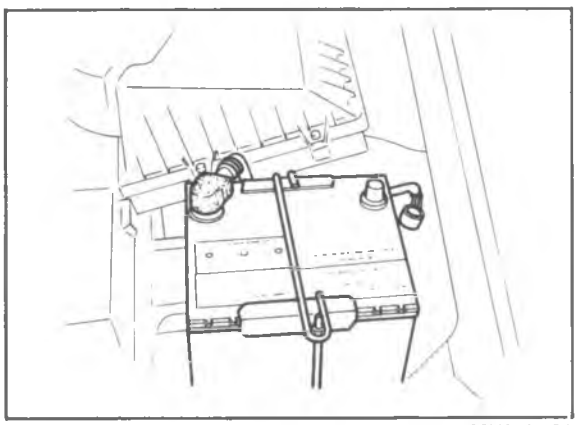

86U04A-194

14. If not correct, replace the throttle sensor.
15. Turn the ignition OFF.
16. Disconnect the **SST** and reconnect the throttle sensor connector.
17. Disconnect the negative battery terminal and depress the brake pedal for at least 5 seconds to eliminate the control unit malfunction memory.

Throttle valve fully closed position (Example)

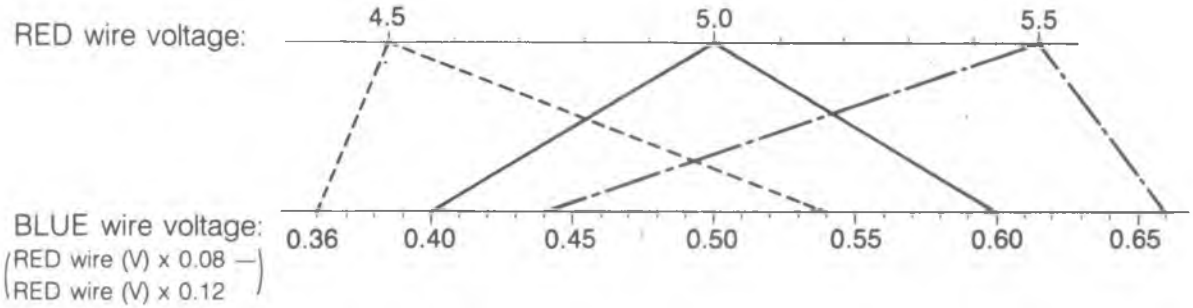

Throttle valve fully open position (Example)

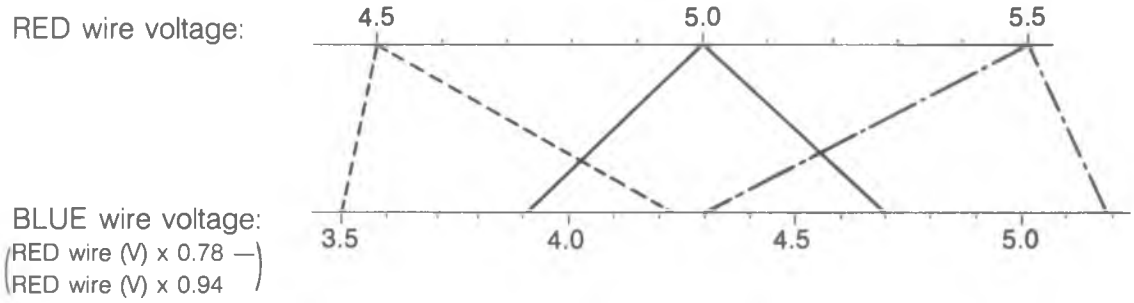

Inspection Steps

Step 1: Throttle valve fully closed position

① Measure RED wire voltage.
② Record RED wire voltage.
③ Measure BLUE wire voltage
④ Verify that BLUE wire voltage is within the specified range.

Step 2: Throttle valve fully open position

③ Measure BLUE wire voltage.
⑥ Verify that BLUE wire voltage is within the specified range.

Adjustment

If BLUE wire voltage measured in step 1 exceeds the specific range, adjust or replace the throttle sensor.

86U04A-195

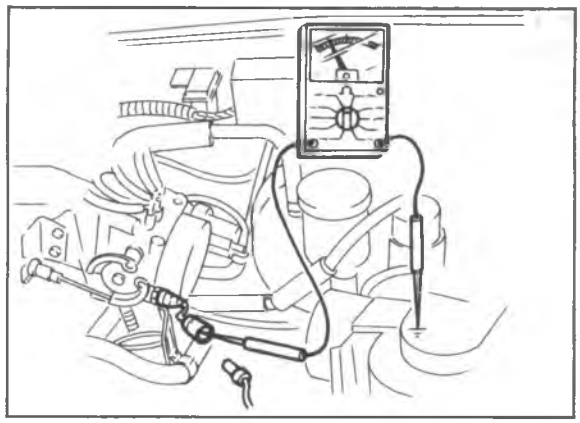

86U04A-196

IDLE SWITCH

Inspection

1. Disconnect the idle switch connector (1-pin).
2. Check continuity between the switch and ground.

Throttle valve condition	Continuity
Fully closed	Yes
Open	No

3. If not correct, check condition of wiring harness of the idle switch. Replace the idle switch and throttle body as an assembly, if necessary.

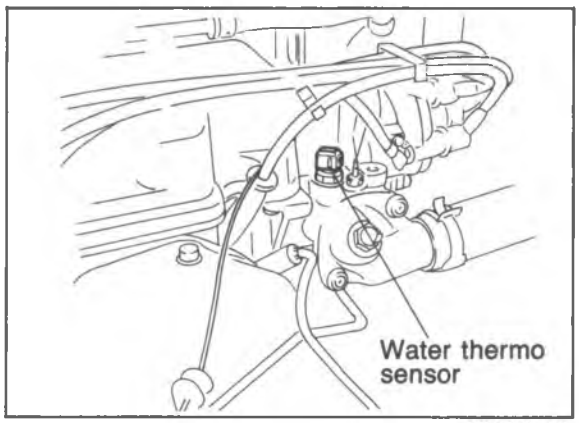

86U04A-202

WATER THERMO SENSOR

Inspection

1. Remove the water thermo sensor from the cylinder head.

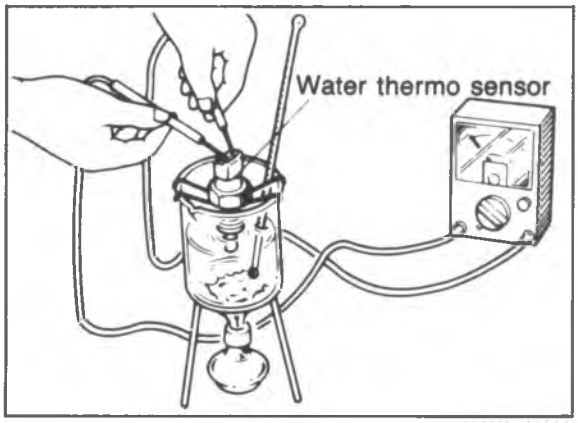

86U04A-203

2. Place the sensor in water with a thermometer and heat the water gradually.
3. Check resistance of the sensor with an ohmmeter.

Coolant	Resistance
–20°C (–4°F)	14.5—17.8 kΩ
20°C (68°F)	2.2—2.7 kΩ
40°C (104°F)	1.0—1.3 kΩ
60°C (140°F)	500—640 Ω
80°C (176°F)	280—350 Ω

4. If not correct, replace the water thermo sensor.

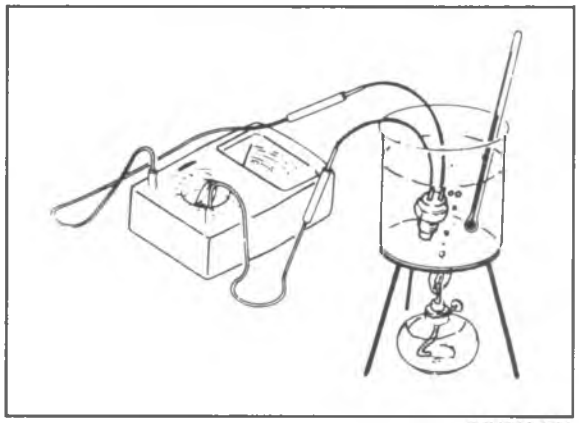

86U04A-204

WATER THERMO SWITCH

Inspection

1. Remove the switch from the radiator.
2. Place the switch in water with a thermometer and heater the water gradually.
3. Check for continuity of the switch with an ohmmeter.

Coolant temp.	Continuity
More than approx. 17°C (63°F)	Yes
Less than approx. 17°C (63°F)	No

4. If not correct, replace the water thermo switch.

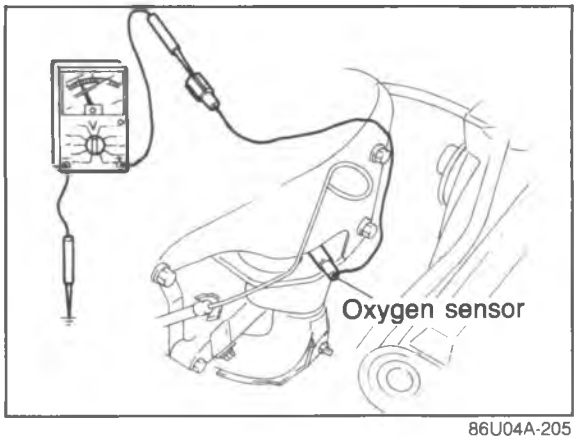

86U04A-205

OXYGEN SENSOR

Inspection of Output Voltage

1. Warm up the engine and run it at idle.
2. Disconnect the oxygen sensor connector.
3. Connect a voltmeter between the oxygen sensor and ground.
4. Run the engine at **4,500 rpm** until the voltmeter indicates **approx. 0.7V**.

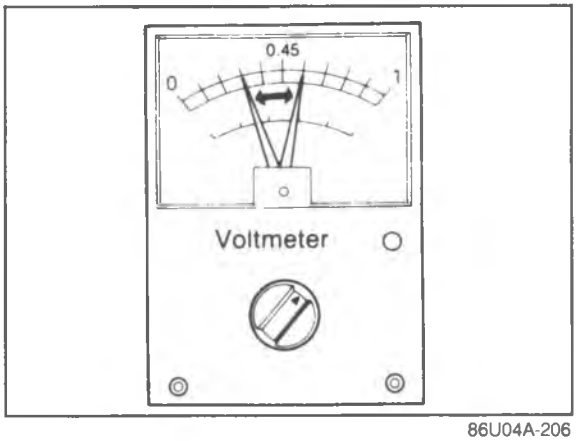

86U04A-206

5. Increase and decrease the engine speed suddenly several times. Check to see that when the speed is increased the meter reads between **0.5V—1.0V**, and when the speed is decreased it reads between **0V—0.4V**.
6. If the voltmeter dosen't indicate as specified, replace the oxygen sensor.

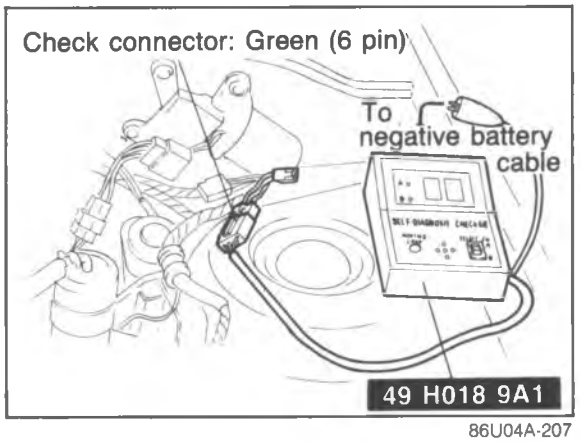

86U04A-207

Inspection of Sensitivity

1. Warm up the engine to the normal operating temperature and run it at idle.
2. Connect the **SST** to the check connector.

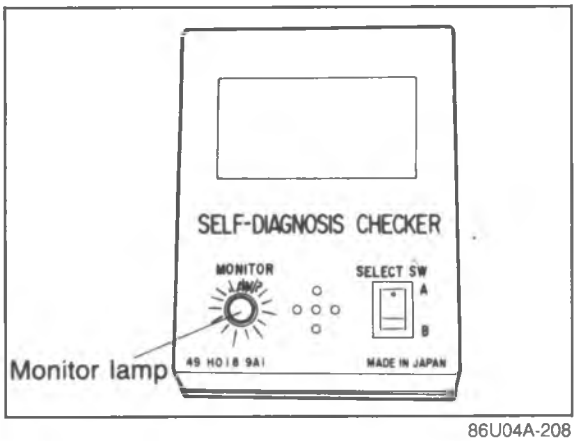

86U04A-208

3. Increase the engine speed to between **2,000 and 3,000 rpm**, and check that the monitor lamp flashes for 10 seconds.

Monitor lamp: Flashes ON and OFF more than 8 times/10 sec

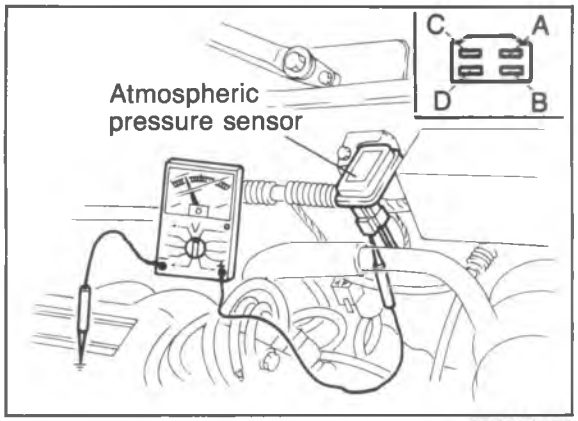

67U04X-154

ATMOSPHERIC PRESSURE SENSOR

Inspection

1. Connect a voltmeter to the atmospheric pressure sensor (D) terminal.
2. Turn the ignition switch on and take a voltage reading.

   Voltage: 3.5—4.5V at sea level
   2.5—3.5V at high altitude
   [2,000m (6,500 ft)]

3. Replace the sensor if necessary.

FUEL AND EMISSION CONTROL SYSTEMS (TURBO)

OUTLINE ..... 4B— 2
SYSTEM DIAGRAM ..... 4B— 2
COMPONENT LOCATION ..... 4B— 3
VACUUM HOSE ROUTING DIAGRAM ..... 4B— 6
SPECIFICATIONS ..... 4B— 7
TROUBLESHOOTING GUIDE ..... 4B— 8
TROUBLESHOOTING WITH SST .. 4B— 10
INSPECTION PROCEDURE ..... 4B— 11
AFTER-REPAIR PROCEDURE ..... 4B— 11
PRINCIPLE OF CODE CYCLE ..... 4B— 13
CODE NUMBER ..... 4B— 14
SWITCH MONITOR FUNCTION ..... 4B— 32
INSPECTION PROCEDURE ..... 4B— 33
IDLE ADJUSTMENT ..... 4B— 36
IDLE SPEED ..... 4B— 36
IDLE MIXTURE ..... 4B— 37
INTAKE AIR SYSTEM ..... 4B— 38
COMPONENT DESCRIPTIONS ..... 4B— 38
REMOVAL ..... 4B— 39
PARTS INSPECTION ..... 4B— 40
REPLACEMENT ..... 4B— 42
INSTALLATION ..... 4B— 43
IDLE SPEED CONTROL (ISC) SYSTEM ..... 4B— 45
COMPONENT DESCRIPTIONS ..... 4B— 46
TROUBLESHOOTING ..... 4B— 47
TURBOCHARGING SYSTEM ..... 4B— 50
COMPONENT DESCRIPTIONS ..... 4B— 50
TROUBLESHOOTING ..... 4B— 51
OPERATION NOTE ..... 4B— 51
SERVICE NOTE ..... 4B— 51
TURBOCHARGER BOOST PRESSURE ..... 4B— 52
WASTE GATE ..... 4B— 52
AIR BYPASS VALVE ..... 4B— 52
INTERCOOLER ..... 4B— 52
OVERBOOST WARNING ..... 4B— 53
TURBOCHARGER ..... 4B— 53
FUEL SYSTEM ..... 4B— 57
COMPONENT DESCRIPTIONS ..... 4B— 58
TROUBLESHOOTING ..... 4B— 59
FUEL PRESSURE RELEASE AND SERVICING FUEL SYSTEM ..... 4B— 60
MULTI-PRESSURE TESTER ..... 4B— 61
FUEL PRESSURE ..... 4B— 63
FUEL PUMP ..... 4B— 64
PULSATION DAMPER ..... 4B— 65
INJECTOR ..... 4B— 66
TRANSFER PUMP CONTROL SYSTEM (4 WHEEL STEERING). 4B— 68
PRESSURE REGULATOR CONTROL SYSTEM ..... 4B— 69
COMPONENT DESCRIPTIONS ..... 4B— 70
TROUBLESHOOTING ..... 4B— 71
REPLACEMENT ..... 4B— 73
FUEL TANK ..... 4B— 79
DECELERATION CONTROL SYSTEM ..... 4B— 82
COMPONENT DESCRIPTIONS ..... 4B— 83
TROUBLESHOOTING ..... 4B— 84
ELECTRONIC SPARK ADVANCE (ESA) CONTROL SYSTEM ..... 4B— 86
COMPONENT DESCRIPTIONS ..... 4B— 87
TROUBLESHOOTING ..... 4B— 88
EXHAUST GAS RECIRCULATION (EGR) SYSTEM ..... 4B— 90
COMPONENT DESCRIPTIONS ..... 4B— 91
TROUBLESHOOTING ..... 4B— 92
EVAPORATIVE EMISSION CONTROL (EEC) SYSTEM ..... 4B— 96
POSITIVE CRANKCASE VENTILATION (PCV) SYSTEM ..... 4B— 97
EXHAUST SYSTEM ..... 4B— 98
CONTROL SYSTEM ..... 4B— 99
RELATIONSHIP CHART ..... 4B—100
EGI MAIN FUSE ..... 4B—102
MAIN RELAY ..... 4B—102
CIRCUIT OPENING RELAY ..... 4B—102
ENGINE CONTROL UNIT ..... 4B—103
NEUTRAL SWITCH ..... 4B—108
CLUTCH SWITCH ..... 4B—108
BRAKE LIGHT SWITCH ..... 4B—108
P/S PRESSURE SWITCH ..... 4B—109
INHIBITOR SWITCH ..... 4B—109
E/L CONTROL UNIT ..... 4B—110
AIR FLOW METER ..... 4B—111
THROTTLE SENSOR ..... 4B—112
IDLE SWITCH ..... 4B—116
WATER THERMO SENSOR ..... 4B—116
WATER THERMO SWITCH ..... 4B—116
OXYGEN SENSOR ..... 4B—117
ATMOSPHERIC PRESSURE SENSOR ..... 4B—118

86U04B-001

OUTLINE

SYSTEM DIAGRAM

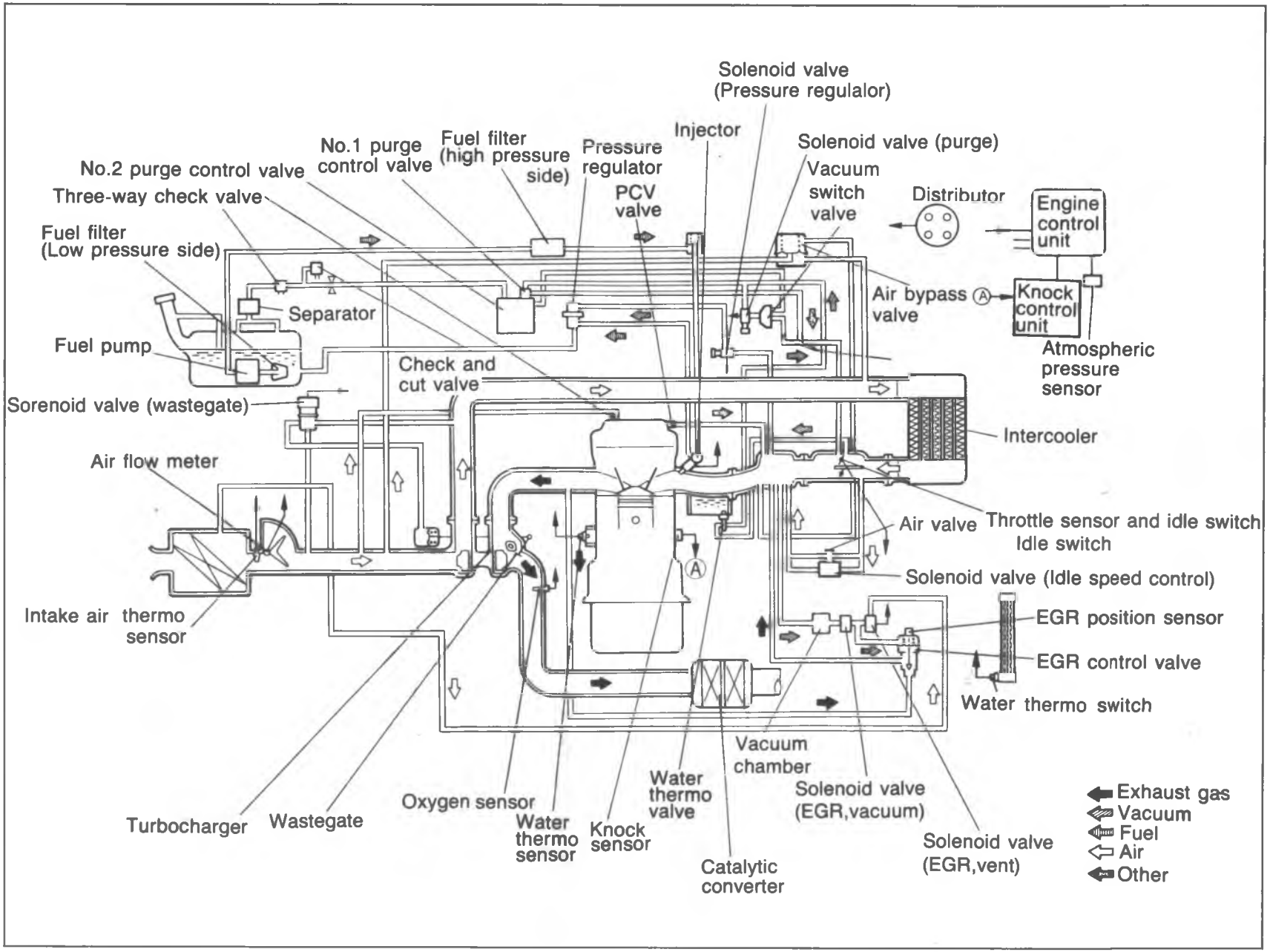

86U04A-002

COMPONENT LOCATION
Input Devices

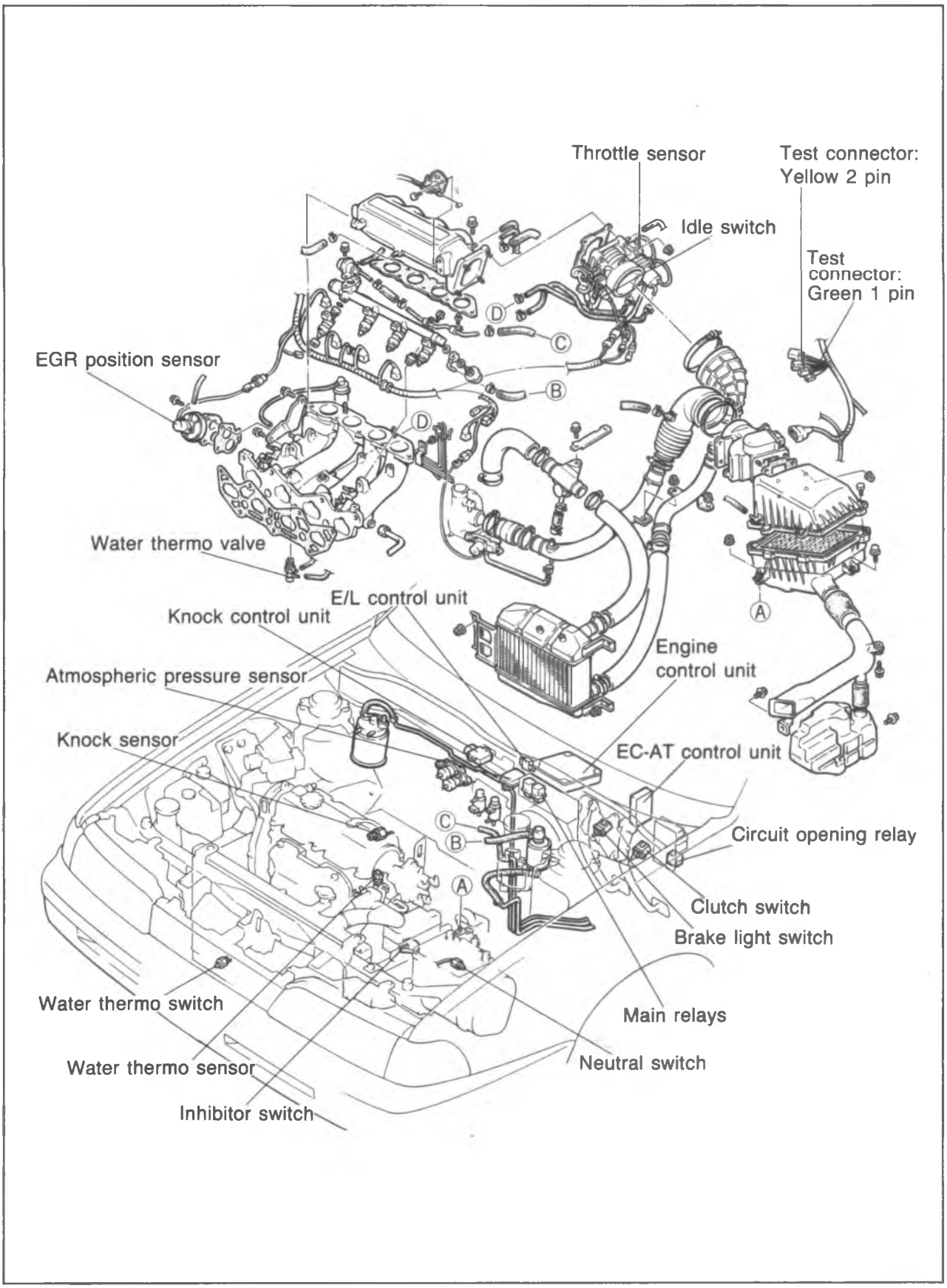

86U04A-003

Fuel and Output Devices

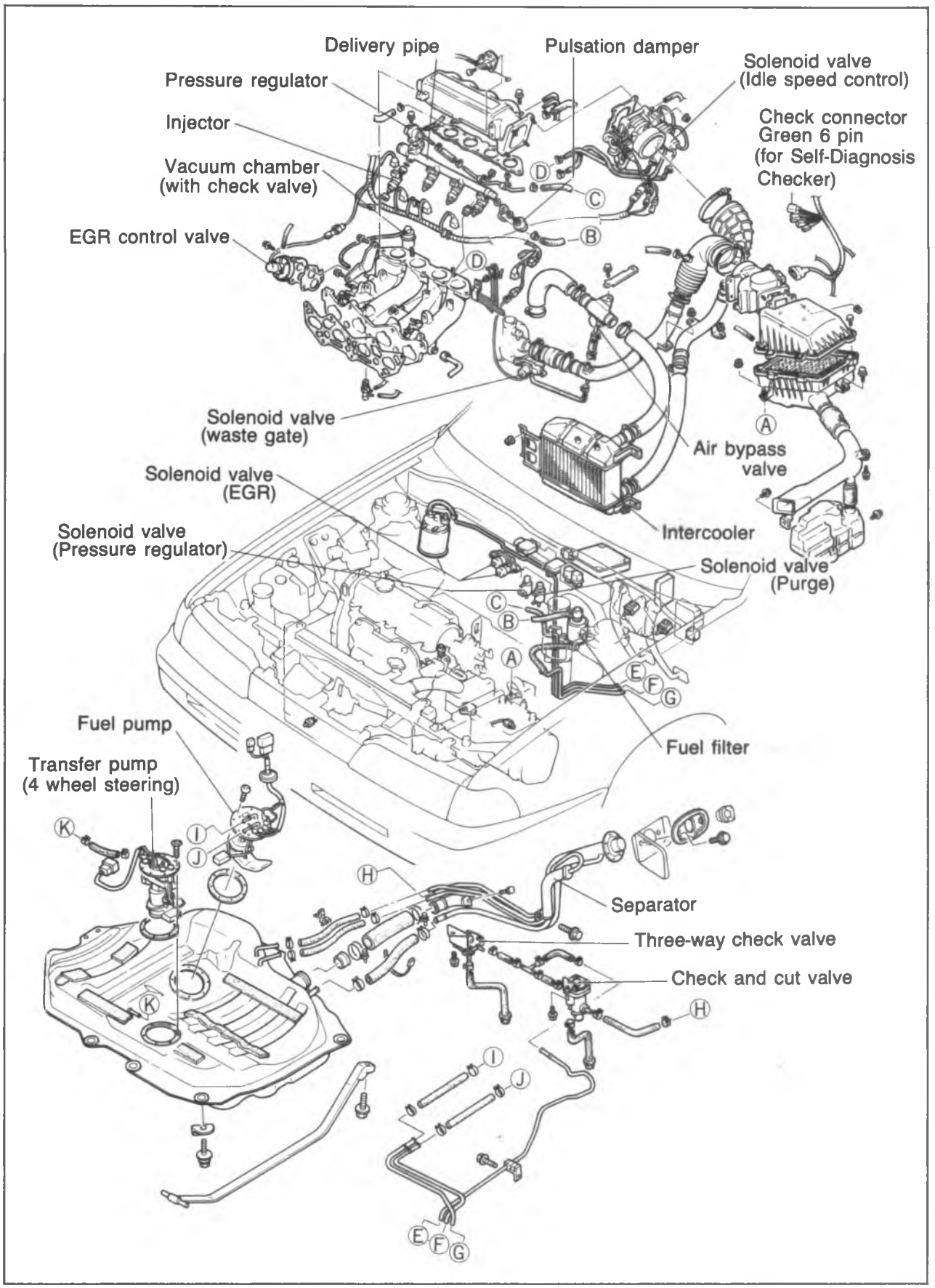

86U04A-004

Exhaust System

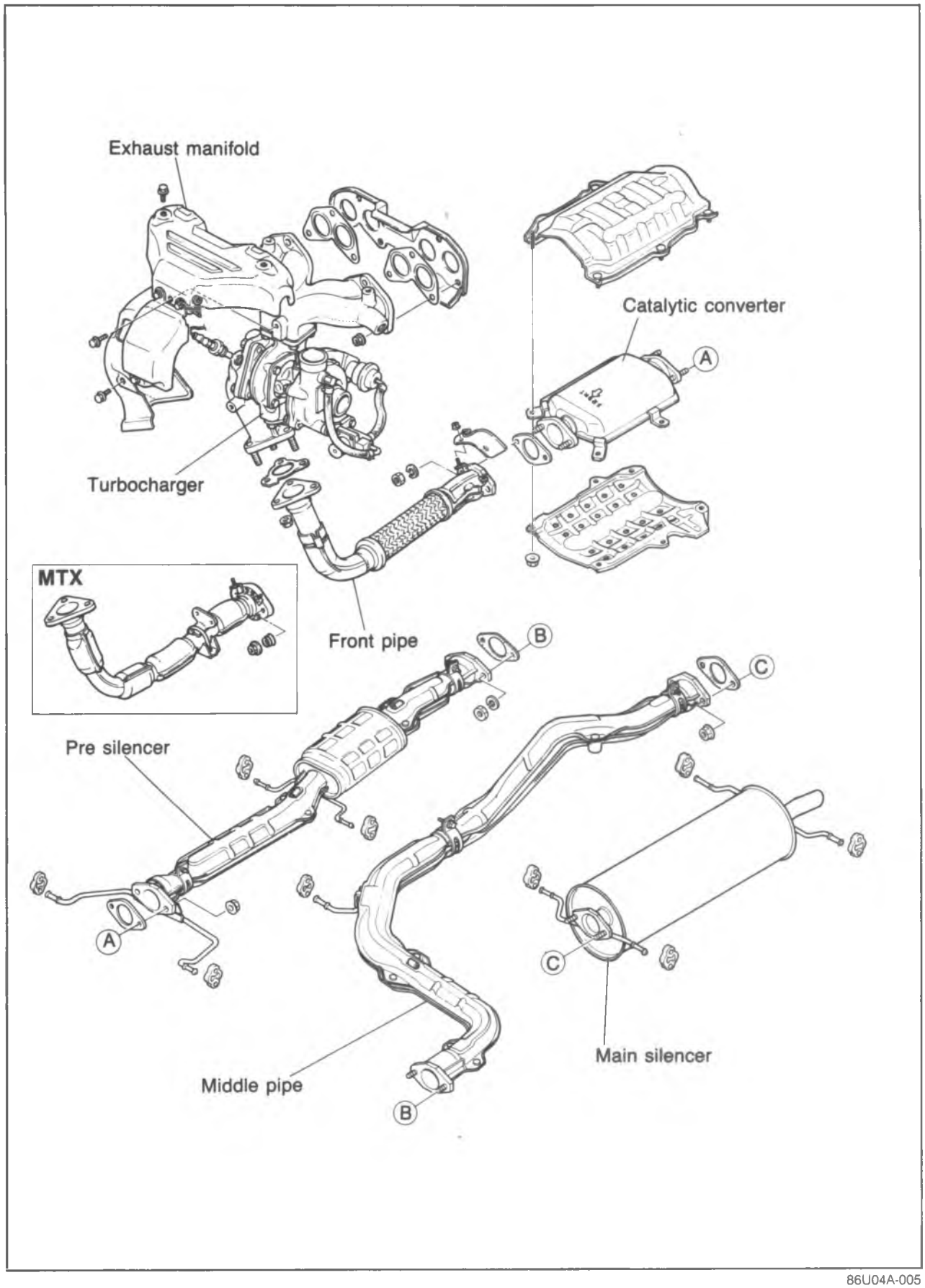

86U04A-005

VACUUM HOSE ROUTING DIAGRAM

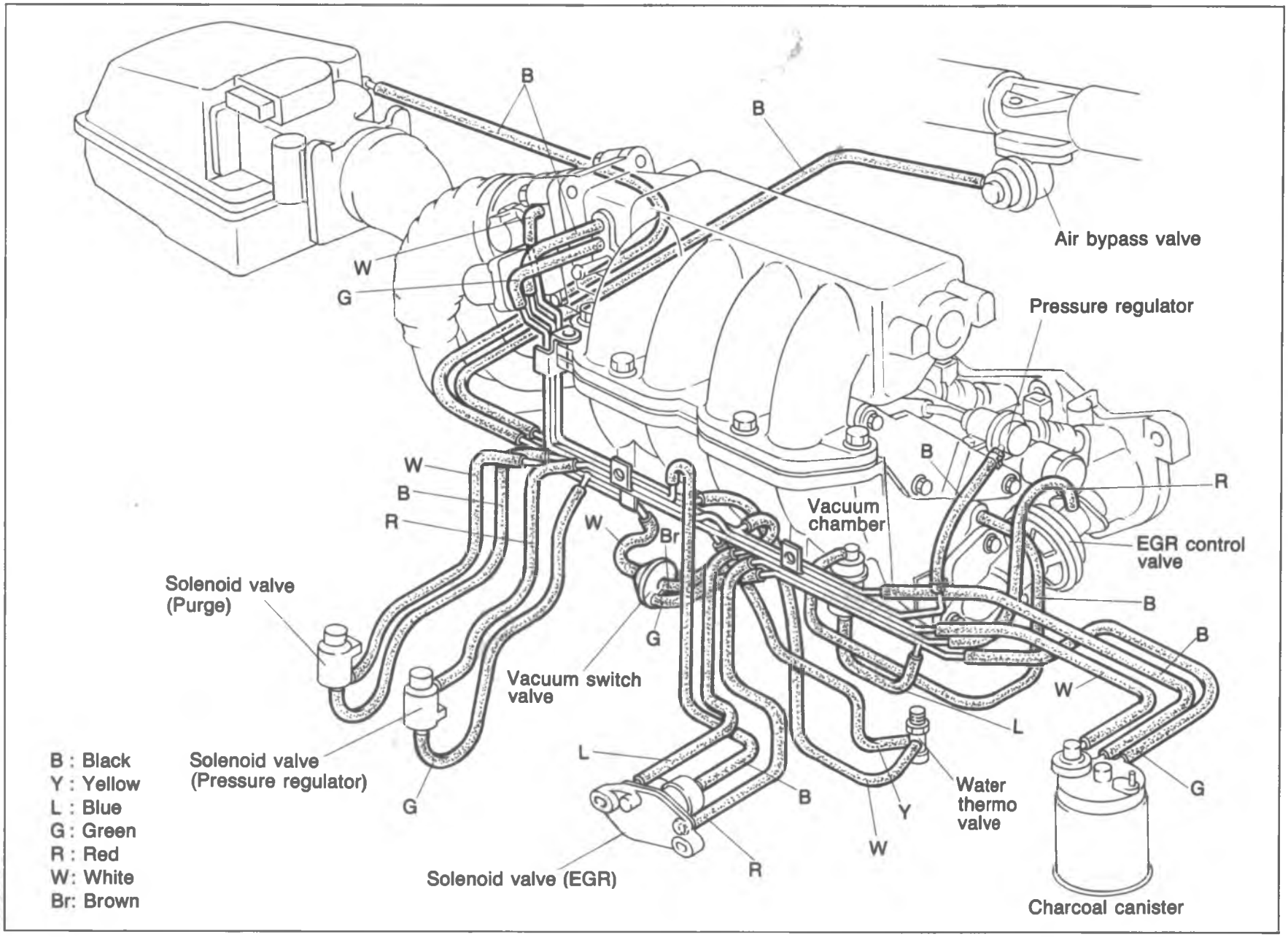

SPECIFICATIONS

Item / Engine type			Turbo Engine
Idle speed	rpm		750 ± 25 (ATX: P range)*
Throttle body			
Type			Horizontal draft (2-barrel)
Throat diameter	mm (in)	No. 1	MTX: 40 (1.6), ATX: 46 (1.8)
		No. 2	MTX: 46 (1.8), ATX: 40 (1.6)
Air flow meter			
Resistor	Ω	E2—VS	Fully closed: 20—400 Fully open: 20—1,000
		E2—VC	100—400
		E2—VB	200—400
		E2—THA	−20°C (−4°F) 13,600—18,400 20°C (68°F) 2,210— 2,690 60°C (140°F) 493— 667
Fuel pump			
Type			Impeller (in tank)
Output pressure	kPa (kg/cm², psi)		Main pump: 441—588 (4.5—6.0, 64—85) Transfer pump: 39 (0.4, 5.7) max.
Feeding capacity	cc (cu in)/10 seconds		Main pump: 220 (13.4) min. Transfer pump: 190 (11.6) min.
Fuel filter			
Type		Low pressure side	Nylon element
		High pressure side	Paper element
Pressure regulator			
Type			Diaphragm
Regulating pressure	kPa (kg/cm², psi)		235—275 (2.4—2.8, 34—40)
Injector			
Type			High-ohmic
Type of drive			Voltage
Resistance	Ω		11—15
Injection amount	cc (cu in)/15 seconds		73—90 (4.45—5.49)
Idle speed control valve			
Solenoid resistance	Ω		6.3—9.9
Turbocharger			
Cooling method			Engine coolant
Lubrication method			Engine oil
Boost pressure (Maximum)	kPa (kg/cm², psi)		60 (0.61, 8.7): Solenoid duty value 100% 45 (0.46, 6.5): Solenoid duty value 0%
Fuel tank			
Capacity	liters (US gal, Imp gal)		60 (15.9, 13.2), 57 (15.0, 12.5): 4-wheel steering vehicle
Air cleaner			
Element type			Oil permeated
Fuel			
Specification			Unleaded premium (Unleaded regular)

* With test connector grounded

86U04B-002

TROUBLESHOOTING GUIDE

This troubleshooting guide shows the malfunction numbers and the symptoms of various failures. Perform troubleshooting as described below.

Symptom \ Possible cause			Input sensors and switches													Output solenoid valves					
			Ignition pulse	Distributor (Ne signal)	Distributor (G1 signal)	Distributor (G2 signal)	Knock sensor	Air flow meter	Weter thermo sensor	Intake air thermo sensor	Throttle sensor	Atmospheric pressure sensor	Oxygen sensor	EGR position sensor	Feedback system	Solenoid valve (Pressure regulator)	Solenoid valve (Purge)	Solenoid valve (EGR, vacuum side)	Solenoid valve (EGR, vent side)	Solenoid valve (Idle speed control)	Solenoid valve (Waste gate)
Page			4B-16	4B-17	4B-18	4B-19	4B-20	4B-21	4B-22	4B-23	4B-24	4B-25	4B-26	4B-27	4B-28	4B-29	4B-29	4B-30	4B-30	4B-31	4B-31
1	Fault indicated by SST Code No.		01	02	03	04	05	08	09	10	12	14	15	16	17	25	26	28	29	34	42
2	Hard start or won't start (Cranks OK)																				
3	Engine stalls	While warming up																			
		After warming up																			
4	Rough idle	While warming up																			
		After warming up																			
5	High idle speed after warming up																				
6	Poor acceleration, hesitation or lack of power																				
7	Runs rough on deceleration																				
8	Afterburn in exhaust system																				
9	Poor fuel consumption																				
10	Excessive oil consumption																				
11	Engine stalls or rough after hot starting																				
12	Knocking																				
13	Abnormal noise or vibration																				
14	Fails emission test																				

TROUBLESHOOTING PROCEDURE

Note
Step 1 under symptom is to quickly determine what system or unit may be at fault by use of the SST. (Self-Diagnosis Checker 49 H018 9A1)

1st: Check input sensors and output solenoid valves with the **SST**. (Refer to page 4B—11.)

2nd: Check other switches with the **SST**. (Refer to page 4B—33.)

3rd: Check the following items:

Electrical system
1) Battery condition
2) Fuses

Ignition system
1) Ignition spark
2) Ignition timing (with test connector grounded)

Fuel system
1) Fuel level
2) Fuel leakage
3) Fuel filter
4) Idle speed (with test connector grounded)

Intake air system
1) Air cleaner element
2) Vacuum or air leakage
3) Vacuum hose routing
4) Accelerator cable

Engine
1) Compression
2) Overheating

Others
1) Clutch slippage
2) Brake dragging

4th: Check Fuel and Emission Control Systems. (Refer to page 4B—9.)

86U04B-003

The Troubleshooting Guide lists the systems most likely to cause a given symptom. After finding systerns to check, refer to the pages shown for detailed guides for each system.

Possible cause		Fuel and Emission Control Systems										
		Intake Air System (Poor connection of components, throttle body)	Fuel System (Fuel injection, Fuel pressure)	Pressure Regulator Control System	Idle Speed Control (ISC) System (Air valve, Idle speed control solenoid malfunction)	Turbocharging System (Oil & water passage, Turbine and compressor wheels malfunction)	Electronic Spark Advance (ESA) System (Knock control system)	EGR System (EGR control valve stuck and open)	EEC System (Vacuum switch valve, No.1 purge valve walfunction)	PCV System (System clogged)	Deceleration System (Fuel cut operation malfunction)	Exhaust System (System clogged)
Page		4B—38	4B—57	4B—69	4B—45	4B—50	4B—86	4B—90	4A—73	4A—79	4B—82	4A—80
Symptom	2	3	2				1					
	3	4	3		1			2				
		5	4		2			3		1		
	4	5	4		1			3		2		
		6	5		2			3	4	1		
	5	2			1							
	6	3	4			6		1	2			5
	7		3		2						1	
	8	3	4		1						2	
	9		2					3			1	4
	10					1						
	11		2	1								
	12					2	1					
	13					1						
	14	6	7		4			2	5		3	1

86U04B-004

The numbers of the list shown the priorities of inspections from the most possible to that with the lowest possibility.
These were determined on the following basis:

- Ease of inspection
- Most possible system
- Most possible point in system

TROUBLESHOOTING WITH SST

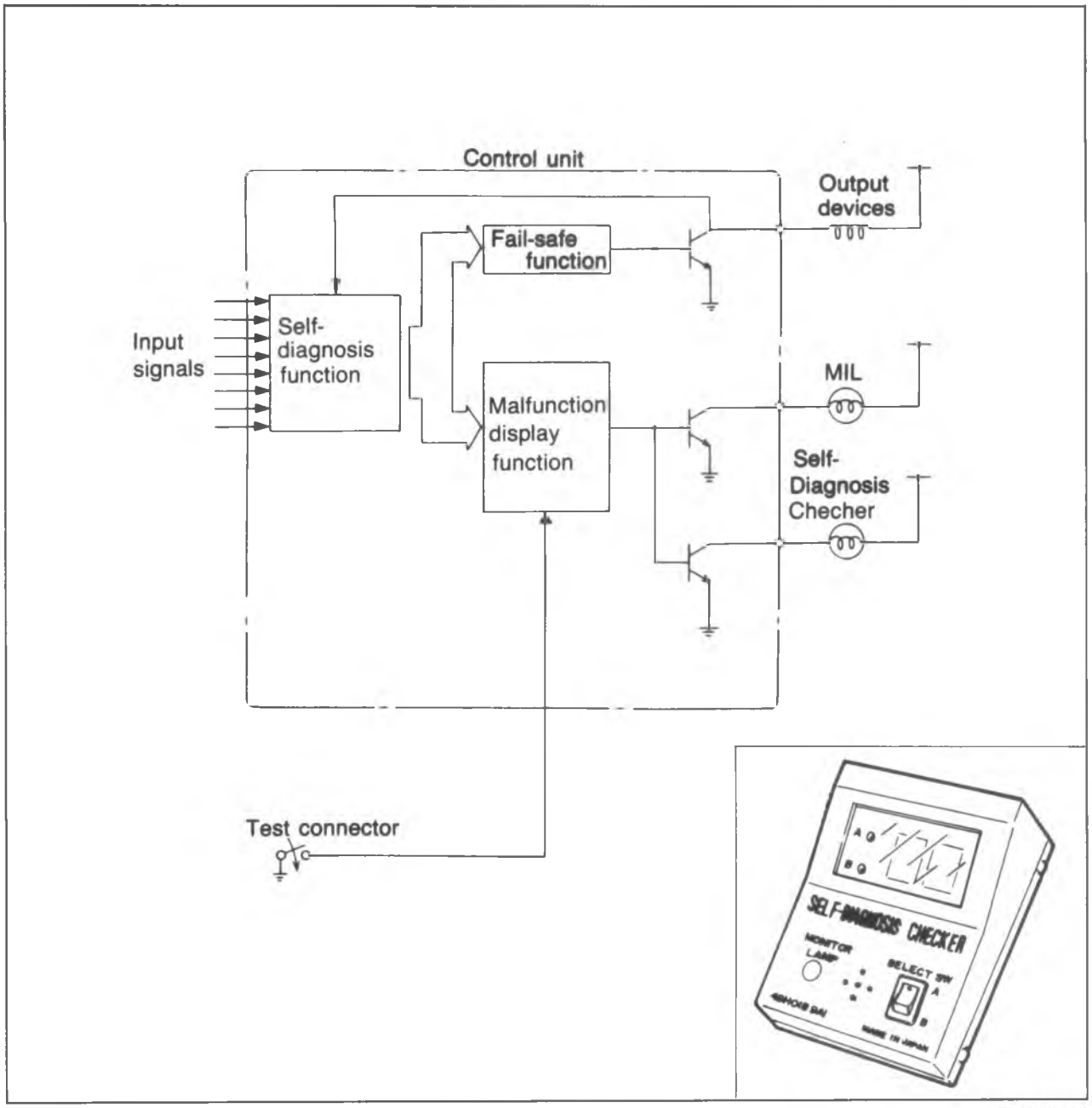

86U04A-010

When troubles occur in the main input devices or output devices, check for the cause using the **SST**. Failures of each input and output device are indicated and retrieved from the control unit as malfunction code numbers.

Note
The control unit constantly checks for malfunction of the input devices. But, the control unit checks for malfunction of output devices only in a 3 second period after the ignition switch is turned ON and the test connector is grounded.

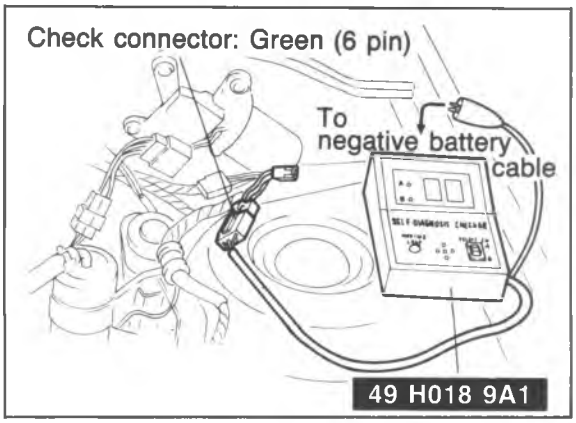

86U04A-011

INSPECTION PROCEDURE

1. Connect the **SST** to the check connector. (Green, 6-pin) and the negative battery terminal.
2. Set the select switch to position A.

Note
The check connector is located at the rear of the left side wheel housing.

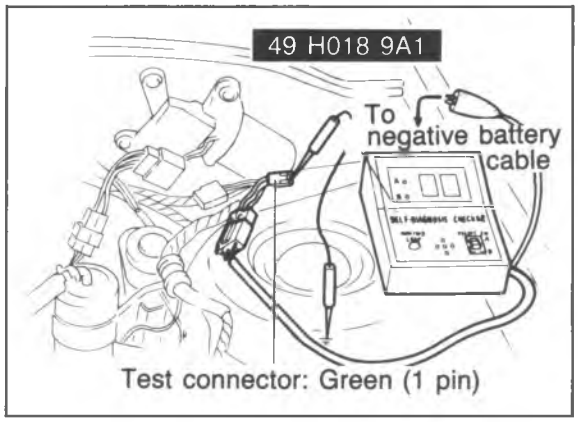

86U04A-012

3. Ground the test connector (Green, 1-pin) with a jumper wire.

Note
The test connector is located near the Self-Diagnosis Checker check connector.

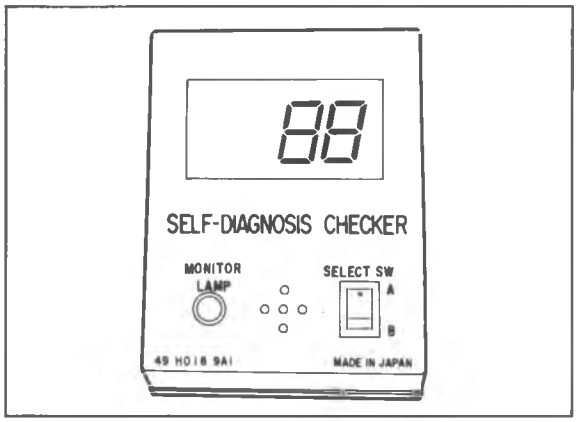

86U04B-151

4. Turn the ignition switch ON.
5. Verify that **88** flashes on the digital display and that the buzzer sounds for **three seconds** after turning the ignition switch ON.
6. If **88** does not flash, check the main relay (Refer to page 4B—102), power supply circuit, and check connector wiring.
7. If **88** flashes and the buzzer sounds continuously for more than **20 seconds**, replace the engine control unit and perform steps 3 and 4 again.
8. Note the code numbers and check for the causes by referring to the check sequences shown on pages **from 4B—16 to 4B—31**. Repair as necessary.

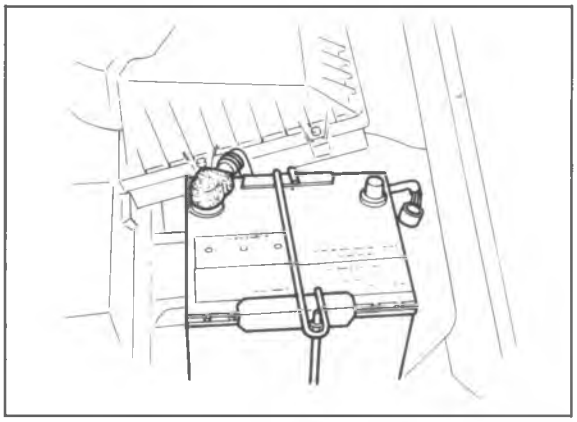
86U04A-014

Note
Cancel the code numbers by performing the after-repair procedure after repairing.

AFTER-REPAIR PROCEDURE

1. Cancel the memory of malfunctions by disconnecting the negative battery cable and depressing the brake pedal for **at least five seconds**; then reconnect the negative battery cable.

PRINCIPLE OF CODE CYCLE

Malfunction codes are determined as shown below

86U04A-017

1. Code cycle break
The time between malfunction code cycles is 4.0 sec (the time the light is off).

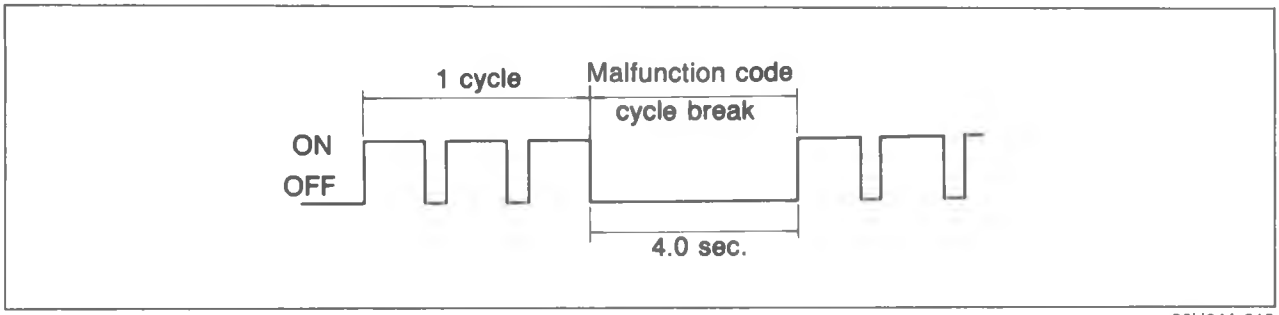

86U04A-018

2. Second digit of malfunction code (ones position)
The digit in the ones position of the malfunction code represents the number of times the buzzer is on 0.4 sec during one cycle.

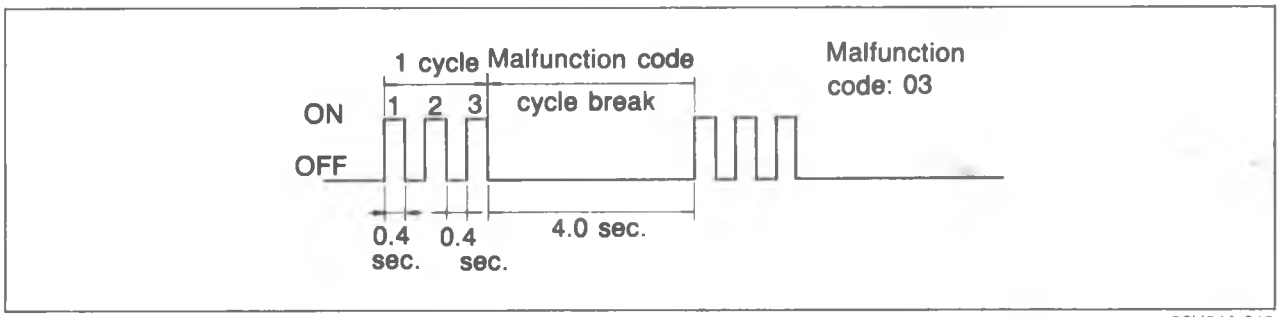

86U04A-019

3. First digit of malfunction code (tens position)
The digit in the tens position of the malfunction code represents the number of times the buzzer is on 1.2 sec during one cycle.

It should also be noted that the light goes off for 1.6 sec. between the long and short pulses of the buzzer.

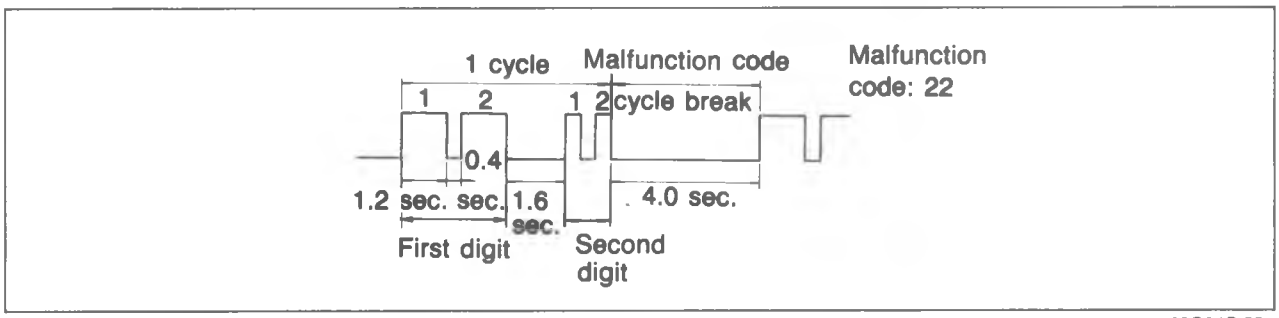

69G04C-554

CODE NUMBER

Malfunction display		Sensor or subsystem	Self-diagnosis	Fail-safe
Malfunction code no.	MIL output signal pattern			
01	ON OFF	Ignition pulse	No ignition signal	—
02	ON OFF	Ne signal	No Ne signal from crank angle sensor	—
03	ON OFF	G_1 signal	No G_1 signal	Neither G_1 nor G_2 signal: Engine stopped
04	ON OFF	G_2 signal	No G_2 signal	
05	ON OFF	Knock sensor and knock control unit	Open or short circuit	• Retards ignition timing 6° in heavy-load condition • Waste gate opens earlier
08	ON OFF	Air flow meter	Open or short circuit	Maintains basic signal at preset value
09	ON OFF	Water thermo sensor	Open or short circuit	Maintains constant command • 35°C (95°F) for EGI • 50°C (122°F) for ISC control use
10	ON OFF	Intake air thermo sensor (air flow meter)	Open or short circuit	Maintains constant 20°C (68°F) command
12	ON OFF	Throttle sensor	Open or short circuit	Maintains constant command of throttle valve fully open
14	ON OFF	Atmospheric pressure sensor	Open or short circuit	Maintains constant command of sea level pressure
15	ON OFF	Oxygen sensor	Sensor output continues less than 0.55V 120 sec. after engine starts (1,500 rpm)	Cancels EGI feedback operation
16	ON OFF	EGR position sensor	Open or short circuit	Cuts off EGR
			Sensor output does not match target value (incorrect output)	—
17	ON OFF	Feedback system	Sensor output not changed 20 sec. after engine exceeds 1,500 rpm	Cancels EGI feedback operation

86U04B-005

Malfunction display		Sensor or subsystem	Self-diagnosis	Fail-safe
Malfunction code no.	MIL output signal pattern			
25	ON OFF	Solenoid valve (pressure regulator)	Open or short circuit	—
26	ON OFF	Solenoid valve (purge control)		—
28	ON OFF	Solenoid valve (EGR-vacuum)		—
29	ON OFF	Solenoid valve (EGR-vent)		—
34	ON OFF	Solenoid valve (Idle speed control)		—
42	ON OFF	Solenoid valve (waste gate)		—

86U04B-006

Caution

a) If there is more than one failure present, the lowest number malfunction code is displayed first, the remaining codes are displayed sequentially.

b) After repairing a failure, turn off the ignition switch and disconnect the negative battery cable and depress the brake pedal for at least 5 seconds to erase the memory of a malfunction code.

Code No. 01 (Ignition pulse) **PC: Possible Cause**

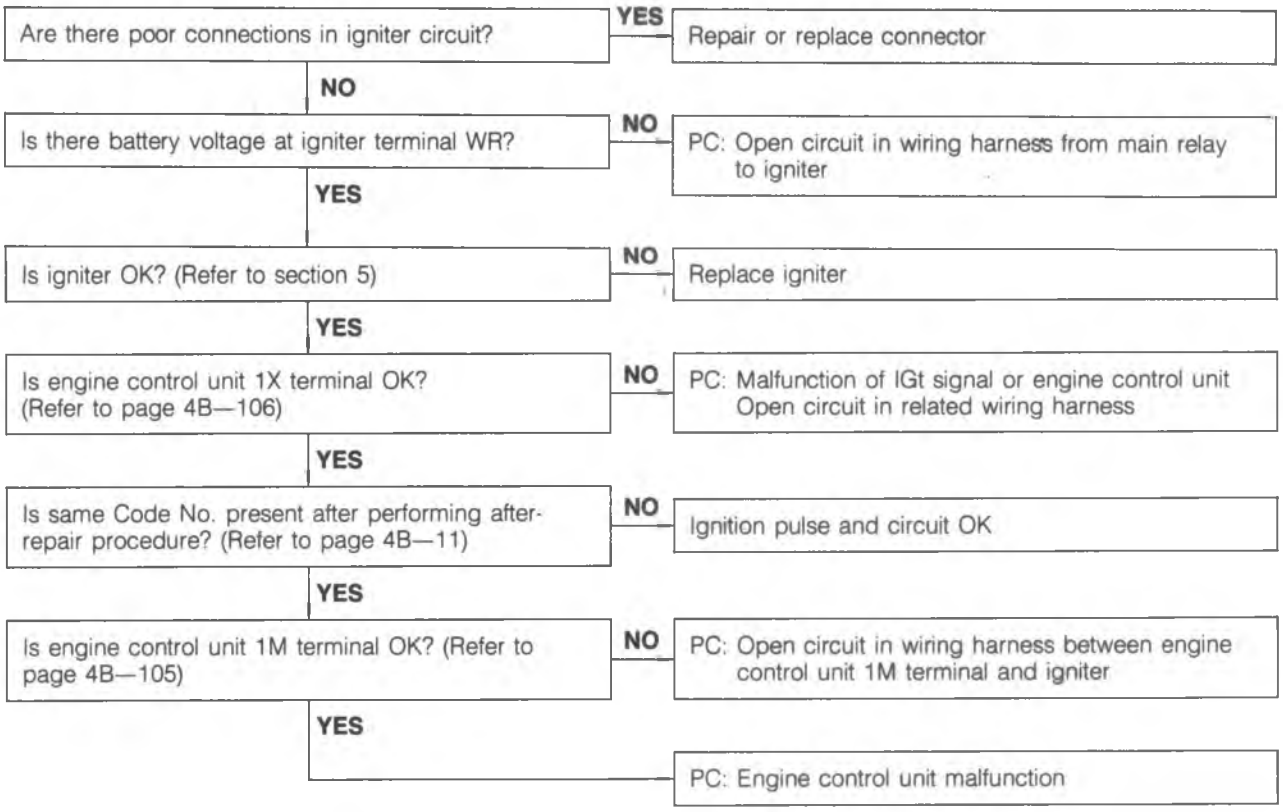

86U04B-007

Code No. 02 (Ne signal)

PC: Possible Cause

Are there poor connections in distributor circuit?
- **YES** → Repair or replace connector
- **NO** ↓

Is resistance between A and B terminal OK? (Refer to page 4B—88)
- **NO** → Relace distributor
- **YES** ↓

Is there continuity between distributor and engine control unit?

Distributor	Control unit
A	1T
B	1Q

- **NO** → PC: Open circuit in wiring harness from distributor to engine control unit
- **YES** ↓

Is same Code No. present after performing after-repair procedure? (Refer to page 4B—11)
- **NO** → Ne signal and circuit OK
- **YES** ↓

Are control unit 1T and 1Q terminal voltages OK?
- **NO** → PC: Open or short circuit in wiring harness
- **YES** → PC: Engine control unit malfunction

86U04B-008

Code No. 03 (G1 signal) **PC: Possible Cause**

Are there poor connections in distributor circuit?
- YES → Repair or replace connector
- NO ↓

Is resistance between E and F terminal OK? (Refer to page 4B—88)
- NO → Replace distributor
- YES ↓

Is there continuity between distributor and engine control unit?

Distributor	Control unit
E	1N
F	1P

- NO → PC: Open circuit in wiring harness from distributor to engine control unit
- YES ↓

Is same Code No. present after performing after-repair procedure? (Refer to page 4B—11)
- NO → G1 signal and circuit OK
- YES ↓

Are engine control unit 1N and 1P terminal voltages OK? (Refer to page 4B—105 and 4B—106)
- NO → PC: Short circuit in wiring harness
- YES → PC: Engine control unit malfunction

86U04B-009

Code No. 04 (G2 signal) **PC: Possible Cause**

Are there poor connections in distributor circuit?
- YES → Repair or replace connector
- NO ↓

Is resistance between C and D terminal OK? (Refer to page 4B—88)
- NO → Replace distributor
- YES ↓

Is there continuity between distributor and engine control unit?

Distributor	Control unit
C	1O
D	1P

- NO → PC: Open circuit in wiring harness from distributor to engine control unit
- YES ↓

Is same Code No. present after performing after-repair procedure? (Refer to page 4B—11)
- No → G2 signal and circuit OK
- YES ↓

Are engine control unit 1O and 1P terminal voltages OK? (Refer to page 4B—105 and 4B—106)
- NO → PC: Short circuit in wiring harness
- YES → PC: Engine control unit malfunction

86U04B-010

Code No. 05 (Knock sensor and Knock control unit)

PC: Possible Cause

Are there poor connections in relative circuit?

- **YES** → Repair or replace connector
- **NO** ↓

Are knock control unit terminal voltages correct?

Terminal	Voltage
RB wire	Approx. 12V
RY wire	3.3—5.0V
YL wire	
BLg wire	0V

- **NO (all wires)** → PC:
  - Open or short circuit in wiring harness between main relay and knock control unit
  - Open circuit in wiring harness between knock control unit and ground
- **(only RY wire)** → PC: Knock sensor, knock control unit, or related harness malfunction
- **(only YL wire)** → PC: Open circuit in wiring harness between knock control unit and knock sensor
- **YES** ↓

Is same Code No. present after performing after-repair procedure? (Refer tc page 4B—11)

- **NO** → Knock control unit, knock sensor, and circuit OK
- **YES** ↓

Is engine control unit 1R terminal voltage OK? (Refer to page 4B—106)

- **NO** → PC: Open or short circuit in wiring harness
  Knock control unit malfunction
- **YES** → PC: Engine control unit malfunction

86U04B-011

Code No. 08 (Air flow meter)

PC: Possible Cause

Are there poor connections in air flow meter circuit?

- **YES** → Repair or replace connector
- **NO** ↓

Is there continuity between air flow meter and engine control unit?

Air flow meter	Control unit
V_B (RB wire)	3I
V_C (RW wire)	2B
V_S (RB wire)	2E
E_2 (LgY wire)	2C

- **NO** → PC: Open circuit in wiring harness from air flow meter to engine control unit
- **YES** ↓

Is resistance of air flow meter OK?
Resistance:

Terminal	Fully closed (Ω)	Fully open (Ω)
$E_2 \leftrightarrow V_S$	20 ~ 400	20 ~ 1,000
$E_2 \leftrightarrow V_C$	100 ~ 400	
$E_2 \leftrightarrow V_B$	200 ~ 400	

- **NO** → Repair air flow meter
- **YES** ↓

Is same Code. No. present after performing after-repair procedure? (Refer to page 4B—11)

- **NO** → Air flow meter and circuit OK
- **YES** ↓

Are engine control unit terminal voltages OK?
Check terminal: 2B, 2C, 2E, 3I
(Refer to page 4B—106 and 107)

- **NO** → PC: Short circuit in wiring harness
- **YES** → PC: Engine control unit malfunction

86U04B-012

Code No. 09 (Water thermo sensor)

PC: Possible Cause

Are there poor connections at water thermo sensor circuit?

- **YES** → Repair or replace connector
- **NO** ↓

Is there continuity between water thermo sensor and control unit?

Water thermo sensor	Control unit
A (YB wire)	2I
B (LgY wire)	2C

- **NO** → PC: Open circuit in wiring harness from water thermo sensor to engine control unit
- **YES** ↓

Is resistance of the water thermo sensor OK?
Resistance:

Coolant temp	Resistance
–20°C (–4°F)	14.5 ~ 17.8 kΩ
20°C (68°F)	2.2 ~ 2.7 kΩ
40°C (104°F)	1.0 ~ 1.3 kΩ
60°C (140°F)	500 ~ 640 Ω
80°C (176°F)	280 ~ 350 Ω

- **NO** → Replace water thermo sensor
- **YES** ↓

Is same Code No. present after performing after-repair procedure? (Refer to page 4B—11)

- **NO** → Water thermo sensor and circuit OK
- **YES** ↓

Are engine control unit 2I and 2C terminal voltages OK? (Refer to page 4B—106)

- **NO** → PC: Engine short circuit in wiring harness
- **YES** → PC: Engine control unit malfunction

86U04B-013

Code No. 10 (Intake air thermo sensor)

PC: Possible Cause

Are there poor connections in air flow meter circuit?

- **YES** → Repair or replace connector
- **NO** ↓

Is there continuity between intake air thermo sensor (in air flow meter) and engine control unit?

Intake air temperature sensor (in air flow meter)	Control unit
THA(R wire)	2J
E_2 (LgY wire)	2C

- **NO** → PC: Open circuit in wiring harness from intake air thermo sensor (in air flow meter) to engine control unit
- **YES** ↓

Is resistance of intake air thermo sensor (in air flow meter) OK?
Resistance:

Terminal	Resistance
E_2 ↔ THA	−20°C (−4°F) : 13.6 ~ 18.4 kΩ 20°C (68°F) : 2.21 ~ 2.69 kΩ 60°C (140°F) : 493 ~ 667 Ω

- **NO** → Replace air flow meter
- **YES** ↓

Is same Code No. present after performing after-repair procedure? (Refer to page 4B—11)

- **NO** → Intake air thermo sensor and circuit OK
- **YES** ↓

Are engine control unit 2J and 2C terminal voltages OK? (Refer to page 4B—106)

- **NO** → PC: Short circuit in wiring harness
- **YES** → PC: Engine control unit malfunction

86U04B-014

Code No. 12 (Throttle sensor) **PC: Possible cause**

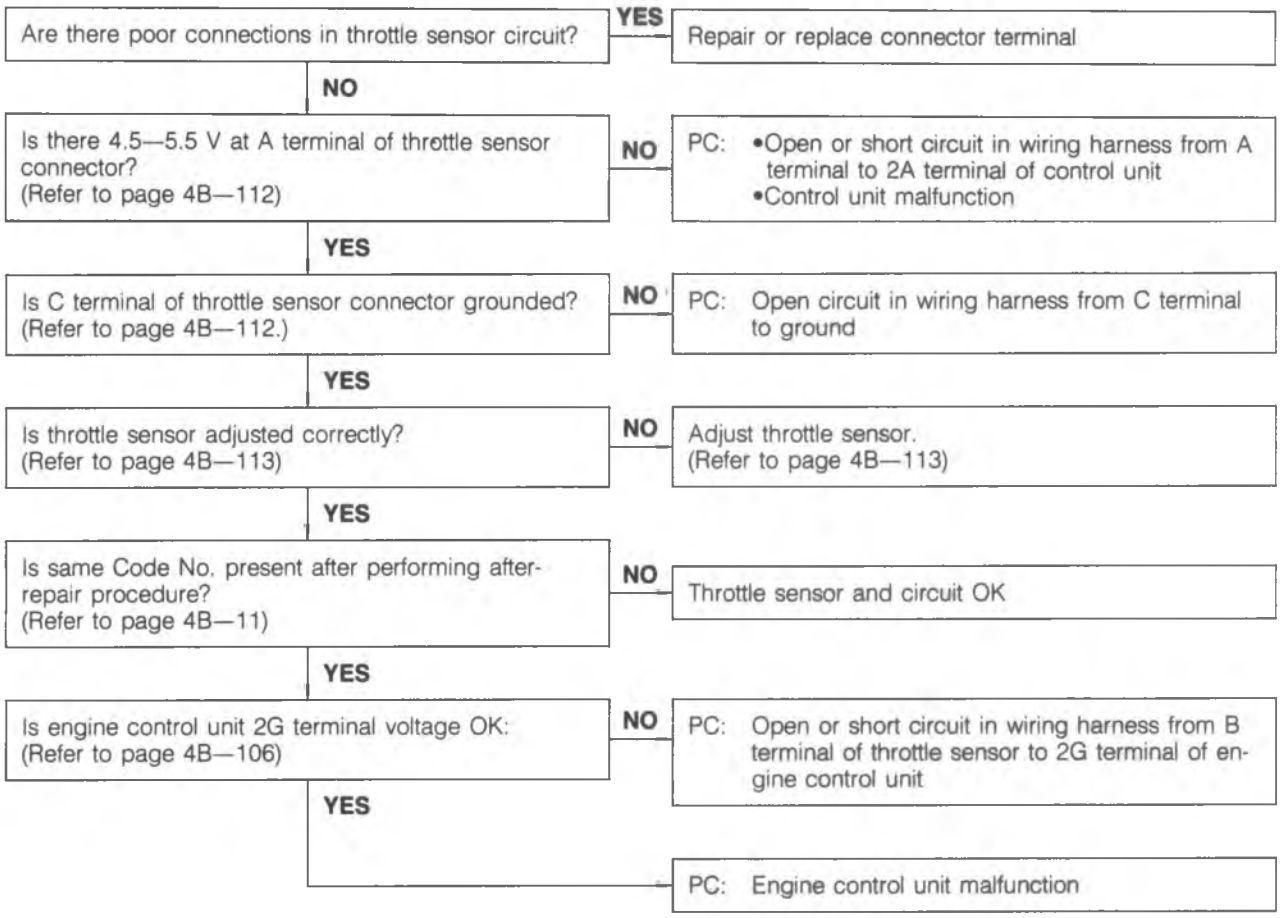

86U04B-015

Code No. 14 (Atmospheric pressure sensor)

PC: Possible cause

Are there poor connections in atmospheric pressure sensor circut?
- YES → Repair or replace connector
- NO ↓

Is there Vref at (LgR) wire of atmospheric pressure sensor connector?
Vref: 4.5—5.5V
- NO → PC: Open or short circuit in wiring harness from (LgR) wire to engine control unit
  - Engine control unit malfunction (If 2A terminal voltage not 4.5—5.5V)
- YES ↓

Is voltage at (Y) wire of atmospheric pressure sensor connector OK?
Voltage: 3.5—4.5V.....at sea level
2.5—3.5V.....at high altitude (2,000 m (6,500 ft))
- NO (0V) → PC: Short circuit in wiring harness from atmospheric pressure sensor (Y) wire to engine control unit (2H) terminal.
- NO (Others) → Replace atmospheric pressure sensor.
- YES ↓

Is there continuity between atmospheric pressure sensor to engine control unit?

Atmospheric pressure sensor	Control unit
A (LgY wire)	2C
D (Y wire)	2H

- NO → PC: Open circuit in wiring harness from atmospheric pressure sensor to engine control unit
- YES ↓

Is same Code No. present after performing after-repair procedure? (Refer to page 4B—11)
- NO → Atmospheric pressure sensor and circuit OK
- YES ↓

Are engine control unit 2C and 2H terminal voltages OK? (Refer to page 4B—106)
- NO → PC: Short circuit in wiring harness
- YES → PC: Engine control unit malfunction

86U04B-016

Code No. 15 (Oxygen sensor) **PC: Possible Cause**

Note
When the Code No.15 and 17 are present at the same time, first perform the checking procedure for the Code No.17. (Refer to page 4B—28.)

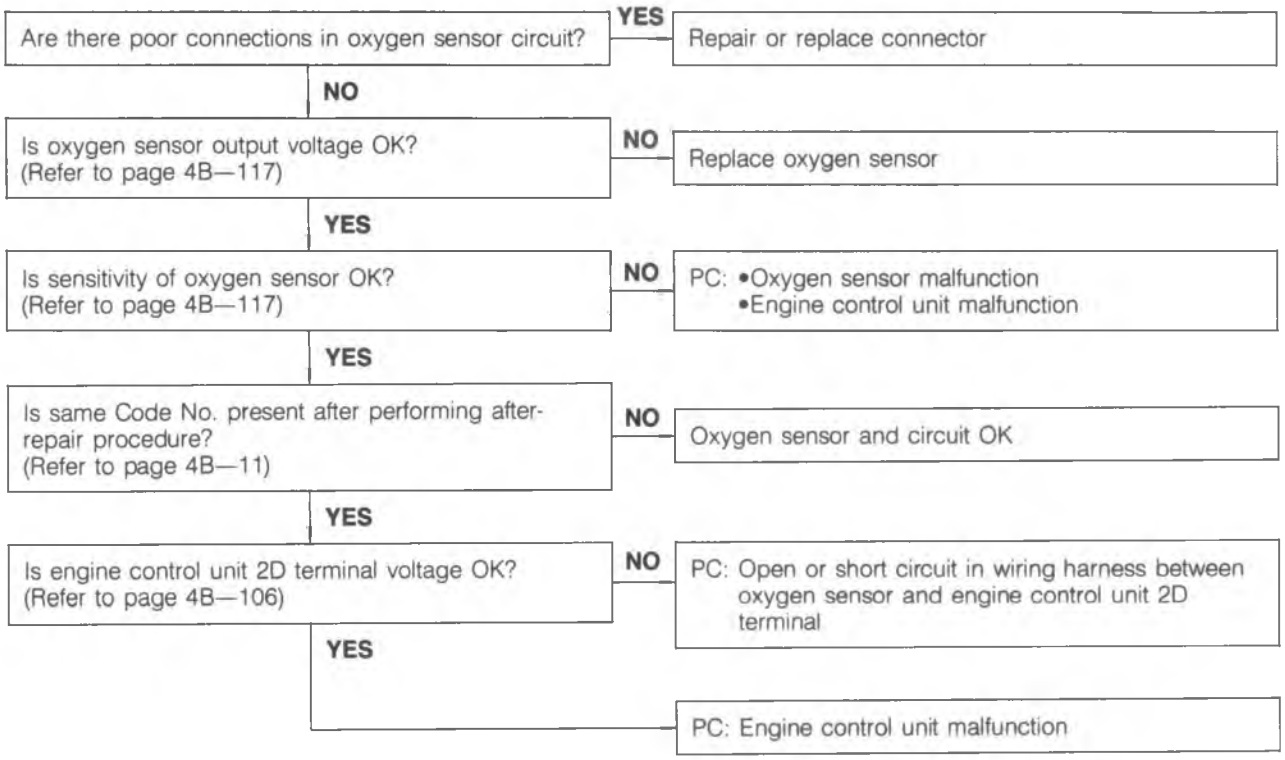

Code No. 16 (EGR position sensor)

PC: Possible Cause

Are there poor connections in sensor circuit?
- YES → Repair or replace connector
- NO ↓

Is EGR control valve OK? (Refer to page 4B—94)
- NO → Replace EGR control valve
- YES ↓

Is resistance of EGR position sensor OK? (Refer to page 4B—94)
- NO → Replace EGR control valve
- YES ↓

Is there continuity between EGR position sensor and engine control unit?

EGR position sensor	Engine control unit
(C) (YL wire)	2F
(B) (LgY wire)	2C
(A) (LgR wire)	2A

- NO → PC: Open circuit in wiring harness from EGR position sensor to engine control unit
- YES ↓

Is there 4.5—5.5V at A terminal of EGR position sensor connector? (Refer to page 4B—94)
- NO → PC: Short circuit in wiring harness from EGR position sensor A terminal to engine control unit 2A terminal
  - Engine control unit malfunction
- YES ↓

Is same Code No. present after performing after-repair procedure? (Refer to page 4B—11)
- NO → EGR position sensor and circuit OK
- YES ↓

Is engine control unit 2F terminal voltage OK? (Refer to page 4B—106)
- NO → PC: Short circuit in wiring harness from EGR position sensor C terminal to engine control unit 2F terminal
- YES → Replace engine control unit

86U04B-018

Code No. 17 (Feedback system)

PC: Possible Cause

Warm up engine and run it at 2,500—3,000 rpm for three minutes.
Does monitor lamp of self-Diagnosis checker illuminate at idle?

NO → PC:
- Air leak in vacuum hoses or emission component
- Contaminated oxygen sensor
- Insufficient fuel injection

YES ↓

Are spark plugs clean?

NO → Clean or replace spark plugs

YES ↓

Is oxygen sensor voltage OK?
(Refer to page 4B—117)

NO → PC: Oxygen sensor malfunction

YES ↓

Is same Code No. present after performing after-repair procedure?
(Refer to page 4B—11)

NO → Feedback system OK

YES ↓

Is engine control unit 2D terminal voltage OK?
(Refer to page 4B—106)

NO → PC: Open or short circuit in wiring harness between oxygen sensor and engine control unit 2D terminal

YES ↓

PC: Engine control unit malfunction

86U04B-019

Code No. 25 (Solenoid valve-Pressure regulator)

PC: Possible Cause

- Are there poor connections in solenoid valve circuit?
  - YES → Repair or replace connector
  - NO ↓
- Is there continuity of solenoid valve?
  - NO → Replace solenoid valve
  - YES ↓
- Is there battery voltage at (RB) wire of solenoid valve connector?
  - NO → PC: Open circuit in wiring harness from (RB) wire to main relay (for engine control unit)
  - YES ↓
- Is there continuity between solenoid valve and engine control unit?

Solenoid valve	Control unit
B (WR wire)	2K

  - NO → PC: Open circuit in wiring harness from solenoid valve to engine control unit
  - YES → PC:
    - Short circuit in wiring harness
    - Engine control unit malfunction

86U04A-029

Code No. 26 (Solenoid valve-Purge)

- Are there poor connections in solenoid valve circuit?
  - YES → Repair or replace connector
  - NO ↓
- Is there continuity of solenoid valve?
  - NO → Replace solenoid valve
  - YES ↓
- Is there battery voltage at (RB) wire of solenoid valve circuit?
  - NO → PC: Open circuit in wiring harness from (RB) wire to main relay (for engine control unit)
  - YES ↓
- Is there continuity between solenoid valve and engine control unit?

Solenoid valve	Control unit
B (WB wire)	2P

  - NO → PC: Open circuit in wiring harness from solenoid valve to engine control unit
  - YES → PC:
    - Short circuit in wiring harness
    - Engine control unit malfunction

86U04A-030

Code No. 28 (Solenoid valve—EGR, vacuum side)

PC: Possible Cause

- Are there poor connections in solenoid valve circuit?
  - YES → Repair or replace connector
  - NO ↓
- Is there continuity of solenoid valve?
  - NO → Replace solenoid valve
  - YES ↓
- Is there battery voltage at RB wire of solenoid valve connector?
  - NO → PC: Open circuit in wiring harness from RB wire to main relay (for engine control unit)
  - YES ↓
- Is there continuity between solenoid valve and engine control unit?

Solenoid valve	Control unit
B (WL wire)	2N

  - NO → PC: Open circuit in wiring harness from solenoid valve to engine control unit
  - YES → PC:
    - Short circuit in wiring harness
    - Engine control unit malfunction

86U04B-020

Code No. 29 (Solenoid valve—EGR, vent side)

- Are there poor connections in solenoid valve circuit?
  - YES → Repair or replace connector
  - NO ↓
- Is there continuity of solenoid valve?
  - NO → Replace solenoid valve
  - YES ↓
- Is there battery voltage of RB wire of solenoid valve connector?
  - NO → PC: Open circuit in wiring harness from RB wire to main relay (for engine control unit)
  - YES ↓
- Is there continuity between solenoid valve and engine control unit?

Solenoid valve	Control unit
B (LW wire)	2M

  - NO → PC: Open circuit in wiring harness from solenoid valve to engine control unit
  - YES → PC:
    - Short circuit in wiring harness
    - Engine control unit malfunction

86U04B-021

Code No. 34 (Solenoid valve—Idle speed control valve (ISC))

Are there poor connections in ISC valve circuit?
- YES → Repair or replace connector
- NO ↓

Is resistance of ISC valve OK?
Resistance; 6.3—9.9 Ω (Refer to page 4B—49).
- NO → Replace ISC valve
- YES ↓

Is there battery voltage at (RB) wire of ISC valve connector?
- NO → PC: Open or short circuit in wiring harness from (RB) wire to main relay (for engine control unit)
- YES ↓

Is there continuity between ISC valve and engine control unit?

ISC valve	Control unit
B (W wire)	2Q

- NO → PC: Open circuit in wiring harness from ISC valve to engine control unit
- YES → PC:
  - Short circuit in wiring harness
  - Engine control unit malfunction

86U04A-032

Code No. 42 (Solenoid valve—Waste gate)

Are there poor connections in solenoid valve circuit?
- YES → Repair or replace connector
- NO ↓

Is there continuity of solenoid valve?
- NO → Repair solenoid valve
- YES ↓

Is there battery voltage of RB wire of solenoid valve connector?
- NO → PC: Open circuit in wiring harness from RB wire to main relay (for engine control unit)
- YES ↓

Is there continuity between solenoid valve and engine control unit?

Solenoid valve	Control unit
B (BrY wire)	1C

- NO → PC: Open circuit in wiring harness from solenoid valve to engine control unit
- YES → PC:
  - Short circuit in wiring harness
  - Engine control unit malfunction

86U04B-022

SWITCH MONITOR FUNCTION

Individual switches can be monitored by the SST.

Note
The test connector must be grounded and the ignition switch ON (engine stopped).

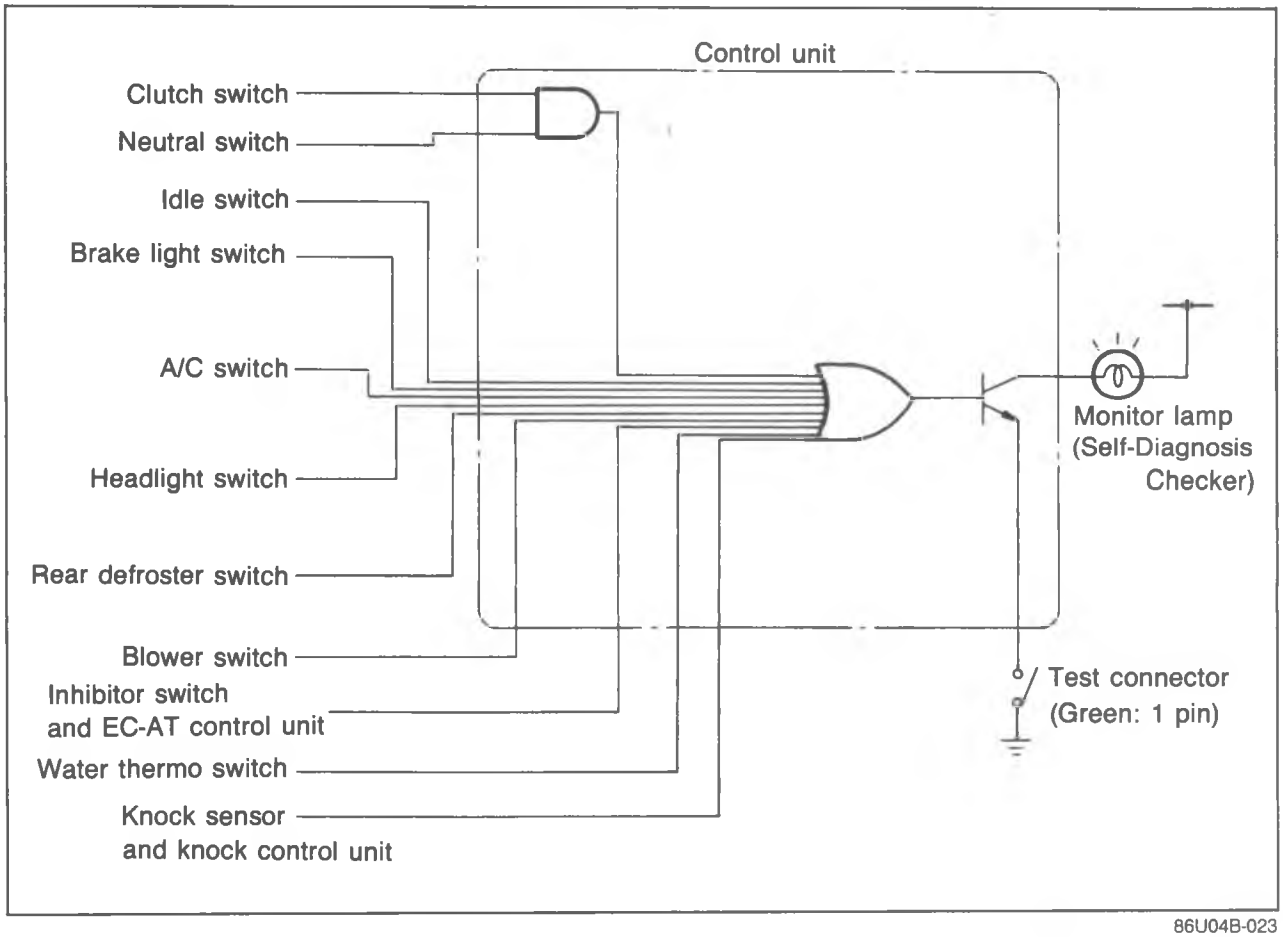

86U04B-023

Switch	Self-Diagnosis Checker (Monitor lamp)		Remarks
	Light ON	Light OFF	
Clutch switch	Pedal released	Pedal depressed	Gear: IN
Neutral switch	In gear	Neutral	Clutch pedal released
Idle switch	Pedal depressed	Pedal released	—
Brake light switch	Pedal depressed	Pedal released	—
A/C switch	ON	OFF	Blower motor position: "1" position
Headlight switch	ON	OFF	—
Rear defroster switch	ON	OFF	—
Blower switch	ON	OFF	Blower motor position: "3" or "4" position
Inhibitor switch and EC-AT control unit	D, 1, 2 and R range	P and N range	
Water thermo switch (Electrical fan)	Terminal disconnected	Terminal connected	While fan not operating
Knock sensor and knock control unit	While tapping engine hanger	—	With test connector grounded

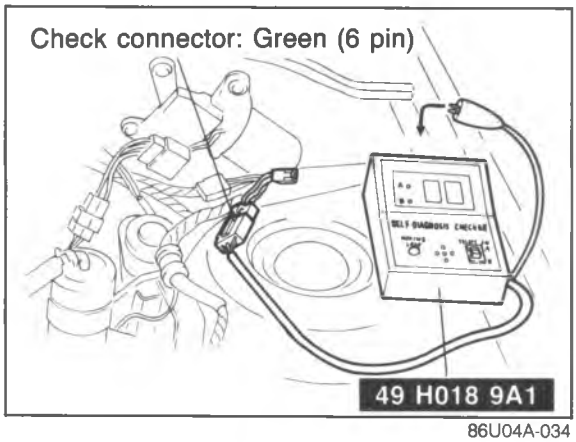

86U04A-034

INSPECTION PROCEDURE

1. Warm up the engine to normal operating temperature and stop it.
2. Connect the **SST** to the check connector (Green, 6-pin) and the negative battery terminal.

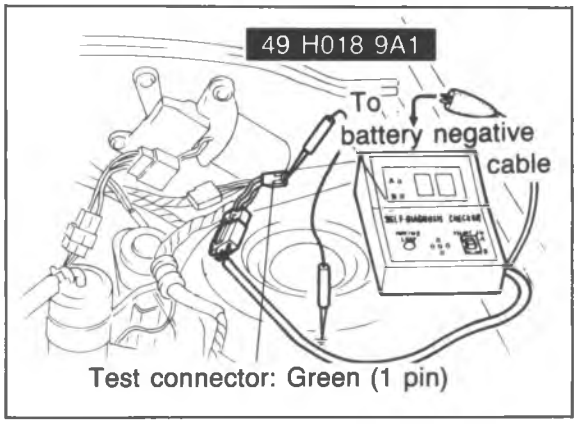

86U04A-035

3. Connect a jumper wire between the test connector (Green, 1-pin) and a ground.
4. Turn the ignition switch ON. Check if monitor lamp illuminates when each switch is made to function as described below.

Caution

a) If any one of the switches is activated, the monitor lamp will stay on.

b) Do not start the engine.

Procedure

Set conditions to deactivate each switch
- All accessories OFF
- Transmission in neutral
- All pedals released

Verify that monitor lamp does not illuminate

NO →

Check each switch and related wiring harness

• Cluch and Neutral switch	:Refer to page 4B—108
• Idle switch	:Refer to page 4B—116
• Brake light switch	:Refer to 4B—105
• A/C switch	:Refer to section 16
• Headlight switch	:Refer to section 15
• Rear defroster switch	:Refer to section 15
• Blower switch	:Refer to section 15
• Inhibitor switch	:Refer to page 4B—109
• Water thermo switch	:Refer to section 3

YES ↓

Check each switch as described

Neutral and Clutch switch (MTX)

Shift transmission into gear
Check that monitor lamp illuminates with clutch pedal released

NO →

PC:
- Neutral or clutch switch malfunction (Refer to 4B—108)
- Open circuit in related wiring hhharness
- Engine control 3D terminal malfunction (Refer to page 4B—107)

YES ↓

Depress clutch pedal
Check that monitor lamp does not illuminate
Return transmission to neutral

NO →

PC:
- Clutch switch malfunction (Refer to page 4B—108)

86U04B-024

Idle switch

Depress accelerator pedal, and check that the monitor lamp illuminates

NO →
PC:
- Idle switch malfunction (Refer to page 4B—116)
- Short circuit in wiring harness from idle switch to control unit
- Engine control unit (1E) terminal malfunction (Refer to page 4B—105)

YES ↓

Idle switch OK
Release accelerator pedal

86U04B-026

Brake light switch

Depress brake pedal
Check that monitor lamp illuminates

NO →
PC:
- Brake light switch malfunction (Refer to page 4B—108)
- Open circuit in wiring harness from brake light switch to engine control unit
- Engine control unit (1J) terminal malfunction (Refer to 4B—105)

YES ↓

Brake light switch OK
Release brake pedal

86U04B-026

Blower switch

Turn blower switch to "3rd" position
Check that monitor lamp illuminates

NO →
PC:
- E/L control unit malfunction (Refer to page 4B—110)
- Blower switch malfunction (Refer to Section 15)
- Open circuit in the wiring harness from blower switch to engine control unit through E/L unit
- Engine control unit (1I) terminal malfunction (Refer to page 4B—105)

YES ↓

Blower switch OK

86U04B-027

A/C switch

Set blower switch to 1st position
Turn A/C switch ON
Check that monitor lamp illuminates

NO →
PC:
- E/L control unit malfunction (Refer to page 4B—110)
- A/C switch malfunction (Refer to section 16)
- Blower switch malfunction
- Open circuit in wiring harness from A/C switch to engine control unit through E/L unit
- Engine control unit (1L) terminal malfunction (Refer to page 4B—105)

YES ↓

A/C switch OK
Turn OFF A/C switch and blower switch

86U04B-028

Headlight switch

Turn ON headlight switch
Check that monitor lamp illuminates

NO →
PC: • E/L control unit malfunction (Refer to page 4B—110)
• Headlight switch malfunction (Refer to section 15)
• Open circuit in wiring harness from headlight switch to engine control unit through E/L unit
• Engine control unit (1I) terminal malfunction

YES ↓

Headlight switch OK
Turn OFF headlight switch

86U04B-029

Rear defroster switch

Turn ON rear defroster switch
Check that monitor lamp illuminates

NO →
PC: • E/L control unit malfunction (Refer to page 4B—110)
• Rear defroster switch malfunction (Refer to Section 15)
• Open circuit in wiring harness from rear defroster switch to engine control unit through E/L unit
• Engine control unit (1I) terminal malfunction

YES ↓

Rear defroster switch OK
Turn OFF rear defroster switch

86U04B-030

Inhibitor switch

Shift transmission into gear
Check that monitor lamp illuminates

NO →
PC: • Inhibitor switch malfunction (Refer to page 4B—109)
• Open or short circuit in related wiring harness
• Control unit (3D) terminal malfunction (Refer to page 4B—107)

YES ↓

Inhibitor switch and EC-AT unit OK
Shift into "P" or "N" range

86U04B-031

Water thermo switch circuit (not included in switch inspection)

Warning
The electrical fan operates when the connector is disconnected. Use caution.

Disconnect water thermo switch connector
Check that monitor lamp illuminates

NO →
PC: • E/L control unit malfunction (Refer to page 4B—110)
• Water thermo switch or relay malfunction (Refer to section 3)
• Short circuit wiring harness from water thermo switch to engine control unit through E/L unit

YES ↓

Water thermo switch circuit OK
Connect water thermo switch connector

86U04B-032

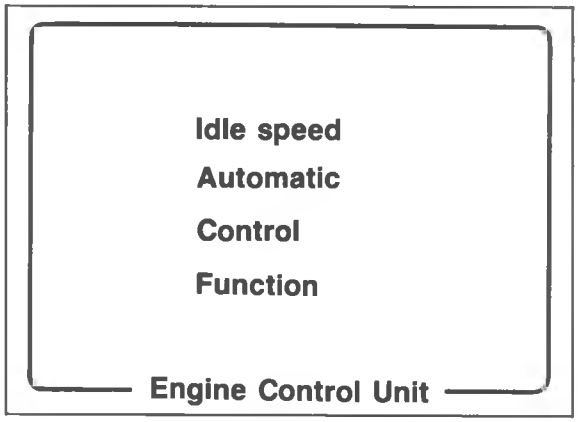

86U04A-045

IDLE ADJUSTMENT

IDLE SPEED

Because the idle speed is controlled automatically by the engine control unit through the idle speed control (ISC) solenoid valve, usually it is not necessary to check and adjust the idle speed.
However, the idle speed should be adjusted when rough idling occurs when the test connector (Green, 1-pin) is grounded.

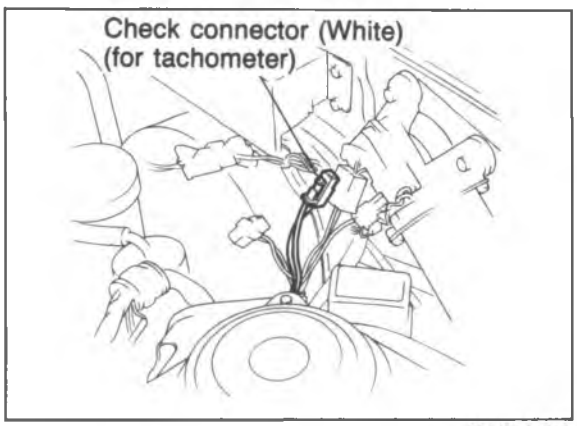

86U04A-046

Preparation

1) Check the condition of the engine (plugs, leaks in hoses, etc.).
2) Make sure all accessories are OFF.
3) Warm up the engine and run it for **Three minutes at 2,500—3,000 rpm** in neutral.
4) Check the initial ignition timing and adjust if necessary.

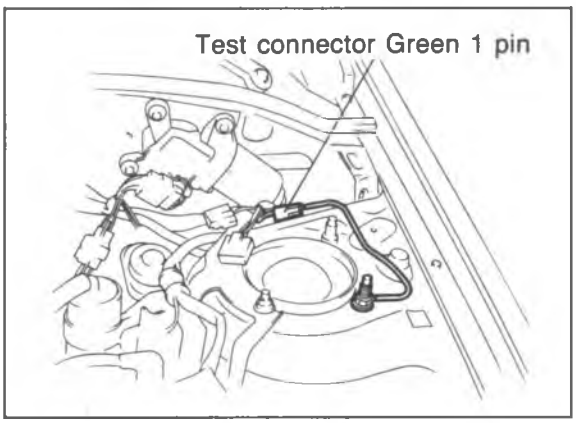

86U04A-047

Inspection and Adjustment

1. Ground the test connector with a jumper wire.

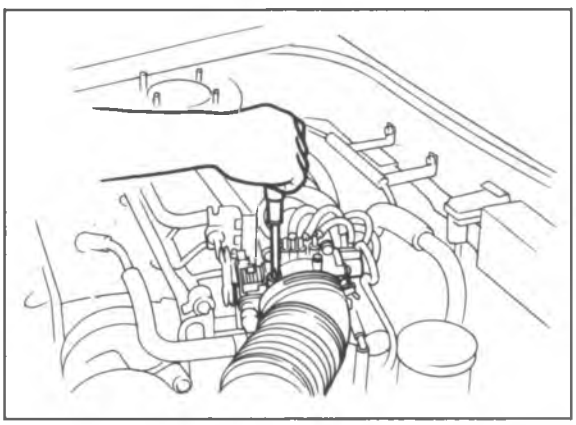

86U04A-048

2. Check that the idle speed is within specification.

Idle speed: 750 ± 25 rpm MTX: Neutral
ATX: P range

3. If the idle speed is not within specification, remove the blind cap from the throttle body and adjust it by turning the air adjust screw.
4. After adjusting the idle speed, install the blind cap and disconnect the jumper wire from the test connector.

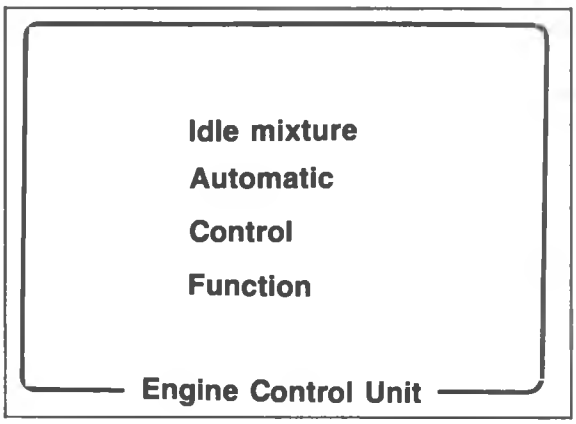

86U04A-049

IDLE MIXTURE

Because an automatic compensation function for air/fuel mixture is built into the engine control unit, it is not necessary to check and adjust the idle mixture.

INTAKE AIR SYSTEM

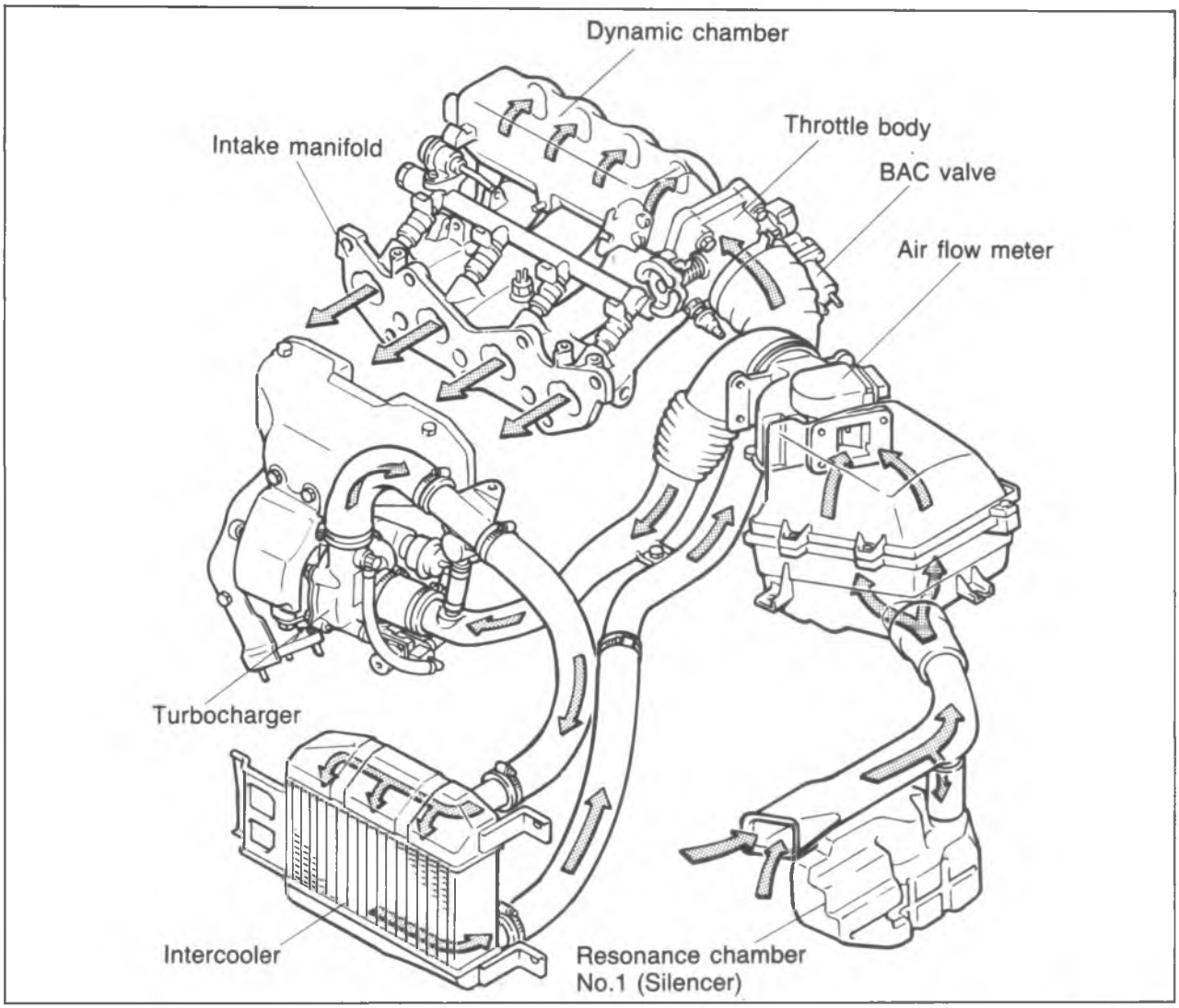

86U04B-153

This system controls the air required by the engine for operation. The system consists of the air duct, air cleaner, air flow meter, throttle body, dynamic chamber, and intake manifold.

COMPONENT DESCRIPTIONS

Component	Function	Remarks	Application	
			New model	Previous model
Air cleaner	Filters air into throttle body		○	○
Air flow meter	Detects amount of intake air; sends signal to control unit	Intake air temp sensor and fuel pump switch are integrated	○	○
Throttle sensor	Detects throttle valve opening angle; sends signal to control unit	Installed on throttle body	○	○
Throttle body	Controls intake air quantity	Integrated throttle sensor and idle switch	○	○

86U04A-051

REMOVAL

Caution
Before removing the following parts, release the fuel pressure from fuel system to reduce the possibility of injury or fire. (Refer to page 4B—60.)

Remove in the sequence shown in the figure.

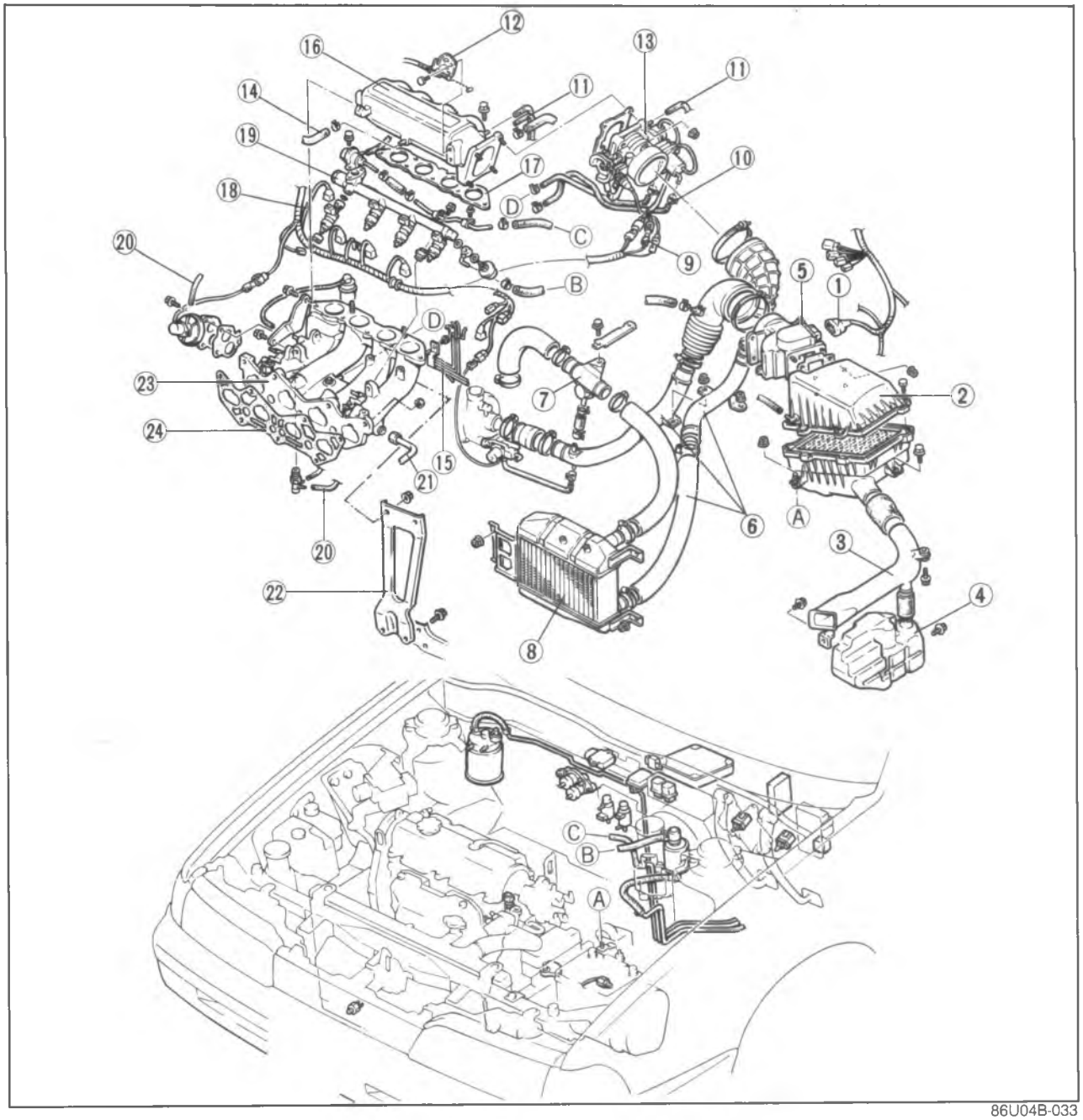

86U04B-033

1. Air flow meter connector
2. Air cleaner
3. Air duct
4. Resonance chamber No.1
5. Air flow meter
6. Air hoses
7. Air bypass valve
8. Intercooler
9. Connectors
10. Water hoses
11. Vacuum hoses
12. Accelerator cable
13. Throttle body
14. PCV hose
15. Vacuum pipe assembly
16. Dynamic chamber
17. Gasket
18. Wiring harness
19. Delivery pipe assembly
20. Vacuum hoses
21. EGR pipe
22. Intake manifold bracket
23. Intake manifold
24. Gasket

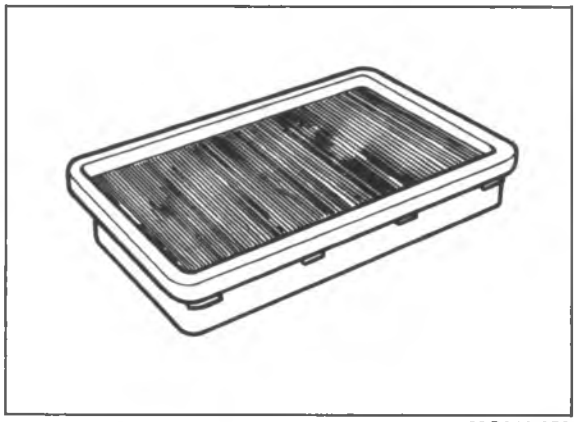

69G04A-059

PARTS INSPECTION

Air Cleaner Element

1. Check the condition of the air cleaner element.
2. Replace, if necessary.

Caution
Do not use the compressed air to clean the air cleaner element.

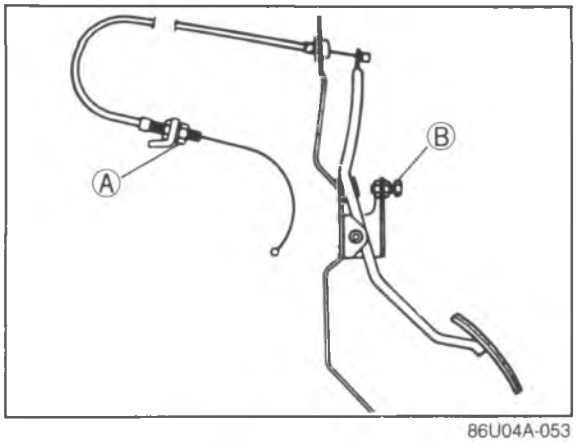

86U04A-053

Accelerator Cable

1. Inspect the deflection of the cable. If the deflection is not within **1—3 mm (0.04—0.12 in.)**, adjust by turning nuts A.
2. Depress the accelerator pedal to the floor and confirm that the throttle valve is fully opened. Adjust by turning bolt B if necessary.

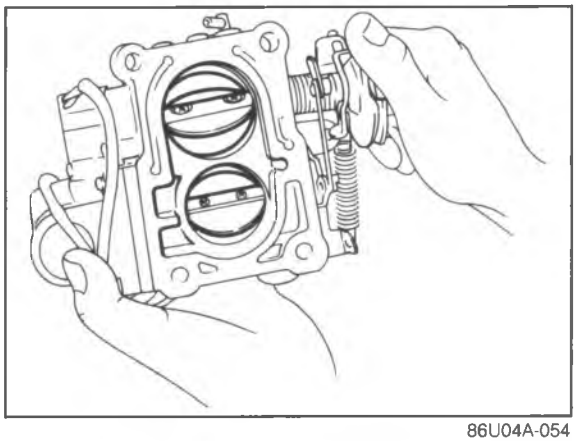

86U04A-054

Throttle Body

Note
The No. 2 throttle valve is preset at the factory to begin opening after the No. 1 throttle valve has opened approx. 25 degrees (MTX) or 10 degrees (ATX).

1. Check that the No. 1 and No. 2 throttle valves move smoothly when the throttle lever is moved from fully closed to fully open.
2. Replace, if necessary.

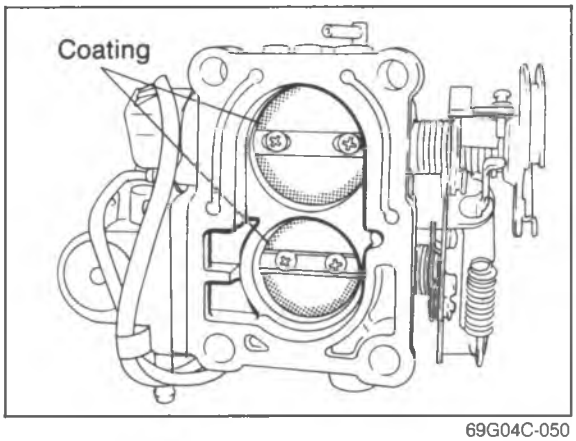

69G04C-050

Caution
Do not remove the thin sealing coating from the throttle valve or bore.

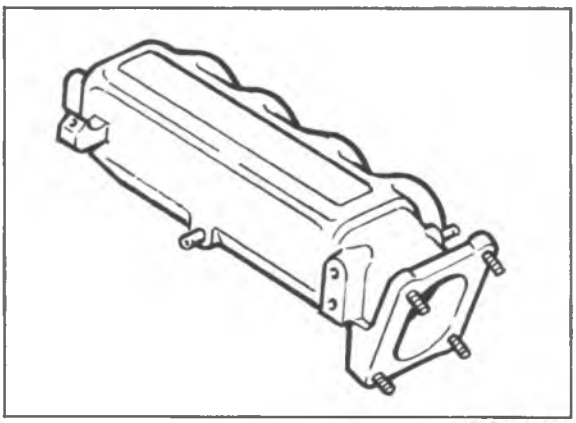

69G04A-062

Dynamic Chamber

1. Visually check the dynamic chamber for damage.
2. Replace, if necessary.

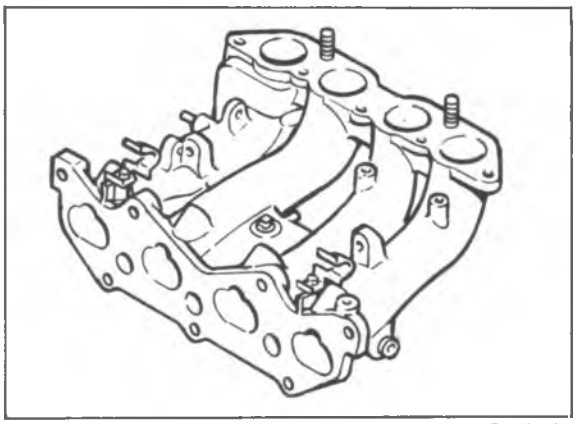

69G04A-064

Intake Manifold

1. Visually check the intake manifold for damage.
2. Replace, if necessary.

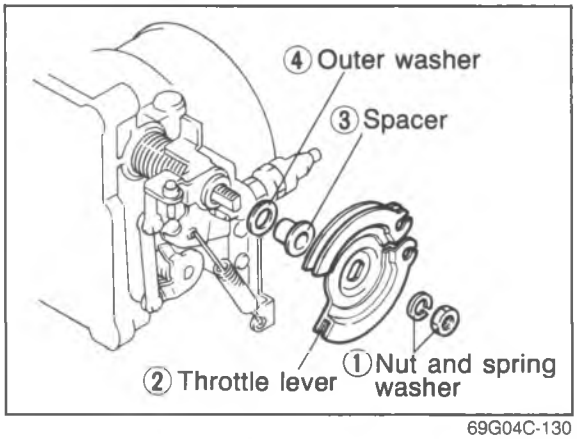

69G04C-130

REPLACEMENT

Throttle Lever

Removal

Caution
When loosening the throttle lever nut, hold the throttle valves fully open to prevent damaging the idle switch.

Remove the throttle lever in the sequence shown in the figure.

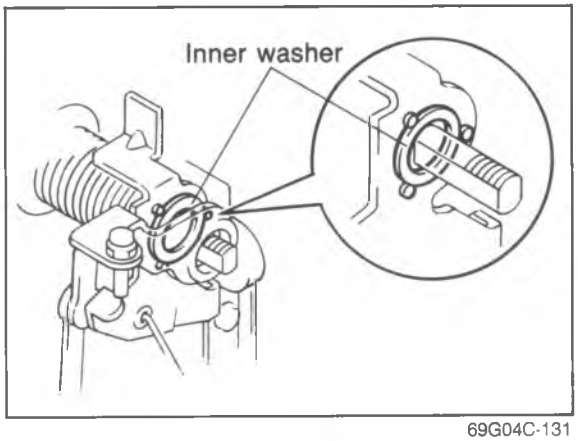

69G04C-131

Installation

1. Check that the inner washer is in the proper position as shown in the figure.
2. Assemble the spacer and outer washer and install them onto the throttle shaft.
3. Install the throttle lever onto the throttle shaft.

Caution
When tightening the throttle lever nut, hold the throttle valves fully closed to prevent bending the stopper lever.

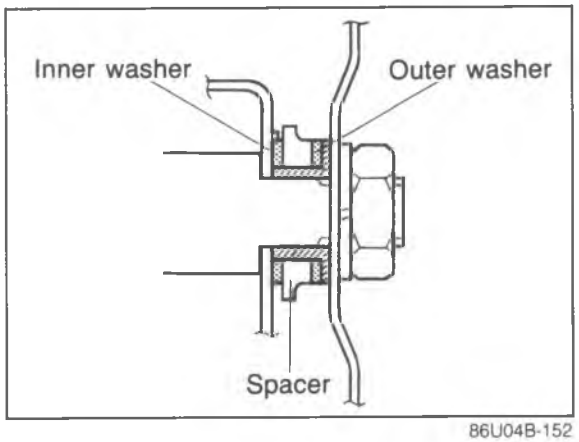

86U04B-152

4. Tighten the throttle lever nut.

Tightening torque:
16—23 N·m (1.6—2.3 m-kg, 12—17 ft-lb)

5. Check that the inner and outer washer and spacer are assembled correctly as shown.
6. Check that No.1 and No.2 throttle valves move smoothly and that No.2 throttle valve is closed completely when the No.1 throttle valve is closed.
7. Check the operation of the idle switch.
(Refer to page 4B—116)

INSTALLATION

Install in the reverse order of removal, referring to the installation note.

Torque Specification

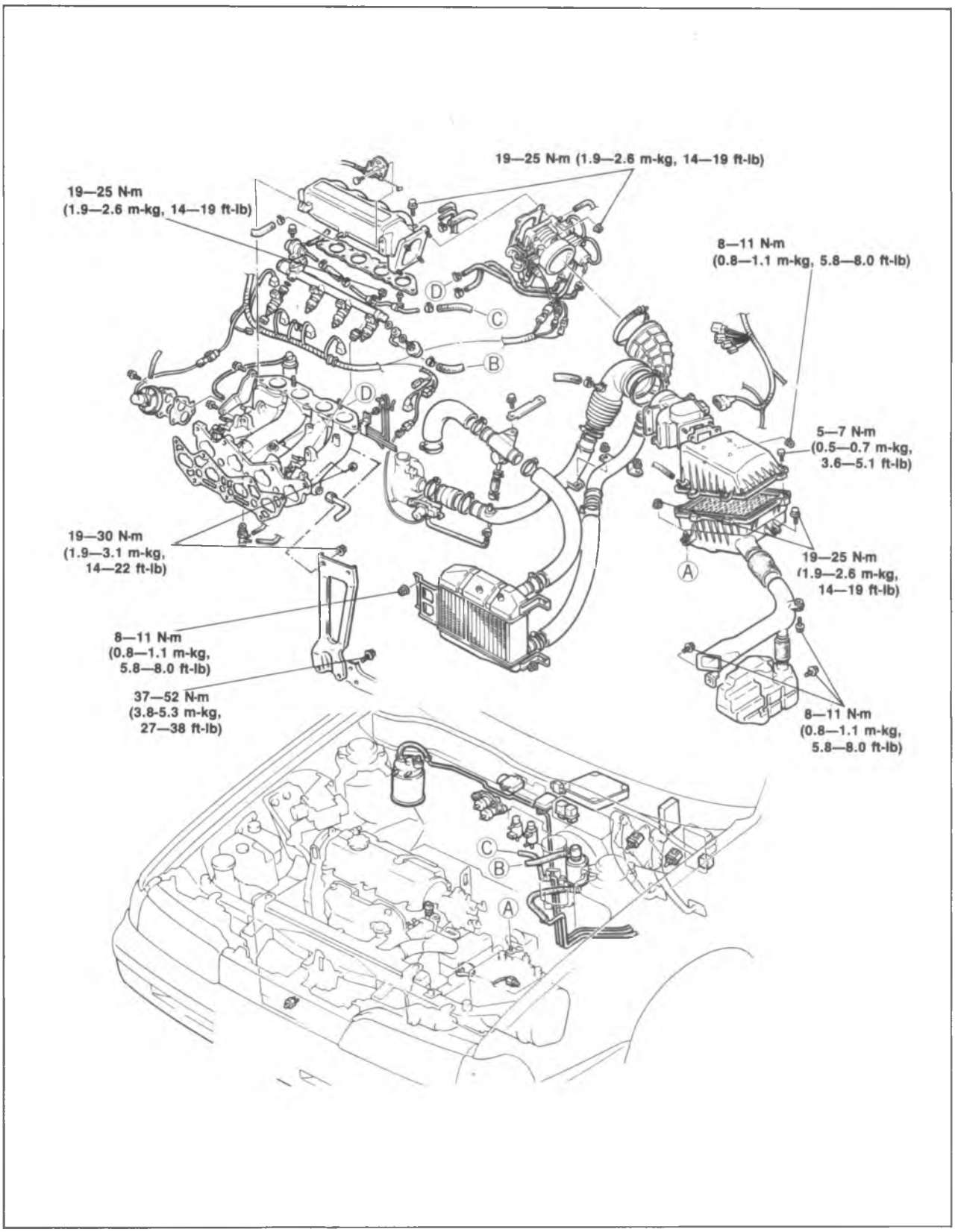

86U04A-055

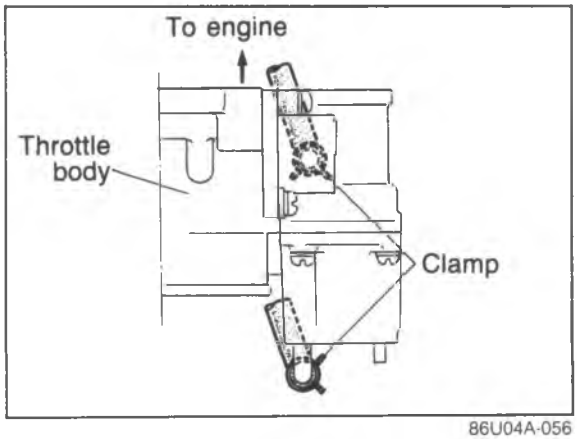

86U04A-056

Installation Note
Water hose spring clamps
Face the clamp end as shown in the figure.

Gasket
Use new gaskets at the intake manifold, dynamic chamber, and throttle body.

IDLE SPEED CONTROL (ISC) SYSTEM

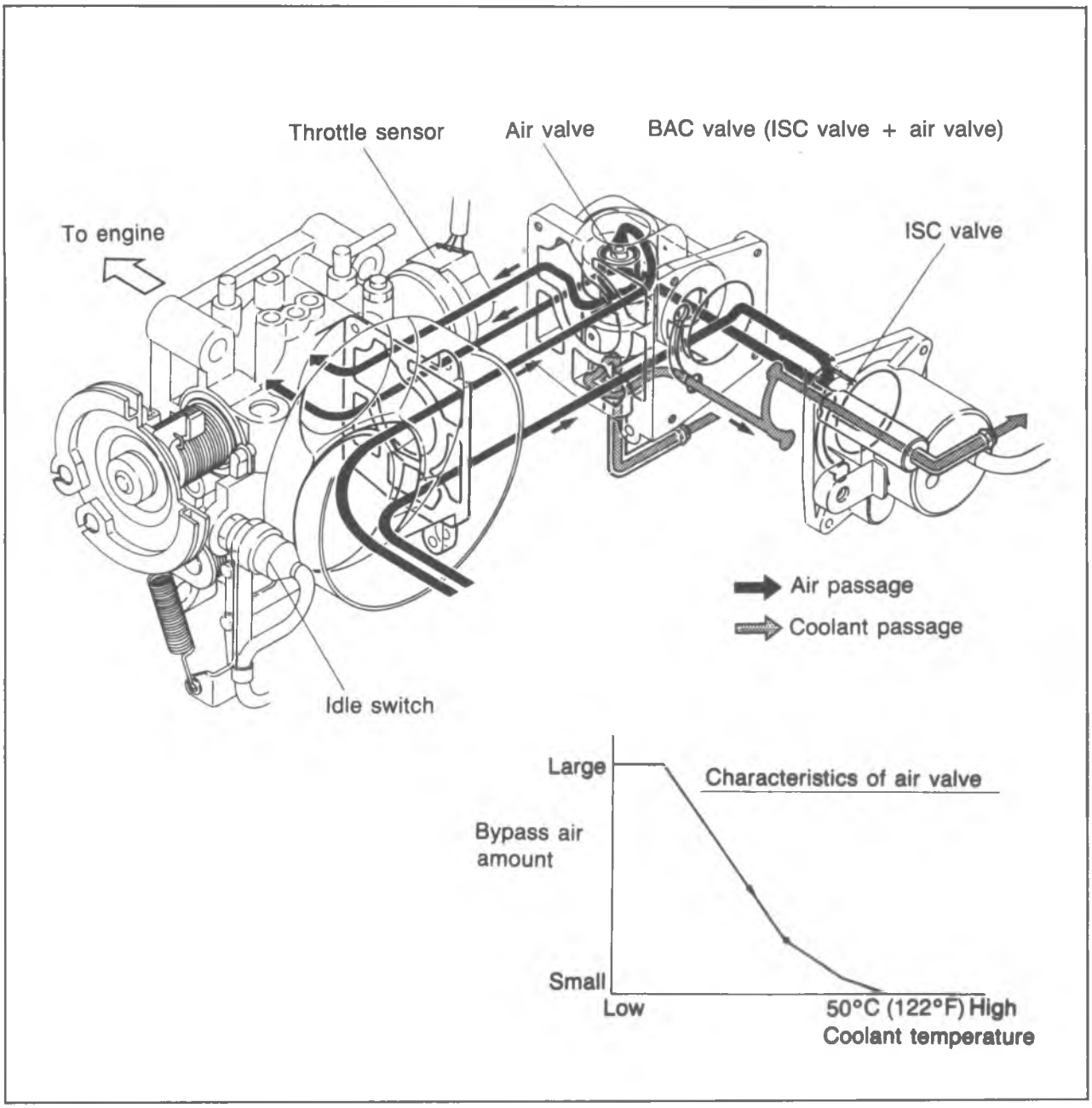

86U04A-057

To improve idle smoothness, the ISC system controls the intake air amount by regulating the bypass air amount that passes through the throttle body.
This system consists of the BAC valve and the control system.

The BAC valve consists of the air valve which functions only during cold engine conditions **(below 50°C (122°F))** and the ISC valve which works throughout the entire engine speed range.

COMPONENT DESCRIPTIONS

Component	Function	Remarks	Application	
			New model	Previous model
Air valve	When cold, supplies bypass air into dynamic chamber	• Engine speed increased to shorten warm-up period • Thermo wax type • Installed in BAC valve	○	○
Clutch switch	Detects in-gear condition; sends signal to control unit	Switch ON when clutch pedal released	○	○
E/L control unit	Detects that E/L is being applied; sends signal to control unit		○	X
Engine control unit	Detects signals from input sensors and switches; controls solenoid valve (Idle speed control)		○	○
Idle switch	Detects when throttle valve fully closed; sends signal to control unit	Installed on throttle body	○	○
Inhibitor switch	Detects in-gear condition; sends signal to EC-AT control unit	Switch ON in "N" or "P" range	○	○
Ne rotor and pick-up	Detects crank angle at 30° intervals; sends signal to control unit	Engine speed signal	○	X
Neutral switch	Detects in-gear condition; sends signal to control unit	Switch ON when in-gear	○	○
P/S pressure switch	Detects P/S operation; sends signal to control unit	P/S: ON when steering wheel turned right or left	○	○
Solenoid valve (Idle speed control)	Controls bypass air amount	• Controlled by duty signal from control unit • With integrated air valve • Works idle-up	○	X
Test connector	For Self-Diagnosis Checker and idle speed adjustment	1-pin connector (Green)	○	X
Throttle sensor	Detects throttle valve opening angle; sends signal to control unit	Installed on throttle body	○	○

86U04B-034

TROUBLESHOOTING

Check the condition of the wiring harness and connectors before checking the sensors or switches.

Note
Make the system inspection first. If no problem is found, continue with the next system inspection of the Troubleshooting Guide. (Refer to pages 4B—8 and 9.)

Symptom \ Possible cause / Page		Air valve	P/S pressure switch	Solenoid valve (idle speed control)	Electrical load control unit	Engine control unit terminal			System inspection
						1K	1W	2Q	
		4B—49	4B—109	4B—49	4B—110	4B—105	4B—106	4B—107	4B—48
Engine stalls	While warming up	4		1			2	3	
	After warming up		2	1	3	5	4	6	
Rough idle	While warming up	5		2			3	4	1
	After warming up		3	2	4	6	5	7	1
High idle speed after warming up		7	3	2	4	6	5	7	1
Runs rough on deceleration				2			3	4	1
Afterburn in exhaust system		5		2			3	4	1
Fails emission test		5		2			3	4	1

86U04A-035

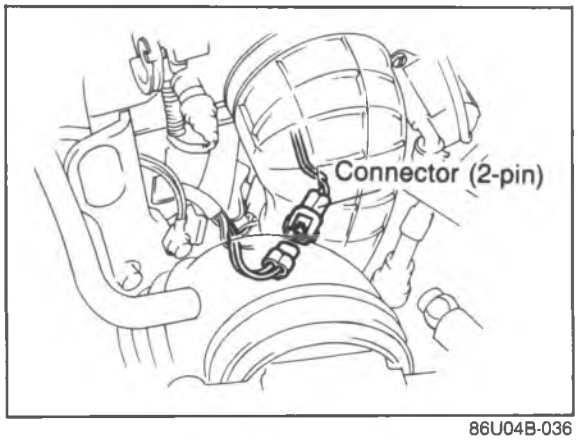

86U04B-036

System Inspection
(Air valve)

1. Disconnect the ISC valve connector when the engine is cold and idling.
2. Note the engine speed and reconnect the connector.
3. Warm up the engine to the normal operating temperature and disconnect the connector again.
4. Check that the engine speed is lower when the connector is disconnected warm than when it is disconnected when cold.

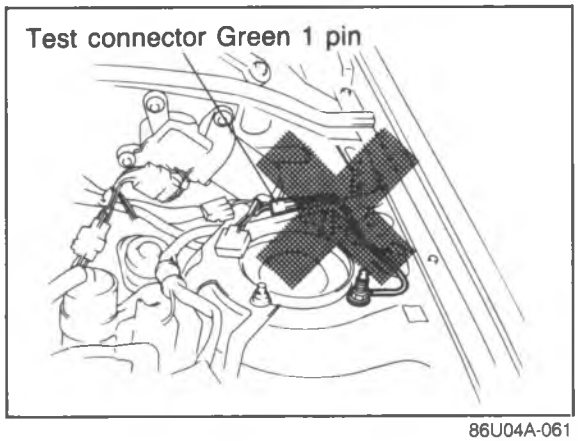

86U04A-061

(ISC valve)

5. Connect the ISC valve connector.

Note
Make sure that the test connector is not grounded and that the idle speed is set to specification.

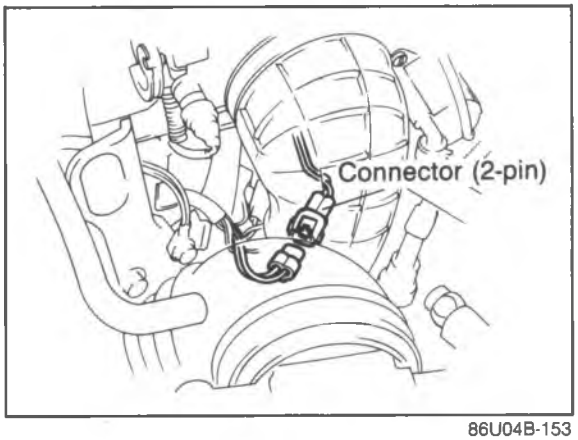

86U04B-153

6. Again disconnect the ISC valve connector with the engine is at normal operating temperature.
7. Check that the engine speed decreases.
8. Reconnect the ISC valve connector.

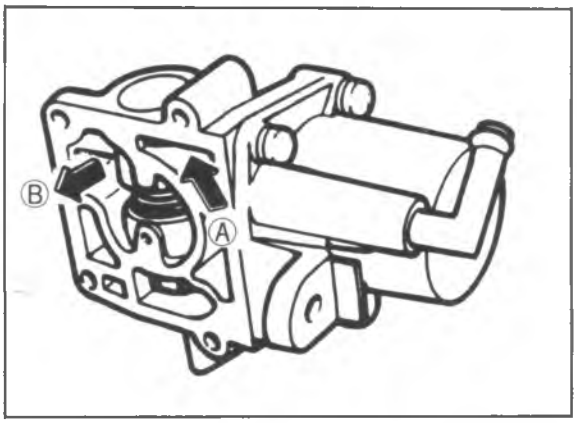

86U04B-037

BAC Valve
Air valve

1. Remove the BAC valve from the throttle body.
2. Blow air through the valve from port A and check that air comes out of port B when the BAC valve is cold.
3. If not correct, replace the BAC valve.

Note
Refer to "Istallation" on this page for the BAC valve installation.

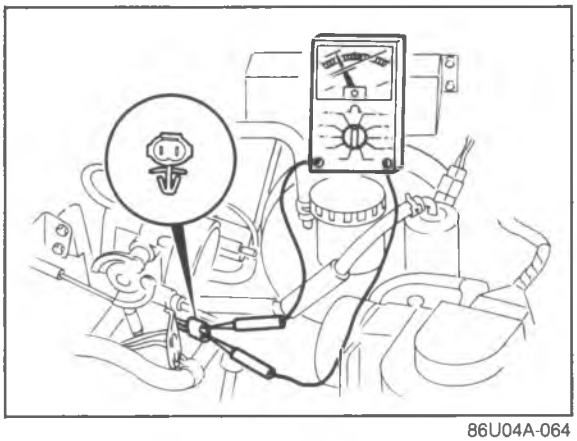

86U04A-064

ISC valve

1. Disconnect the ISC valve connector.
2. Connect an ohmmeter to the terminals of the ISC valve.
3. Check the resistance.

Resistance (normal operating temperature): 6.3—9.9 Ω

4. If not correct, replace the BAC valve.

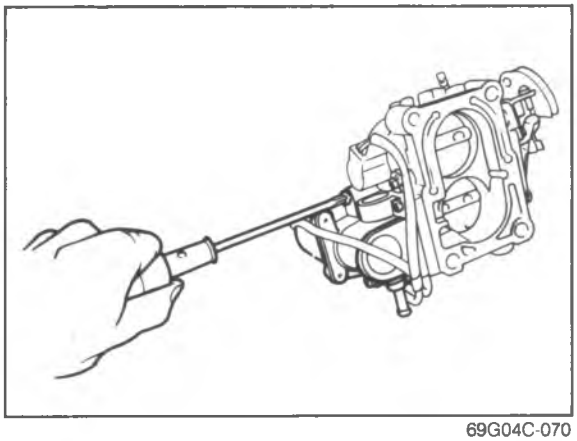

69G04C-070

Removal

1. Remove the screws.
2. Remove the BAC valve from the throttle body.

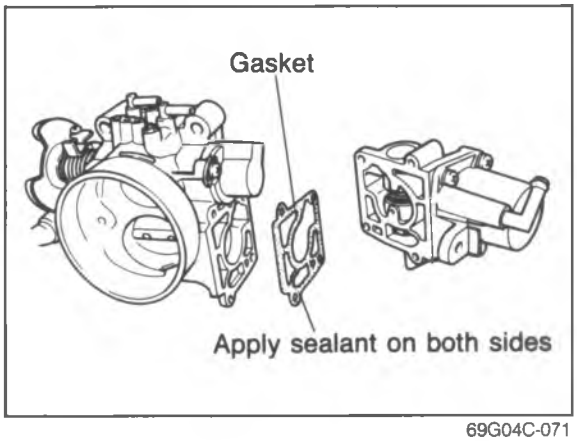

69G04C-071

Installation

Caution
Use a new gasket.

1. Remove any dirt or old sealant from the contact surfaces.
2. Apply sealant to both sides of the gasket.
3. Tighten the screws.

TURBOCHARGING SYSTEM

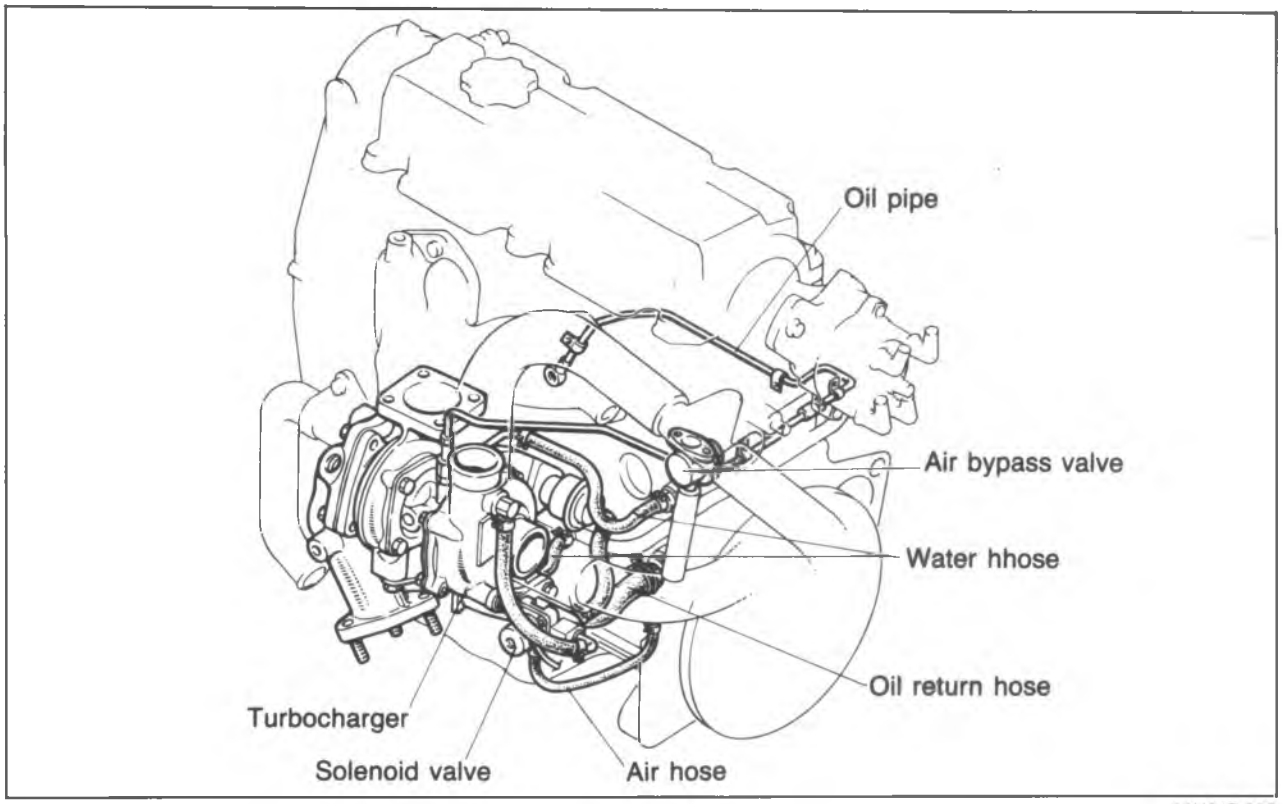

86U04B-038

This system utilizes the energy of the exhaust gas to pressurize the intake air. It therefore supplies more than the normal amount of air into the combustion chamber. As a result of the more fully charged combustion chamber, higher output and higher torque can be obtained by a turbocharged engine than that of a comparable non-turbocharged engine.
If knocking occurs during high-boost condition, the maximum boost is reduced by the solenoid valve to prevent possible engine damage.

COMPONENT DESCRIPTIONS

Component	Function	Remarks	Application	
			New model	Previous model
Air bypass valve	Bypasses compressed air from after turbocharger to before turbocharger during deceleration; prevents noise		○	X
Engine control unit	Detects signals from input sensors; controls solenoid valve (waste gate) operation		○	X
Intake air thermo sensor	Detects intake air temperature; sends signal to control unit	Installed in air flow meter	○	○
Intercooler	Reduces compressed air temperature from turbocharger		○	X
Knock control unit	Receives knock signal from knock sensor; sends signal to control unit		○	○
Knock sensor	Detects engine knocking; sends signal to knock control unit		○	○
Solenoid valve (Waste gate)	Controls turbocharger boost pressure applied to actuator		○	X
Turbocharger	Pressurizes intake air utilizing exhaust gas flow	Integrated solenoid valve (waste gate)	○	○

TROUBLESHOOTING

Check the condition of the wiring harness and connectors before checking sensors or switches.

Possible cause / Page / Symptom	Turbocharger	Air bypass valve	Intercooler	Boost pressure	Waste gate	Overboost warning
	4B—53	4B—52	4B—52	4B—52	4B—52	4B—53
Poor acceleration, hesitation or lack of power	4	3	6	1	2	5
Excessive oil consumption	1					
Knocking	3			2	1	
Abnormal noise or vibration	2	1				

86U04B-040

OPERATION NOTE

1. Do not accelerate suddenly or operate at full throttle immediately after starting a cold engine. Allow the engine to reach normal operating temperature before using full power.
2. Run the engine at idle for at least 30 seconds after heavy-load or high-speed driving before stopping.
3. If there is a sudden drop in power while driving, it is possible that there is a fault related to the turbocharger. Before shutting the engine off, immediately reduce speed and drive at the lowest possible engine speed.

86U04B-041

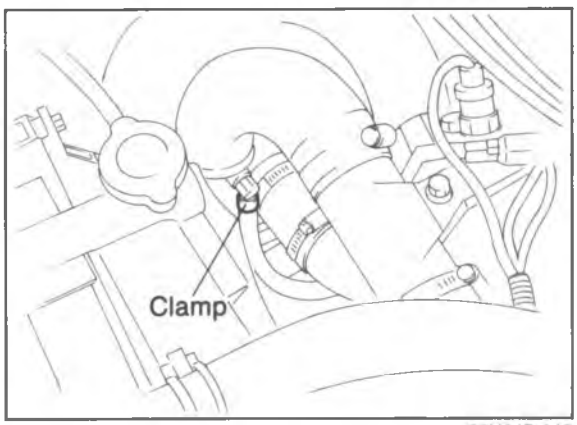

86U04B-042

SERVICE NOTE

Attachment of Hoses

To prevent the hoses from becoming disconnected due to boost pressure, be sure to attach them securely with the spring clamps.

Overboost Warning Buzzer

The warning buzzer indicates a possible fault of either the waste gate, actuator, or solenoid valve (waste gate). These components must be checked if the buzzer sounds.

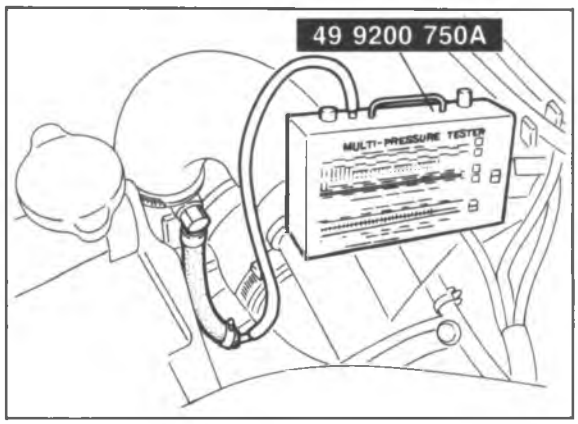

86U04B-043

TURBOCHARGER BOOST PRESSURE

1. Be sure the engine is cool.
2. Disconnect hose A from the solenoid valve and connect the **SST** as shown.
3. Warm up the engine to normal operating temperature.
4. Increase the engine speed to **4,000 rpm** and check that the boost pressure is within specification.

Specification:
- **Above 0 kPa (0 kg/cm^2, 0 psi) (any positive pressure)**

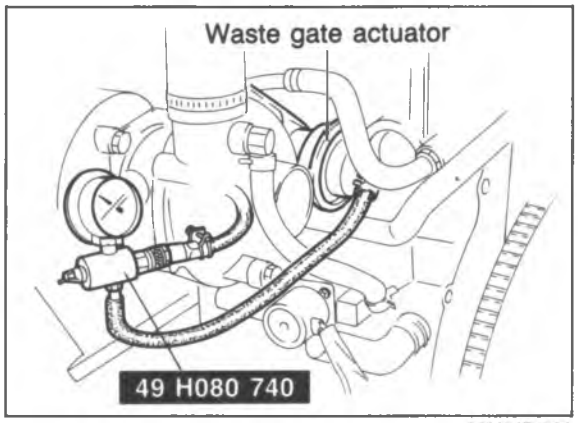

86U04B-044

WASTE GATE

1. Be sure the engine is cool.
2. Remove the exhaust manifold insulator and side insulator.
3. Remove the hose (connected to actuator) and connect the **SST** as shown.
4. Apply **58.9 kPa (0.6 kg/cm^2, 8.5 psi)** of compressed air.
5. Check that the rod moves when disconnecting and reconnecting the hose supplying the compressed air.

Caution
Do not apply compressed air over 98 kPa (1.0 kg/cm^2, 14 psi).

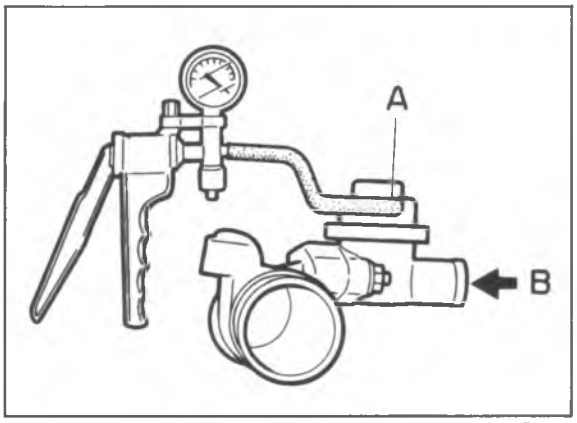

86U04B-045

AIR BYPASS VALVE

1. Remove the air bypass valve.
2. Connect a vacuum pump to port A of the valve.
3. Apply vacuum and blow from port B.
4. Check that air flows at the specified vacuum.
5. If not correct, replace the air bypass valve.

Vacuum:
250—400 mmHg (9.8—15.7 inHg)

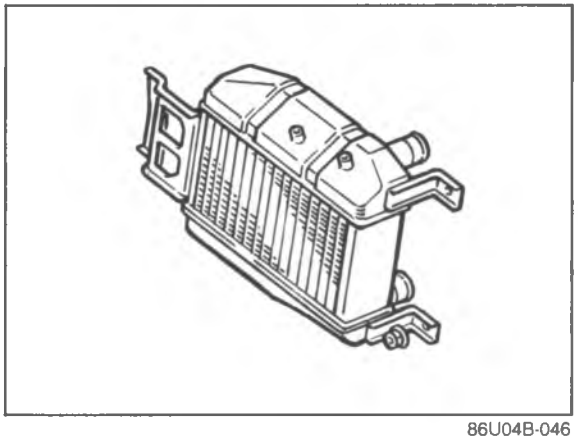

86U04B-046

INTERCOOLER

1. Remove the intercooler.
2. Inspect it for cracks, restriction, or damage.
3. Replace if necessary.

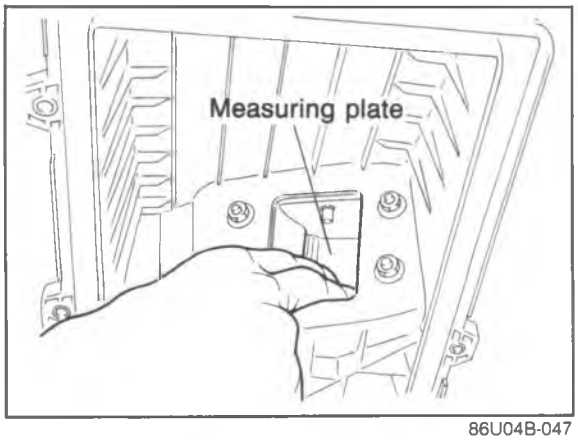

86U04B-047

OVERBOOST WARNING

1. Start the engine and run it at **2,000 rpm**.
2. Lift the air cleaner upper case, and push the measuring plate open fully.
3. Check that the warning buzzer sounds and the engine speed drops or engine stalls.

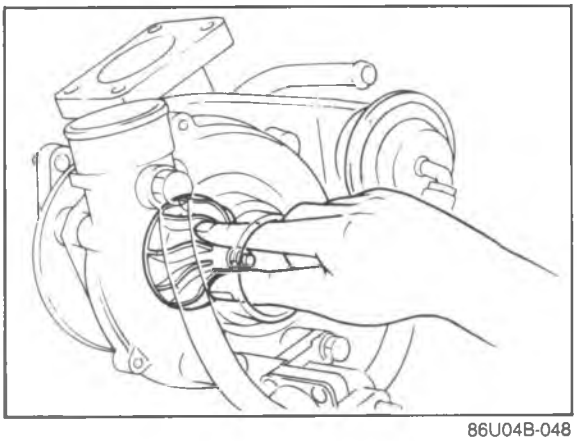
86U04B-048

TURBOCHARGER

Inspection of Compressor Wheel Assembly

1. Be sure the engine is cool.
2. Remove the air hose.
3. Check that the wheel assembly turns smoothly.
4. If there is excessive load or noise, replace the turbocharger.

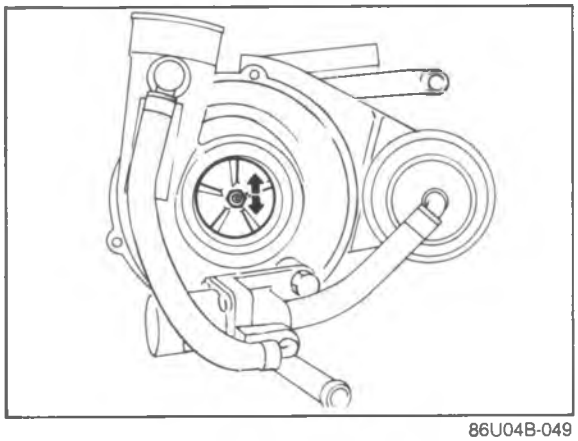
86U04B-049

Inspection of Turbine Wheel Deflection

1. Be sure the engine is cool.
2. Remove the air hose.
3. Check that the wheel does not touch the compressor housing.
4. If the wheel touches the housing, replace the turbocharger.

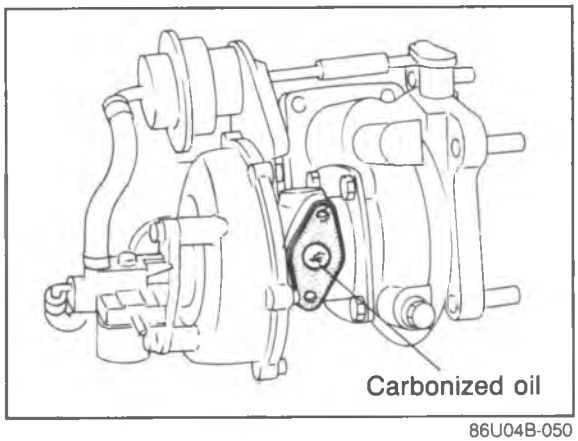

86U04B-050

Inspection of Oil Passage

1. Be sure the engine is cool.
2. Remove the oil return pipe.
3. Check that carbonized oil is not blocking the oil passage in the turbocharger or the oil return pipe.
4. Replace the turbocharger and return pipe if necessary.

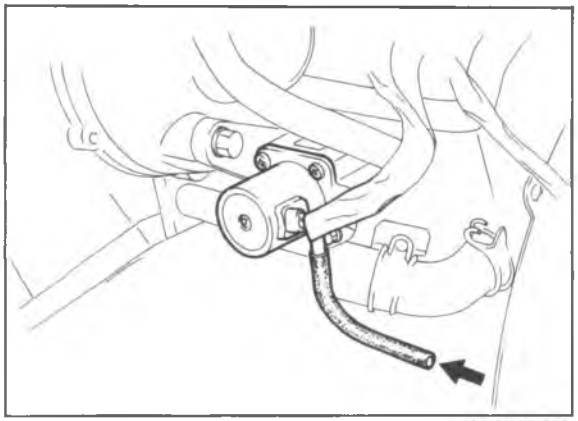

86U04B-051

Inspection of Solenoid Valve

1. Disconnect the small air tube from the air hose.
2. Disconnect the solenoid valve connector.
3. Blow through the air tube and check that the air does not flow.
4. If not correct, replace the solenoid valve and turbocharger as an assembly.

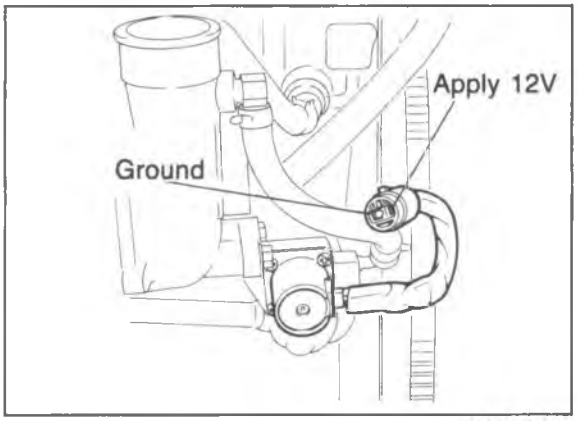

86U04B-052

5. Apply **12V** to the solenoid valve as shown.
6. Blow through the air tube and check that air passes.
7. If not correct, replace the solenoid valve and turbocharger as an assembly.

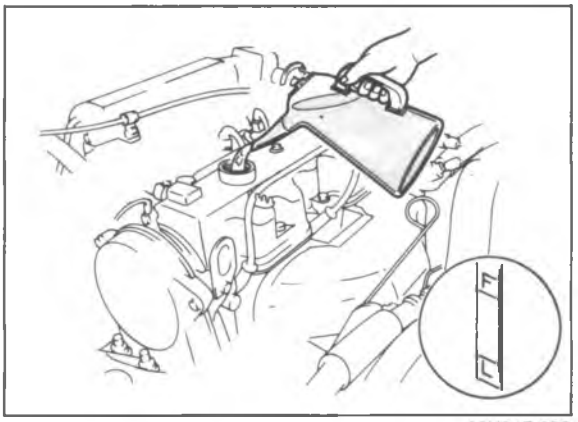

86U04B-053

Removal and Installation

Precaution

1. When replacing the turbocharger, always check the engine oil level and quality, as well as the oil pipe leading to the turbocharger and the oil return pipe.
   Replace, if necessary.

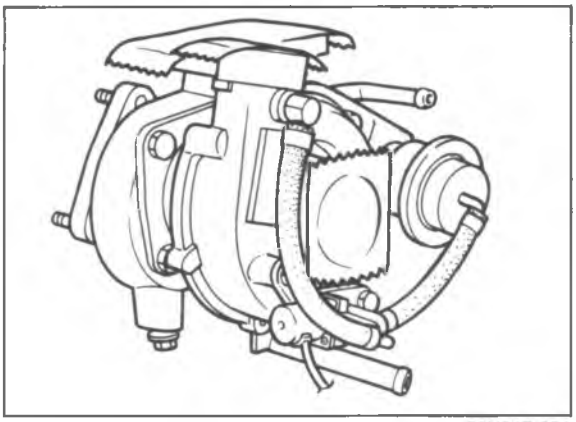

86U04B-054

2. Be careful of the following when removing, installing, and handling the turbocharger.
   (1) Do not drop the turbocharger.
   (2) Do not use actuator rod to carry the turbocharger
   (3) Put the turbocharger with the turbine shaft horizontal.
   (4) Do not bend the actuator mounting or rod.
   (5) Cover the intake, exhaust, and oil passages to prevent dirt or other material from entering.

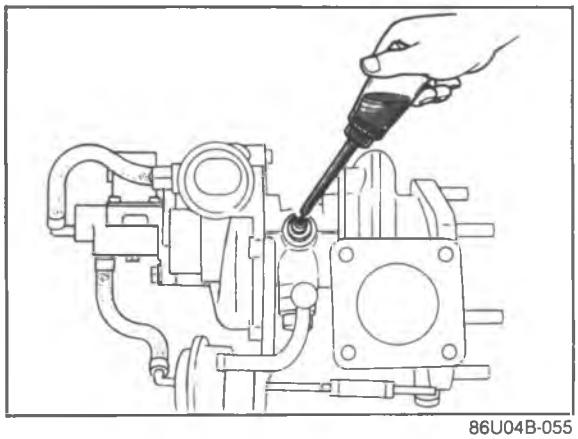

86U04B-055

3. When reinstalling the turbocharger, perform the following:
   (1) Remove all the gaskets and sealant.
   (2) Use new gaskets.
   (3) Supply **25 cc (1.5 cu in)** of oil in the oil passage of the turbocharger.

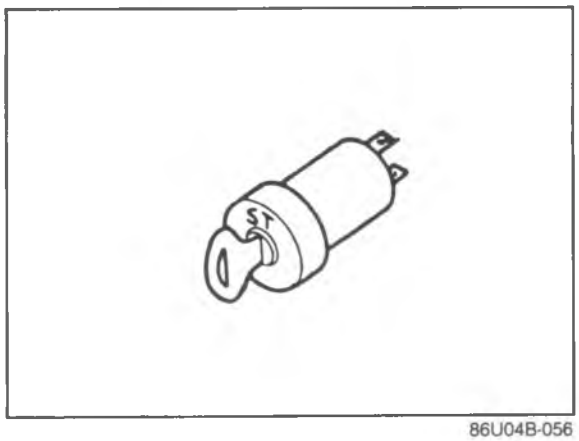

86U04B-056

4. After replacing the turbocharger, perform the following:
   (1) Disconnect the connector from the igniter.
   (2) Crank the engine for **20 seconds**.
   (3) Reconnect the connector.
   (4) Start the engine and run at idle for **30 seconds**.
   (5) Stop the engine and disconnect the negative battery cable and depress the brake pedal for at least 5 seconds to cancel the malfuction code.

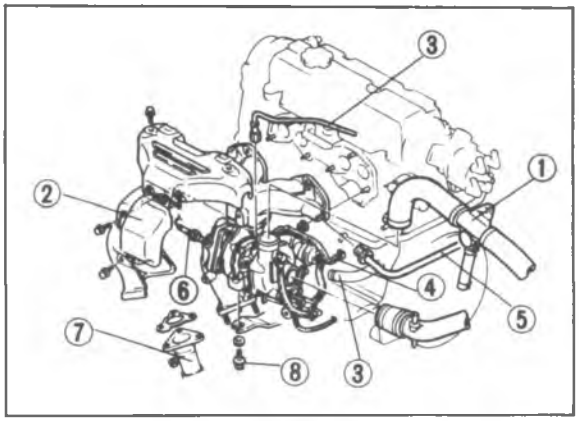

86U04B-057

Removal of turbocharger.

1. Cool the engine and drain the engine coolant.
2. Remove the parts in the order below.
   1) Air hoses and air bypass valve
   2) Insulators
   3) Oil pipe and oil return hose from turbocharger
   4) Water hoses from water pipe
   5) EGR pipe from exhaust manifold
   6) Oxygen sensor
   7) Front pipe
   8) Bolt

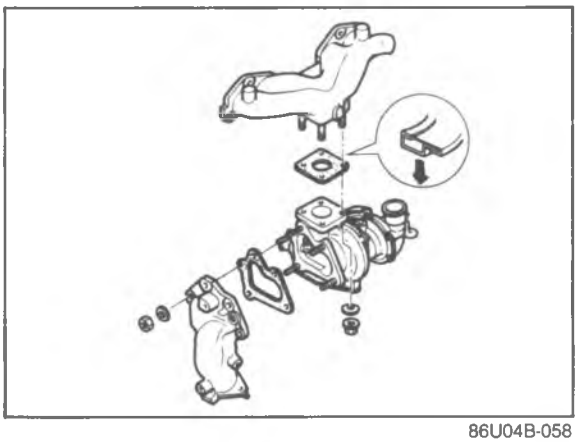

86U04B-058

3. Remove the turbocharger and exhaust manifold as an assembly.
4. Disassemble the exhaust manifold and turbocharger.

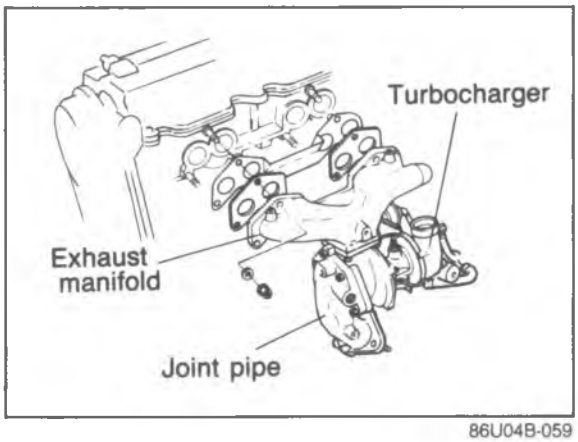

86U04B-059

Installation

1. Assemble the exhaust manifold and turbocharger.

   Tightening torque:
   Exhaust manifold — turbocharger;
   27—39 N·m (2.8—4.0 m-kg, 20—29 ft-lb)
   Turbocharger — joint pipe
   37—63 N·m (3.8—6.4 m-kg, 27—46 ft-lb)
   Turbocharger — turbocharger bracket
   31—41 N·m (3.2—4.2 m-kg, 23—30 ft-lb)

   Caution
   a) Replace gasket if bent or cracked.
   b) Use the specified nut to mount the turbocharger.

2. Install parts in the reverse order of removal.

86U04B-060

FUEL SYSTEM

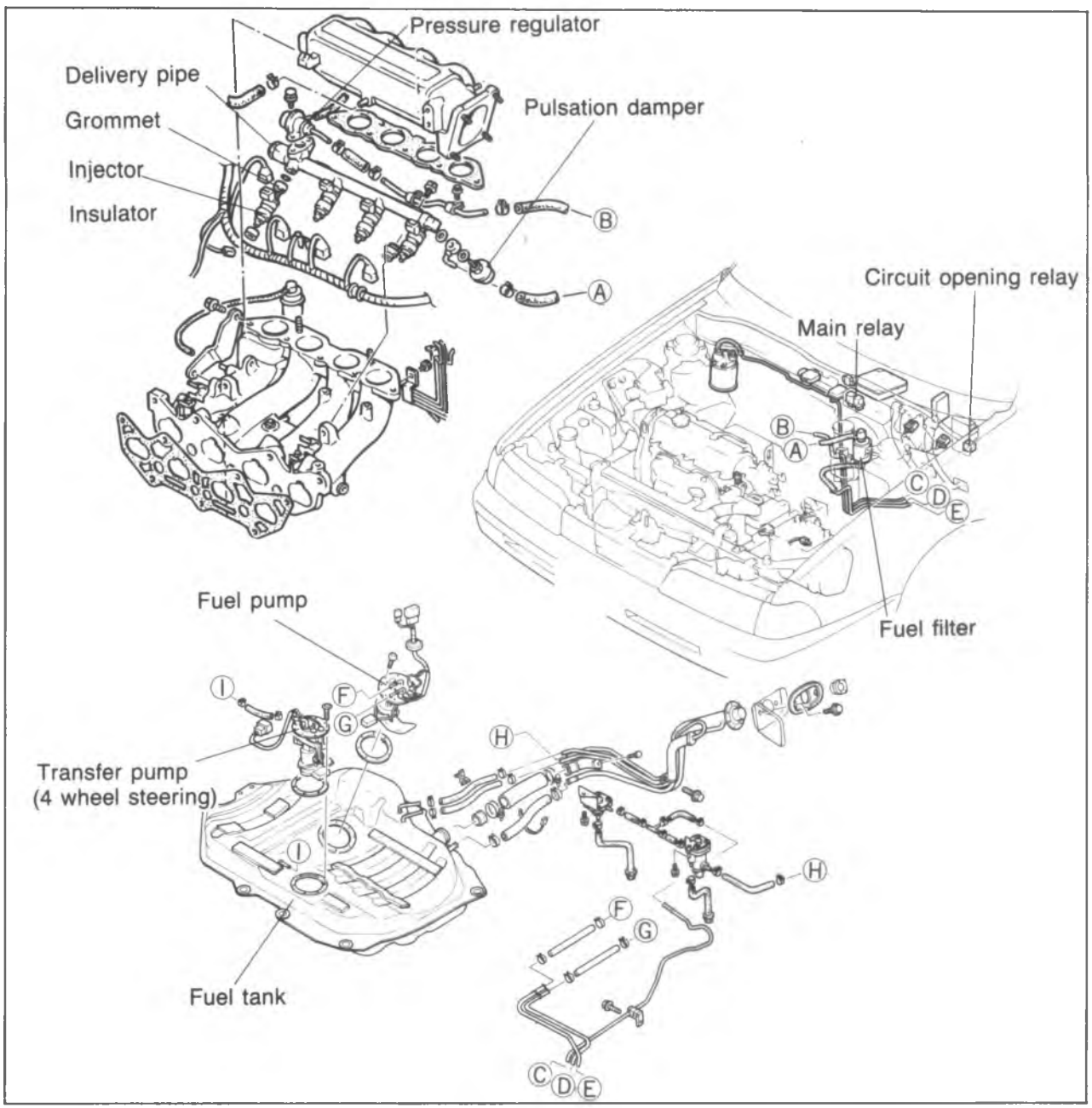

86U04B-061

This system supplies the fuel necessary for combustion at a constant pressure to the injectors. Fuel is metered and injected into the intake manifold according to the injection control signals from the engine control unit. It consists of the fuel pump, fuel filters, delivery pipe, pulsation damper, pressure regulator, injectors, fuel pump switch (incorporated in the air flow meter), and the circuit opening relay. The fuel pump is mounted in the fuel tank to minimize the operating noise of the fuel pump. The injectors are directly supplied with battery voltage through the main relay. The connector of the injectors is black to distinguish the injectors for the turbocharged engine from those of the non-turbocharged engine.

COMPONENT DESCRIPTIONS

Component	Function	Remarks	Application	
			New model	Previous model
Air flow meter	Detects amount of intake air; sends signal to control unit	Intake air temp sensor and fuel pump switch are integrated	○	○
Atmospheric pressure sensor	Detects atmospheric pressure; sends signal to control unit		○	○
Circuit opening relay	Voltage for fuel pump while engine running		○	○
Clutch switch	Detects in-gear condition; sends signal to control unit	Switch ON when clutch pedal depressed	○	○
EC-AT control unit	Detects N or P range; sends signal to control unit		○	X
Engine control unit	Detects signals from input sensors and switches; controls injector operation		○	○
Fuel filter	Filters particles from fuel		○	○
Fuel pump	Provides fuel to injectors	• Operates while engine running • Installed in fuel tank	○	○
G rotor and pick-up	Detects No.1 and No.4 cylinders TDC; sends signal to control unit	For determining fuel injection timing and ignition timing	○	X
Idle switch	Detects when throttle valve fully closed; sends signal to control unit	Installed on throttle body	○	○
Ignition switch (ST position)	Sends engine cranking signal to control unit		○	○
Inhibitor switch	Detects in-gear condition; sends signal to EC-AT control unit	Switch ON in "N" or "P" range	○	○
Injector	Injects fuel into intake port	• Controlled by signals from control unit • High-ohmic injector	○	○
Intake air thermo sensor	Detects intake air temperature; sends signal to control unit	Installed in air flow meter	○	○
Main relay	Supplies electric current to injectors and control unit		○	○
Ne rotor and pick-up	Detects crank angle at 30° intervals; sends signal to control unit	Engine speed signal	○	X
Neutral switch	Detects in-gear condition; sends signal to control unit	Switch ON when in-gear	○	○
Oxygen sensor	Detects Oxygen concentration; sends signal to control unit	Zirconia ceramic and platinum coating	○	○
Pressure regulator	Adjusts fuel pressure supplied to injectors		○	○
Pulsation damper	Absorbs fuel pulsation		○	○
Throttle sensor	Detects throttle valve opening angle; sends signal to control unit	Installed on throttle body	○	○
Water thermo sensor	Detects coolant temperature; sends signal to control unit		○	○
Water thermo switch	Detects radiator coolant temperature; sends signal to control unit	ON: above 17°C (63°F)	○	○

86U04B-062

TROUBLESHOOTING

Check the condition of the wiring harness and connectors before checking the sensors or switches.

Symptom \ Possible cause / Page		Air flow meter	Atmospheric pressure sensor	Oxygen sensor	Throttle sensor	Water thermo sensor	Water thermo switch	Fuel pump	Injector	Fuel pressure	Engine control unit terminal		
											20	3C 3E	3B
		4B—111	4B—118	4B—117	4B—112	4B—116	4B—116	4B—64	4B—66	4B—63	4B—107	4B—107	4B—107
Hard start or won't start (Cranks OK)			5			4		1	3				2
Engine stalls	While warming up	4				3			2	1		5	
	After warming up	1							3	2		4	
Rough idle	While warming up	4				3			2	1			
	After warming up	1	2						4	3			
Poor acceleration, hesitation, or lack of power		1			3				4	2			
Runs rough on deceleration		1							2		2		
Afterburn on deceleration		1							2				
Poor fuel consumption		5	6	4		3			2	1			
Engine stalls or rough after hot starting		1							3	2			
Fails emission test				1			2						

86U04B-063

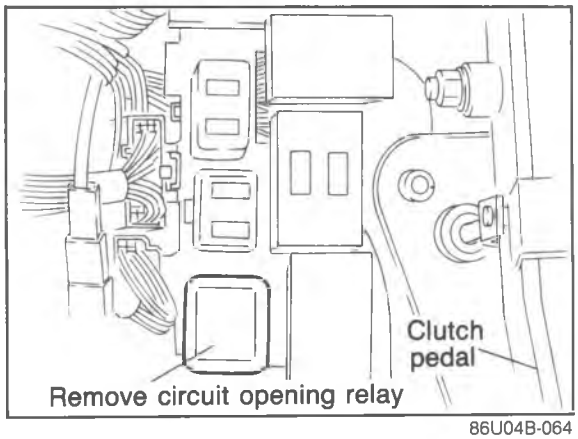

86U04B-064

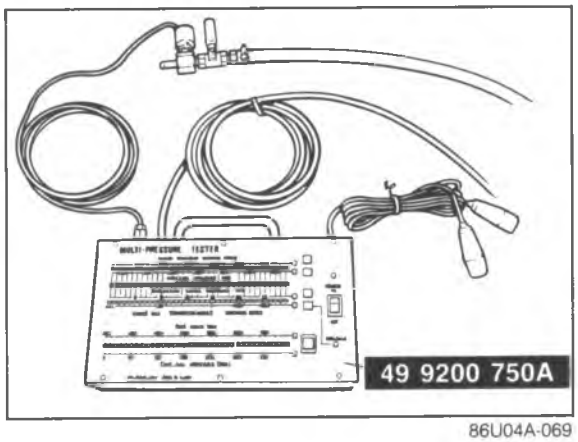

86U04A-069

FUEL PRESSURE RELEASE AND SERVICING FUEL SYSTEM

Fuel in the fuel system remains under high pressure even when the engine is not running.

a) Before disconnecting any fuel line, release the fuel pressure from the fuel system to reduce the possibility of injury or fire.
   1. Start the engine.
   2. Disconnect the circuit opening relay.
   3. After the engine stalls, turn OFF the ignition switch.
   4. Reconnect the circuit opening relay.

b) Use a rag as protection from fuel spray when disconnecting the hoses.
   Plug the hoses after removal.

c) When inspecting the fuel system, use the **SST**.

MULTI-PRESSURE TESTER (49 9200 750A)

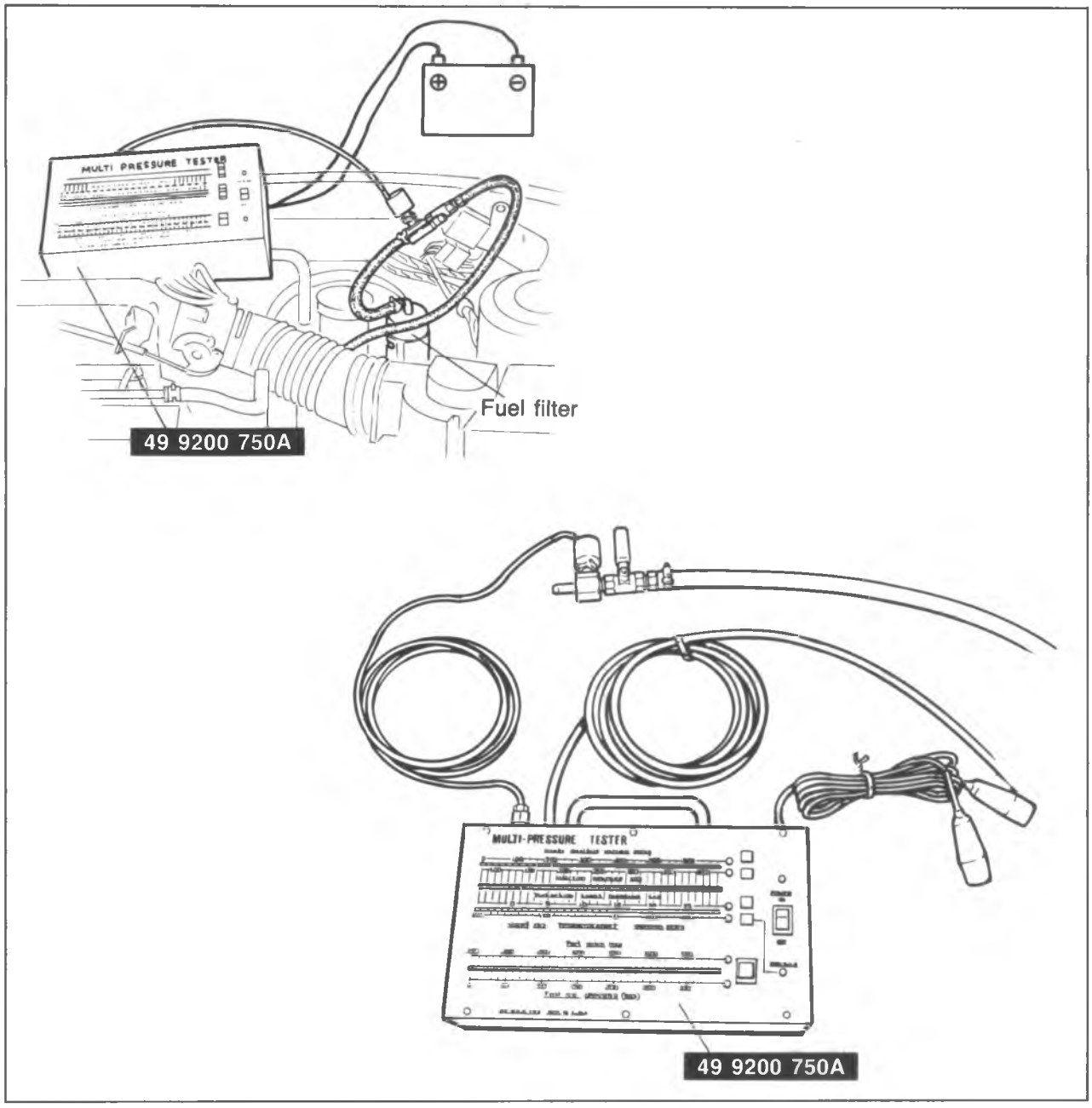

69G04A-099

The **MULTI-PRESSURE TESTER** (49 9200 750A) has been developed to check the fuel pressure and intake manifold vacuum. These can easily be inspected by setting the buttons on the tester.

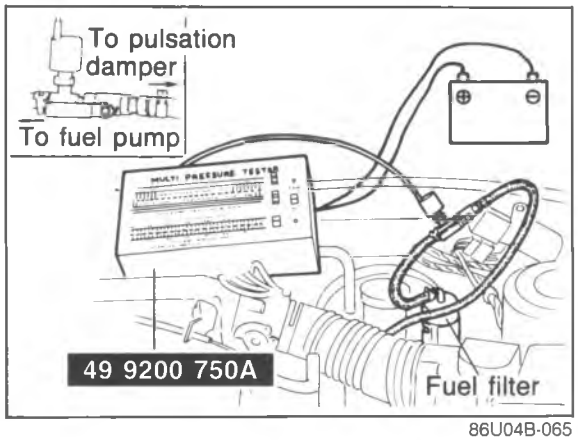

86U04B-065

How to Connect Multi-Pressure Tester

Warning
Before connecting the SST, release the fuel pressure from the fuel system to reduce the possibility of injury or fire. (Refer to page 4B—60.)

1. Disconnect the negative battery terminal.
2. Disconnect the fuel main hose from the fuel filter.
3. Connect the **SST** between the fuel main hose and fuel pump with the adapter.

Caution
Do not reverse the adapter connection.

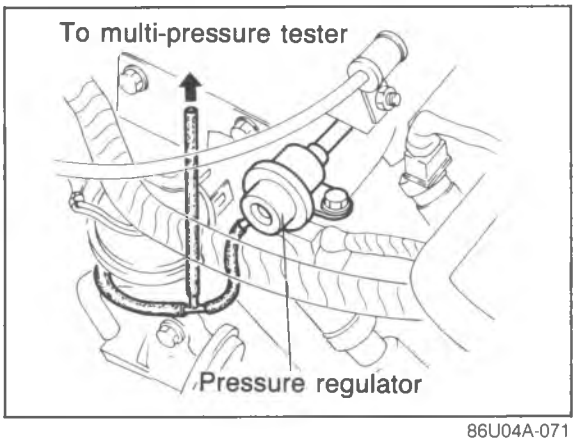

86U04A-071

4. Disconnect the vacuum hose from the pressure regulator control solenoid valve. Connect the **SST** vacuum hose with a three-way joint.
5. Connect the negative battery terminal.
6. Connect the **SST** to the battery.

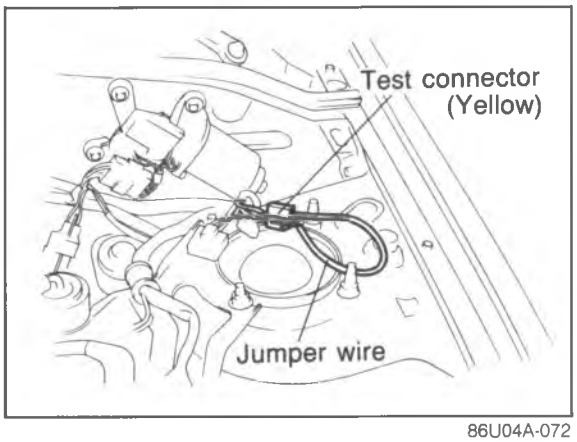

86U04A-072

7. Connect the terminals of the test connector (Yellow) with a jumper wire. Turn the ignition switch ON to operate the fuel pump.
8. Check for fuel leaks.

Caution
After checking for fuel leakage, turn the ignition switch OFF and disconnect the jumper wire from the test connector.

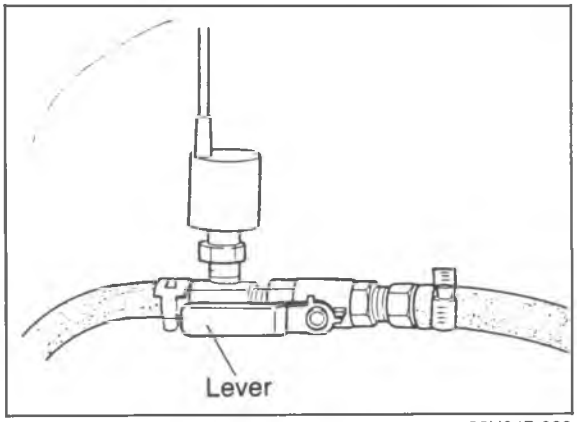

86U04B-066

FUEL PRESSURE

Note
a) When inspecting fuel pressure, use the SST. (Refer to page 4B—62).
b) Warm up the engine to normal operating temperature.

Injection Pressure

1. Set the lever on the adapter as shown in the figure.

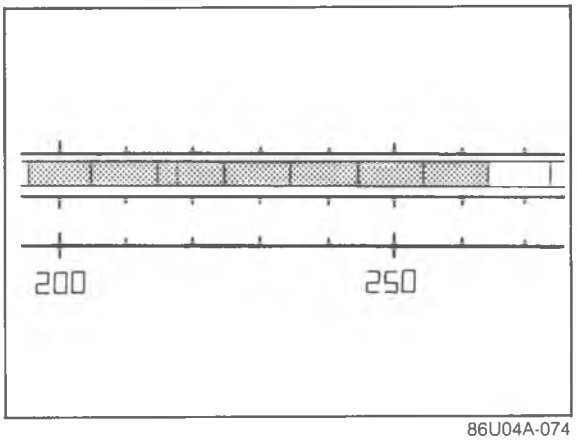

86U04A-074

2. Run the engine and measure the injection pressure at various speeds.

   Injection pressure: Approx. 235—275 kPa (2.4—2.8 kg/cm^2, 34—40 psi)

3. If not within specification, check the fuel pump pressure and fuel line pressure.

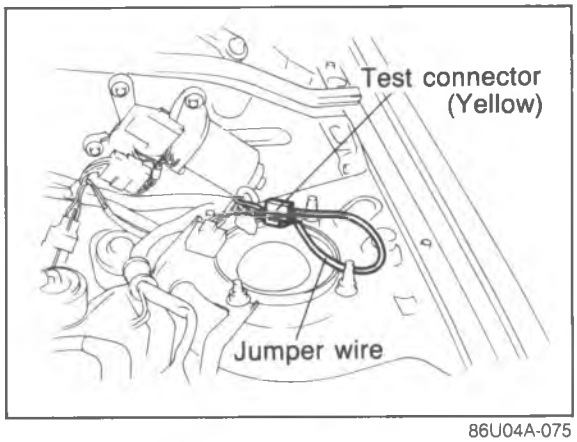

86U04A-075

Fuel Pump Pressure

1. Connect the terminals of the test connector (Yellow) with a jumper wire.
2. Turn the ignition switch ON to operate the fuel pump.
3. Set the lever on the adapter as shown in the figure.
4. Check the fuel pump pressure.

   Fuel pump pressure: 441—588 kPa (4.5—6.0 kg/cm^2, 64—85 psi)

5. If the fuel pump pressure is not within specification, check the following;

   No pressure
   •Fuel pump operation (Refer to page 4B—64.)
   Low pressure
   •Fuel pump feeding capacity (Refer to page 4B—65.)
   High pressure
   •Replace the fuel pump

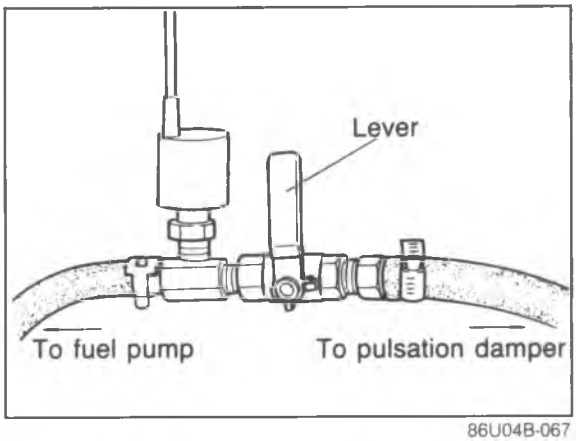

86U04B-067

6. After checking the fuel pump pressure, disconnect the jumper wire from the test connector.

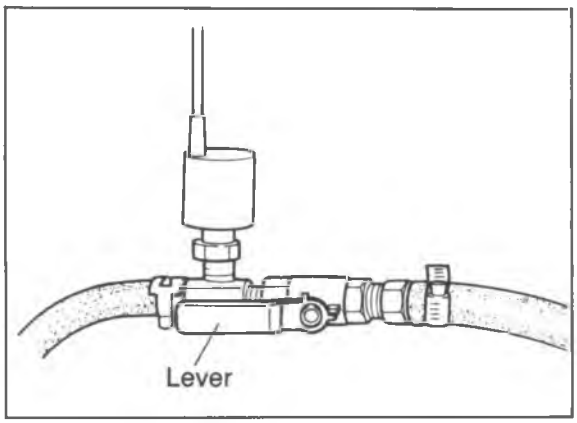

86U04A-077

Fuel Line Pressure

1. Start the engine and run it idle.
2. Set the lever on the adapter as shown in the figure.
3. Check the fuel line pressure.

   Fuel line pressure: Approx. 186—226 kPa (1.9—2.3 kg/cm^2, 27—33 psi)

4. If not within specification, check the vacuum hose.

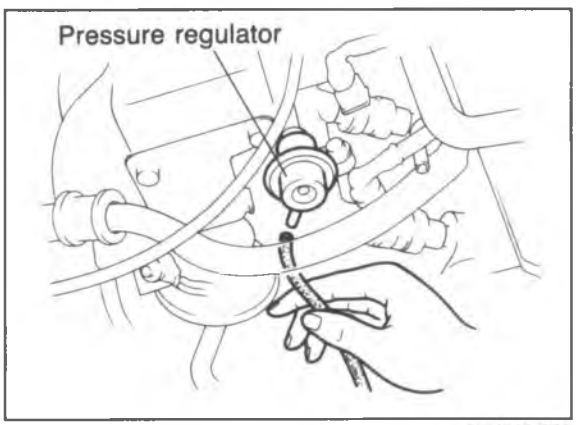

86U04A-078

5. Disconnect the vacuum hose from pressure regulator, and place a finger over the end of the hose.
6. Check the fuel line pressure.

   Fuel line pressure: 235—275 kPa (2.4—2.8 kg/cm^2, 34—40 psi)

7. If not within specification, replace the pressure regulator.
8. Connect the vacuum hose to pressure regulator.

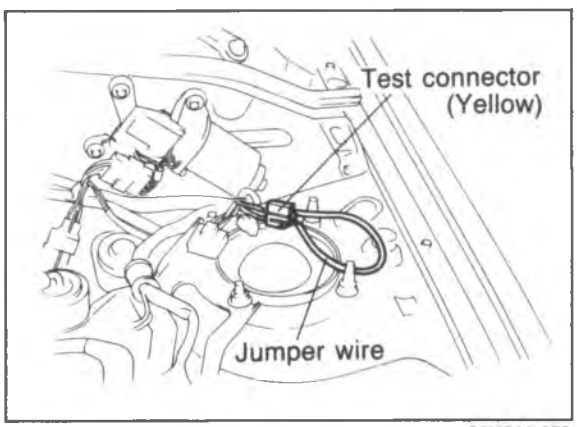

86U04A-079

FUEL PUMP

Operation Test

1. Connect a jumper wire to the check connector (Yellow).
2. Remove the fuel filler cap.
3. Turn the ignition switch ON.
4. Listen for operational sound of the fuel pump at the filler inlet.
5. Install the fuel filler cap.

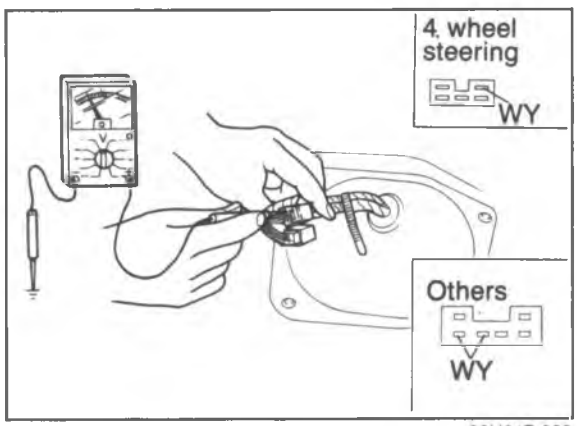

86U04B-068

6. If no sound was heard, check the voltage at the feel pump connector (WY wire and a ground).

   Voltage: 12V

7. If the voltage is normal, replace the fuel pump.
8. If not correct, check the circuit opening relay (Refer to page 4B—102) and its circuits.
9. Disconnect the jumper wire.

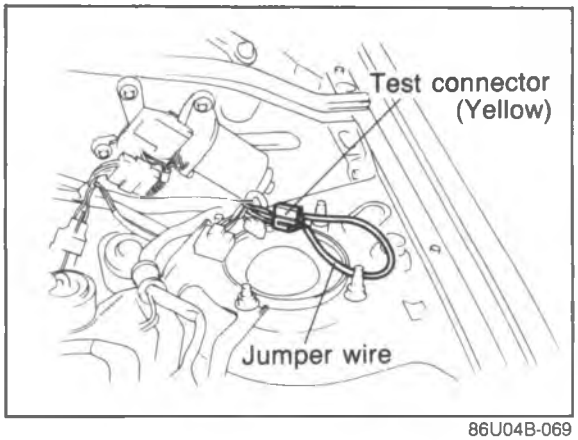

86U04B-069

Volume Test

Warning
Before performing following procedures, release the fuel pressure to reduce the possibility of injury or fire. (Refer to page 4B—60)

1. Connect a jumper wire to test connector (Yellow).
2. Disconnect the fuel return hose from fuel return pipe.

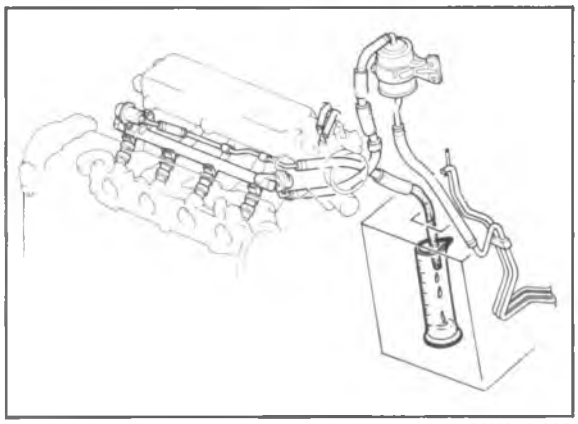

86U04A-082

3. Turn the ignition switch ON for 10 seconds, and check the feeding capacity with graduated cylinder.

   Feeding capacity:
   220 cc (13.4 cu in)/10 sec. min.

4. If not within specification, check the fuel filter, and fuel line.
5. Turn the ignition switch OFF and disconnect the jumper wire.

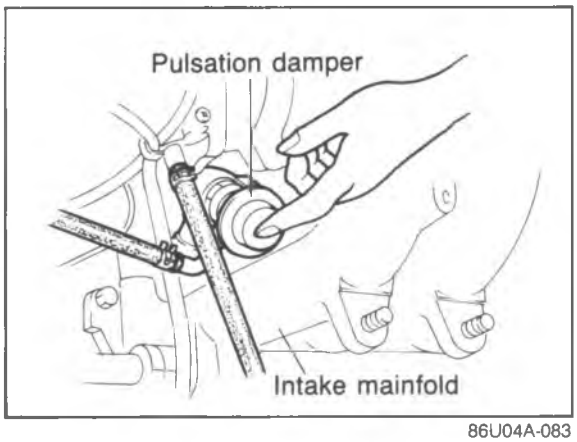

86U04A-083

PULSATION DAMPER

1. Run the engine at idle.
2. Place a finger on the screw of the pulsation damper head.
3. Check that pulsation is felt.

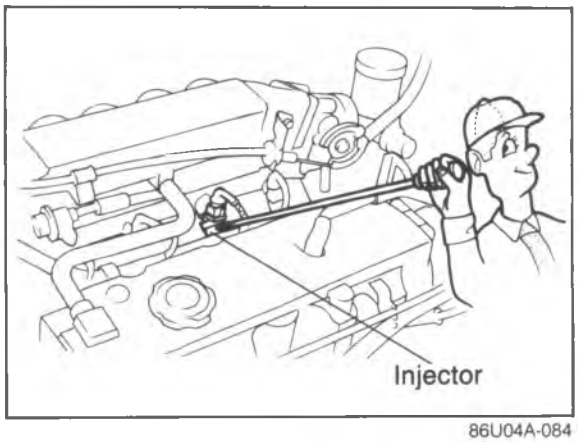

86U04A-084

INJECTOR

On-vehicle Inspection

Engine does not start

Perform "Quick Inspection for Electrical Signal" below.

Engine runs

1. Warm up the engine and run it at idle.
2. Listen for operational sound of the injector with a screwdriver or a sound scope.

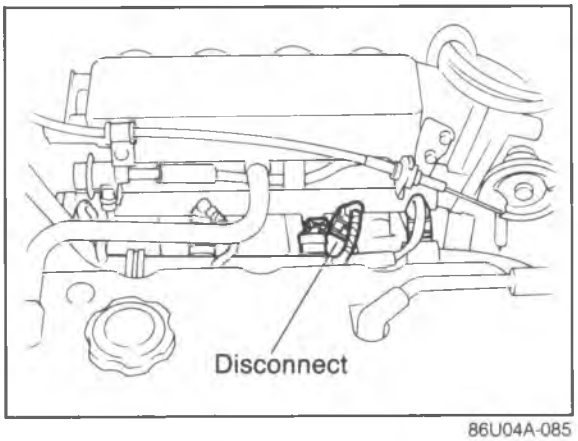

86U04A-085

3. Disconnect the connector from each injector respectively.
4. Check that the engine speed decreases about **100—200 rpm** each time.
5. If not correct, check the following:

No operating sound and no speed drop
Perform "Quick Inspection for Electrical Signal" below.
No speed drop only
Injector resistance
Injection volume of injector

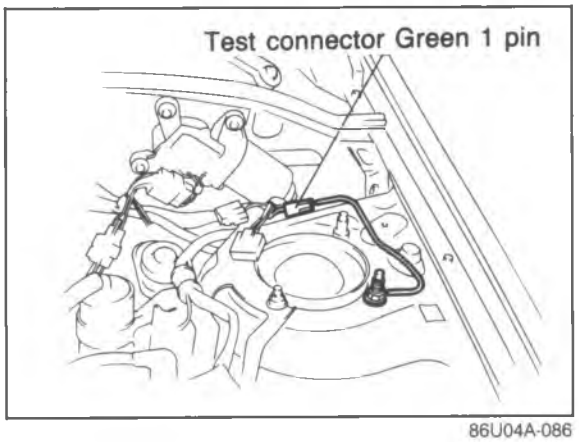

86U04A-086

Quick Inspection for Electrical Signal

1. Ground the test connector (Green, 1-pin) with a jumper wire.

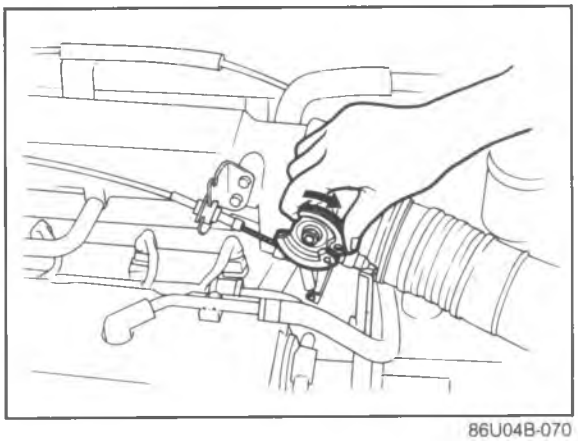
86U04B-070

2. Turn the ignition switch ON.
3. Open the throttle valve and check for a "click" at the injector with a screwdriver or sound scope as it is opened.
4. If nothing is heard, check the injector wiring circuit.
5. If nothing is heard at all injectors, check the main relay (Refer to page 4B—102) and circuit.

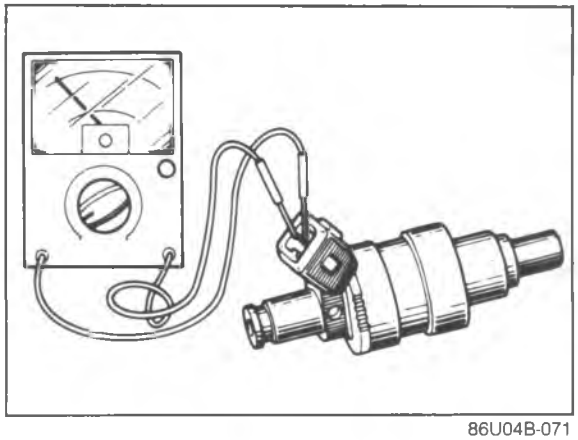

86U04B-071

Inspection
There are 3 inspections which must be performed for the injectors.

Resistance
1. Remove the injectors from the engine. (Refer to page 4B—75.)
2. Check the resistance of each injector with an ohmmeter.
3. If not correct, replace the injector.

Resistance: 11—15 Ω

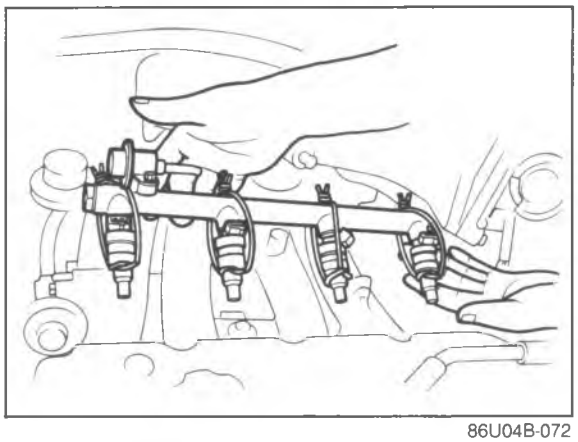

86U04B-072

Fuel leakage test and volume test
1. Lift the dynamic chamber upward.
2. Remove the injectors and delivery pipe. (Refer to page 4B—75 and 77.)
3. Affix the injectors to the delivery pipe with wire.

Caution
Affix the injectors firmly to the delivery pipe so that no movement of the injectors is possible.

Warning
Be extremely careful when working with fuel. Always work away from sparks or open flames.

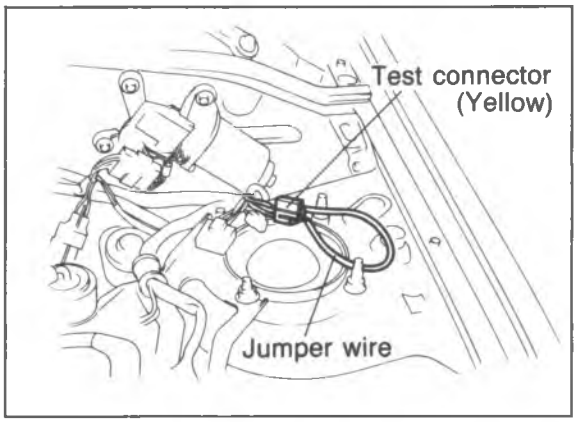

86U04A-090

4. Connect the terminals of the fuel pump test connector with a jumper wire. Turn the ignition switch ON.
5. Check that no fuel leaks from the injector nozzles.

Note
After 1 minute a drop of fuel from the injector is acceptable.

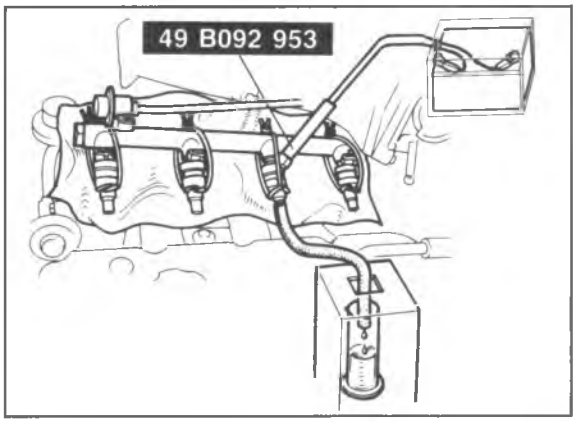

86U04B-073

6. Connect the **SST** to the battery and injector.
7. Check the injection volume with a graduated container.

Injection volume:
Approx. 73—90 cc (4.45—5.49 cu in) /15 sec.

Caution
When using the SST, make sure of the SST number and use correct one.

8. If not correct, replace the injectors.

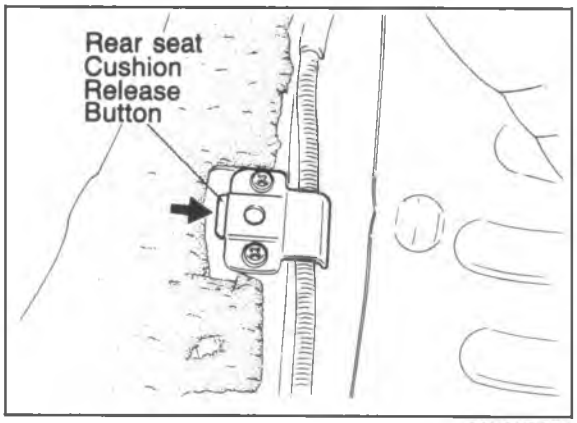

86U04B-074

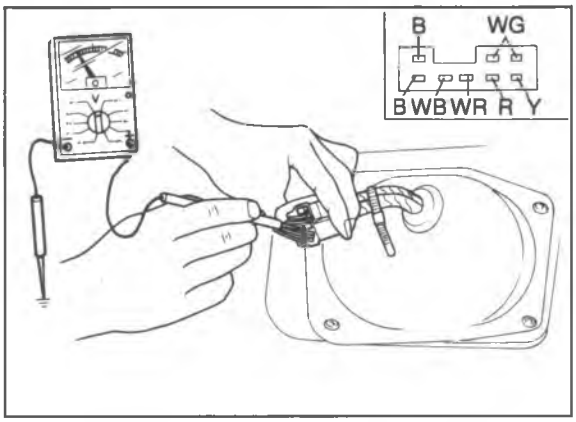

86U04B-075

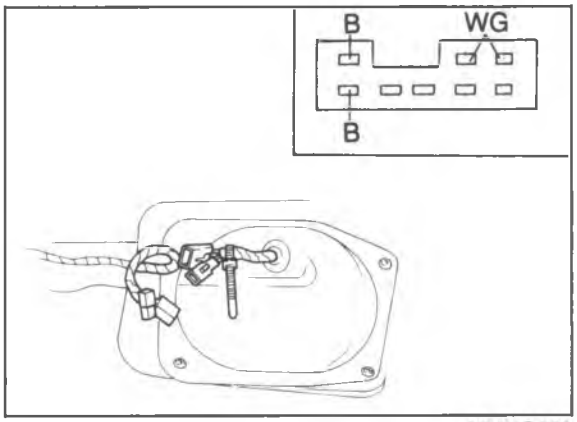

86U04B-076

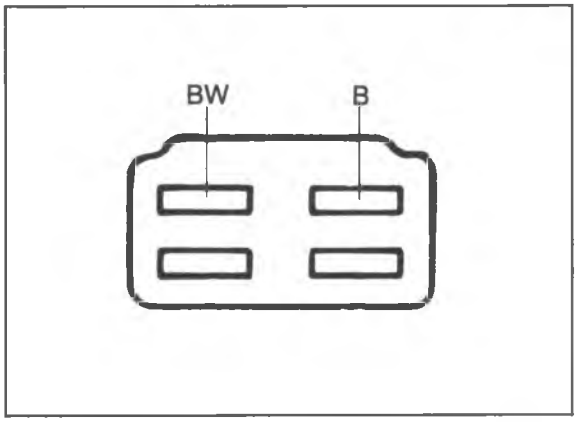

86U04B-077

TRANSFER PUMP CONTROL SYSTEM (4 WHEEL STEERING)

1. Remove the rear seat.
2. Remove the fuel filler cap.
3. Turn the ignition switch ON.

Note

a) The tank should be more than 1/3 full.

b) Due to the delay timer, transfer pump operation begins approx. 10 sec. after the ignition switch is turned ON.

4. Listen for the operational sound of the transfer pump.
5. Install the fuel filler cap.
6. If no sound was heard, check the voltage at the transfer pump connector.

Terminal (wire)	Voltage
A, C (WG)	Approx. 12V
I, J (B)	0V

7. If the voltages are correct, replace the transfer pump.
8. If not correct, disconnect the transfer pump connector.
9. Check the voltage at the terminals below.

Terminal (wire)	Voltage
A, C (WG)	Approx. 12V
I, J (B)	0V

8. If the voltages are correct, replace the transfer pump.

9. If not correct, check the voltage at terminals of the fuel pump control unit below.

Terminal (wire)	Voltage
A (B)	Approx. 12V
C (BW)	0V

10. If the voltages are correct, replace the fuel pump control unit.
11. If not correct, repair the power supply circuit and the ground circuit for the fuel pump control unit.

PRESSURE REGULATOR CONTROL SYSTEM

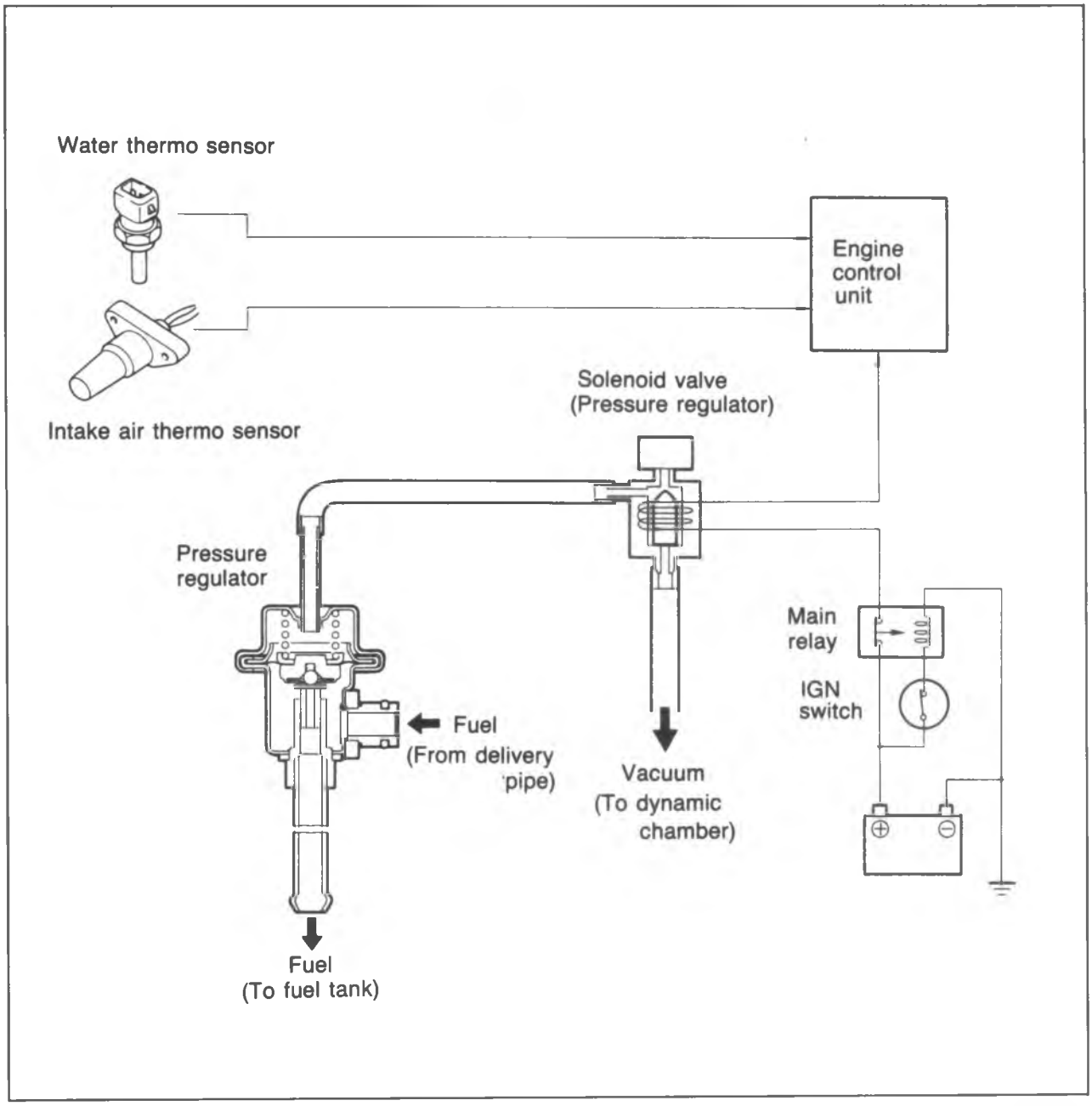

86U04A-092

To prevent percolation of the fuel during idle after the engine is restarted, vacuum is cut to the pressure regulator, increasing the fuel pressure.

Specified time: Approx. 120 sec.
Operating condition: Coolant temperature — above 70°C (158°F)
Intake air temperature — above 20°C (68°F)

COMPONENT DESCRIPTIONS

Component	Function	Remarks	Application	
			New model	Previous model
Engine control unit	Detects signals from input sensors and switches; controls solenoid valve (Pressure regulator control)		○	○
Ignition switch (ST position)	Sends engine cranking signal to control unit		○	○
Intake air thermo sensor	Detects intake air temperature; sends signal to control unit	Installed in air flow meter	○	○
Ne rotor and pick-up	Detects crank angle at 30° intervals; sends signal to control unit	Engine speed signal	○	X
Pressure regulator	Adjusts fuel pressure supplied to injectors		○	○
Solenoid valve (Pressure regulator control)	Controls vacuum line to pressure regulator	Closes vacuum line when hot	○	○
Throttle sensor	Detects throttle valve opening angle; sends signal to control unit	Installed on throttle body	○	○
Water thermo sensor	Detects coolant temperature; sends signal to control unit		○	○

86U04B-078

TROUBLESHOOTING

Check the condition of the wiring harness and connections before checking the sensors or switches below.

Note
Make the system inspection first. If no problem is found, continue with the next system inspection of the Troubleshooting Guide. (Refer to pages 4B—8 and 9.)

Possible cause / Page / Sympton	Solenoid valve (Pressure regulator control)	Water thermo sensor	Intake air thermo sensor	Throttle sensor	Engine control unit terminal 2K	System inspection
	4B—72	4B—116	4B—111	4B—112	4B—106	4B—71
Engine stalls or rough after hot starting	2	3	4	5	6	1

86U04B-079

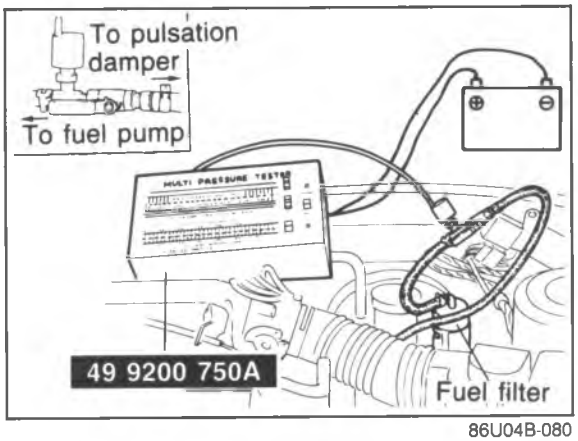

86U04B-080

System Inspection

1. Connect the **SST** to the engine. (Refer to page 4B—62.)
2. Start the engine.

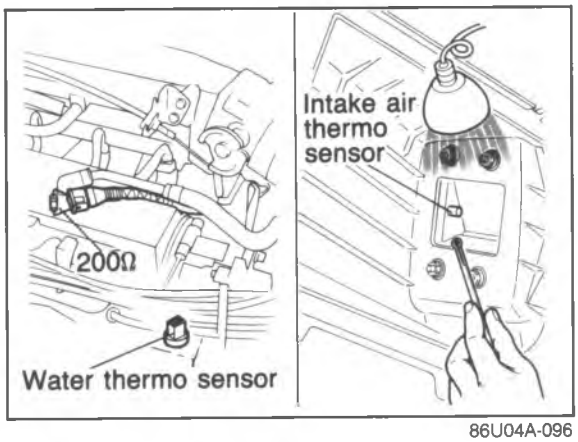

86U04A-096

3. Warm up the engine to normal operating temperature and stop the engine.

   Warning
   Be careful when disconnecting the water thermo sensor connector because the surrounding area is very hot.

4. Disconnect the water thermo sensor connector. Connect a resistor (**200 Ω**) to the sensor connector.
5. Lift the air cleaner upper cover assembly.
6. Heat the intake air thermo sensor to **above 30°C (86°F)**.

Operating time	Fuel line pressure kPa (kg/cm², psi)
After starting: for 120 sec.	235—275 (2.4—2.8, 34—40)
After 120 sec.	186—226 (1.9—2.3, 27—33)

86U04A-097

7. Restart the engine.
8. Check the fuel line pressure and operating times as shown in the chart.

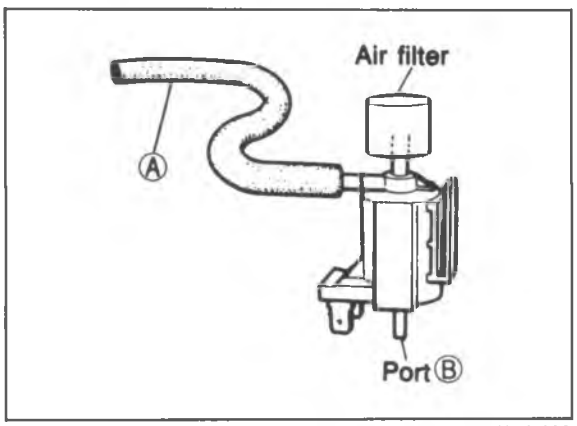

86U04A-098

Solenoid Valve (Pressure Regulator Control) Inspection

1. Disconnect the vacuum hose from the solenoid valve and vacuum pipe.
2. Blow through the solenoid valve from vacuum hose A.
3. Check that air flows from port B.

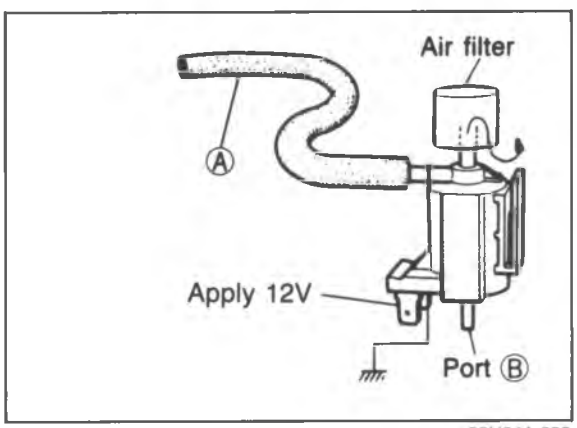

86U04A-099

4. Disconnect the solenoid valve connector.
5. Connect 12V and a ground to the terminals of the solenoid valve.
6. Blow through the solenoid valve from the vacuum hose A.
7. Check that air flows from the valve air filter.

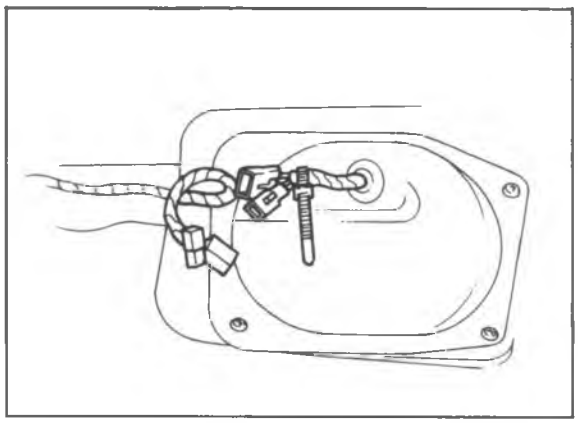

86U04B-081

REPLACEMENT

Caution

A) Before performing the following procedure, release the fuel pressure from the fuel system to reduce the possibility of injury or fire (Refer to page 4B—60).

b) When servicing the fuel system, keep sparks, cigarettes, and open flames away from the fuel.

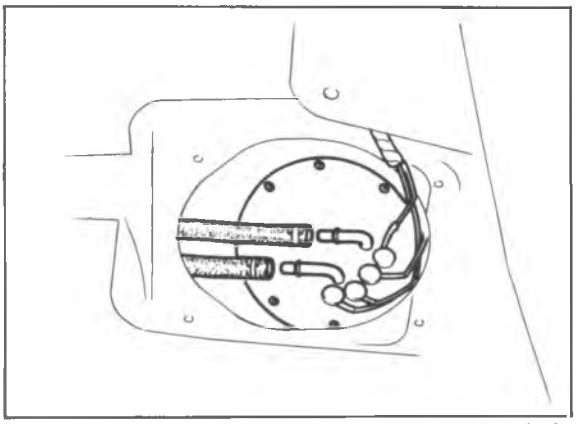

86U04A-101

Fuel Pump

1. Remove the rear seat and disconnect the fuel pump connector.
2. Remove the service hole cover.
3. Disconnect the fuel hoses.
4. Remove the fuel pump and fuel tank gauge assembly.

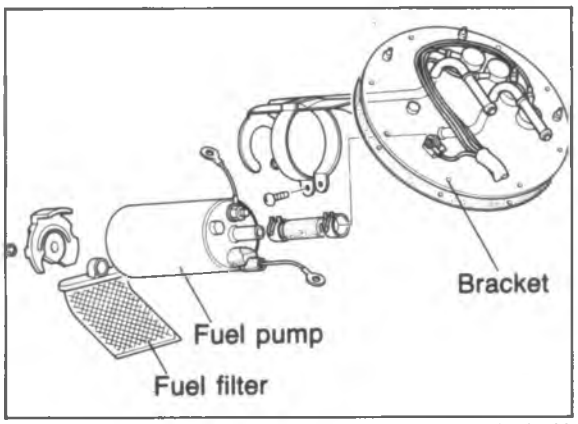

86U04A-102

5. Replace the fuel pump.

Caution

Secure the fuel pump terminals and fuel hoses securely.

6. Install in the reverse order of removal.

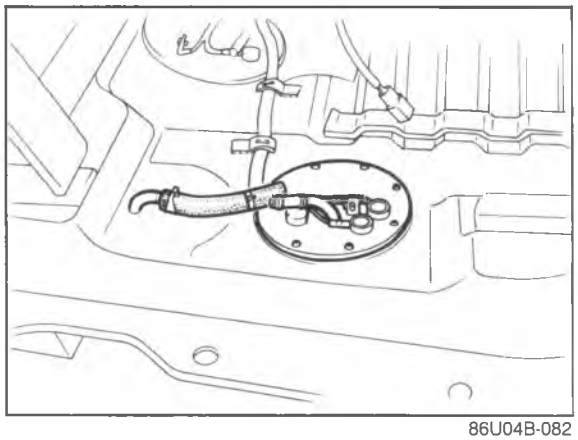

86U04B-082

Transfer Pump

1. Remove the fuel tank. (Refer to page 4B—79.)
2. Disconnect the fuel hoses from the transfer pump.

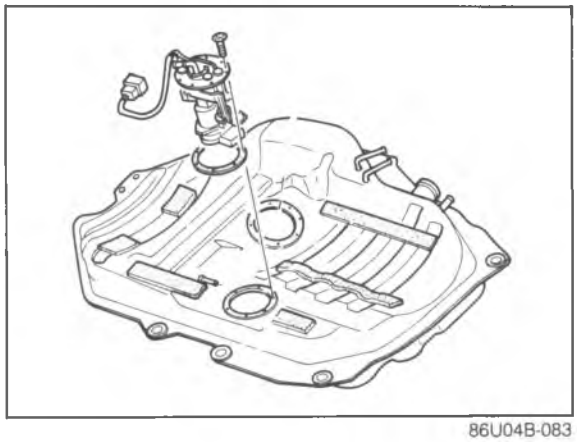

86U04B-083

3. Remove the transfer pump.
4. Install in the reverse order of removal.

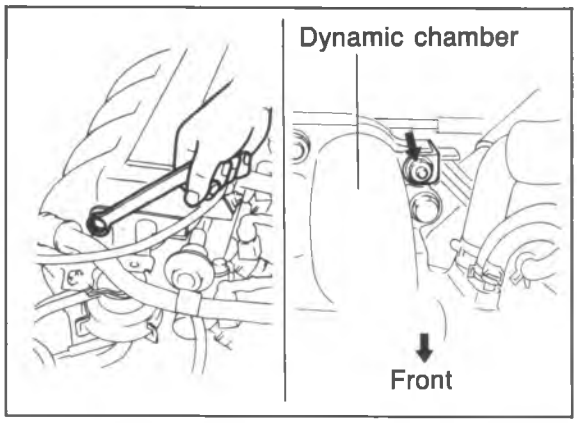

86U04B-084

Injector

1. Remove the wiring harness bracket.
2. Disconnect the vacuum pipe mounting bolts.

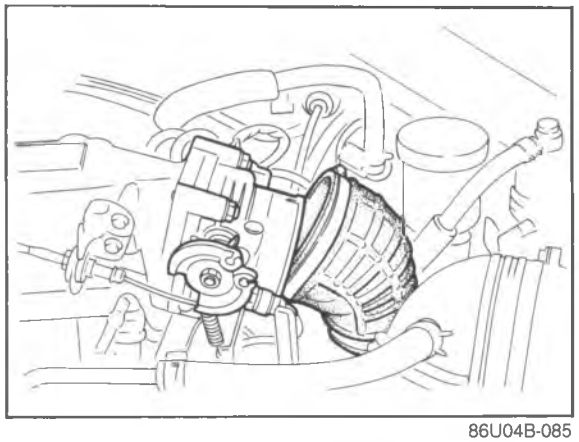
86U04B-085

3. Disconnect the air hose from the throttle body.

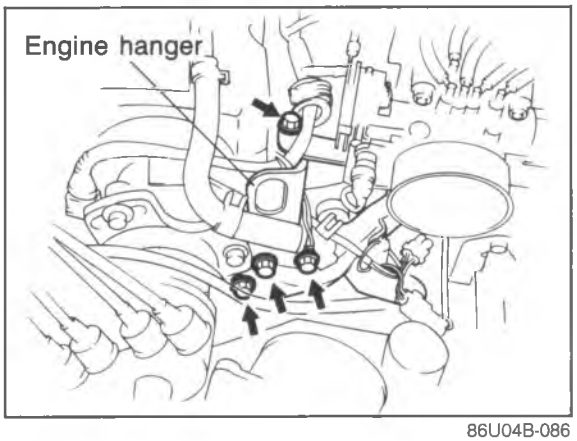

86U04B-086

4. Remove the engine hanger.
5. Remove the dynamic chamber mounting bolts and nuts.

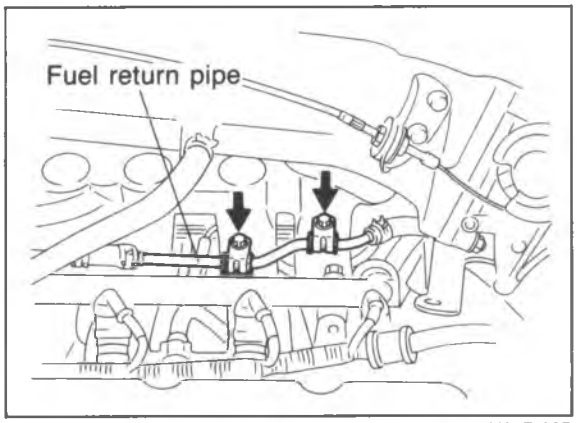

86U04B-087

6. Lift the dynamic chamber.
7. Disconnect the fuel return pipe bracket from the intake manifold.
8. Disconnect the injector connectors.
9. Remove the delivery pipe along with the pressure regulator and pulsation damper.

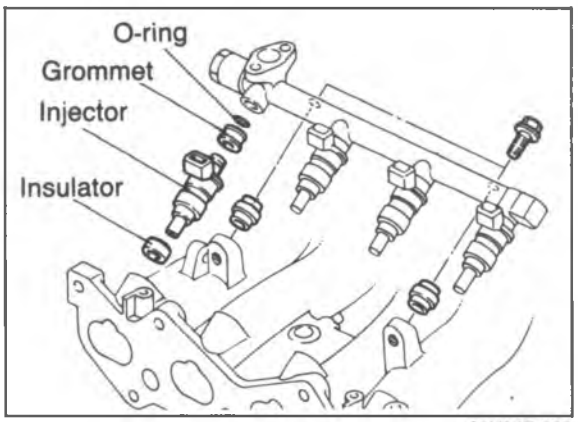

86U04B-088

10. Remove the grommets, injectors, and insulators.
11. Install in the reverse order of removal, referring to installation note.

Tightening torque:

Delivery pipe	**19—25 N·m**
Dynamic chamber	**(1.9—2.6 m-kg,**
Engine hanger	**14—19 ft-lb)**

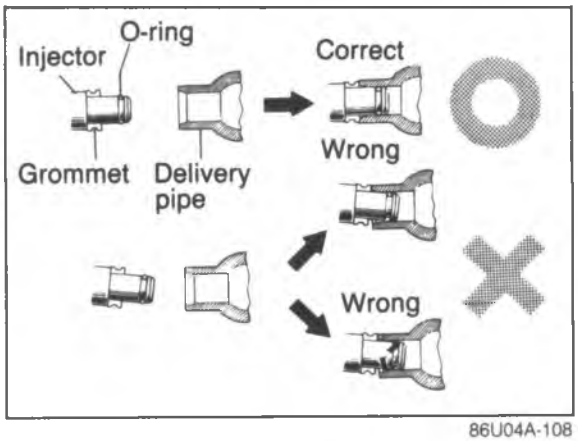

86U04A-108

Installation note
Injector

1. Use new O-rings.
2. Apply a small amount of engine oil to the O-rings when installing.

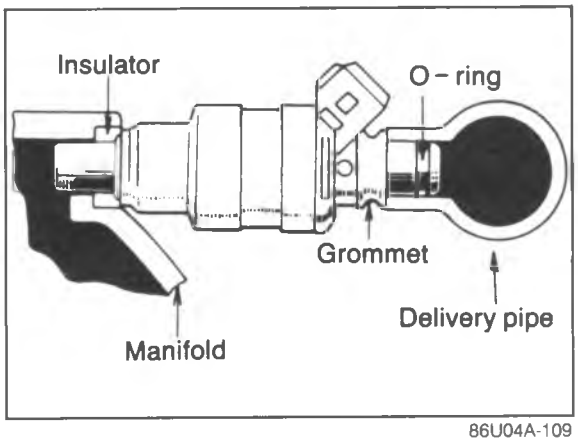

86U04A-109

3. Install the injectors and the injector insulators.

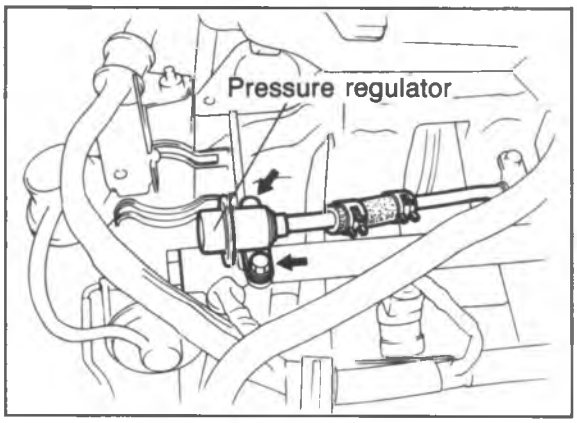

86U04B-089

Delivery Pipe

1. Perform steps 1 to 7 of removal procedure for injectors. (Refer to page 4B—75.)
2. Remove the pulsation damper, pressure regulator, and injectors.

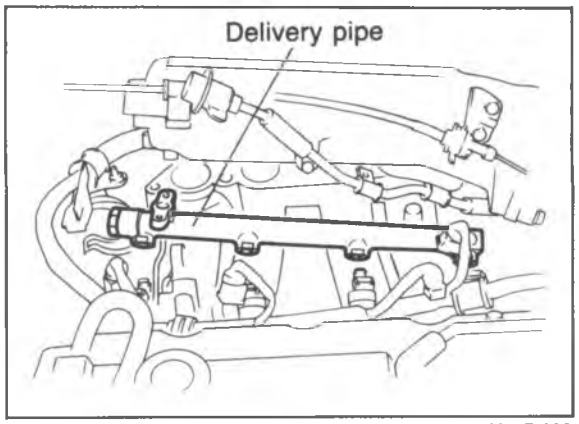

86U04B-090

3. Replace the delivery pipe.
4. Install in the reverse order of removal, referring to installation note.

Tightening torque:

Pressure regulator	**8—11 N·m (0.8—1.1 m-kg, 69—95 in-lb)**
Delivery pipe	**19—25 N·m (1.9—2.6 m-kg, 14—19 ft-lb)**
Engine hanger	
Dynamic chamber	

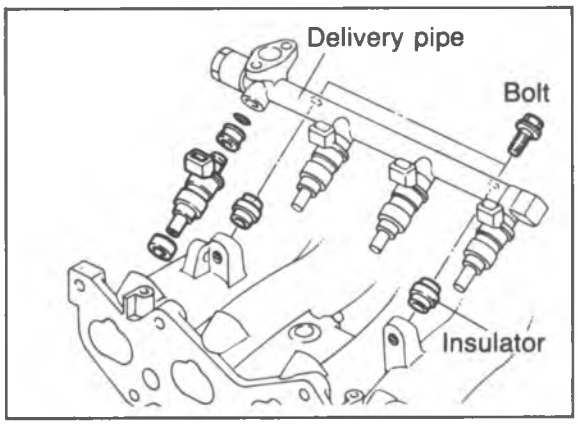

86U04B-091

Installation note

Insulator

Install the insulators between the intake manifold and delivery pipe.

Injector

Refer to page 4B—76.

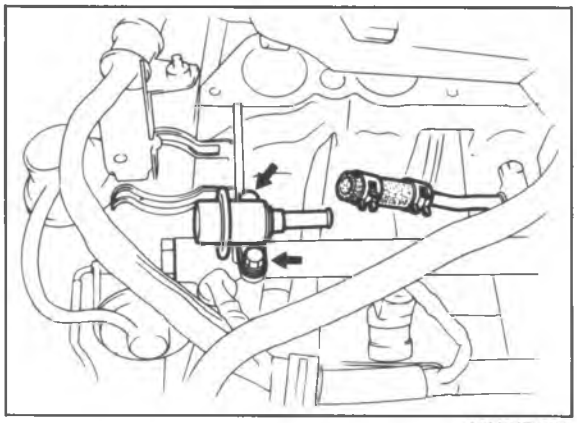

86U04B-092

Pressure Regulator

1. Perform steps 1 to 8 of removal procedure for the injector. (Refer to page 4B—75.)
2. Disconnect the vacuum hose and fuel return hose.
3. Remove the pressure regulator.
4. Install in the reverse order of removal.

Tightening torque:
8—11 N·m (0.8—1.1 m-kg, 69—95 in-lb)

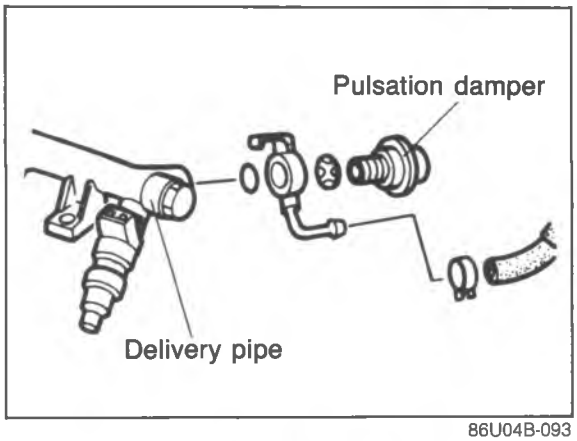

86U04B-093

Pulsation Damper

1. Perform steps 1 to 7 of removal procedure for the injectors. (Refer to page 4B—75.)
2. Remove the pulsation damper.
3. Install in the reverse order of removal.

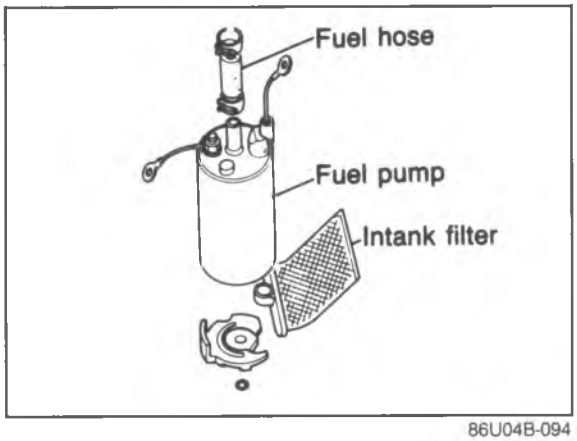

86U04B-094

Fuel Filter
Low pressure side
Refer to page 4B—73.

High pressure side
The fuel filter must be replaced at the intervals outlined in the maintenance schedule.

Warning
Always work away from sparks or open flames.

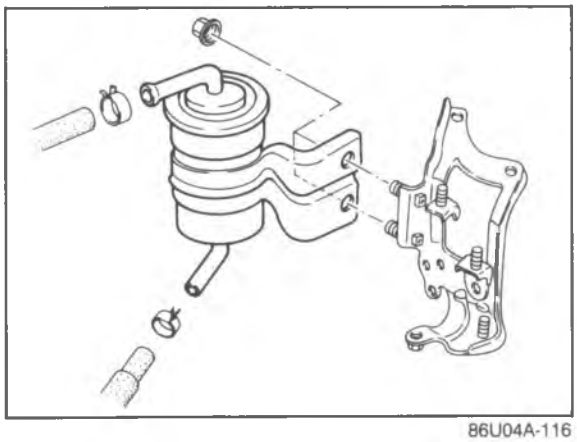

86U04A-116

1. Disconnect the fuel hoses from the fuel filter.
2. Remove the fuel filter and the bracket.
3. Install a new filter and the bracket.
4. Connect the fuel hoses.

Note
When installing the filter, push the fuel hoses fully onto the fuel filter and secure the hoses with spring clamps.

FUEL TANK
Removal

Caution

a) Before performing the following procedure, release the fuel pressure from the fuel system to reduce the possibility of injury or fire. (Refer to page 4B—60)

b) When removing the fuel tank, keep sparks, cigarettes, and open flames away from the fuel tank.

Remove in the sequence shown in the figure.

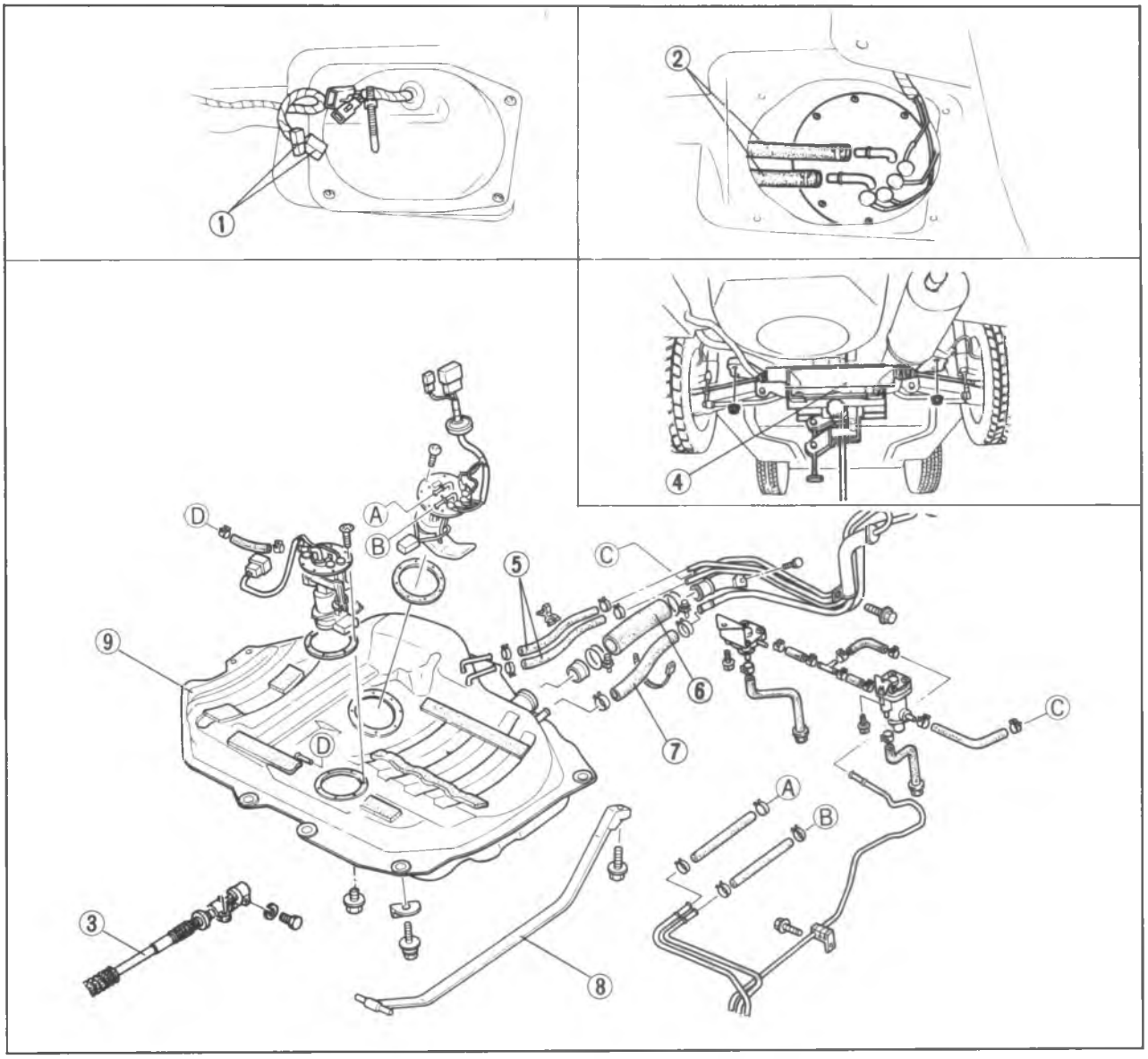

86U04B-095

Note

Drain the fuel from the fuel tank before removing the tank.

1. Fuel pump connectors
2. Fuel hoses
3. Steering angle transfer shaft (4-wheel steering) (Refer to section 10)
4. Cross member (4-wheel steering)
5. Evaporative hoses
6. Fuel filler hose
7. Breather hose
8. Fuel tank strap
9. Fuel tank

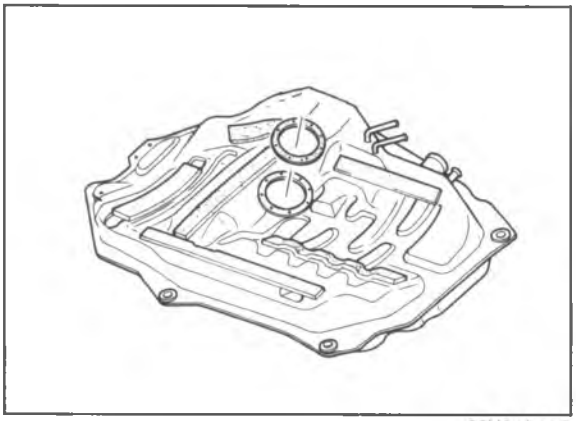

86U04A-118

Inspection

1. Check the fuel tank for cracks and corrosion.
2. If any defect is found, repair or replace the tank.

Warning

Before repairing, clean the fuel tank thoroughly with steam to sufficiently remove all explosive gas.

Installation

Install in the reverse order of removal, referring to the installation note.

Torque Specifications

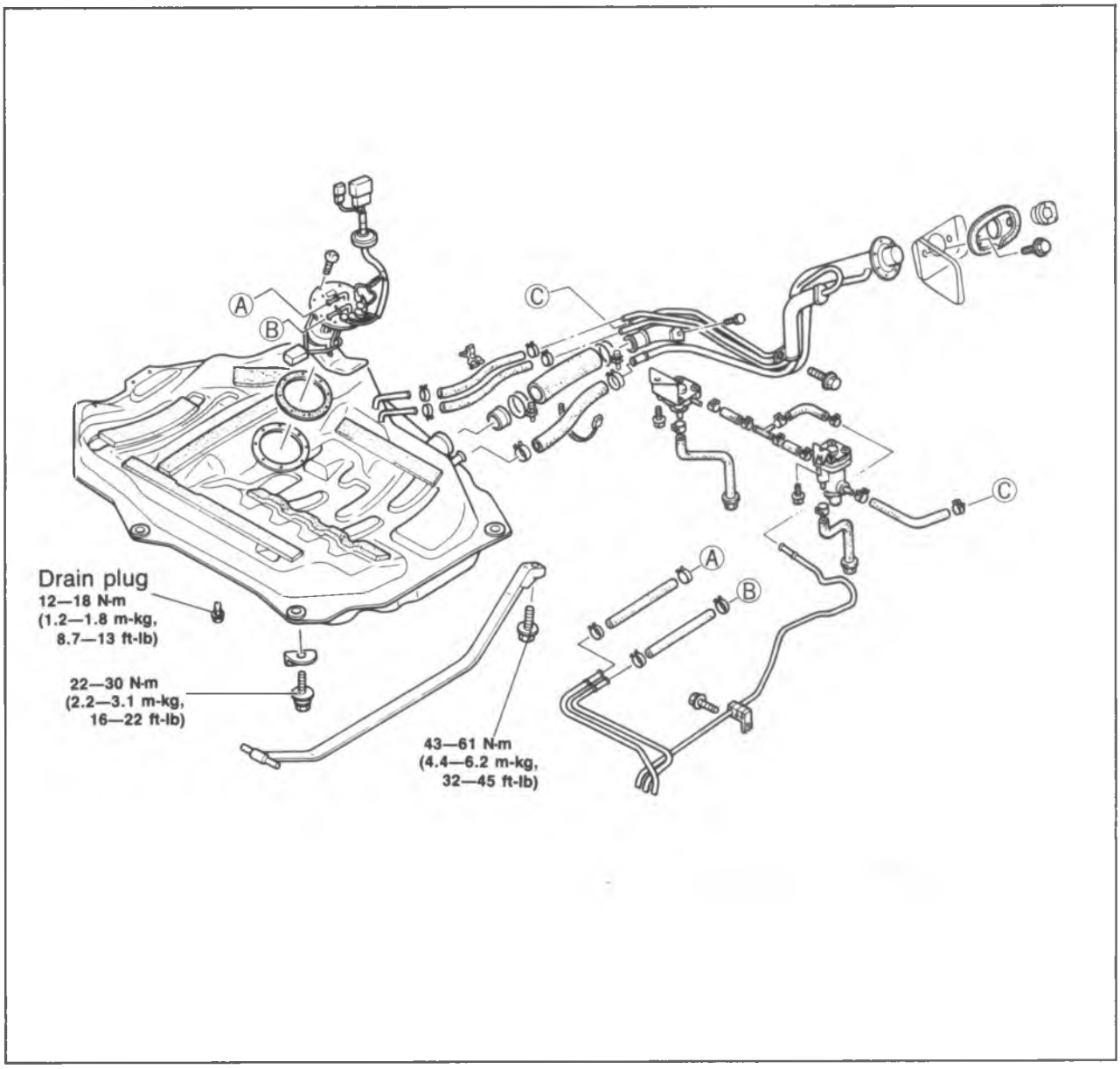

86U04A-119

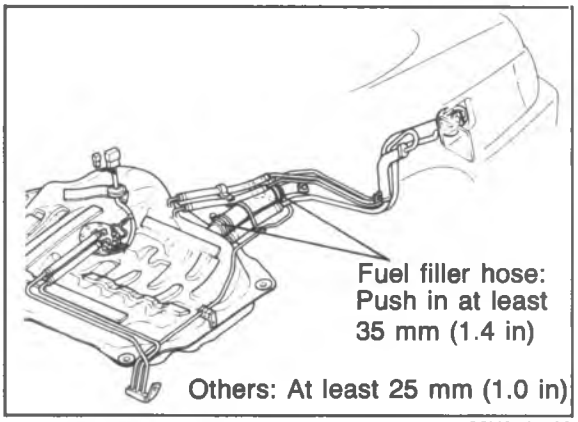

86U04A-120

Installation note
Hoses

1. Push the hose ends of the main fuel hose, fuel return hose and evaporation hoses onto the fuel tank fittings **at least 25 mm (1.0 in)**.
2. Push the fuel filler hose ends onto the fuel tank pipe and filler pipe **at least 35 mm (1.4 in)**.

Steering angle transfer shaft (4-wheel steering)
Refer to section 10

DECELERATION CONTROL SYSTEM

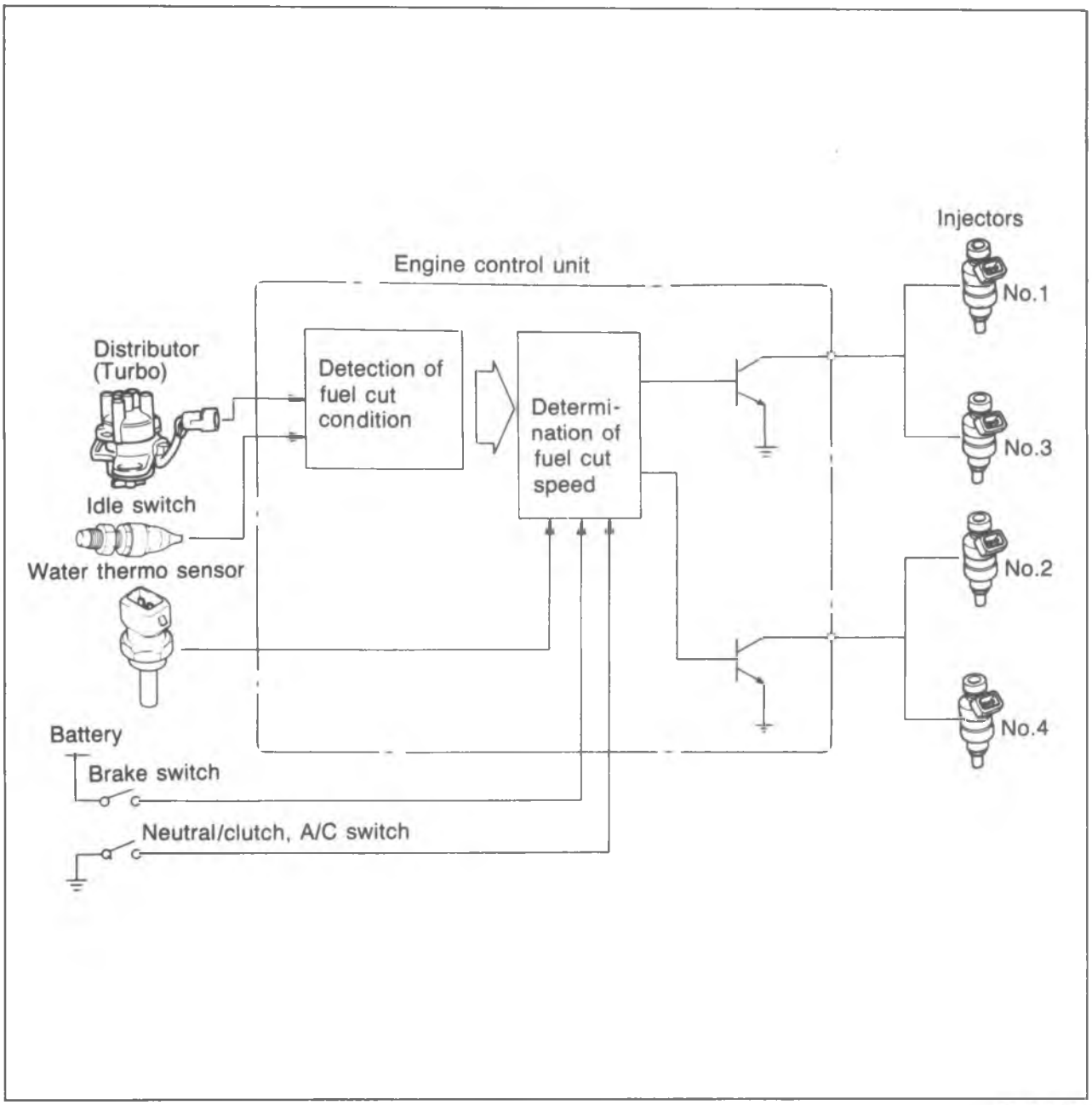

86U04A-121

The fuel cut system is provided as a deceleration control system.
This system is to improve fuel economy.

COMPONENT DESCRIPTIONS

Component	Function	Remarks	Application	
			New model	Previous model
Brake light switch	Detects braking operation (deceleration); sends signal to control unit		○	○
Clutch switch	Detects in-gear condition; sends signal to control unit	Switch ON when clutch pedal released	○	○
EC-AT control unit	Detects N or P range; sends signal to control unit		○	X
Engine control unit	Detects signals from input sensors and switches; cuts fuel injection		○	○
Idle switch	Detects when throttle valve fully closed; sends signal to control unit	Installed on throttle body	○	○
Inhibitor switch	Detects in-gear condition; sends signal to EC-AT control unit	Switch ON in "N" or "P" range	○	○
Ne rotor and pick-up	Detects crank angle at 30° intervals; sends signal to control unit	Engine speed signal	○	X
Neutral switch	Detects in-gear condition; sends signal to control unit	Switch ON when in-gear	○	○
Water thermo sensor	Detects coolant temperature; sends signal to control unit		○	○

86U04B-096

TROUBLESHOOTING

Check the condition of the wiring harness and connectors before checking the sensor or switches below.

Note
Make the system inspection first. If no problem is found, continue with the next system inspection of the Troubleshooting Guide. (Refer to page 4B—8 and 9.)

Possible cause	Water thermo sensor	System inspection
Page	4B—116	4B—84
Checking order	2	1

86U04B-097

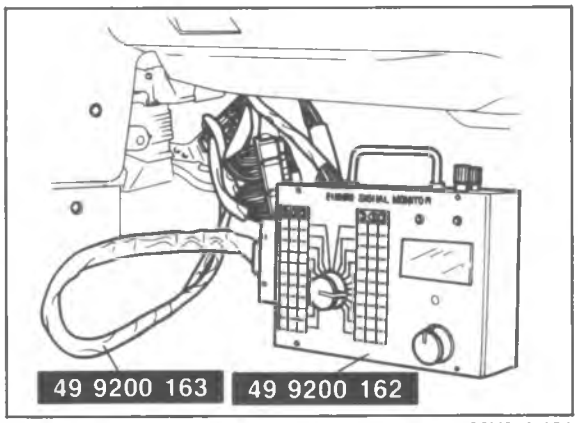

86U04A-124

System Inspection (Electrical Signal)

1. Connect the **SST** between the wiring harness and control unit.
2. Set 3C or 3E position on the **SST**.

Note
3C — For No. 2 and No. 4 injectors
3E — For No. 1 and No. 3 injectors

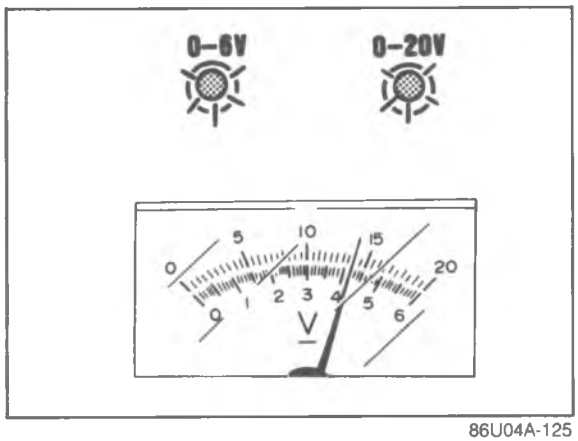

86U04A-125

3. Check that the indicator lamps alternately flash at idle.

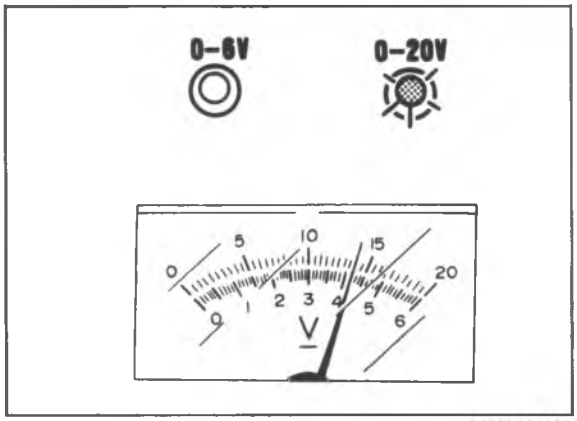

86U04A-126

4. Increase the engine speed to **4,000 rpm**, then suddenly decrease the engine speed.
5. Check that the red indicator lamp stays illuminated during deceleration.

ELECTRONIC SPARK ADVANCE (ESA) CONTROL SYSTEM

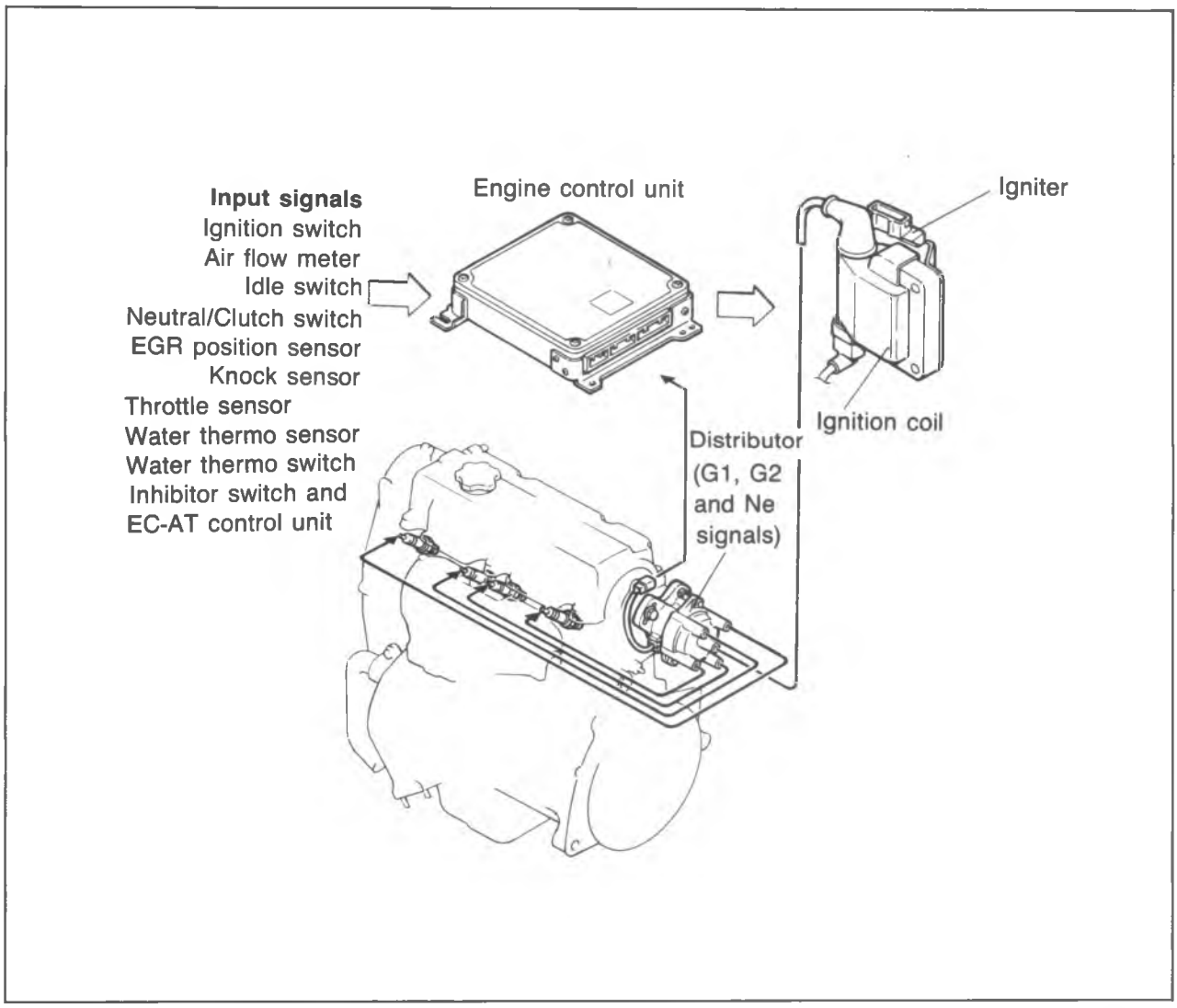

86U04B-098

This system electronically controls the ignition timing to obtain better engine performance.
The best ignition timing is determined and set within the engine control unit based on signals from the various sensors and switches.

COMPONENT DESCRIPTIONS

Component	Function	Remarks	Application	
			New model	Previous model
Air flow meter	Detects amount of intake air; sends signal to control unit	Intake air temp sensor and fuel pump switch are integrated	○	○
Clutch switch	Detects in-gear condition; sends signal to control unit	Switch ON when clutch pedal depressed	○	○
Distributor	Has Ne and G rotor		○	X
EGR position sensor	Detects EGR control valve lift amount; sends signal to control unit	Variable resister	○	○
Engine control unit	Detects signals from input sensors and switches; decides the best ignition timing		○	X
G rotor and pick-up	Detects No.1 and No.4 cylinders TDC; sends signal to control unit	For determining fuel injection timing and ignition timing	○	X
Idle switch	Detects when throttle valve fully closed; sends signal to control unit	Installed on throttle body	○	○
Igniter	Receives spark signal from control unit and generates high voltage to ignition coil		○	X
Ignition switch (ST position)	Sends engine cranking signal to control unit		○	○
Main relay	Supplies electric current to injectors and control unit		○	○
Ne rotor and pick-up	Detects crank angle at 30° intervals; sends signal to control unit	Engine speed signal	○	X
Neutral switch	Detects in-gear condition; sends signal to control unit	Switch ON when in-gear	○	○
Knock control unit	Receives knock signal from knock sensor; sends signal to control unit		○	○
Knock sensor	Detects engine knocking; sends signal to knock control unit		○	○
EC-AT control unit	Detects N or P range; sends signal to control unit		○	X
Inhibitor switch	Detects in-gear condition; sends signal to EC-AT control unit	Switch ON in "N" or "P" range	○	○
Throttle sensor	Detects throttle valve opening angle; sends signal to control unit	Installed on throttle body	○	○
Water thermo sensor	Detects coolant temperature; sends signal to control unit		○	○
Water thermo switch	Detects radiator coolant temperature; sends signal to control unit	ON: above 17°C (63°F)	○	○

86U04B-099

TROUBLESHOOTING

Check the condition of the wiring harness and connectors before checking sensors or switches.

Possible cause / Page / Symtom	Distributor	Igniter	Engine control unit terminal	Knock control system
			1T, 1Q, 1N, 1P, and 1O	
	4B—88	Refer to section 5	4B—105 and 4B—106	4B—88
Hard start or won't start (Cranks OK)	1	2	3	
Knocking				1

86U04B-100

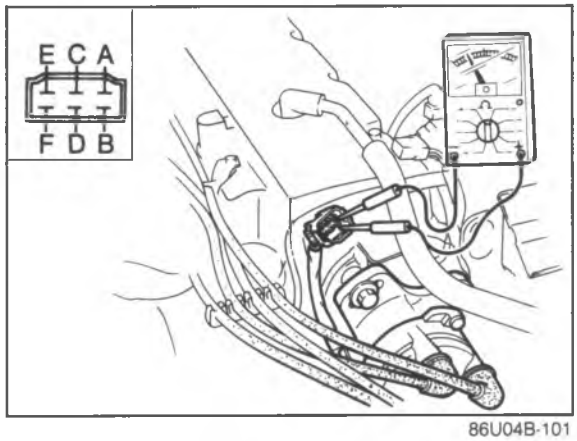

86U04B-101

Distributor

1. Disconnect the distributor connector.
2. Connect an ohmmeter to the terminals of the distributor connector.
3. Check the resistance of the following.

Terminal	Resistance (at 20°C, 68°F)
A—B	210—260 Ω
C—D	
E—F	

4. If not correct, replace the distributor.

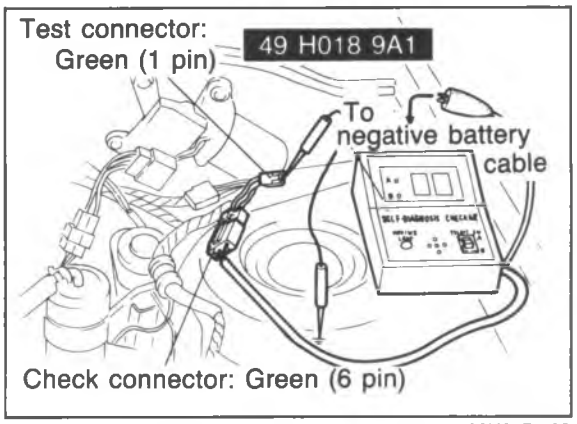

86U04B-102

Knock Control System

1. Connect the **SST** to the check connector.
2. Ground the test connector with a jumper wire.
3. Turn the ignition switch ON.

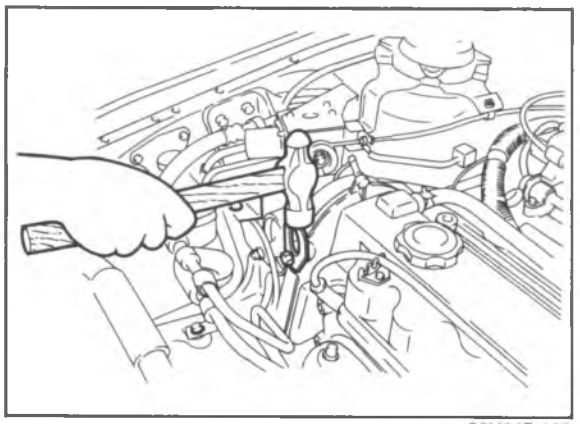

86U04B-103

4. Tap the right engine hanger (drive belt side) and check that the monitor lamp on the **SST** flashes.

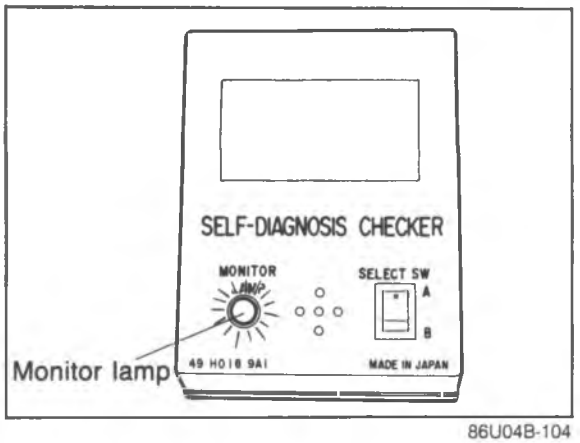

86U04B-104

5. If not correct, connect a good knock sensor to the vehicle wiring harness and ground it.
6. Perform step 4 again and judge the malfunctioning part as follows:

Monitor lamp flashes	Malfunction
YES	Knock sensor
NO	Knock control unit

7. Replace the malfunctioning part.

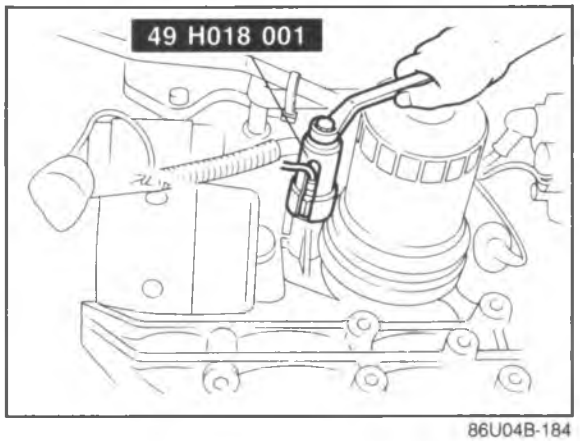

86U04B-184

Knock Sensor
Replacement

1. Disconnect the knock sensor connector.
2. Lift the vehicle and remove the intake manifold bracket.
3. Remove the knock sensor with the **SST**.
4. Install the knock sensor in the reverse order of removal.

EXHAUST GAS RECIRCULATION (EGR) SYSTEM

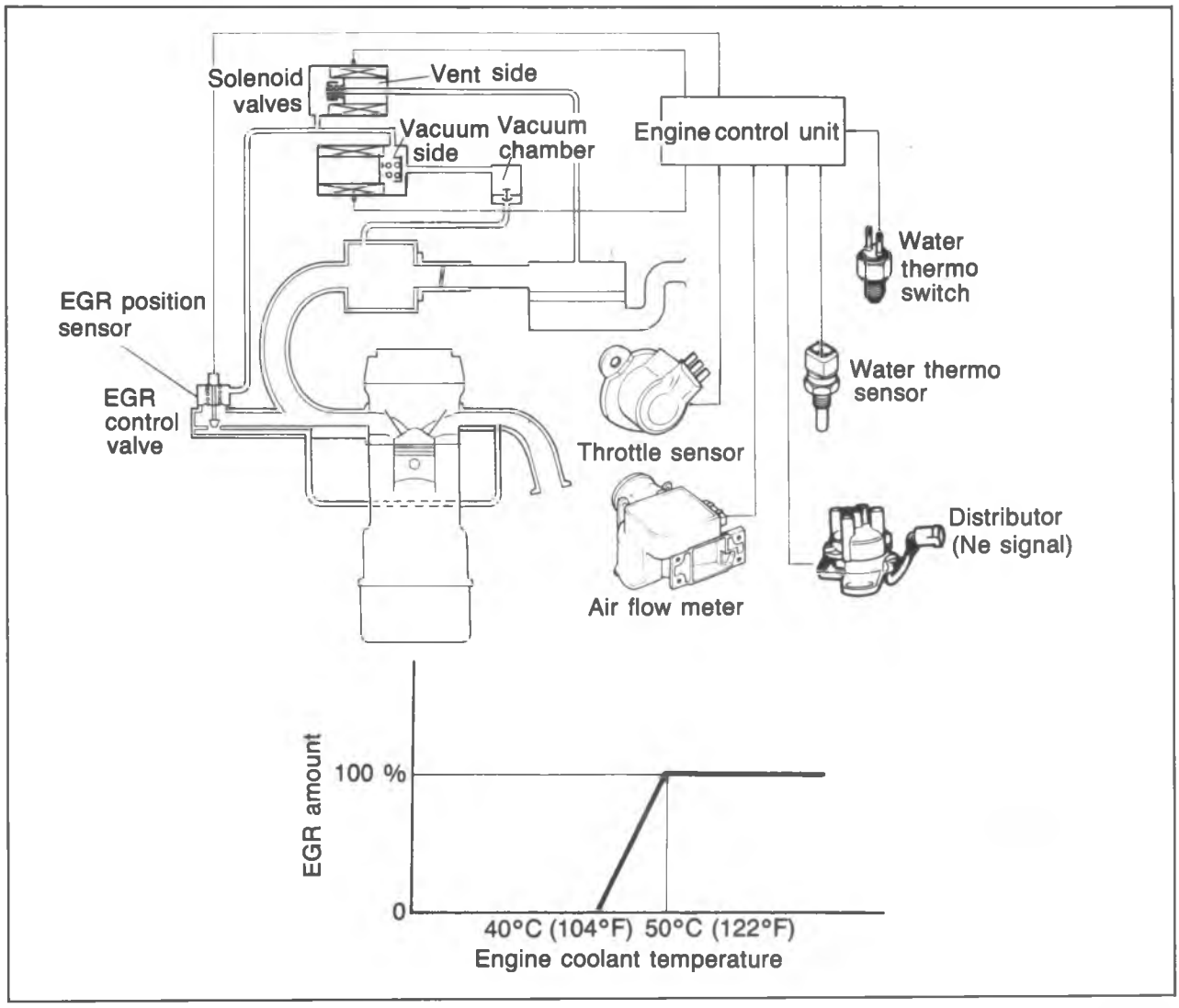

86U04B-105

This system introduces exhaust gas into the intake manifold to reduce NOx in the exhaust gas. It operates depending on the throttle valve opening, driving condition, engine coolant temperature **(above 40°C, 104°F)**, and radiator coolant temperature **(above 17°C, 63°F)**.

COMPONENT DESCRIPTION

Component	Function	Remarks	Application	
			New model	Previous model
Air flow meter	Detects amount of intake air; sends signal to control unit	Intake air temp sensor and fuel pump switch are integrated	○	○
Distributor	Has Ne and G rotors		○	X
EGR control valve	Recirculates portion of exhaust gas		○	○
EGR position sensor	Detects EGR control valve lift amount; sends signal to control unit	Variable resistor	○	○
Engine control unit	Detects signals from input sensors and switches; operates solenoid valves (vent or vacuum side)		○	○
Ne rotor and pick-up	Detects crank angle at 30° intervals; sends signal to control unit	Engine speed signal	○	X
Solenoid valve (EGR)	Controls vacuum to EGR control valve	Vent side: controls vent line Vacuum side: controls vacuum line	○	○
Throttle sensor	Detects throttle valve opening angle; sends signal to control unit	Installed on throttle body	○	○
Vacuum chamber	Stores vacuum led to solenoid valve (EGR, vacuum side) under turbocharger boost condition	Integrated check valve	○	X
Water thermo sensor	Detects coolant temperature; sends signal to control unit		○	○
Water thermo switch	Detects radiator coolant temperature; sends signal to control unit	ON: above 17°C (62.6°F)	○	○

86U04B-106

TROUBLESHOOTING

Check the condition of the wiring harness and connectors before checking sensors or switches.

Note
Make the system inspection first. If no problem is found, continue with the next system inspection of the Troubleshooting Guide. (Refer to pages 4B—8 and 9.)

Possible cause	Water thermo sensor	EGR control valve	EGR position sensor	Solenoid valve		Throttle sensor	Vacuum chamber	Water thermo switch	Engine control unit terminal		System inspection
				Vent	Vac.				1H	2M, 2N	
Page	4B—116	4B—94	4B—93	4B—93		4B—112	4B—95	4B—116	4B—105	4B—106 and 107	4B—93
Checking order	7	3	4	2		8	6	5	9	10	1

86U04B-107

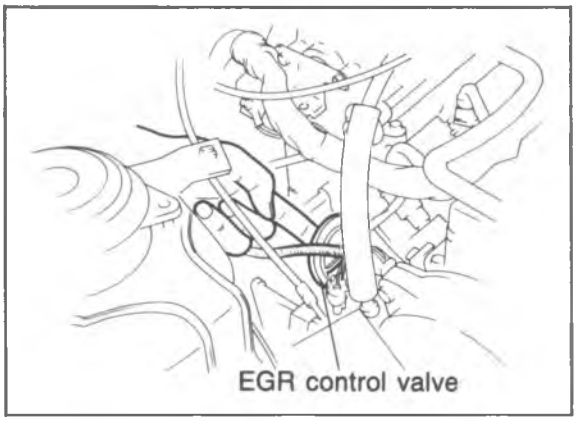

86U04B-108

System Inspection

1. Start the engine
2. Accelerate the engine and verify that the diaphragm of the EGR control valve does not move while the engine is still cold.
3. Warm up the engine to normal operating temperature and run it at idle.

   Warning
   Be careful when checking the EGR control valve because the surrounding area is very hot.

4. Accelerate the engine and check that the diaphragm of the EGR control valve moves upward.

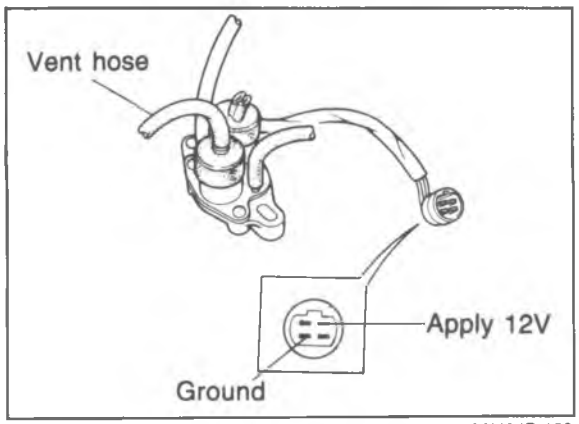

86U04B-109

Solenoid Valve (EGR, Vent Side)

1. Disconnect the vacuum hoses.
2. Blow through the vent hose and make sure air flows.
3. Disconnect the solenoid valve connector.
4. Apply 12V and ground the valve as shown.
5. Blow through the vent hose and make sure air does not flow.
6. If not correct, replace the solenoid valves.

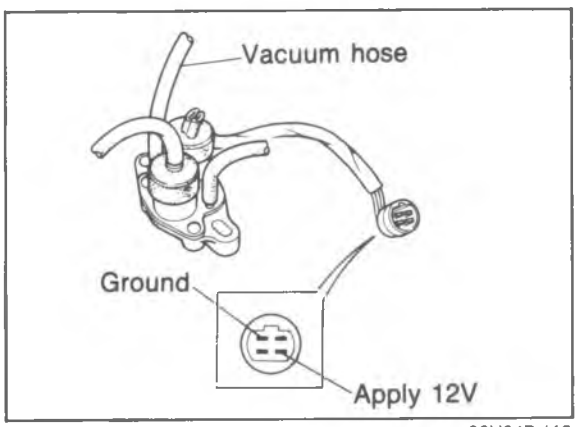

86U04B-110

Solenoid valve (EGR, Vacuum Side)

1. Disconnect the vacuum hoses.
2. Blow through the vacuum hose and make sure air does not flow.
3. Disconnect the solenoid valve connector.
4. Apply 12V and ground the valve as shown.
5. Blow through the vacuum hose and make sure air flows.
6. If not correct, replace the solenoid valves.

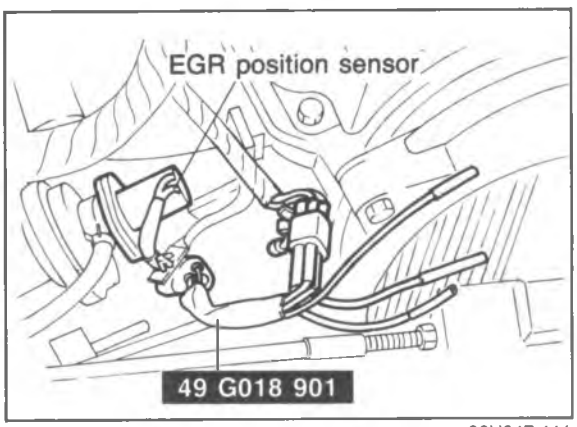

86U04B-111

EGR Position Sensor
Inspection of output voltage

1. Disconnect the EGR position sensor connector.
2. Connect the **SST** between the EGR position sensor and wiring harness.

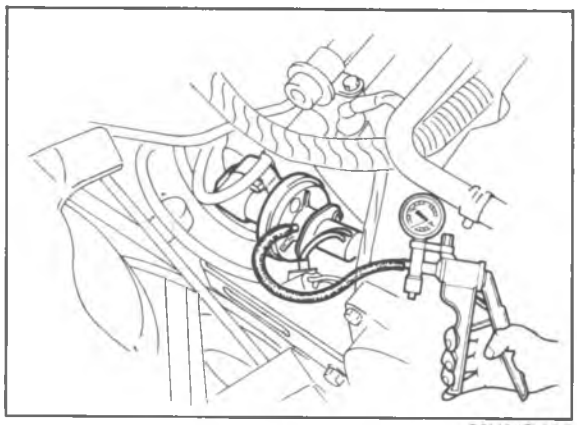

86U04B-112

3. Disconnect the vacuum hose from the EGR control valve and connect the vacuum pump.
4. Turn the ignition switch ON.
5. Check voltage of each terminal in the conditions shown in the table.

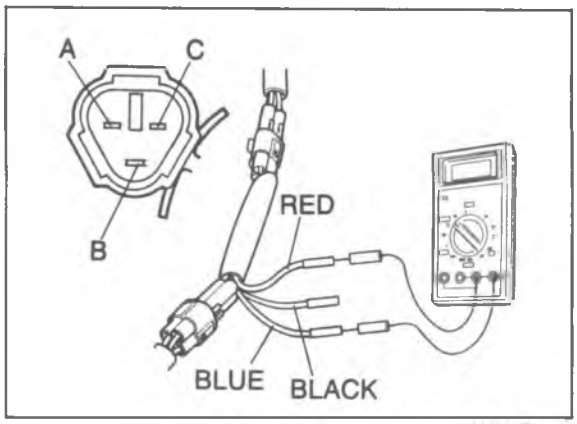

86U04B-113

Terminal	**SST** wire color	Vacuum	
		0	120 mmHg (4.7 inHg)
C	Red	0.25—0.95V	Approx. 4.0V
B	Blue	Below 1.5V	
A	Black	4.5—5.5V	

6. If not correct at A and B terminal, check the wiring harness and 2A and 2C terminals of the engine control unit.
7. If not correct at C terminal, check the sensor resistance, then the wiring harness and the engine control unit 2F terminal.
8. Disconnect the **SST** and reconnect the EGR position sensor connector.

Inspection of resistance

1. Disconnect the EGR position sensor connector.
2. Check as shown resistance between the terminals as shown.

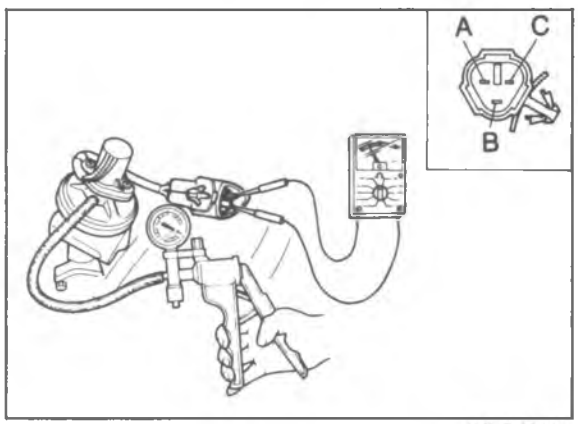

86U04B-114

Terminals	Resistance
A—B	5 kΩ
A—C	0.7—5 kΩ
B—C	0.7—5 kΩ

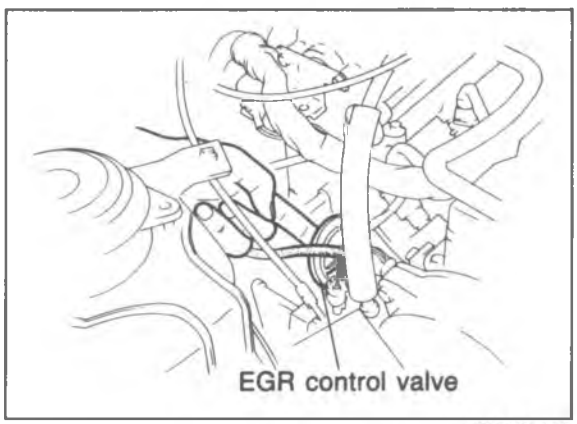

86U04B-115

EGR Control Valve

1. Manually actuate the valve by pushing on the diaphragm with finger.
2. Check that the spring resistance is present and the diaphragm moves freely with no sticking or binding.

Note

Before replacing the EGR control valve, check the intake air and control systems.

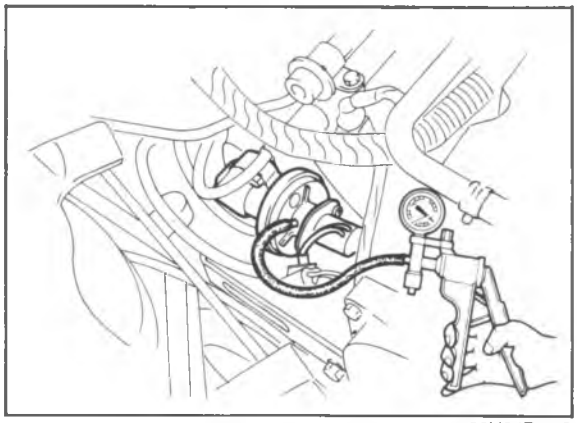

86U04B-116

3. Warm up the engine and run it at idle.
4. Connect a vacuum pump to the valve and apply vacuum.
5. Check that the engine runs roughly or stalls at more than the specified vacuum.

Specification:
40—60 mmHg (1.6—2.4 inHg)

6. If not correct, replace the EGR control valve.

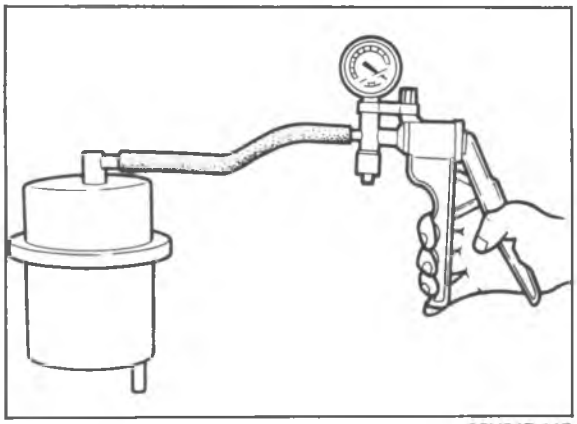

86U04B-117

Vacuum Chamber

1. Disconnect the vacuum hoses from the vacuum chamber, and remove it.
2. Connect the vacuum pump to the vacuum chamber as shown.
3. Apply vacuum and check that no vacuum is held.
4. If not correct, replace the vacuum chamber.

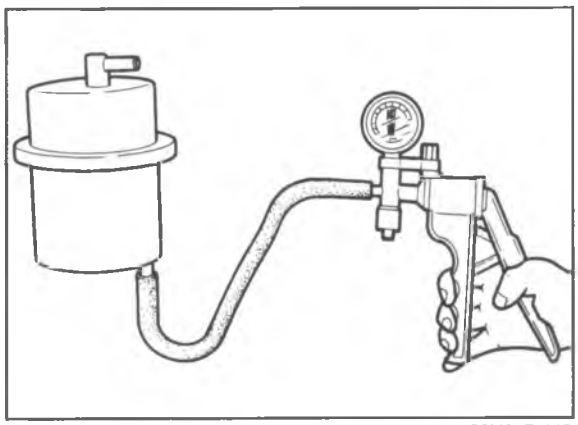

86U04B-118

5. Connect the vacuum pump to the vacuum chamber as shown.
6. Apply vacuum and check that vacuum is held.
7. If not correct, replace the vacuum chamber.

EVAPORATIVE EMISSION CONTROL (EEC) SYSTEM

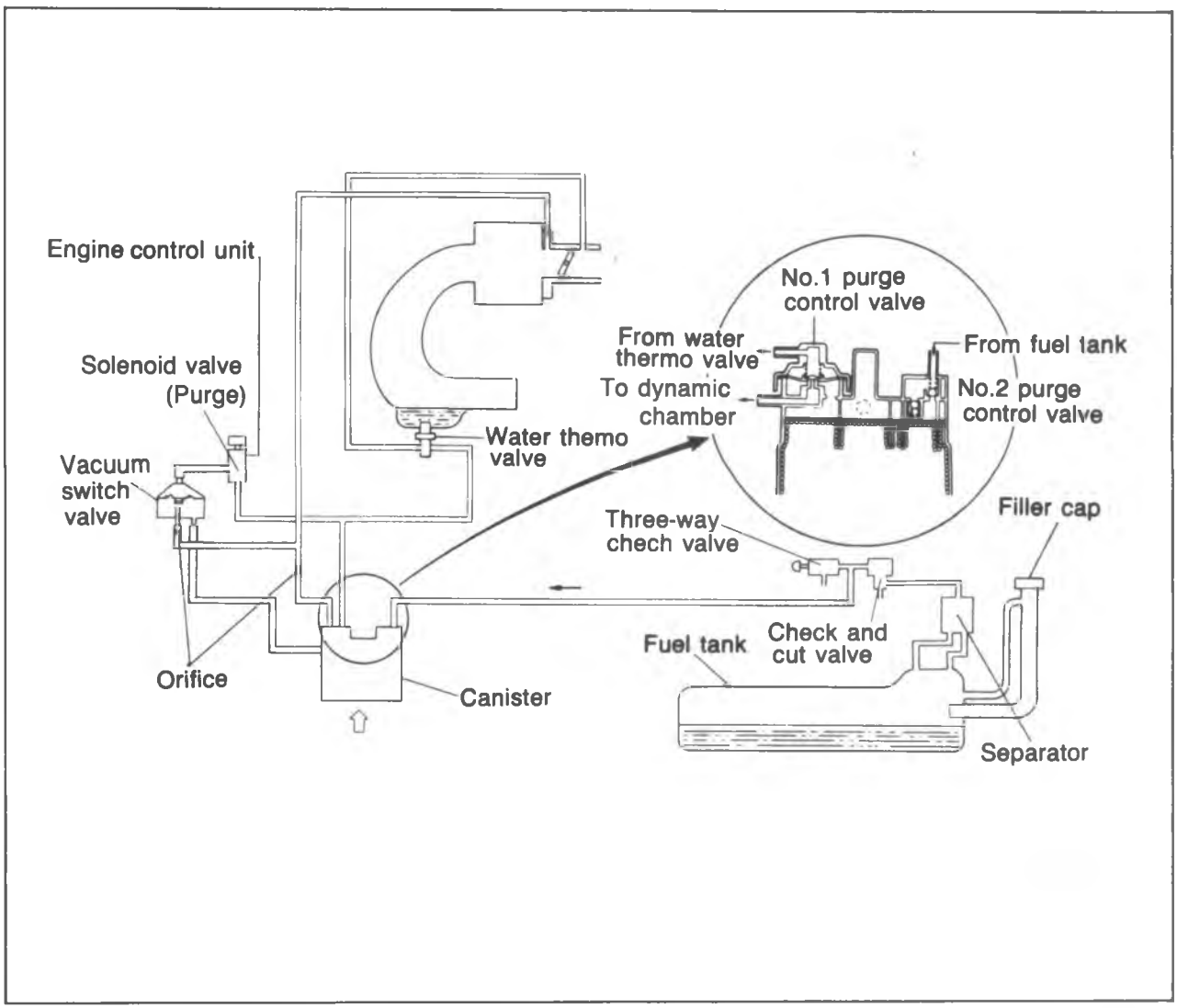

86U04B-119

This system is the same as that of the non-turbo engine.
Refer to page 4A—73 page for servicing the system except the replacement of the three-way check valve and check and cut valve (4-wheel steering).

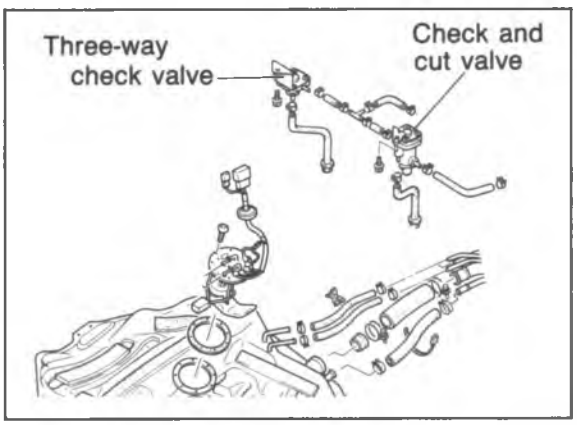

86U04B-120

Replacement

Three-way check valve and check and cut valve

1. Remove the fuel tank. (Refer to page 4B—79.)
2. Disconnect the evaporative hoses from the three-way check valve and check and cut valve.
3. Replace them.
4. Install in the reverse order of removal.

POSITIVE CRANKCASE VENTILATION (PCV) SYSTEM

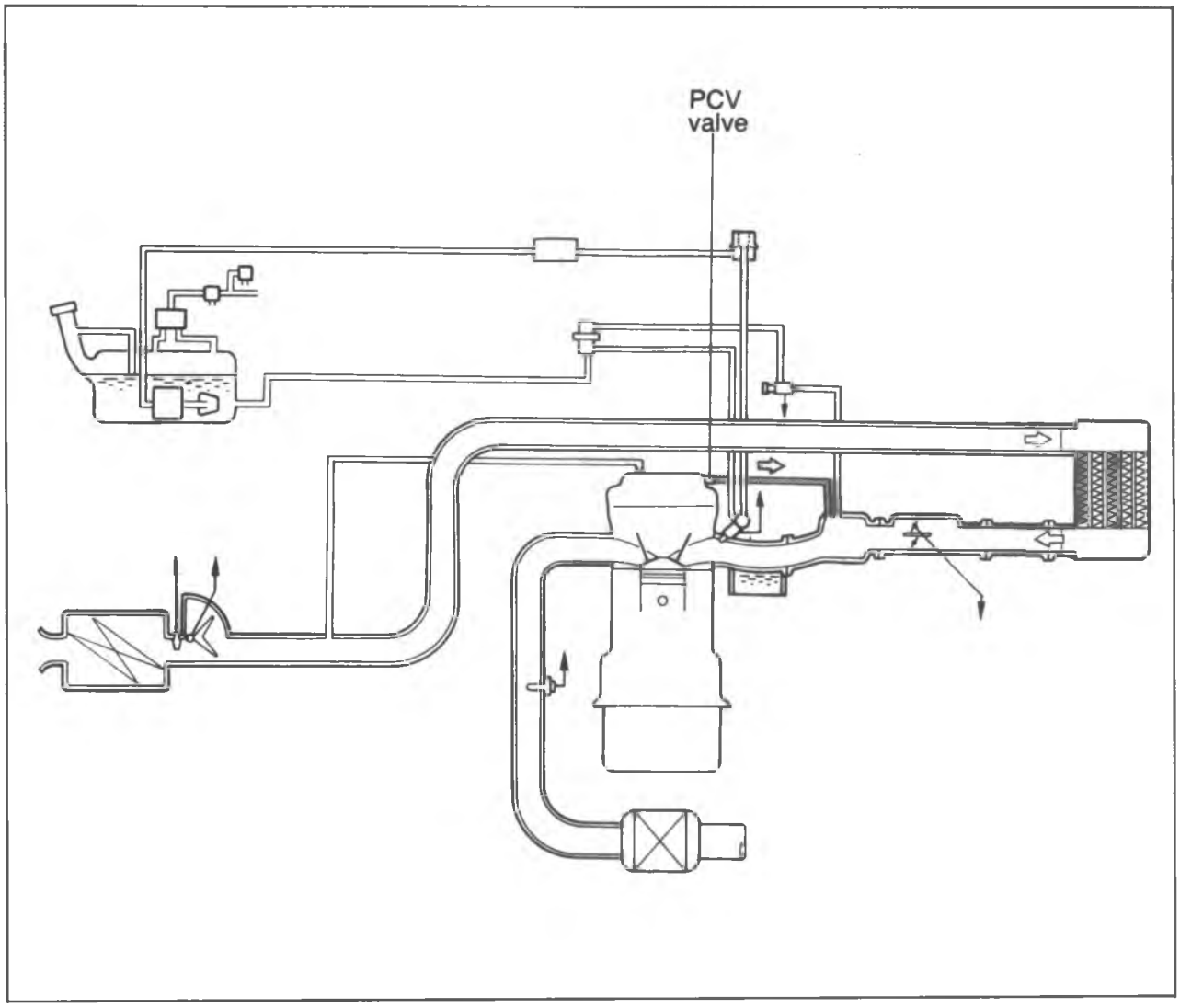

86U04B-121

This system is the same as that of the non-turbo engine.
Refer to page 4A—79 page for servicing the system.

EXHAUST SYSTEM

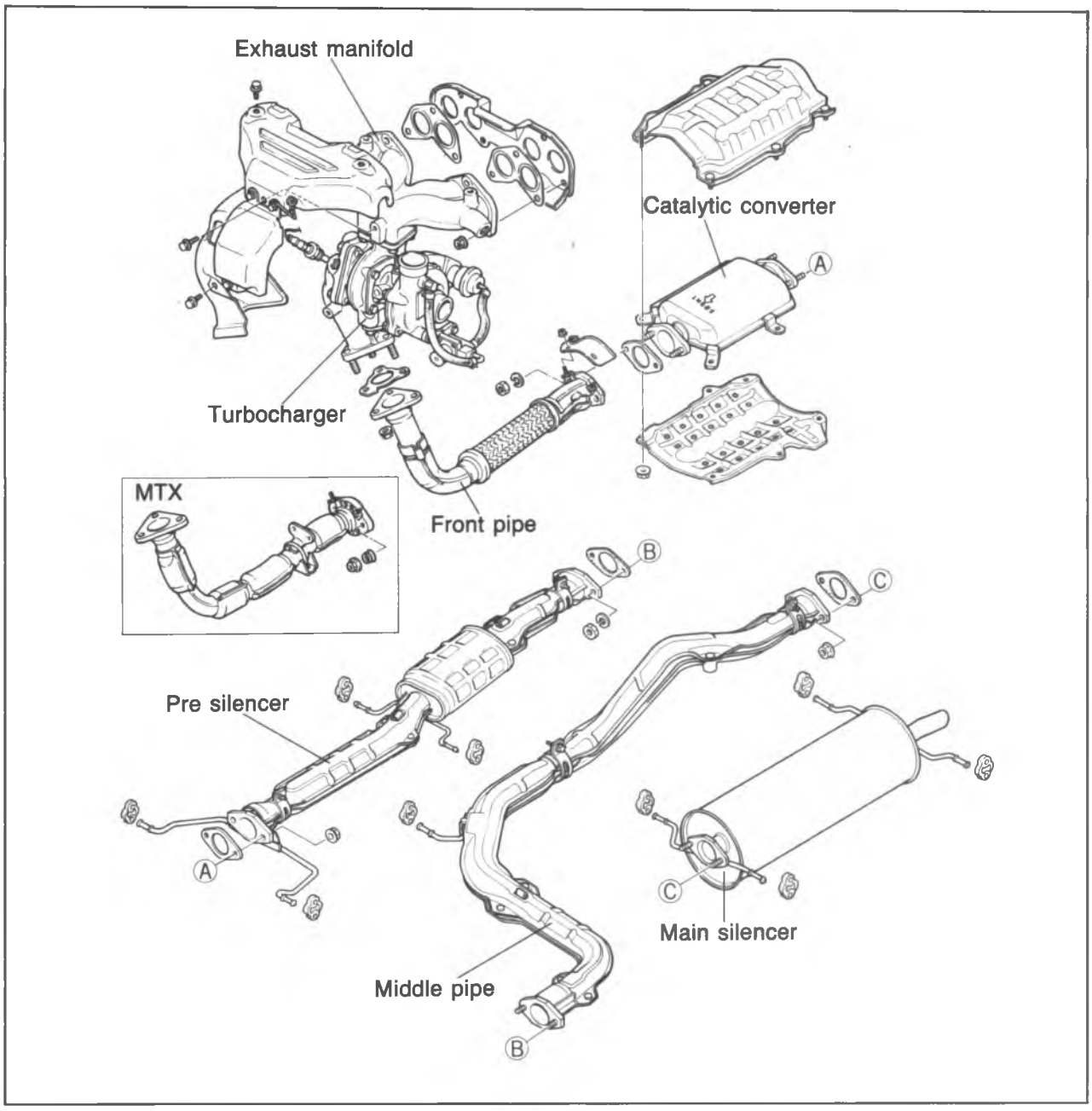

86U04B-122

The catalytic converter is used to reduce CO, HC and NOx. The converter contains a compound of platinum and rhodium. It is a three-way catalyst type with a volume of **2,300 cc (140 cu in)**.
This system is the same as that of the non-turbo engine.
Refer to page 4A—80 section for servicing the system.

CONTROL SYSTEM

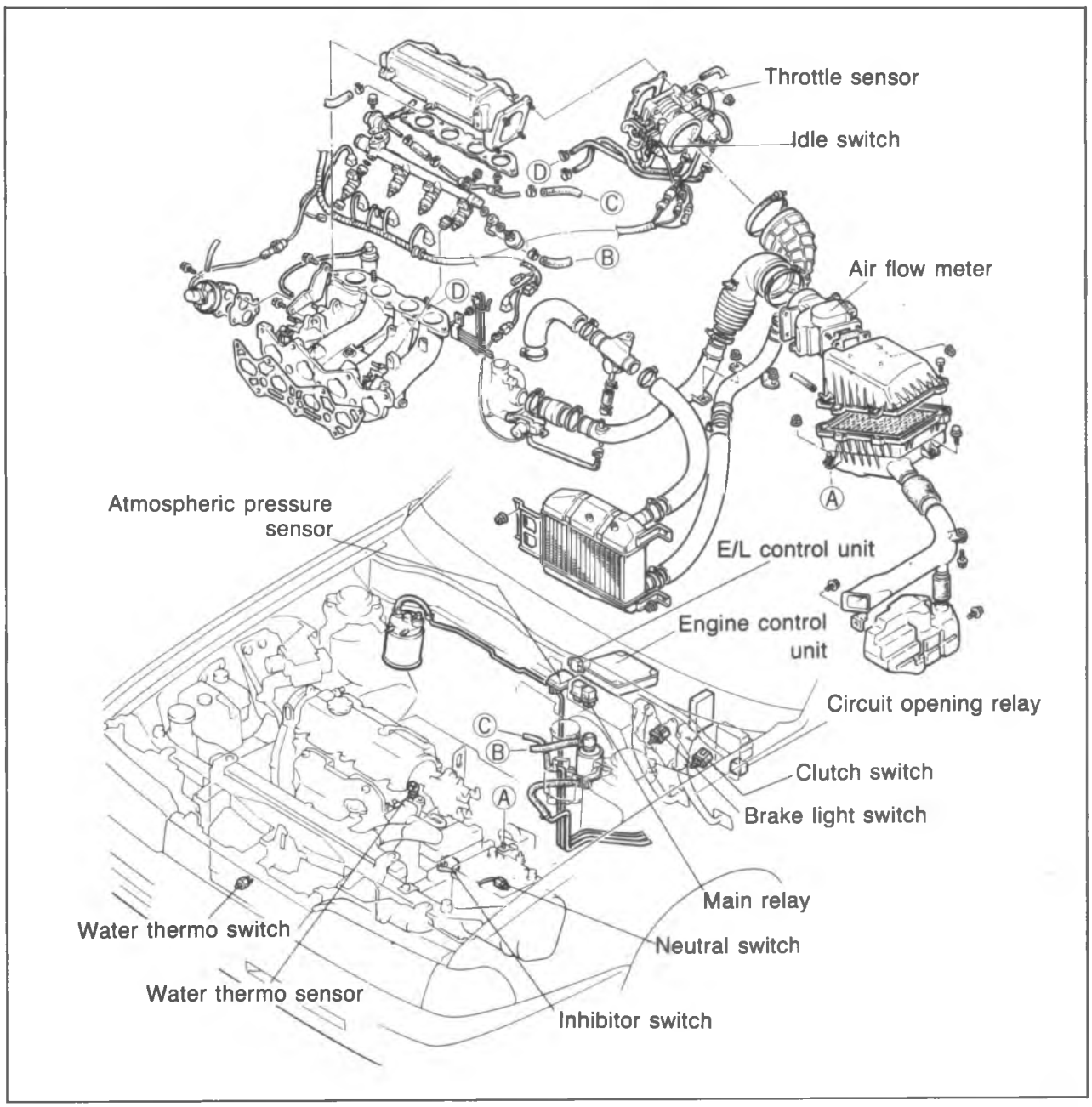

86U04B-123

The control system consists of the input devices and the control unit. The control unit controls the fuel injection amount (EGI), fuel injection pressure, bypass air amount, ignition timing, switch monitor function, and fail-safe function.

RELATIONSHIP CHART
Output Devices and Input Devices

INPUT DEVICES \ OUTPUT DEVICES	INJECTOR: FUEL INJECTION AMOUNT	INJECTOR: FUEL INJECTION TIMING	BAC VALVE: AIR VALVE	BAC VALVE: ISC VALVE	SOLENOID VALVE (EGR Vent side)	SOLENOID VALVE (EGR Vacuum side)	SOLENOID VALVE (PURGE)	SOLENOID VALVE (PRESSURE REGULATOR)	SOLENOID VALVE (WASTEGATE)	IGNITER
TEST CONNECTOR	×	×	×	○	×	×	×	×	×	○
KNOCK SENSOR	×	×	×	×	×	×	×	×	○	○
BRAKE LIGHT SWITCH	○	×	×	×	×	×	×	×	×	×
EGR POSITION SENSOR	×	×	×	×	○	○	×	×	×	○
ELECTRICAL LOAD CONTROL UNIT	×	×	×	○	×	×	×	×	×	×
P/S PRESSURE SWITCH	×	×	×	○	×	×	×	×	×	×
A/C SWITCH	○	×	×	○	×	×	○	×	×	×
IGNITION SWITCH (STA POSITION)	○	○	×	×	×	×	×	○	×	○
INHIBITOR SWITCH and EC—AT CONTROL UNIT	○	×	×	○	×	×	×	×	×	○
NEUTRAL AND CLUTCH SWITCH	○	×	×	○	×	×	×	×	×	○
OXYGEN SENSOR	○	×	×	×	×	×	×	×	×	×
WATER THERMO SWITCH (RADIATOR)	○	×	×	×	○	○	×	×	×	○
ATMOSPHERIC PRESSURE SENSOR	○	×	×	○	×	×	×	×	×	×
INTAKE AIR THERMO SENSOR	○	×	×	○	×	×	×	○	○	×
WATER THERMO SENSOR	○	○	×	○	○	○	○	○	○	○
IDLE SWITCH	○	○	×	○	○	○	×	×	×	○
THROTTLE SENSOR	○	○	×	○	○	○	×	○	×	○
AIR FLOW METER	○	×	×	×	○	○	○	×	○	○
Ne SIGNAL	○	○	×	○	○	○	○	○	○	○
G2 SIGNAL	×	○	×	×	×	×	×	×	×	○
G1 SIGNAL	×	○	×	×	×	×	×	×	×	○

○: Related
X : Not related

86U04A-167

Output Devices and Engine Conditions

OUTPUT DEVICES \ ENGINE CONDITIONS		CRANKING (COLD ENGINE)	WARMING UP (DURING IDLE)	MEDIUM LOAD		ACCEL-ERATION	HEAVY LOAD	DECEL-ERATION	IDLE (THROT-TLE VALVE FULLY CLOSED)	IGN: ON (ENGINE NOT RUNNING)	REMARKS
				COLD	WARM						
INJEC-TOR	INJECTION	Rich			Rich and lean	Rich		Fuel cut	Rich and lean	No injection	
	INJECTION TIMING	1 group (once per revolution)	2 group (once per two revolutions)						2 group (once per two revolutions)		Above 6,300 rpm: fuel cut
BAC VALVE	AIR VALVE	Open*			Close						*Coolant temp: below 50°C (122°F)
	ISC VALVE	Large amount of bypass air	Large amount of bypass air*	Small amount of bypass air						No bypass	*In extremly cold condition
SOLENOID VALVE (EGR Vent side)		OFF (Duty value 0%) (Atmospheric pressure to EGR valve) —EGR cut—		Operate [Duty values (EGR amount) change*]			OFF (Duty value 0%) (Atmospheric pressure to EGR valve) —EGR cut—			Does not operate	*Depends on engine condition
SOLENOID VALVE (EGR Vacuum side)		OFF (No vacuum to EGR valve)					OFF (No vacuum to EGR valve)				
SOLENOID VALVE (PURGE)		OFF (2nd stage not operated)		ON (2nd stage operates)					OFF (2nd stage not operated)	OFF	1st stage: controlled by water thermo valve
SOLENOID VALVE (PRESSURE REGULA-TOR CONTROL)		OFF (Vacuum to pressure regulator)							After starting: ON* (Vacuum cut)	OFF	*During hot start only
SOLENOID VALVE (WASTEGATE)		OFF (Boost pressure not released)		ON (Duty value 100%)		ON (Duty value changes)* (Boost pressure controlled)		OFF (Boost pressure not released)		OFF	*When knocking occurs
IGNITER (Ignition timing)		Fixed at BTDC 6°	Advanced: depends on engine condition			Retarded: depends on intensity of knocking		Advanced: depends on engine speed		—	

86U04A-168

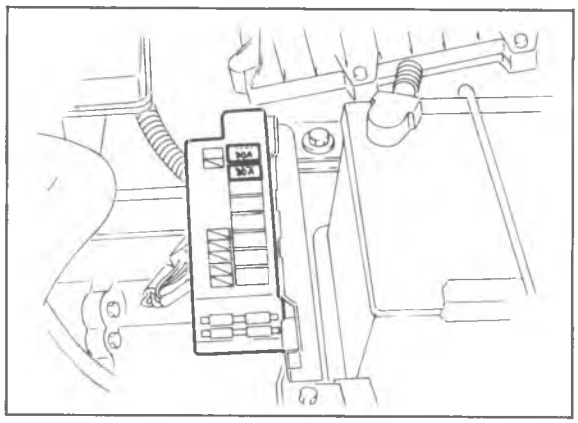

69G04A-161

EGI MAIN FUSE

Inspection

Check the continuity of EGI main fuse.

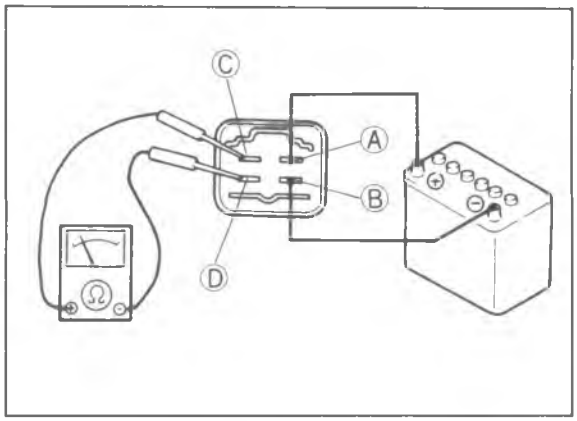

86U04A-169

MAIN RELAY

1. Check that a "clicking" sound is heard at the main relay when turning the ignition switch ON and OFF.
2. Apply 12V and a ground to (A) and (B) terminals of the main relay.
3. Check continuity at terminals using an ohmmeter.

Terminals \ Operation	12V Not applied	12V Applied
Ⓒ — Ⓓ	No continuity	Continuity

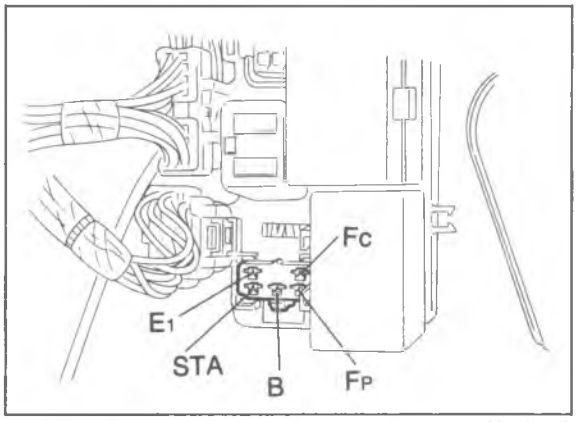

86U04A-170

CIRCUIT OPENING RELAY

Relay Circuit

1. Remove the circuit opening relay.
2. Check the circuit as described.

Terminal	Checking item	Correct result
Fp	Resistance	0.2—30 Ω
Fc	Continuity (cranking)	∞
B	Voltage (Ign: ON)	Battery voltage
STA	Voltage (Cranking)	Approx. 9V
E_1	Continuity	∞

Circuit Opening Relay

Apply 12V and a ground to the terminals below and check the circuit opening relay as described.

12V	Grounded	Correct result
STA	E_1	B ↔ FP: Continuity
B	Fc	Fp: Battery voltage

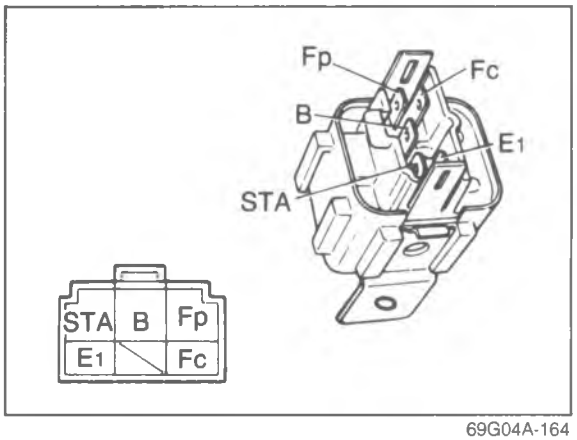

69G04A-164

Resistance

Check the resistance between the terminals using an ohmmeter.

Between terminals	Resistance (Ω)
STA ↔ E1	15 ~ 30
B ↔ Fc	80 ~ 150
B ↔ Fp	∞

ENGINE CONTROL UNIT
Engine Signal Monitor (49 9200 162) and Adapter (49 9200 163).

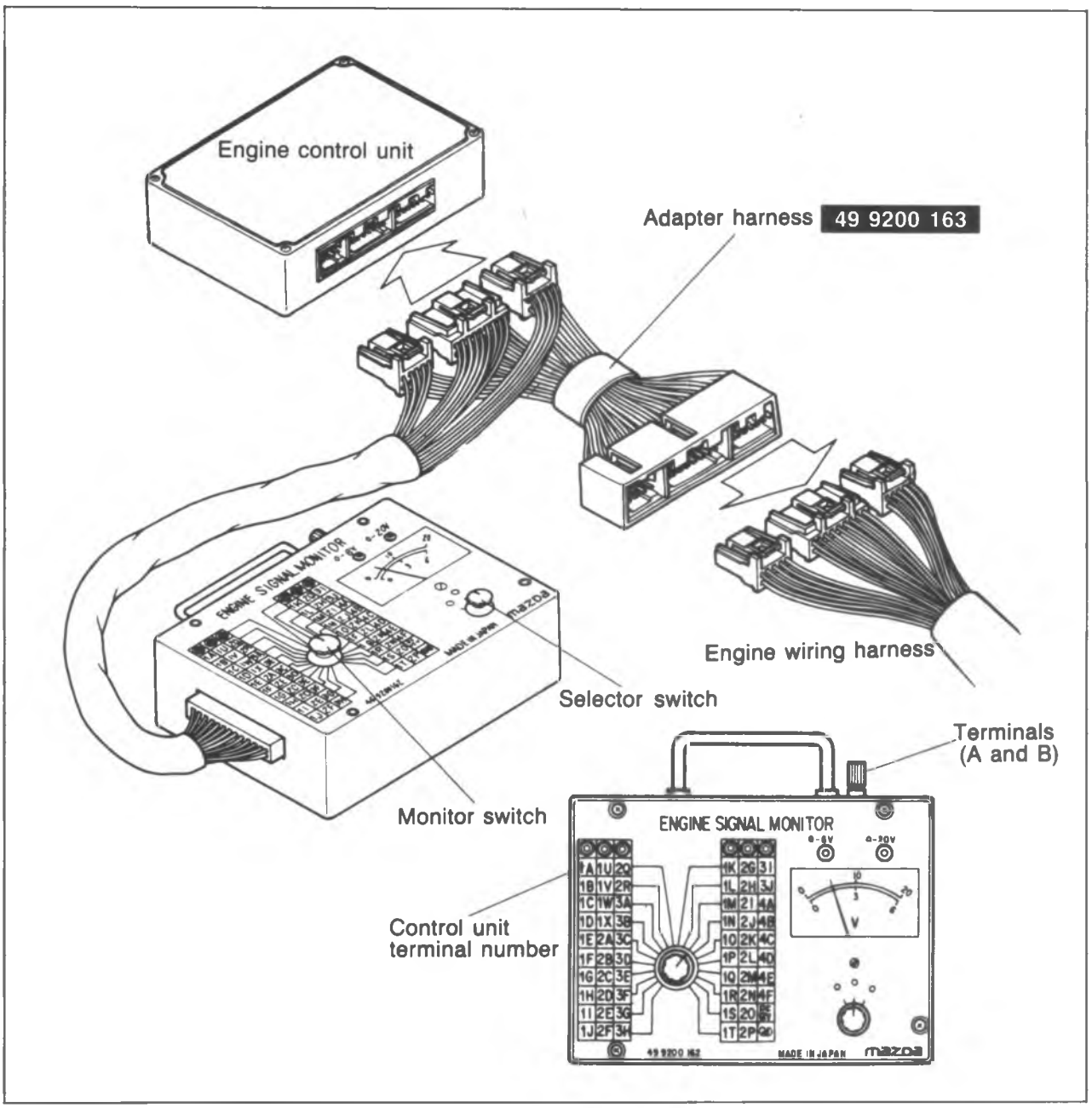

86U04A-171

The **Engine Signal Monitor** (49 9200 162) was developed to check the control unit terminal voltages. This monitor easily inspects the individual terminal voltages through selection of the monitor switch.

How to Use the Engine Signal Monitor

1. Connect the **Engine Signal Monitor** (49 9200 162) between the engine control unit and the engine harness using the **adapter** (49 9200 163).
2. Turn the selector switch and monitor switch to select the terminal number.
3. Check the terminal voltage.

Caution
Never apply voltage to terminals A and B.

Wiring Diagram

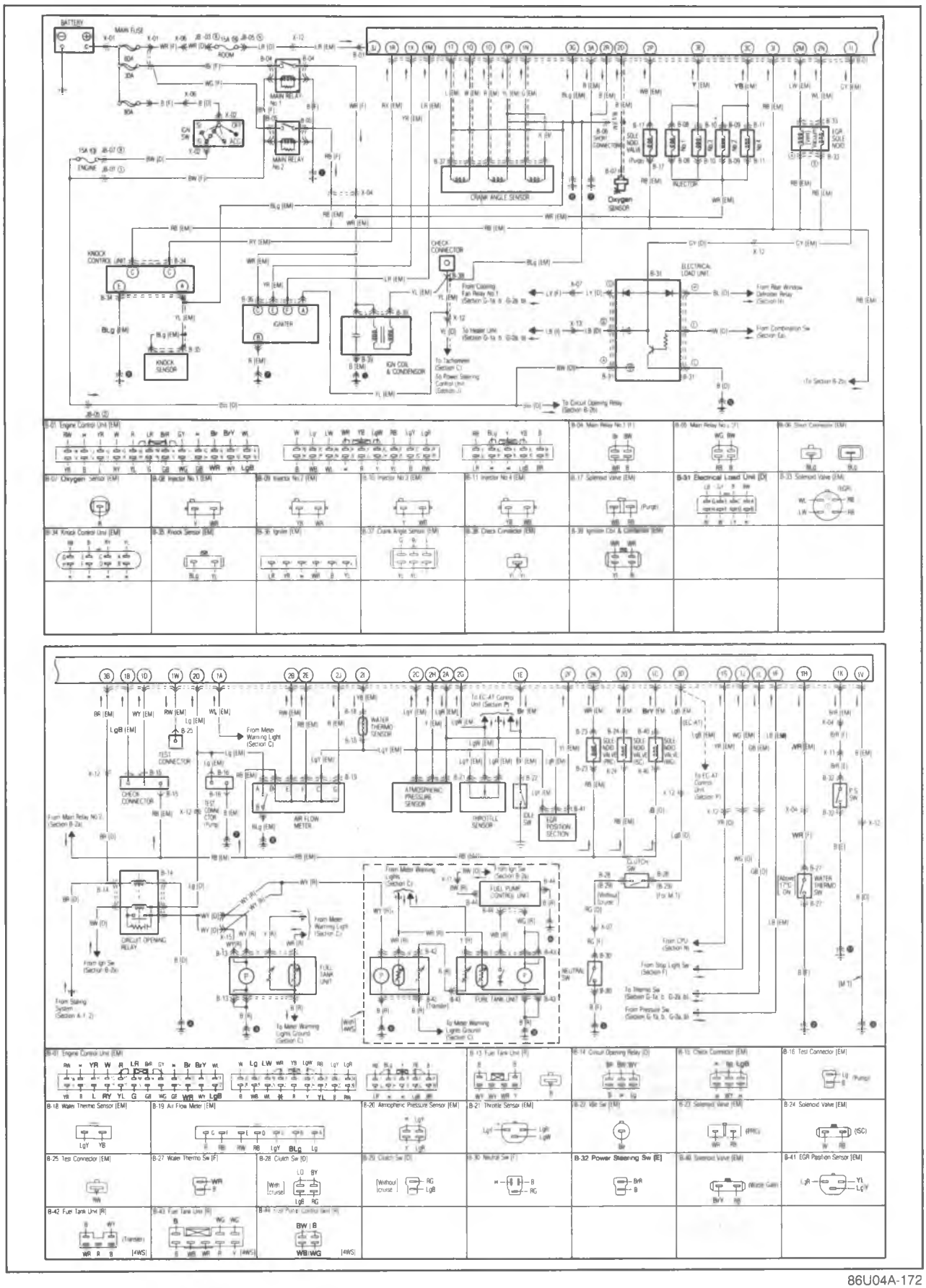

86U04A-172

Terminal Voltage

If the input and output devices and related wiring are normal, but the engine control unit terminal voltage is incorrect, replace the engine control unit.

Terminal	Input	Output	Connection to	Voltage (After warming-up)		Remarks
				IGN: ON	Idle	
1A		○	Malfunction indicator light	For 3 sec. after ignition switch OFF → ON: below 4.8V (Light illuminates) After 3 sec.: Battery voltage (Light does not illuminate)		• Test connector grounded • Light illuminates: below 4.8V • Light does not illuminate: Battery voltage
1B		○	Self-Diagnosis Checker (Code number)	For 3 sec. after ignition switch OFF → ON: below 6.2V (Buzzer sounds) After 3 sec.: Battery voltage (Buzzer does not sound)		• Using Self-Diagnosis Checker and test connector grounded • Buzzer sounds: below 6.2V • Buzzer does not sound: Battery voltage
1C		○	Solenoid valve (Waste gate)	Battery voltage		• Suddenly increase engine speed to above 4,500 rpm: below 3.5V
1D		○	Self-Diagnosis Checker (Monitor lamp)	Test connector grounded For 3 sec. after ignition switch OFF → ON: below 6.2V (Light illuminates) After 3 sec.: Battery voltage (light does not illuminate)	(Test connector grounded) approx. 5V (Test connector not grounded) Monitor lamp ON: below 6.2V Monitor lamp OFF: Battery voltage	With Self-Diagnosis Checker
1E	○		Idle switch	Accelerator pedal released: below 0.5V Accelerator pedal depressed: above 7.7V		
1F		○	A/C relay	Battry voltage	A/C switch ON: below 2.5V A/C switch OFF: battery voltage	Blower motor: ON
1G	—	—	—	—		—
1H	○		Water thermo switch	Above 7.3V		Radiator temp.: below 17°C (63°F)
				Below 1.5V		Radiator temp.: above 17°C (63°F)
1I	○		Electrical load control unit	Electrical load ON: below 1.5V Electrical load OFF: above 7.3V		Electrical load: Rear defroster Headlight Blower motor (3rd & 4th position) Electrical fan
1J	○		Brake light switch	Brake pedal released: below 3.6V Brake pedal depressed: above 10.0V		
1K	○		P/S pressure switch	Constant above 10.5V	P/S ON: below 1.5V P/S OFF: above 10.5V	
1L	○		A/C switch	A/C switch ON: below 1.5V A/C switch OFF: above 10.0V		Blower motor: ON
1M	○		Igniter (IGf signal)	Below 1.0V	0.1—1.8V	
1N	○		Distributor (G1 ⊕ signal)	Approx. 0.6—0.8V		

Terminal	Input	Output	Connection to	Voltage (After warming-up)		Remarks
				IGN: ON	Idle	
1O	○		Distributor (G2 ⊕ signal)	Approx. 0.6—0.8V		
1P	○		Distributor (G1, G2 ⊖ signal)	Approx. 0.6—0.8V		
1Q	○		Distributor (Ne ⊖ signal)	Approx. 0.6—0.8V		
1R	○		Knock control unit	3.3—5.0V		Knocking: 1.3—2.6V
1S		○	Warning buzzer Overboost	TypeA*1: Approx. 0.08V Type B*2: Approx. 12V		Buzzer sounds: Type A: 0V Type B: Blow 1V
1T	○		Distributor (Ne ⊕ signal)	Approx. 0.6—0.8V		
1U	—	—	—	—		—
1V	○		—	Constant below 1.5V		MTX
				Constant above 10.5V		ATX
1W	○		Test connector	Test connector grounded: below 0.5V Test connector not grounded: above 10.5V		Green connector, 1-pin
1X		○	Igniter (IGt signal)	Approx. 0V	Approx. 0.6—0.8V	
2A		○	V ref	4.5—5.5V		
2B	○		Air flow meter (Vc)	7—9V		
2C	—	—	Ground (E2)	0V		
2D	○		Oxygen sensor	0V	0—1.0V	• Cold engine: 0V at idle • After warming-up: Increase engine speed: 0.5—1.0V Deceleration: 0—0.4V
2E	○		Air flow meter (Vs)	Approx. 1.7V	Approx. 4—6V	Increase engine speed: voltage increases
2F	○		EGR position sensor	0.25—0.95V		
2G	○		Throttle sensor	Accelerator pedal released: Approx. 0.5V (depends on 2A terminal voltage)		Max. voltage (Throttle valve fully opened): approx. 4.3V
2H	○		Atmospheric pressure sensor	At sea level: approx. 4.0V		
2I	○		Water thermo sensor	0.3—0.6V		Engine coolant temp. 20°C (68°F): approx. 2.5V
2J	○		Air flow meter (Intake air thermo sensor)	Approx. 2.5V at 20°C (68°F)		
2K		○	Solenoid valve (Pressure regulator control)	For 120 sec. after ignition switch OFF → ON: below 3.5V	For 120 sec. after starting: below 3.5V	Hot condition: Coolant temp. above 70°C (158°F) and Intake air temp. above 20°C (68°F)
				Battery voltage		Other conditions
2L	—	—	—	—		—

*1 Type A: Manufacturer for CPU of body electrical system is "NEC".
*2 Type B: Manufacturer for CPU of body electrical system is "YAZAKI or U-shin"

Terminal	Input	Output	Connection to	Voltage (After warming-up)		Remarks
				IGN: ON	Idle	
2M		○	Solenoid valve (EGR-Vent side)	Battery voltage		• Voltages change depending on driving condition (EGR amount) • Cold engine: battery voltage Radiator coolant temp-below 17°C (63°F) or Engine coolant temp-below 40°C (104°F)
2N		○	Solenoid valve (EGR-vacuum side)	Battery voltage		
2O		○	Circuit opening relay	Battery voltage	Below 3.5V	
2P		○	Solenoid valve (Purge control valve)	Battery voltage		Medium and high load: below 3.5V
2Q		○	Solenoid valve (Idle speed control valve)	Approx. 1.7—11V		
2R	—	—	Ground (E_{02})	0V		
3A	—	—	Ground (E_{01})	0V		
3B	○		Ignition switch (Start position)	Below 2.5V		While cranking: battery voltage
3C		○	Injector (No. 4 and No. 2)	Battery voltage	*1 Battery voltage	*1 Engine Signal Monitor green and red lights flash
3D	○		Inhibitor switch through EC-AT unit	"N" or "P" range: below 2.5V Other ranges: Battery voltage		ATX
			Neutral and clutch switch	In-gear condition Clutch pedal depressed: Battery voltage Clutch pedal released: below 0.5V		MTX (Neutral: constant Battery voltage)
3E		○	Injector (No. 1 and No. 3)	Battery voltage	*1 Battery voltage	*1 Engine Signal Monitor: green and red lights flash
3F	—	—	—	—		—
3G	—	—	Ground (E_1)	0V		
3H	—	—	—	—		—
3I	○	—	Main relay	Battery voltage		
3J	—	—	Battery	Battery voltage		For back-up

86U04B-154

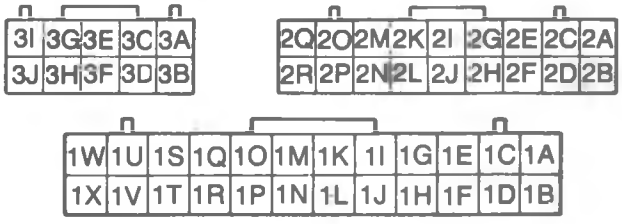

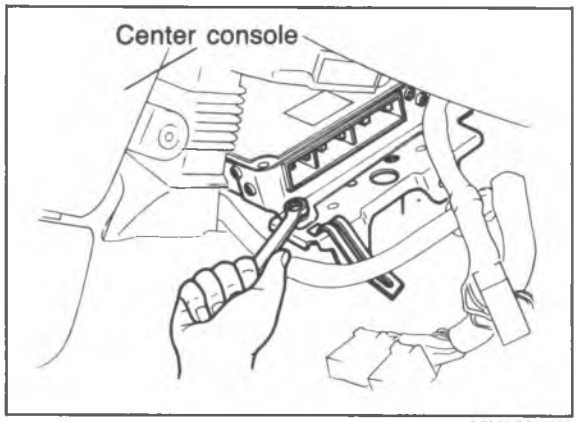

86U04A-174

Replacement

1. Disconnect the negative battery cable.
2. Remove the front console covers (right and left).
3. Disconnect the connectors from the control unit.
4. Replace the control unit.

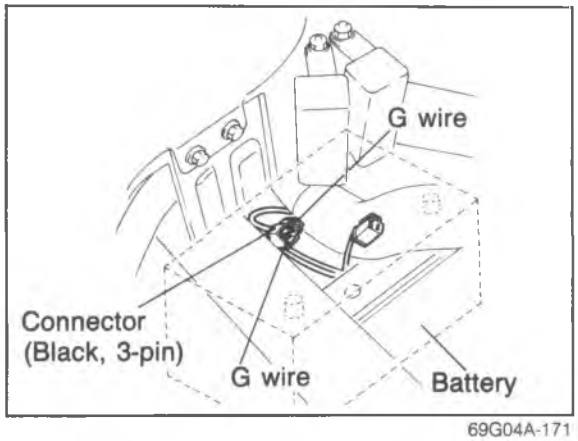

69G04A-171

NEUTRAL SWITCH

Inspection

1. Disconnect the neutral switch connector.
2. Connect an ohmmeter to the switch.
3. Check continuity of the switch.

Transmission	Continuity
In neutral	No
In other ranges	Yes

4. After checking, connect the switch connector.

Note
Refer to section 7A for replacement of the neutral switch.

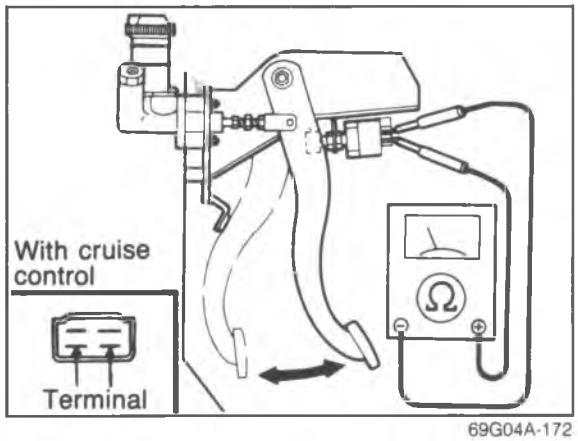

69G04A-172

CLUTCH SWITCH

Inspection

1. Disconnect the clutch switch connector.
2. Connect an ohmmeter to the switch.
3. Check continuity of the switch.

Pedal	Continuity
Depressed	No
Released	Yes

4. After checking, connect the switch connector.

Note
Refer to section 6 for replacement of the clutch switch.

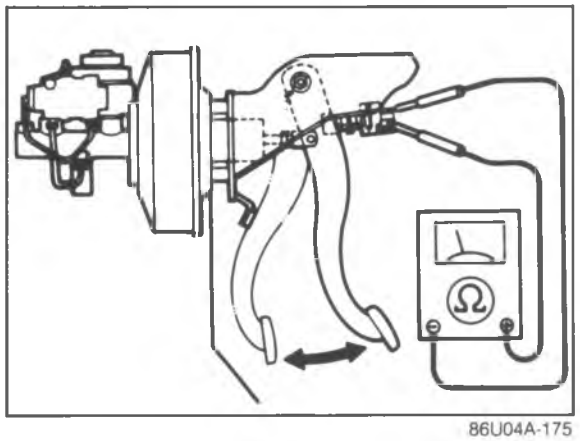

86U04A-175

BRAKE LIGHT SWITCH

Inspection

1. Disconnect the brake light switch connector.
2. Connect an ohmmeter to the switch.
3. Check the continuity of the switch.

Pedal	Continuity
Depressed	Yes
Released	No

4. After checking, connect the switch connector.

Note
Refer to section 11 for replacement of the brake switch.

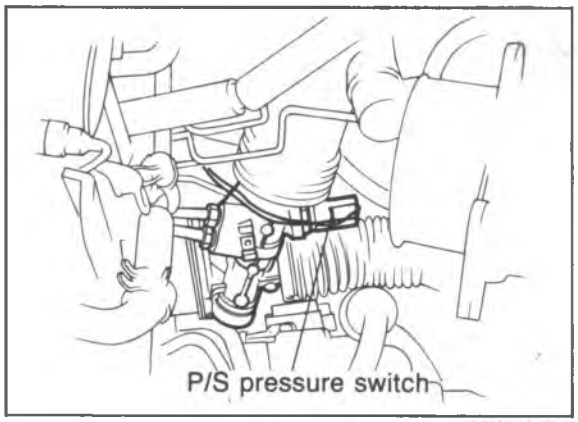

86U04A-176

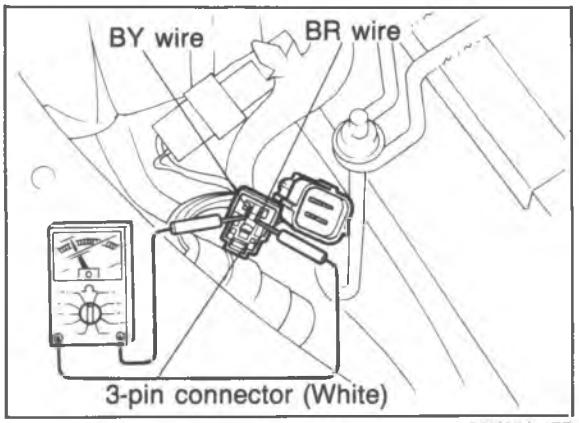

86U04A-177

P/S PRESSURE SWITCH

Inspection

1. Disconnect the P/S pressure switch connector.
2. Connect an ohmmeter to the switch.
3. Start the engine. Check continuity of the switch while turning the steering wheel at idle.

P/S	Continuity
Turning	Yes
Not turning	No

4. Connect the switch connector after checking.

Note
Refer to section 10 for replacement of the P/S pressure switch.

INHIBITOR SWITCH

Inspection

1. Disconnect the inhibitor switch connector.
2. Connect an ohmmeter to the switch.
3. Check continuity of the switch.

Position	Continuity
P and N ranges	Yes
Other ranges	No

4. Connect the switch connector after checking.

Note
Refer to Section 7B for replacement of the inhibitor switch.

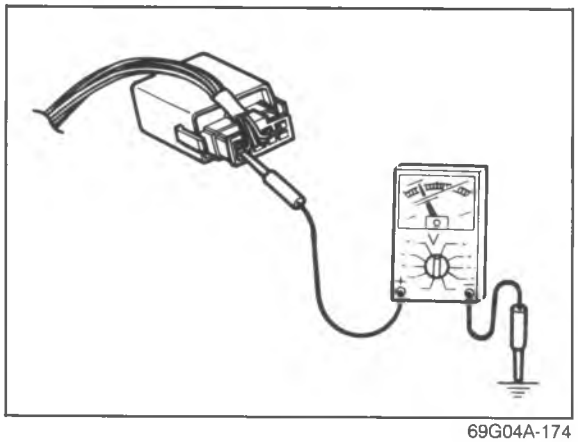

69G04A-174

E/L CONTROL UNIT

Inspection

1. Connect a voltmeter between the E/L control unit and ground.
2. Start the engine and check the terminal voltages as described below.

Terminal	Input	Output	Connection to	Voltage (after warm-up)		Remarks
				Ignition switch: ON	Idle	
A (BW)	—	—	Ignition switch	Battery voltage		
B	—	—	—	—	—	—
C (B)	—	—	Ground	0V		
D (LY)	○		Electrical fan relay	Battary voltage		Coolant temp.: below 97°C (207°F)
				Below 1.5V		Coolant temp.: above 97°C (207°F)
E (GY)		○	Control unit (1I)	0V		E/L: ON
				Battery voltage		E/L: OFF
F (W)	○		Headlight switch	Battery voltage		Headlight switch: ON
				Below 1.5V		Headlight switch: OFF
G (LB)	○		Blower motor switch	Below 1.5V		Blower motor switch: ON (3rd or 4th position)
				Approx. 5V		Others
H (BL)	○		Rear defroster switch	Below 1.5V		Rear defroster switch: ON
				Battery voltage		Rear defroster switch: OFF

86U04A-179

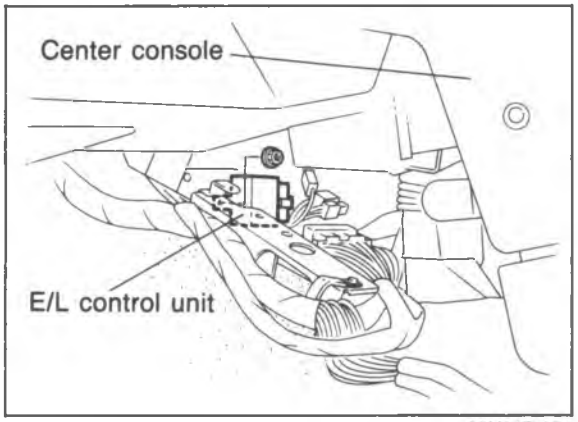

86U04B-124

Replacement

1. Remove the engine control unit. (Refer to page 4B—108)
2. Replace the E/L control unit.
3. Install in the reverse order of removal.

AIR FLOW METER

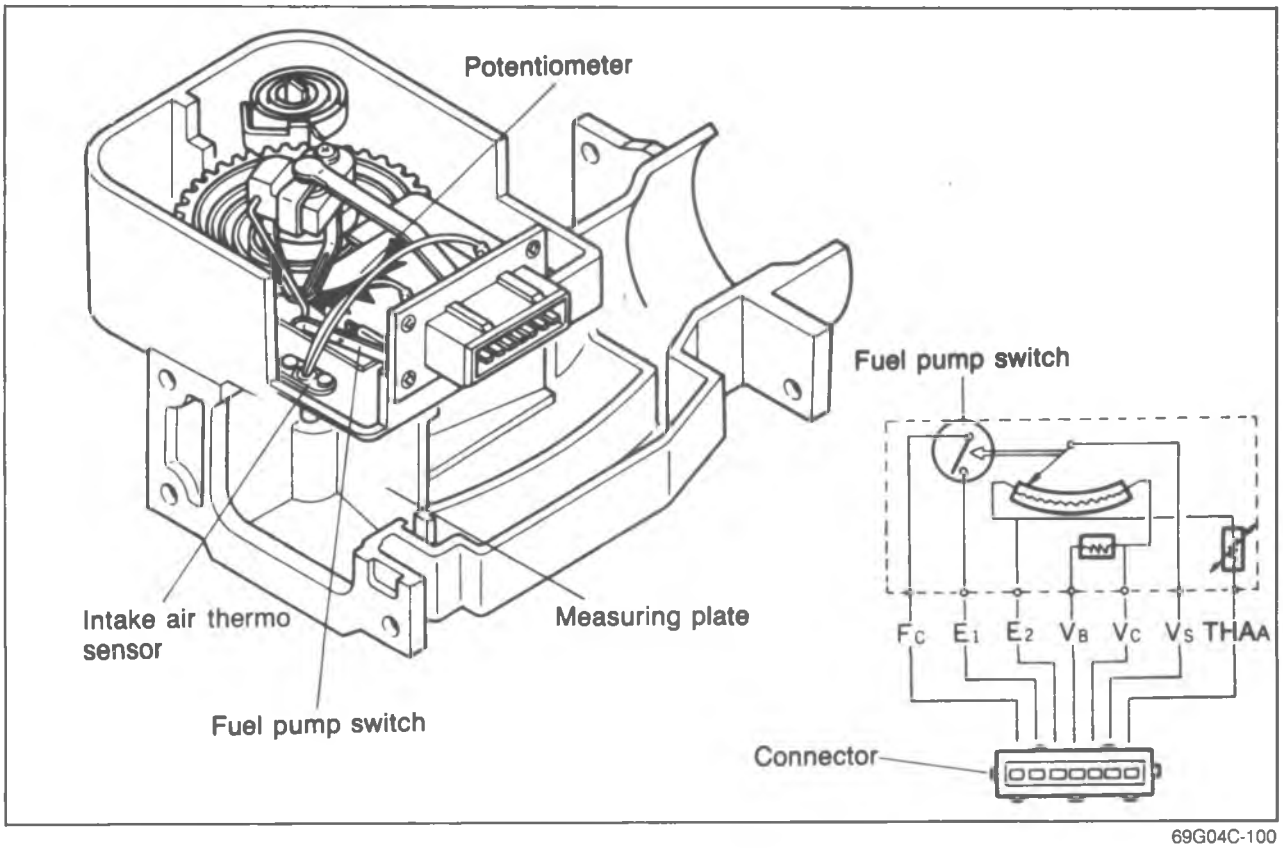

69G04C-100

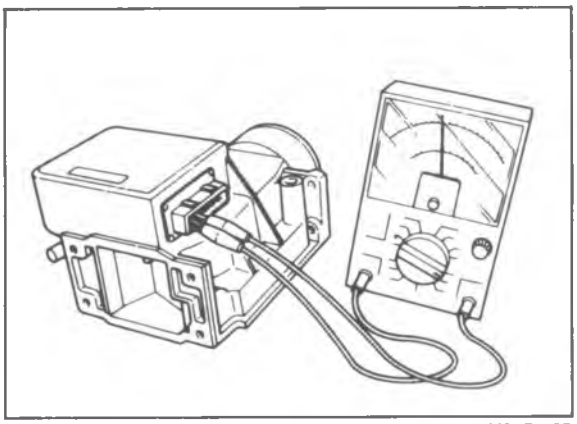

86U04B-125

Inspection

1. Remove the air flow meter. (Refer to page 4B—39)
2. Check the air flow meter body for cracks.
3. Verify that the measuring plate moves smoothly.
4. Disconnect the connector from the air flow meter.
5. Using an ohmmeter, check resistance between the terminals with the measuring plate fully closed and fully open.
6. Connect the connector to the air flow meter after inspecting.

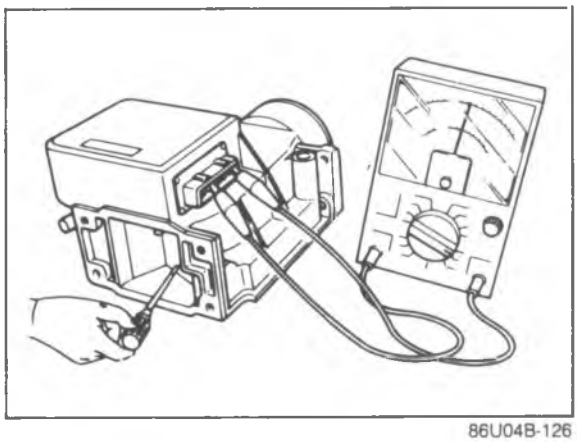

86U04B-126

Terminal	Resistance (Ω)	
	Fully closed	Fully open
$E_2 \leftrightarrow V_S$	20—400	20—1,000
$E_2 \leftrightarrow V_C$	100—400	
$E_2 \leftrightarrow V_B$	200—400	
$E_2 \leftrightarrow THA$ (Intake air thermo sensor)	−20°C (−4°F) 20°C (68°F) 60°C (140°F)	13.6—18.4 kΩ 2.21—2.69 kΩ 493—667 Ω
$E_1 \leftrightarrow F_C$	∞	0

Note

Refer to page 4B—39 for replacement of the air flow meter.

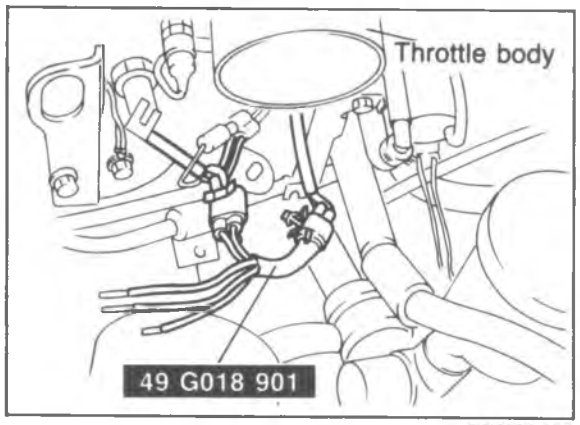

86U04A-183

THROTTLE SENSOR

Caution
Use a precision voltmeter with a scale of 0.01V to inspect or adjust the throttle sensor.

Inspection

1. Remove the air hose from the throttle body.
2. Disconnect the throttle sensor connector (3-pin).
3. Connect the **SST** between the throttle sensor and the wiring harness.
4. Turn the ignition switch ON.
5. Make sure that the throttle valve is fully closed.

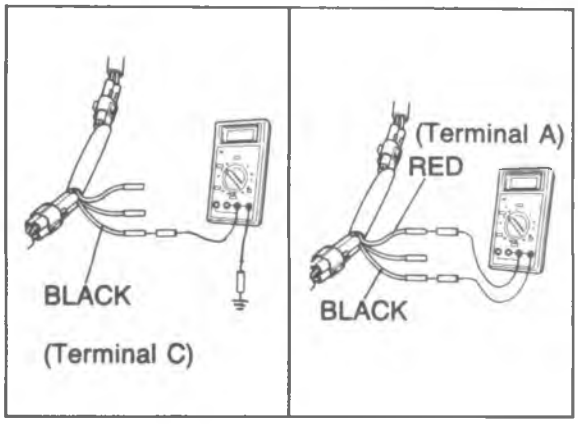

86U04A-184

6. Measure **BLACK** and **RED** wire voltages. Check that the voltages are as specified.

Specification:
BLACK wire — Approx. 0V
RED wire — 4.5—5.5V

7. If not correct, check the battery voltage and wiring harness. If these are OK, replace the engine control unit.
8. Record the **RED** wire voltage.

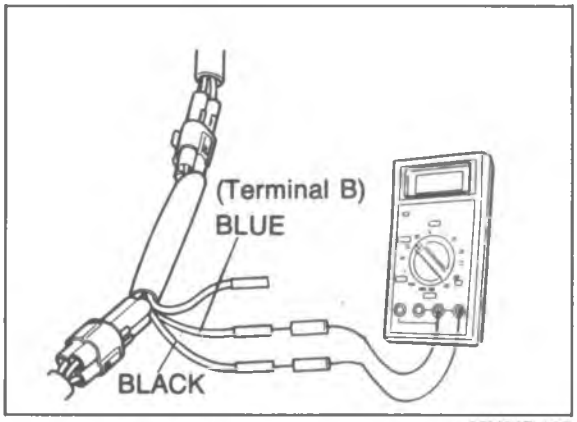

86U04B-127

9. Check that **BLUE** wire voltage for the recorded **RED** wire voltage is as specified below.

Specification:

RED wire voltage (V)	BLUE wire voltage (V)	RED wire voltage (V)	BLUE wire voltage (V)
4.50—4.59	0.37—0.54	5.10—5.19	0.42—0.61
4.60—4.69	0.38—0.55	5.20—5.29	0.43—0.62
4.70—4.79	0.39—0.56	5.30—5.39	0.44—0.63
4.80—4.89	0.40—0.57	5.40—5.49	0.44—0.64
4.90—4.99	0.40—0.58	5.50	0.44—0.66
5.00—5.09	0.41—0.60		

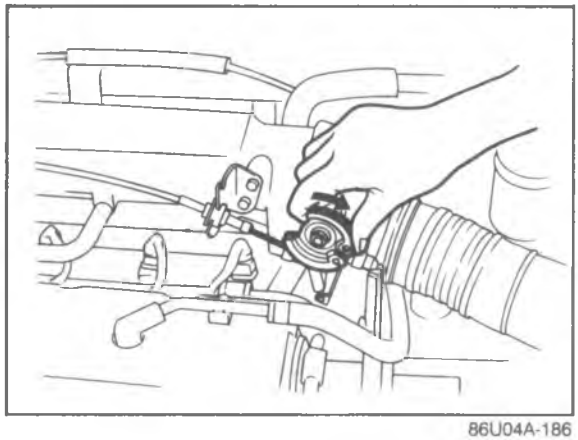

86U04A-186

10. Hold the throttle valve fully open.
11. Check that **BLUE** wire voltage for the recorded **RED** wire voltage is as specified.

Specification:

RED wire voltage (V)	BLUE wire voltage (V)	RED wire voltage (V)	BLUE wire voltage (V)
4.50—4.59	3.58—4.23	5.10—5.19	4.05—4.79
4.60—4.69	3.66—4.32	5.20—5.29	4.13—4.88
4.70—4.79	3.74—4.41	5.30—5.39	4.21—4.98
4.80—4.89	3.82—4.51	5.40—5.49	4.29—5.07
4.90—4.99	3.90—4.60	5.50	4.29—5.17
5.00—5.09	3.97—4.70		

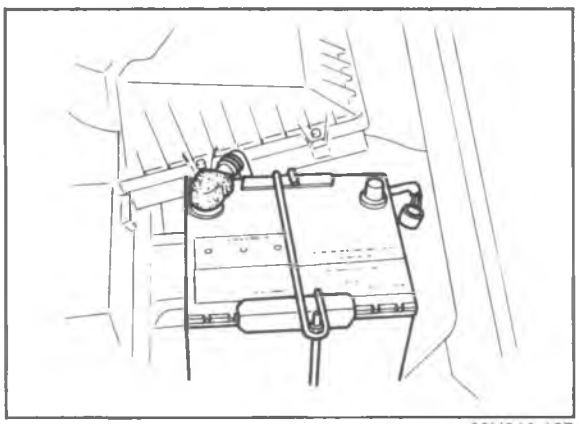

86U04A-187

12. If not correct, replace the throttle sensor.
13. Turn the ignition OFF.
14. Disconnect the **SST** and reconnect the throttle sensor connector.
15. Disconnect the negative battery terminal and depress the brake pedal for at least 5 seconds to eliminate the control unit malfunction memory.

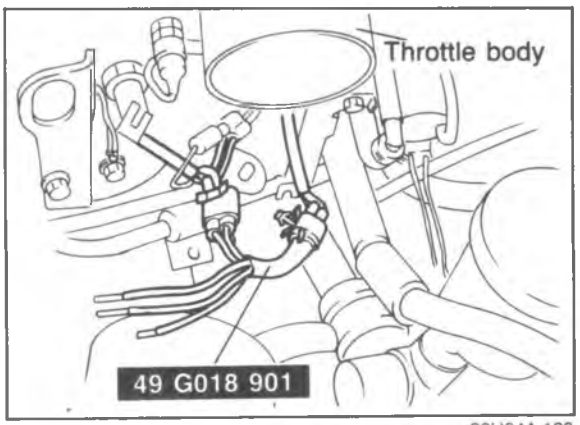

86U04A-188

Adjustment

1. Remove the air hose from the throttle body.
2. Disconnect the throttle sensor connector (3-pin).
3. Connect the **SST** between the throttle sensor and the wiring harness.
4. Turn the ignition switch ON.
5. Make sure the throttle valve is fully closed.

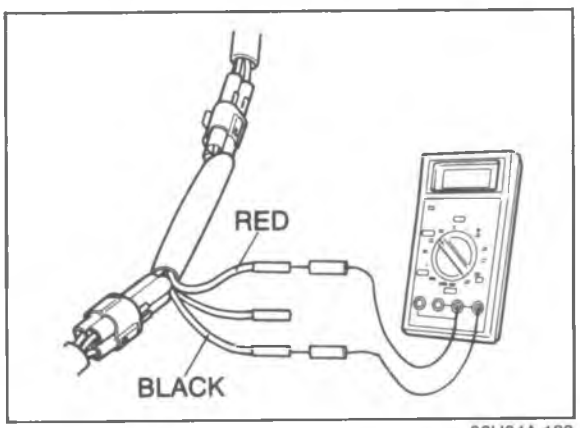

86U04A-189

6. Measure **RED** wire voltage and record it.

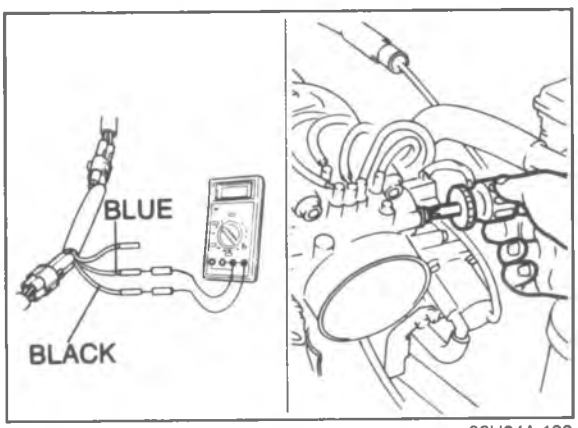

86U04A-190

7. Change the voltmeter connection to the **BLUE** wire.
8. Loosen the throttle sensor mounting screws.

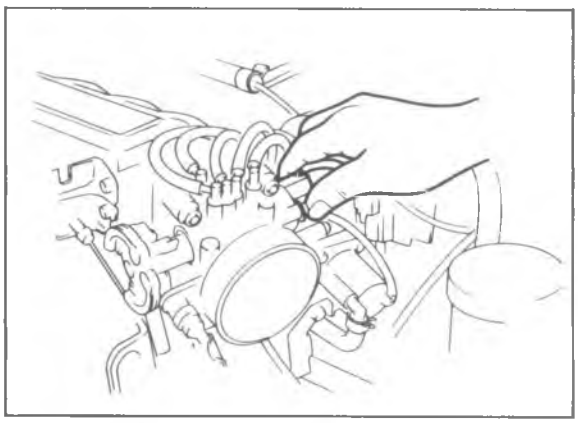

86U04B-128

9. Turn the throttle sensor to adjust **BLUE** wire voltage within the range specified for the recorded **RED** wire voltage.

Specification:

RED wire voltage (V)	BLUE wire voltage (V)	RED wire voltage (V)	BLUE wire voltage (V)
4.50—4.59	0.37—0.54	5.10—5.19	0.42—0.61
4.60—4.69	0.38—0.55	5.20—5.29	0.43—0.62
4.70—4.79	0.39—0.56	5.30—5.39	0.44—0.63
4.80—4.89	0.40—0.57	5.40—5.49	0.44—0.64
4.90—4.99	0.40—0.58	5.50	0.44—0.66
5.00—5.09	0.41—0.60		

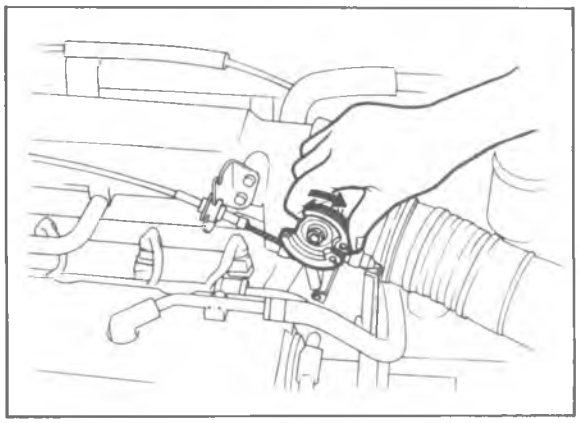

86U04A-192

10. Tighten the throttle sensor mounting screws.
11. Recheck that **BLUE** wire voltage is within specification.
12. Hold the throttle valve fully open.

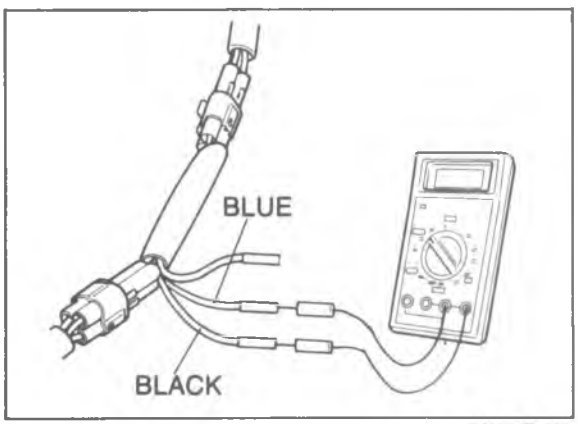

86U04B-129

13. Check that **BLUE** wire voltage is within specification.

Specification:

RED wire voltage (V)	BLUE wire voltage (V)	RED wire voltage (V)	BLUE wire voltage (V)
4.50—4.59	3.58—4.23	5.10—5.19	4.05—4.79
4.60—4.69	3.66—4.32	5.20—5.29	4.13—4.88
4.70—4.79	3.74—4.41	5.30—5.39	4.21—4.98
4.80—4.89	3.82—4.51	5.40—5.49	4.29—5.07
4.90—4.99	3.90—4.60	5.50	4.29—5.17
5.00—5.09	3.97—4.70		

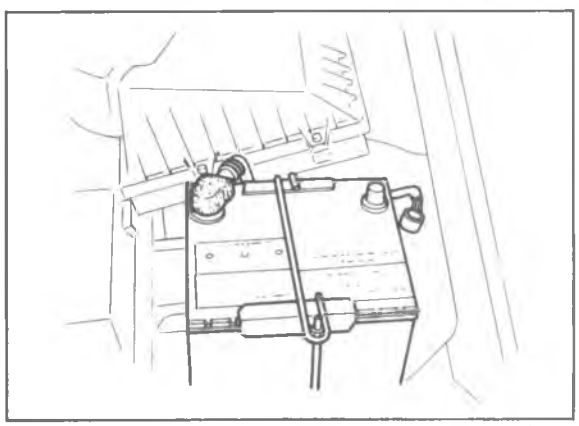

86U04A-194

14. If not correct, replace the throttle sensor.
15. Turn the ignition OFF.
16. Disconnect the **SST** and reconnect the throttle sensor connector.
17. Disconnect the negative battery terminal and depress the brake pedal for at least 5 seconds to eliminate the control unit malfunction memory.

Throttle valve fully closed position (Example)

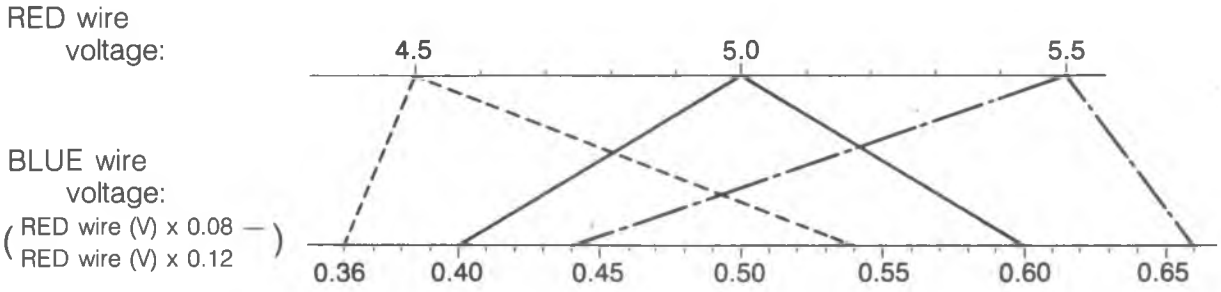

Throttle valve fully open position (Example)

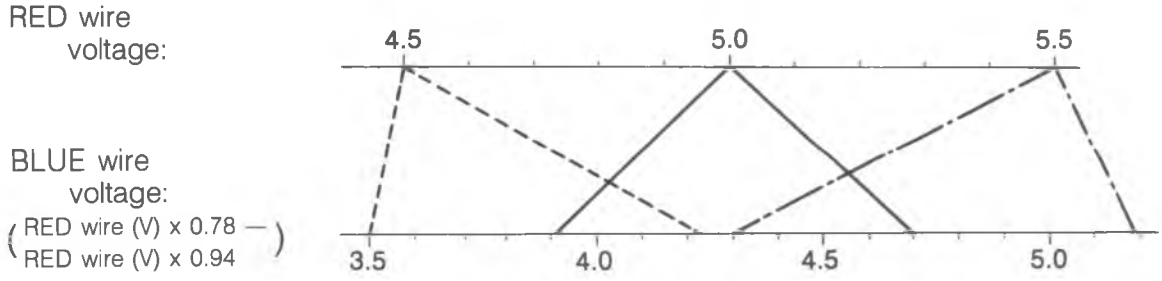

Inspection Steps

Step 1: Throttle valve fully closed position

① Measure RED wire voltage.
② Record RED wire voltage.
③ Measure BLUE wire voltage
④ Verify that BLUE wire voltage is within the specified range.

Step 2: Throttle valve fully open position

⑤ Measure BLUE wire voltage.
⑥ Verify that BLUE wire voltage is within the specified range.

Adjustment

If BLUE wire voltage measured in step 1 exceeds the specific range, adjust or replace the throttle sensor.

86U04A-195

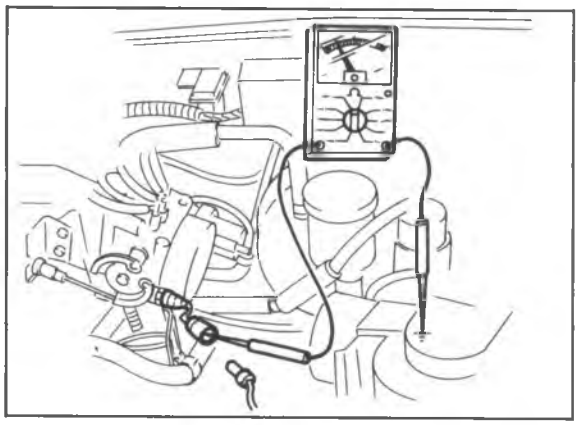

86U04A-196

IDLE SWITCH

Inspection

1. Disconnect the idle switch connector (1-pin).
2. Check continuity between the switch and ground.

Throttle valve condition	Continuity
Fully closed	Yes
Open	No

3. If not correct, check condition of wiring harness of the idle switch. Replace the idle switch and throttle body as an assembly, if necessary.

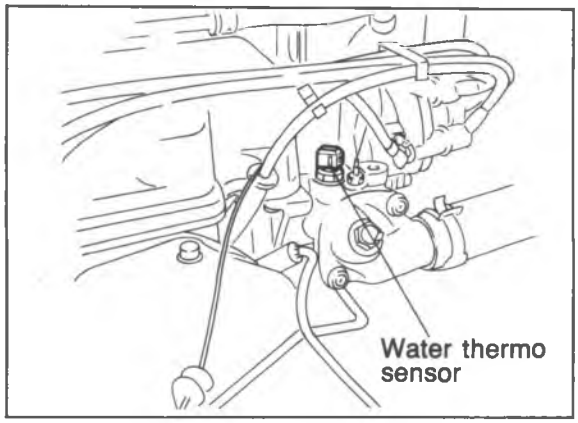

86U04A-202

WATER THERMO SENSOR

Inspection

1. Remove the water thermo sensor from the cylinder head.

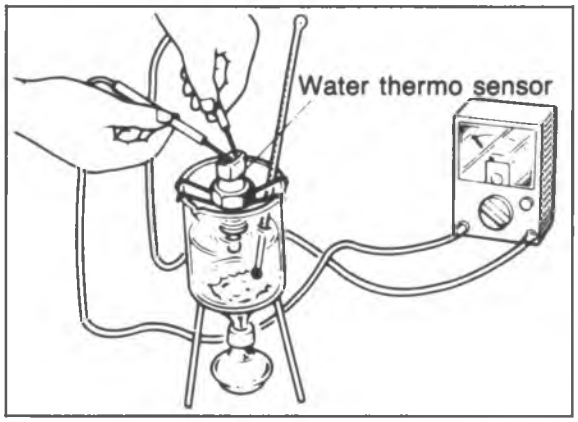

86U04A-203

2. Place the sensor in water with a thermometer and heat the water gradually.
3. Check resistance of the sensor with an ohmmeter.

Coolant	Resistance
–20°C (–4°F)	14.5—17.8 kΩ
20°C (68°F)	2.2—2.7 kΩ
40°C (104°F)	1.0—1.3 kΩ
60°C (140°F)	500—640 Ω
80°C (176°F)	280—350 Ω

4. If not correct, replace the water thermo sensor.

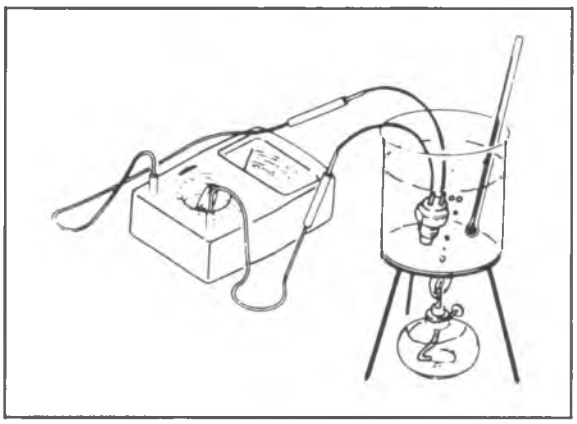

86U04A-204

WATER THERMO SWITCH

Inspection

1. Remove the switch from the radiator.
2. Place the switch in water with a thermometer and heater the water gradually.
3. Check for continuity of the switch with an ohmmeter.

Coolant temp.	Continuity
More than approx. 17°C (63°F)	Yes
Less than approx. 17°C (63°F)	No

4. If not correct, replace the water thermo switch.

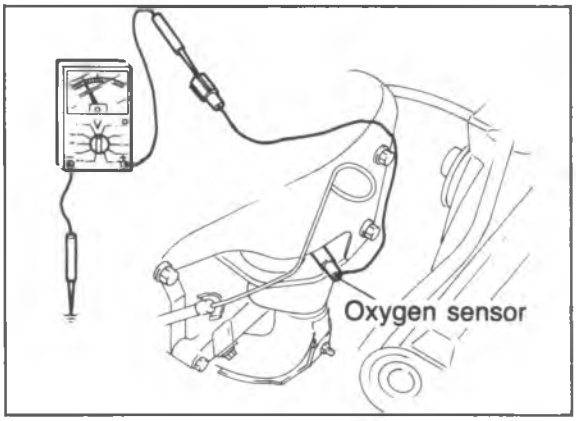

86U04A-205

OXYGEN SENSOR

Inspection of Output Voltage

1. Warm up the engine and run it at idle.
2. Disconnect the oxygen sensor connector.
3. Connect a voltmeter between the oxygen sensor and ground.
4. Run the engine at **4,500 rpm** until the voltmeter indicates **approx. 0.7V**.

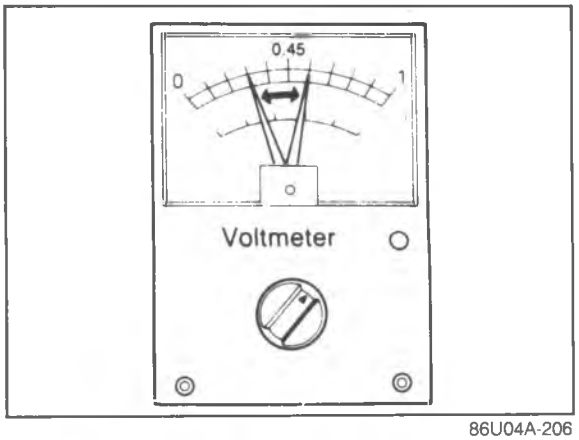

86U04A-206

5. Increase and decrease the engine speed suddenly several times. Check to see that when the speed is increased the meter reads between **0.5V—1.0V**, and when the speed is decreased it reads between **0V—0.4V**.
6. If the voltmeter dosen't indicate as specified, replace the oxygen sensor.

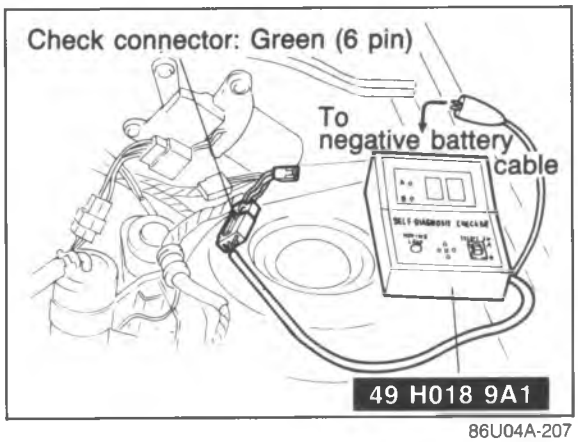

86U04A-207

Inspection of Sensitivity

1. Warm up the engine to the normal operating temperature and run it at idle.
2. Connect the **SST** to the check connector.

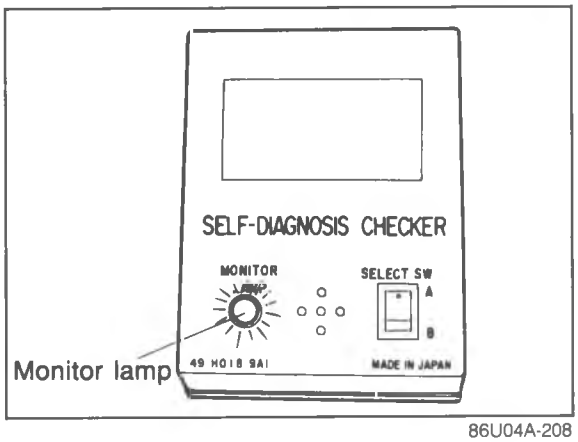

86U04A-208

3. Increase the engine speed to between **2,000 and 3,000 rpm**, and check that the monitor lamp flashes for 10 seconds.

Monitor lamp: Flashes ON and OFF more than 8 times/10 sec

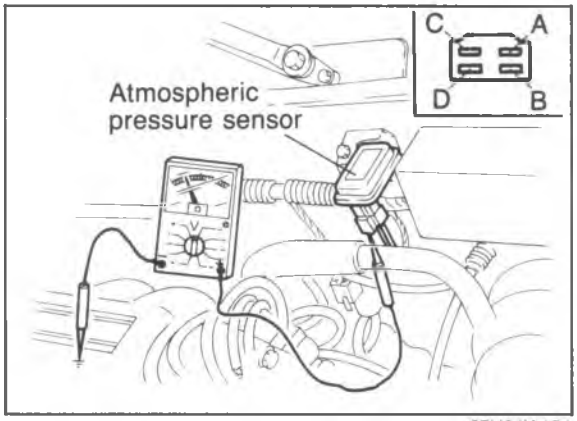

67U04X-154

ATMOSPHERIC PRESSURE SENSOR
Inspection

1. Connect a voltmeter to the atmospheric pressure sensor (D) terminal.
2. Turn the ignition switch on and take a voltage reading.

   Voltage: 3.5—4.5V at sea level
   2.5—3.5V at high altitude
   [2,000m (6,500 ft)]

3. Replace the sensor if necessary.

ENGINE ELECTRICAL SYSTEM

OUTLINE ..... 5— 2
STRUCTURAL VIEW ..... 5— 2
SPECIFICATIONS ..... 5— 3
TROUBLESHOOTING GUIDE ..... 5— 4
BATTERY ..... 5— 5
INSPECTION ..... 5— 5
RECHARGE ..... 5— 5
ALTERNATOR ..... 5— 6
CHARGING SYSTEM ..... 5— 6
TROUBLESHOOTING ..... 5— 7
REMOVAL ..... 5—12
DISASSEMBLY ..... 5—12
INSPECTION ..... 5—16
ASSEMBLY ..... 5—19
INSTALLATION ..... 5—20
V-BELT TENSION ..... 5—20
STARTER ..... 5—21
STARTING SYSTEM ..... 5—21
ON-VEHICLE INSPECTION ..... 5—21
REMOVAL ..... 5—22
DISASSEMBLY ..... 5—22
INSPECTION ..... 5—25
ASSEMBLY ..... 5—29
CHECKING OPERATION ..... 5—30
INSTALLATION ..... 5—31
SPARK PLUGS ..... 5—32
REMOVAL AND INSTALLATION ..... 5—32
INSPECTION ..... 5—32
IGNITION COIL ..... 5—33
INSPECTION ..... 5—33
HIGH-TENSION LEAD ..... 5—33
INSPECTION ..... 5—33
DISTRIBUTOR ..... 5—34
SPARK TEST ..... 5—34
IGNITION TIMING ..... 5—34
SPARK CONTROL ..... 5—35
REMOVAL ..... 5—36
DISASSEMBLY ..... 5—37
INSPECTION ..... 5—38
ASSEMBLY ..... 5—38
INSTALLATION ..... 5—39
H.E.I. TROUBLESHOOTING ..... 5—40
IGNITER ..... 5—41
INSPECTION ..... 5—41
STARTER INTER-LOCK SYSTEM ..... 5—42
INTER-LOCK SWITCH ..... 5—42

86U05X-001

OUTLINE

STRUCTURAL VIEW

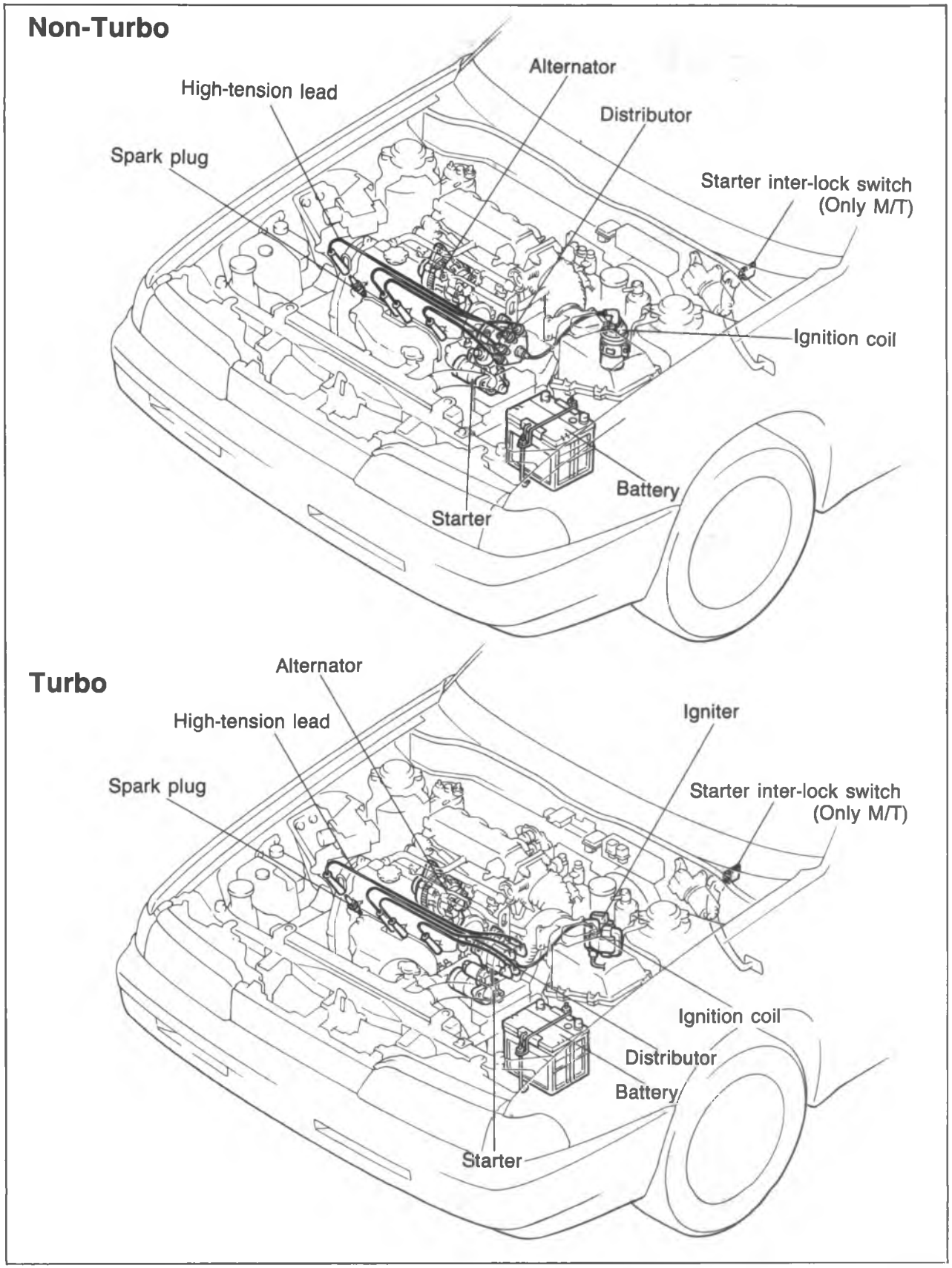

86U05X-002

SPECIFICATIONS

Item			Model: Non-Turbo	Model: Turbo
Battery	Voltage V		12, Negative ground	
	Type and capacity (20 hour rate)		50D20L (50Ah), 55D23L (60Ah) 26RCCA410, 85CCA550	
Alternator	Type		A.C.	
	Output V—A		12—70	
	Regulator type		Transistorized (built-in IC regulator)	
	Regulated voltage V		14.1—14.7	
	Brush length mm (in)	Standard	16.5 (0.650)	
		Minimum	8 (0.315)	
Drive belt tension mm (in)	New		6—8 (0.236—0.315)	
	Used		7—9 (0.276—0.354)	
Starter	Type		Coaxial reduction	
	Output V-kw		12—1.4	
	Brush length mm (in)	Standard	17.5 (0.689)	
		Minimum	10.0 (0.394)	
Ignition Timing			BTDC 6 ± 1° (Vacuum hoses disconnected)	BTDC 9 ± 1°C (Test connector grounded)
Distributor	Type		Fully transistorized (HEI)	Electronic spark advance (ESA)
	Centrifugal spark advance (Crank angle/Engine speed) degree/rpm		–2—2 /1,200 12—16/2,400 12—16/3,500 16—20/4,500	Engine control unit controls spark advance
	Vacuum spark advance (Crank angle/Vacuum force) degree/mmHg (in Hg)		[A chamber] –2—2/110 (4.3) 18—22/275 (10.8) [B chamber] –2—2/110 (4.3) –4—–8/200 (7.9)	
Spark plug	Type		NGK: ZFR5A-11 ZFR6A-11 ZFR7A-11 Nippon Denso: QJ16CR11 QJ20CR11 QJ22CR11	
	Plug gap mm (in)		1.0—1.1 (0.039—0.043)	
Firing order			1—3—4—2	

86U05X-003

TROUBLESHOOTING GUIDE

Problem	Probable Cause	Remedy	Page
Starter does not turn at all, or turns too slow to start engine	Battery and related parts		
	Poor contact of battery terminal(s)	Clean and tighten	5— 5
	Poor grounding of negative cable	Clean and repair	5— 5
	Voltage drop caused by discharged battery	Recharge	5— 5
	Insufficient voltage caused by battery malfunction	Replace	5— 5
	Ignition switch and related parts		
	Poor contact of ignition switch	Replace	Section 15
	Loose ignition switch wiring or connector	Repair	
	Broken wire between ignition switch and magnetic switch	Repair or replace	
	Magnetic switch and related parts		
	Loose wiring and/or connectors	Repair	5—26
	Burnt magnetic switch contact plate or improper contact	Replace	5—26
	Broken wire in magnetic switch pull-in coil	Replace	5—26
	Broken wire in magnetic switch holding coil	Replace	5—26
	Starter motor and related parts		
	Poor contact of brushes	Adjust contact or replace	5—28
	Fatigued brush spring	Replace	5—28
	Commutator malfunction	Repair	5—25
	Grounded armature	Replace	5—25
	Worn parts	Replace	5—25
	Starter inter-lock switch		
	Short circuit of inter-lock system	Replace	5—42
Starting problem	Insufficient battery capacity	Recharge	5— 5
	Malfunction of spark plug(s)	Clean, adjust or replace	5—32
	Loose primary wiring	Tighten	5—33
	Damaged distributor cap or rotor	Replace	5—38
	Ignition coil malfunction	Replace	5—33
	Igniter malfunction	Replace	5—41
Starter turns but engine does not turn	Tip of overrunning clutch pinion worn	Replace	5—27
	Weakened overrunning clutch drive spring	Replace	5—27
	Worn overrunning clutch	Replace	5—27
	Binding on spline	Replace	5—27
	Worn brushing	Replace	5—28
	Worn ring gear	Replace	Section 6
Starter motor turns continuously (does not stop)	Sticking contact plate of magnetic switch	Replace	5—26
	Layer shorting of coil of magnetic switch	Replace	5—26
	Ignition switch does not return	Replace	Section 15
Misfiring of engine	Dirty, damaged or worn spark plug(s)	Clean or replace	5—32
	Malfunction of wiring or poor wiring contact	Replace	Section 15
	Damaged distributor cap	Replace	5—38
Discharging of battery	Loose V-belt	Adjust	5—20
	Grounded or broken stator coil	Replace	5—16
	Broken rotor coil	Replace	5—16
	Poor contact of brush and slip ring	Clean or replace	5—17
	Malfunction of rectifier	Replace	5—18
	Malfunction of IC regulator	Replace	
	Insufficient or unsuitable battery electrolyte	Adjust	5— 5
	Malfunction of battery electrode (internal short circuit)	Replace	5— 5
	Poor contact of battery terminal(s)	Clean and tighten	5— 5
	Excessive electric load	Check power consumption	5— 5
Overcharging of battery	IC regulator malfunction	Replace	
Poor acceleration	Mis-adjusted ignition timing	Adjust	5—34
	Distributor malfunction	Repair or replace	5—38
Knocking	Mis-adjusted ignition timing	Adjust	5—34
	Distributor malfunction	Repair or replace	5—38

86U05X-004

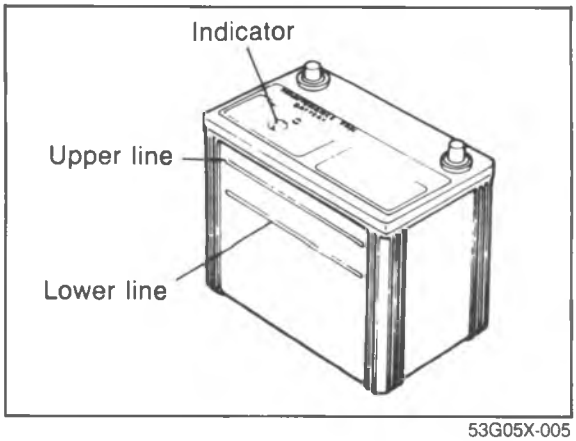

53G05X-005

Temperature [°C(°F)]	Specufuc gravity of electrolyte
–40 (–40)	1.322
–30 (–22)	1.315
–20 (– 4)	1.308
–10 (14)	1.301
0 (32)	1.294
10 (50)	1.287
20 (68)	1.280
30 (86)	1.273
40 (104)	1.266
50 (122)	1.259
60 (140)	1.252
Charged rate: 100%	

86U10X-005

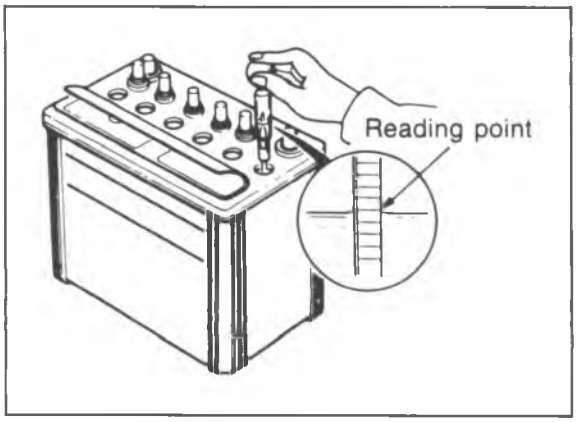

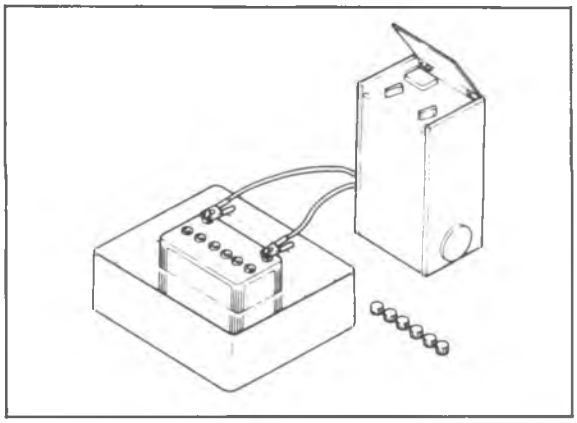

86U05X-006

BATTERY

INSPECTION

Terminal and Cable

1. Check the tightness of the terminals to ensure good electrical connections. Clean the terminals and coat them with grease after tightening the terminal.
2. Inspect for corroded or frayed battery cables.
3. Check the rubber protector on the positive terminal for proper coverage.

Electrolyte Level

1. Check whether or not the electrolyte level lies between the "UPPER LEVEL" and the "LOWER LEVEL" lines.
2. If low, add distilled water by the "UPPER LEVEL". Do not overfill.

Specific Gravity

1. Measure the specific gravity with a hydrometer.
2. If the specific gravity reading is less than specified, recharge the battery.

RECHARGE

1. Remove the battery from the vehicle.
2. Remove all the vent caps.
3. Charge battery.

Slow charge (A)	Quick charge (A)
Under 5	Max. 20

ALTERNATOR

CHARGING SYSTEM

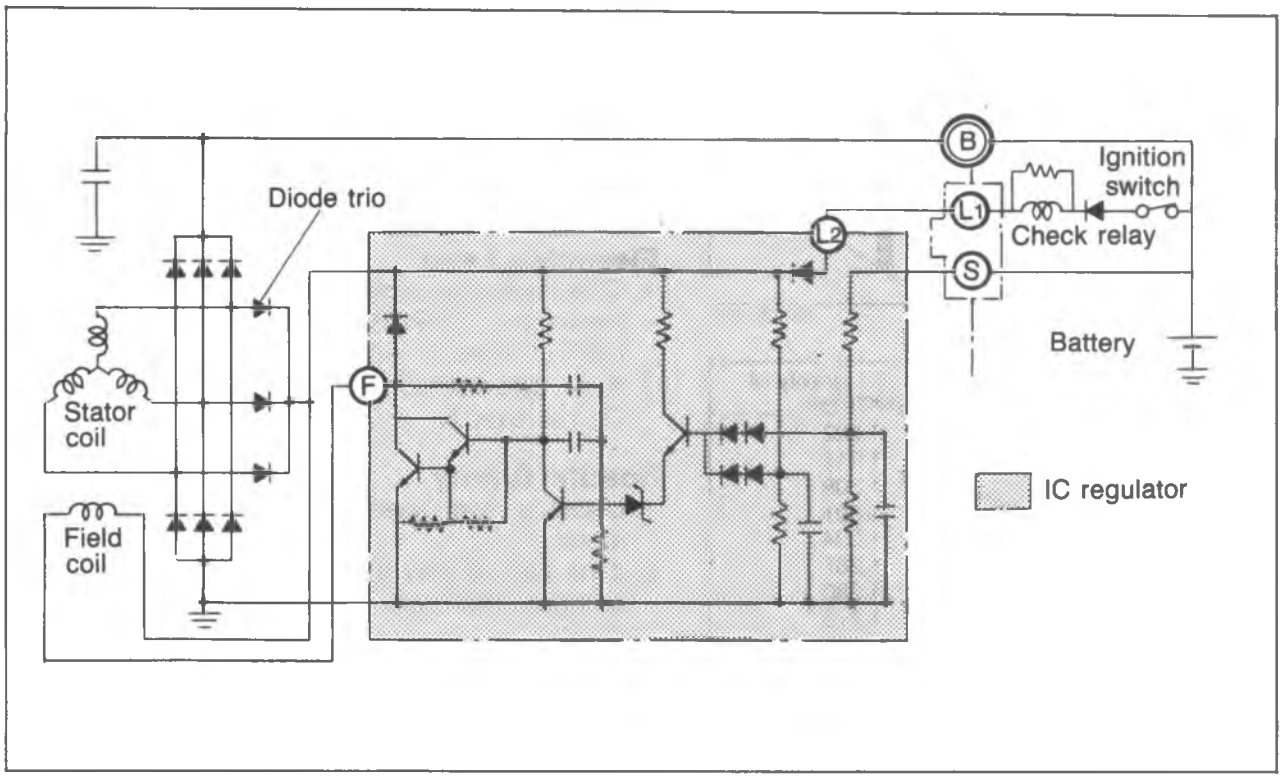

86U05X-007

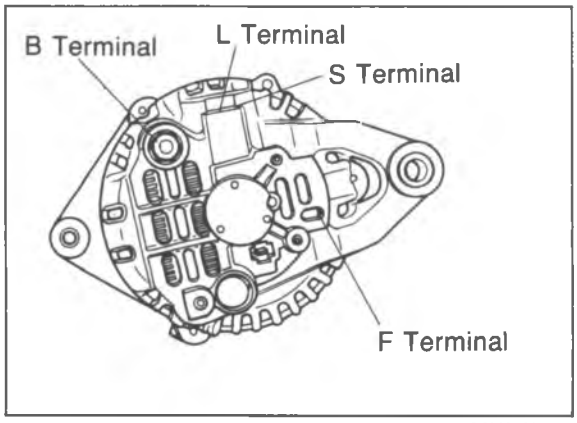

86U05X-008

Caution

a) Be sure the battery connections are not reversed, because this will damage the rectifier.

b) Do not use high-voltage testers such as a megger, because they will damage the rectifier.

c) Remember that battery voltage is always applied to the alternator B terminal.

d) Do not ground the L terminal while the engine is running.

e) Do not start the engine while the connector is disconnected from the L and S terminals.

TROUBLESHOOTING
Preliminary Check

1. Check the indicator on the top of the battery. If the indicator is blue, the battery is normal.
2. If the indicator is not blue, the electrolyte level of the battery is low, or capacity is insufficient, or both. (Refer to page 5—5)
   Charge the battery until the indicator becomes blue, or replace the battery with a fully charged one.
3. Turn the ignition switch ON, and check that the alternator warning light illuminates.

4. Start the engine, and check that the alternator warning light goes off.

86U05X-009

1. Alternator warning light always not illuminate

Check that other warning lights illuminate when ignition switch ON.
- NG → Fuse or wiring harness malfunction.
- OK ↓

Perform TEST 1. (Refer to page 5—9.)
- NG → IC regulator, brush, or field coil malfunction. (Refer to page 5—16.)
- OK ↓

Alternator warning light circuit malfunction.

86U05X-068

2. Alternator warning light illuminates when engine running

Perform TEST 2. (Refer to page 5—9.)
- OK → Wiring harness malfunction.
- NG ↓

Perform TEST 1. (Refer to page 5—9.)
- NG → IC regulator, brush, or field coil malfunction. (Refer to page 5—16.)
- OK ↓

Perform TEST 5. (Refer to page 5—10.)
- NG → IC regulator, field coil, or brush malfunction. (Refer to page 5—16 or 5—17.)
- OK ↓

a) Poor connection of negative battery cable
b) Poor connection between alternator connector (2-pin) and positive battery terminal
c) Stator coil or diodes malfunction (Refer to page 5—16 or 5—18)

86U05X-069

3. Alternator warning light operates properly, but battery discharged

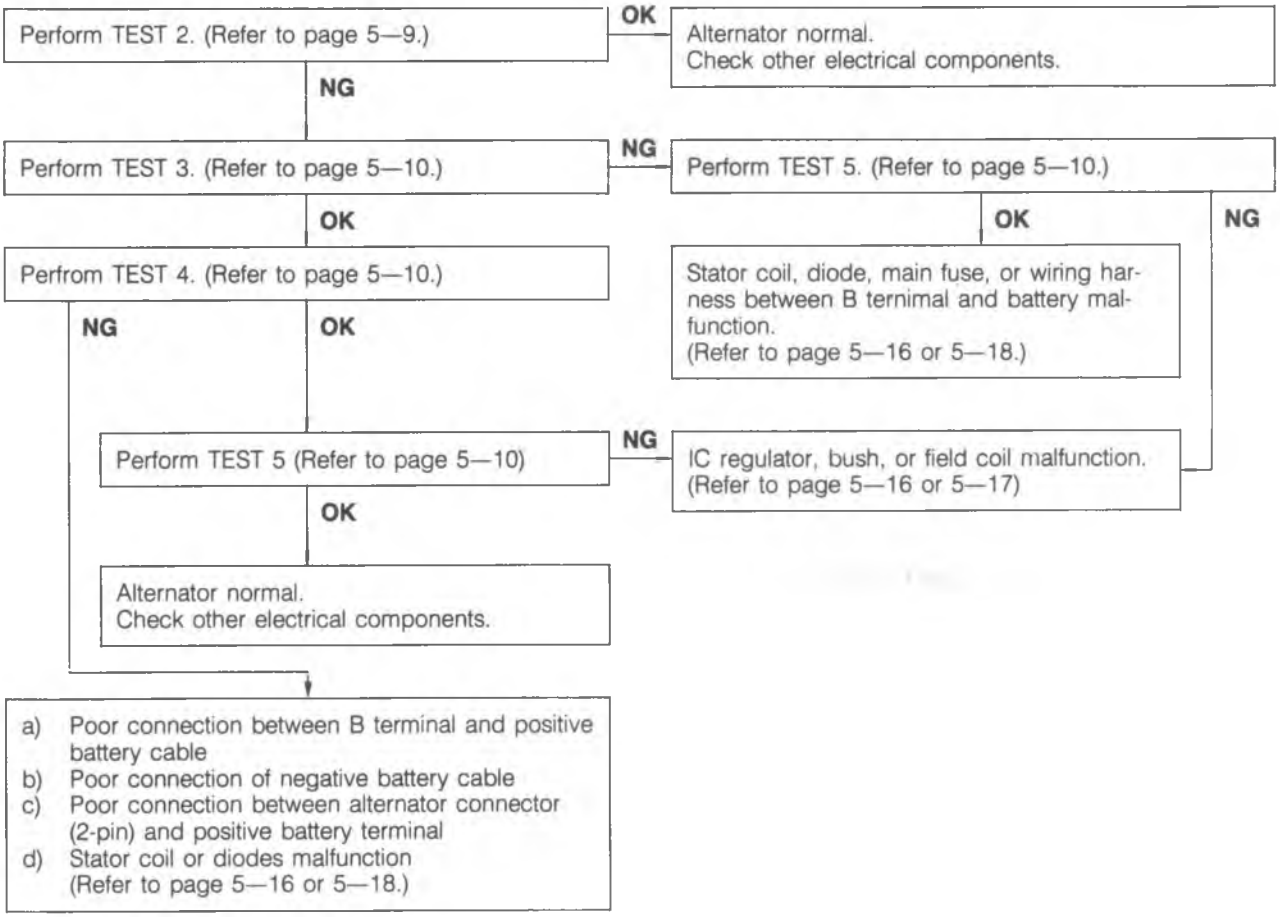

86U05X-070

4. Battery overcharged

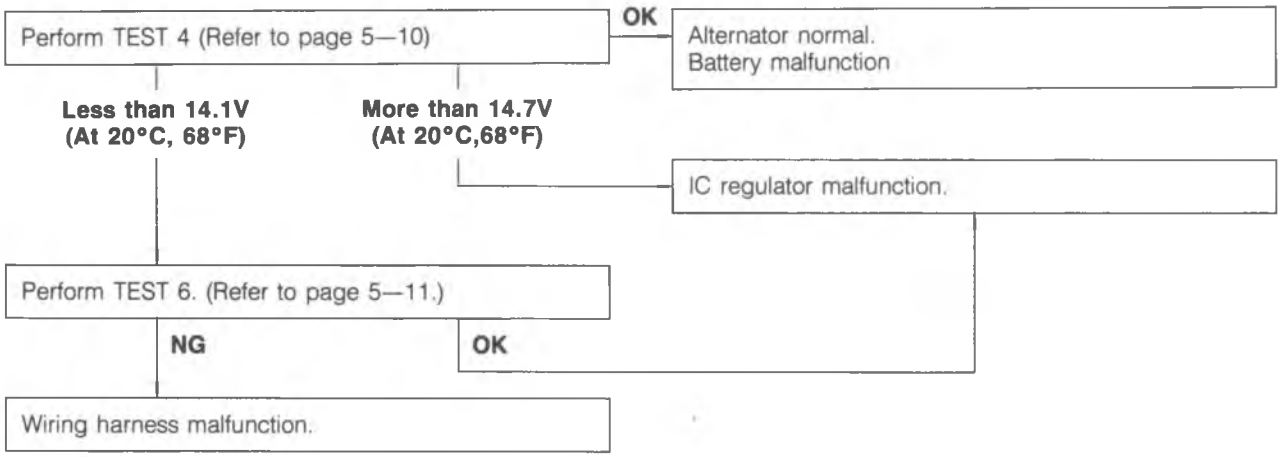

86U05X-071

Warning
Disconnect the nagative battery terminal when disconnect or reconnect B terminal.

TEST 1

1. Disconnect the alternator connector (2-pin).
2. Connect the **SST**.

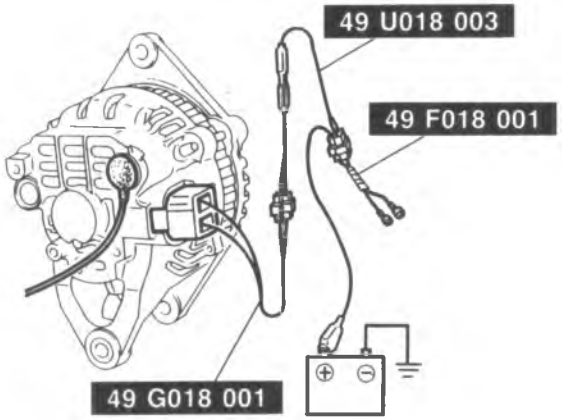

4. Connect the red clip of the adapter harness to the battery (+), and check that the red lamp and green lamp illuminate.
5. Start the engine and check that both lamps go off.

86U05X-010

TEST 2

1. Connect an ammeter **(65A min.)** between the wire and the B terminal.
2. Turn all headlights and accessories on, and depress the brake pedal.
3. Start the engine and check that output current is **65A or more** at **2,500—3,000 rpm** of the engine speed.

Caution
Do not ground the B terminal.

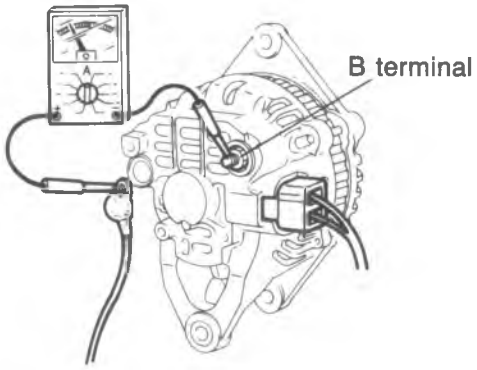

86U05X-012

TEST 3

1. Turn all electric loads off and release the brake pedal.
2. Check that output current is **5A or more** at **2,500—3,000 rpm** of the engine speed.

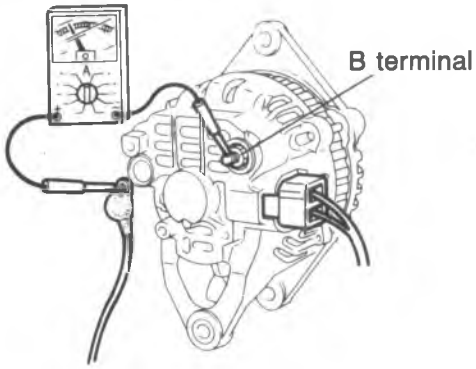

86U05X-013

TEST 4

1. Turn all electric loads off and release the brake pedal.
2. Check that output voltage between S terminal and ground is within specification at **2,500—3,000 rpm** of the engin speed.

Voltage: 14.1—14.7V

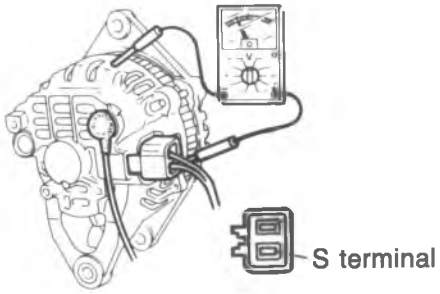

86U05X-072

TEST 5

1. Turn the ignition switch ON.
2. Check that L terminal voltage is within specification.

Voltage: 1—5V

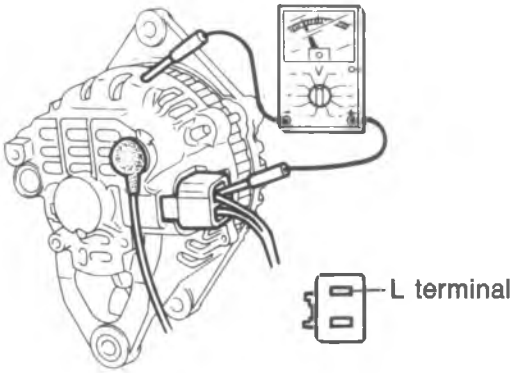

86U05X-073

TEST 6

1. Turn the ignition switch ON.
2. Turn all electric loads off and release the brake pedal.
3. Check that voltage between S terminal and ground is battery voltage.

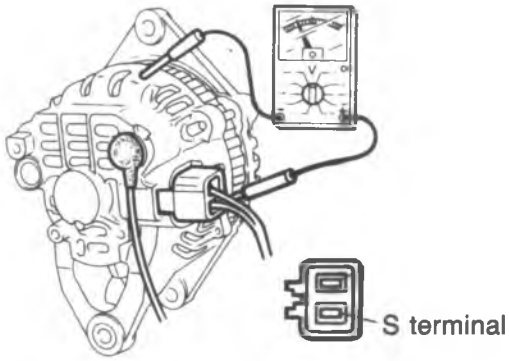

86U05X-074

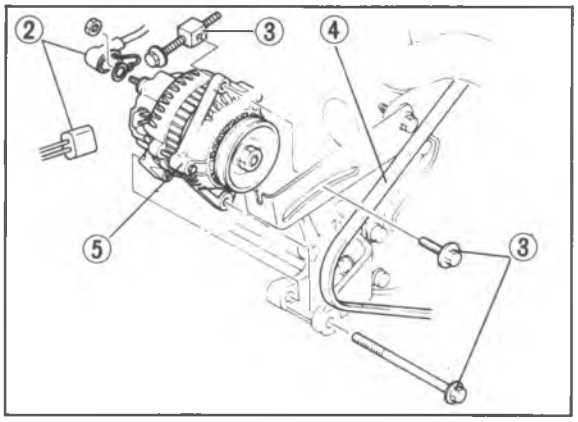

86U05X-018

REMOVAL

Remove in the sequence shown in the figure.

1. Disconnect the negative battery terminal.
2. Disconnect the wire and connector from the alternator.
3. Remove the bolts.
4. Remove the V-belt.
5. Remove the alternator to upper side.

DISASSEMBLY

Disassemble in the sequence shown in the figure.

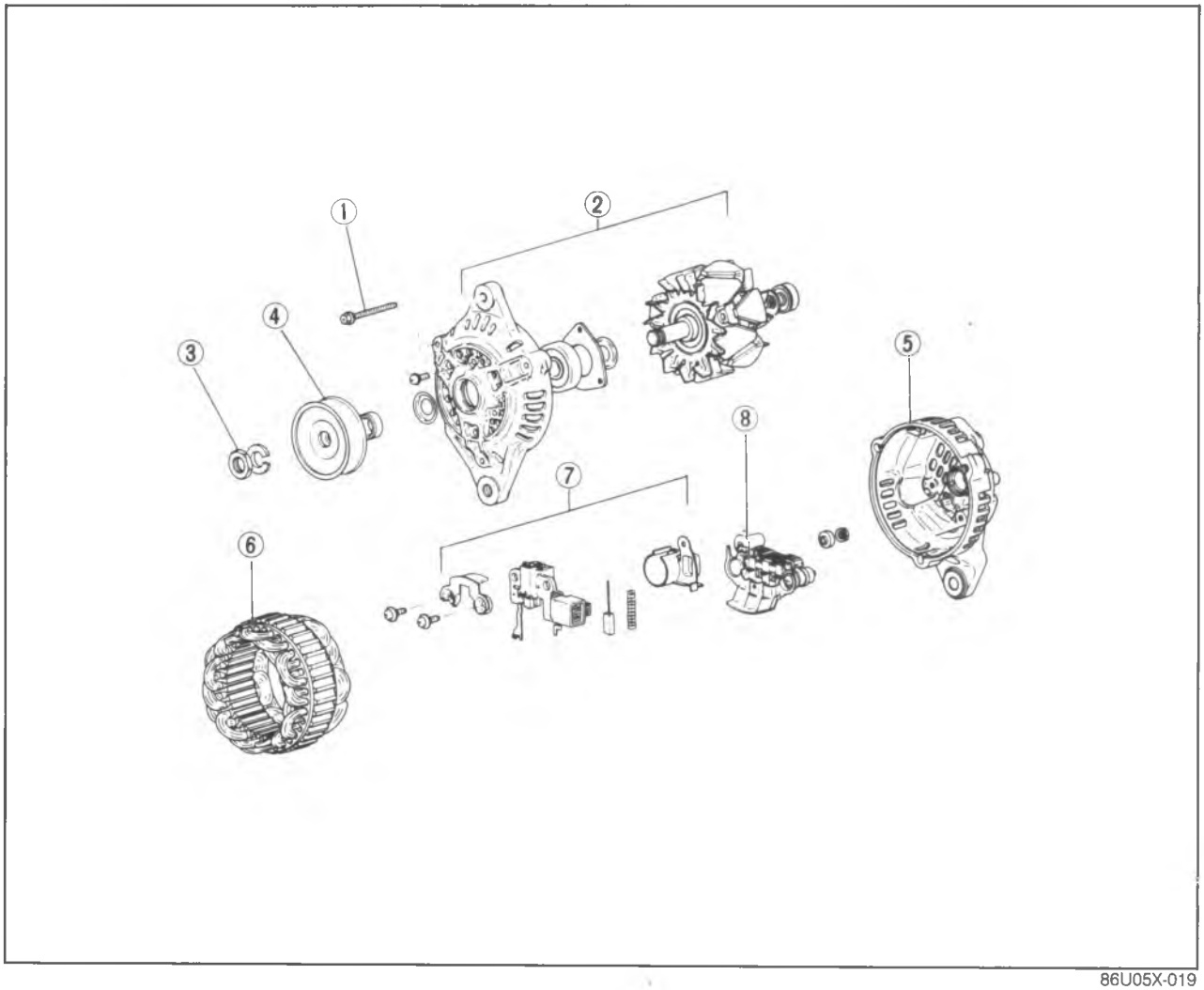

86U05X-019

1. Bolt
2. Front bracket and rotor
3. Lock nut
4. Pulley
5. Rear bracket
6. Stator
7. Brush holder assembly
8. Rectifier

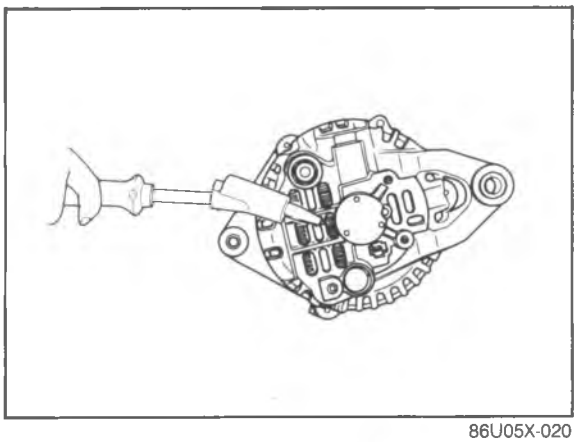

86U05X-020

1. Place a soldering iron (200W) on the bearing box for **3 or 4 minutes** to heat it to about **50—60°C (122—140°F).**
   Pull out the three bolts, and then insert a screwdriver between the stator and front bracket and separate them.

   Note
   a) If the bearing box is not heated, the bearing cannot be pulled out because the rear bearing and rear bracket fit together very tightly.
   b) Be careful not to force the screwdriver in too far. The stator may become scratched.

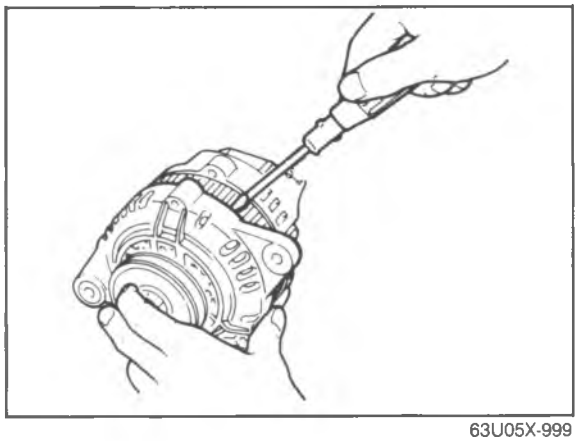

63U05X-999

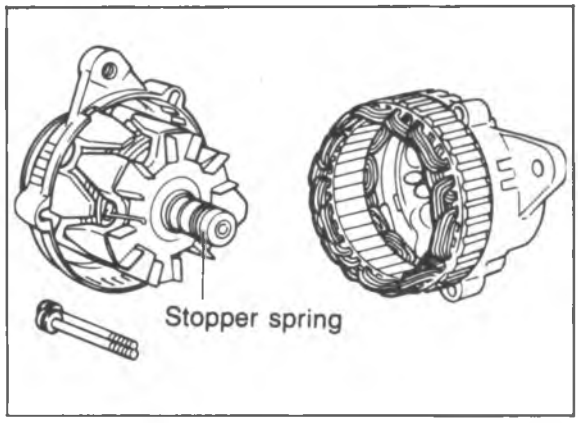

5BU05X-057

2. Separate the rear and front sections.

   Note
   Be careful not to lose the stopper spring that fits around the circumference of the rear bearing.

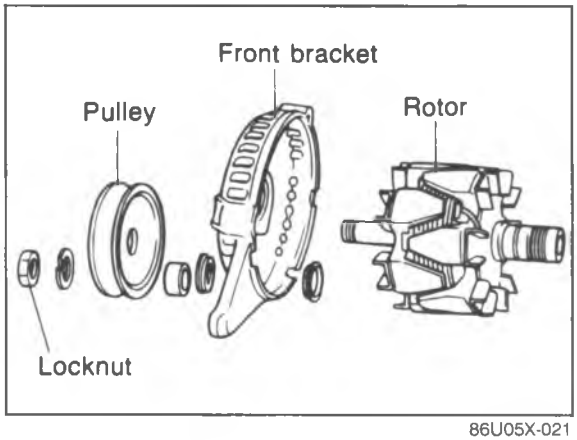

86U05X-021

3. Place the rotor in a vise and loosen the pulley nut, then disassemble the pulley, rotor, and front bracket.

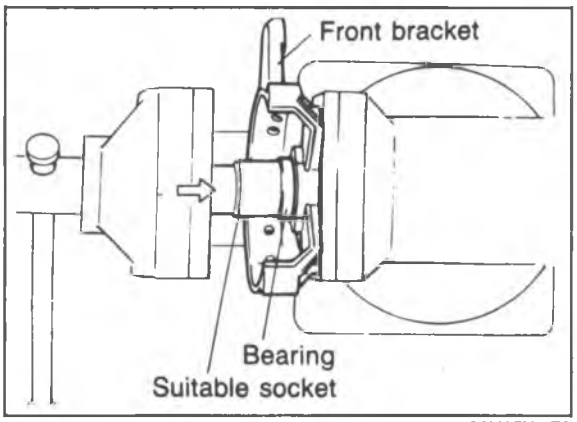

86U05X-076

4. Replace the front bearing
   Using a socket which exactly fits on the outer race of the bearing, carefully press in the bearing. Use a hand press or a vise.

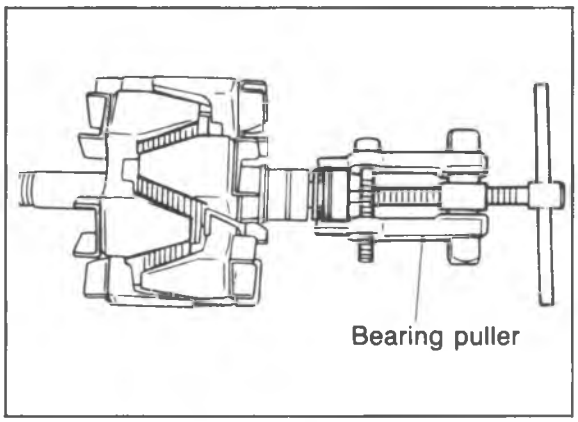

86U05X-086

5. Replace the rear bearing
   The bearing can be pulled off by using a bearing puller.
   When it is pressed on, press it on so that the groove at the bearing circumference is at the slip ring side.

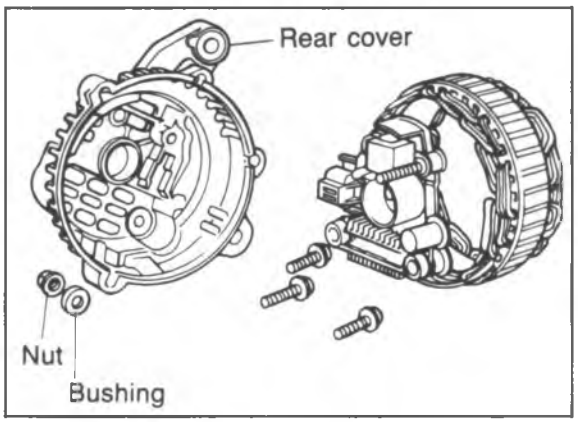

86U05X-077

6. Remove the nut of the B terminal and the insulation bushing.
7. Remove the rectifier holding screws and the brush holder holding screw.
8. Separate the rear bracket and the stator.

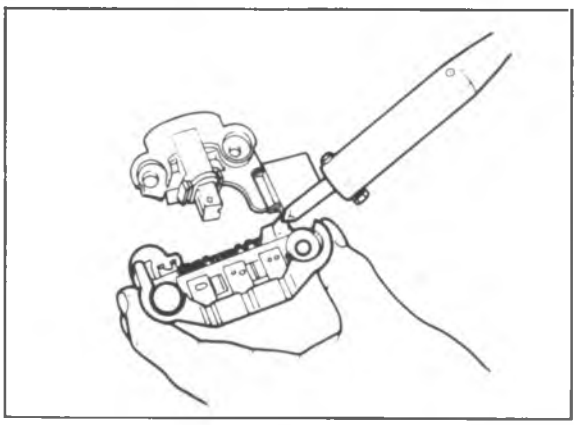

86U05X-087

9. Use a soldering iron to remove the solder from the rectifier and the stator leads, and then remove the IC regulator.

   Caution
   Disconnect quickly, use the soldering iron no more than about 5 seconds because the rectifier may be damaged if it is overheated.

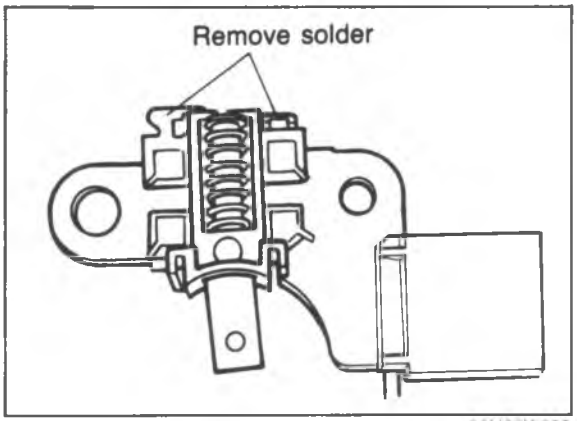

86U05X-088

10. Replace the brushes
    Remove the solder from the pigtail, and then remove the brush.

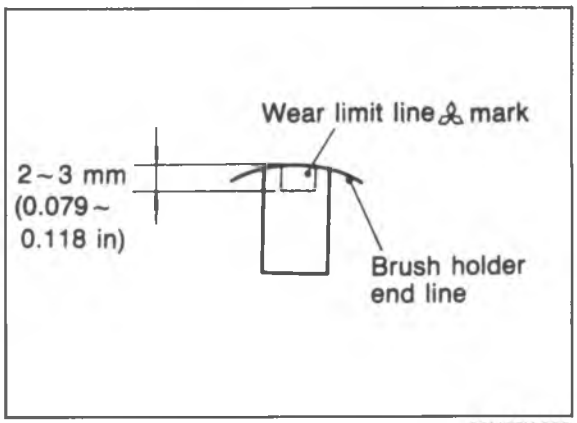

86U05X-089

11. When soldering the brush, solder the pigtail so that the wear limit line of the brush projects **2—3 mm (0.079—0.118 in)** out from the end of the brush holder.

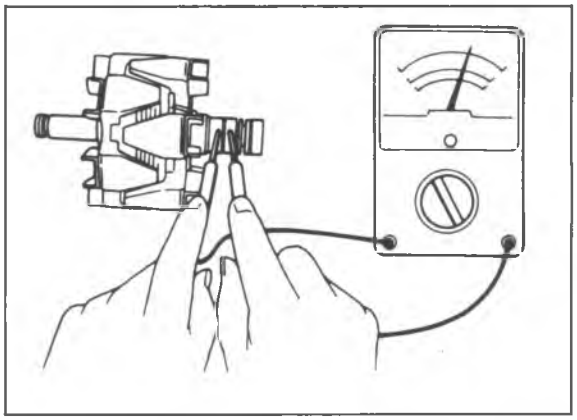

86U05X-078

INSPECTION

Rotor

1. Wiring damage
   (1) Check the resistance between the slip rings using an ohmmeter.

   Specification: 2—6 Ω

   (2) If it is not within specification, replace the rotor

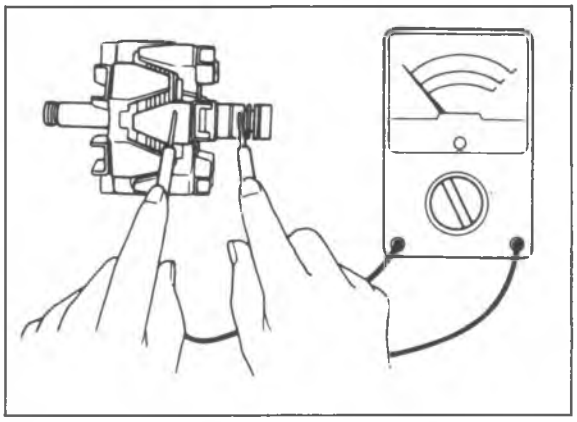

86U05X-080

2. Ground of the field coil
   (1) Check for continuity between the slip ring and the core using an ohmmeter.
   (2) Replace the rotor if there is continuity.

3. Slip ring surface
   If the slip ring surface is rough, use a lathe or fine sandpaper to repair it.

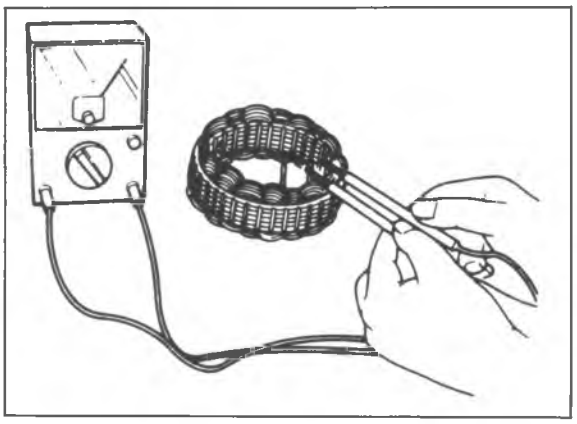

86U05X-081

Stator

1. Wiring damage
   (1) Check for continuity between the stator coil leads using an ohmmeter.
   (2) Replace the stator if there is no continuity.

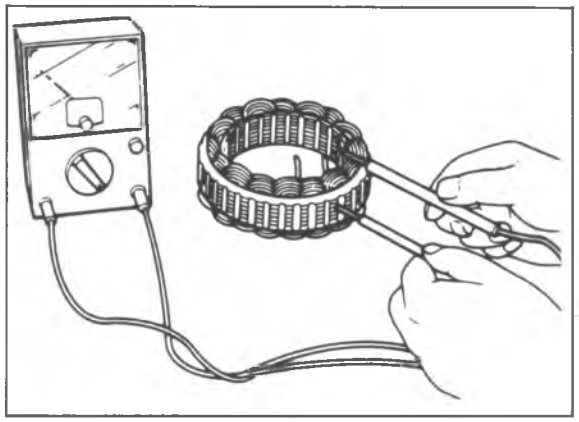

86U05X-082

2. Ground of the stator coil
   (1) Check for continuity between the stator coil leads and the core using a circuit tester.
   (2) Replace the stator if there is continuity.

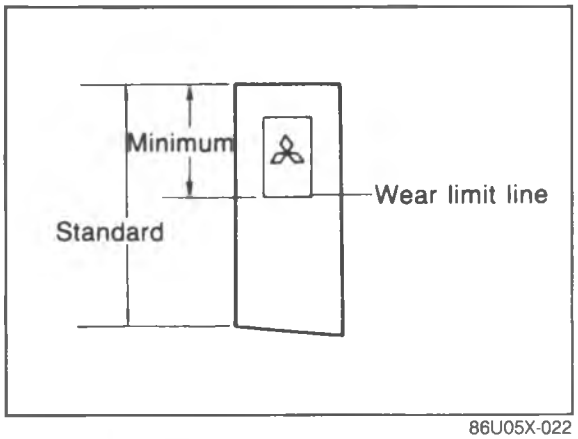

86U05X-022

Brush

If the brushes are worn almost to or beyond the limit, replace them.

Standard: 16.5 mm (0.650 in)
Minimum: 8 mm (0.315 in)

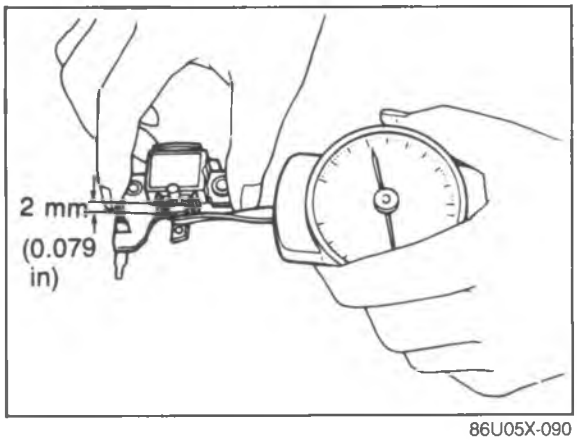

86U05X-090

Brush Spring

1. Measure the force of the brush spring using a spring pressure gauge.
2. Replace the spring if necessary.

Standard force: 3.0—4.2 N
(310—430 g, 10.9—15.2 oz)
Minimum: 1.7—2.5 N
(170—250 g, 6.0—8.8 oz)

Note
Read the spring pressure gauge at the brush tip projection of 2 mm (0.079 in).

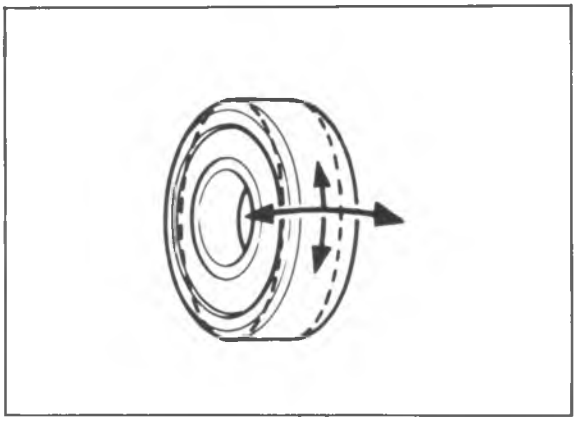

86U05X-023

Bearing

1. Check for abnormal noise, looseness, or insufficient lubrication.
2. Replace the bearing(s) if there is any abnormality.

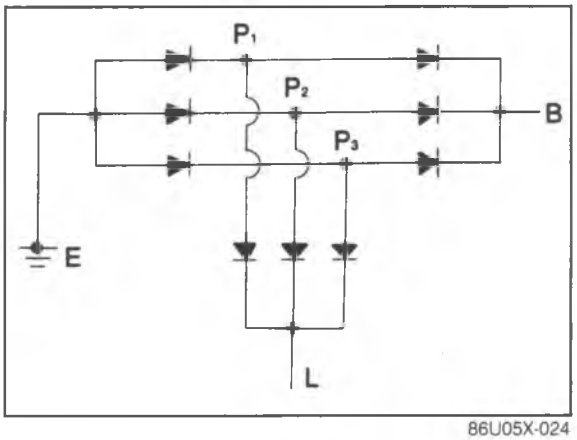

86U05X-024

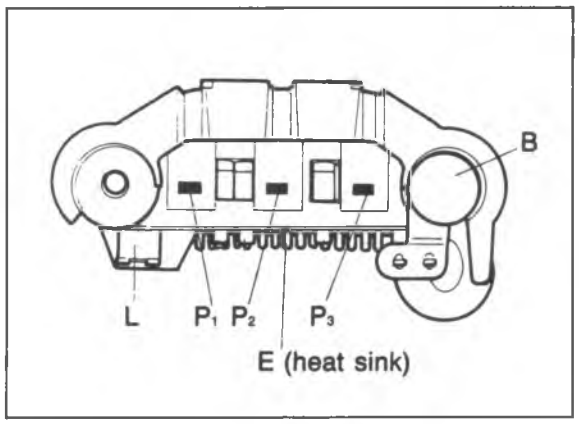

86U05X-025

Rectifier

1. Check for continuity of the diodes using an ohmmeter.

Negative (Black)	Positive (Red)	Continuity
E	P_1, P_2, P_3	Yes
B		No
L		No
P_1, P_2, P_3	E	No
	B	Yes
	L	Yes

2. Replace the rectifier.

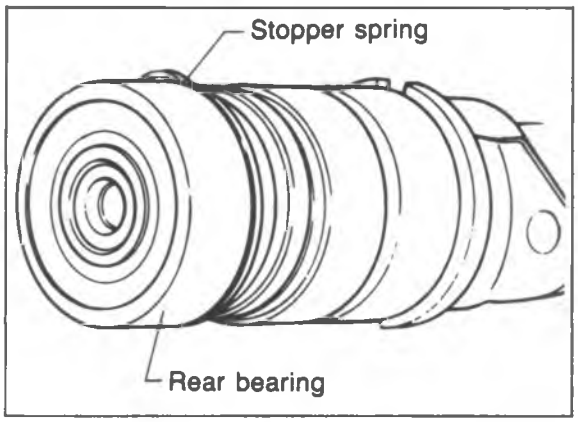

86U05X-026

ASSEMBLY

Assemble in the reverse order of disassembly, referring to assembly note.

Assembly Note

Stopper spring installation

1. Fit the stopper spring into the eccentric groove of the rear bearing circumference.
2. Check that the protruding part of the spring is fitted into the deepest part of the groove.

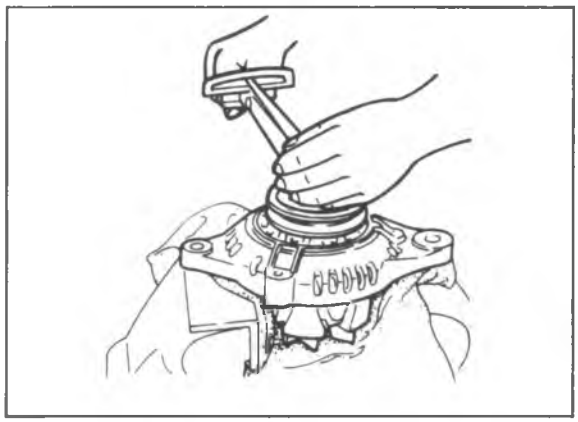
86U05X-027

Front bracket and rotor

When assembling the front bracket and rotor, tighten the locknut to the specified torque.

Tightening torque:
49—88 N·m (5—9 m-kg, 36—65 ft-lb)

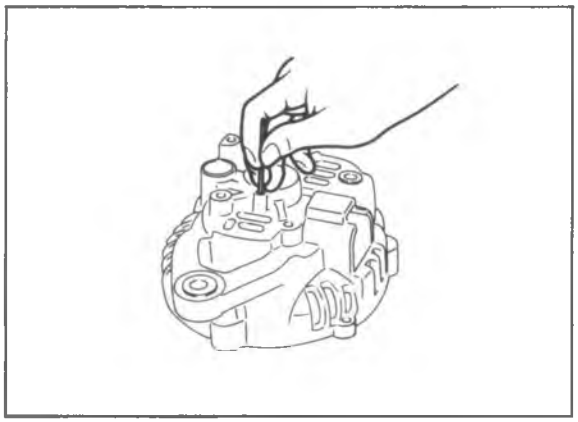
86U05X-028

Brush lifting

1. Before assembly, use a finger to hold the brushes into the brush holder; then pass a wire (**ϕ2 mm, 40—50 mm, ϕ0.08 in, 1.6—2.0 in**) through the hole shown in the figure.
2. Secure the brushes in position.

Note
Be sure to remore wire after assembly is completed.

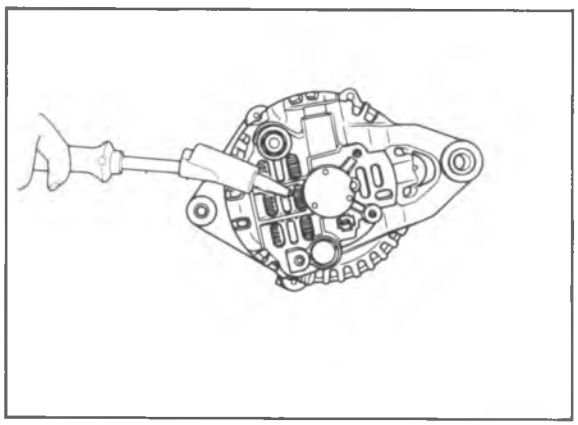
4BG05X-054

Rear bearing installation

1. Heat the rear bracket.
2. Press the rear bearing into the rear bracket.
3. Check that the rotor turns easily.

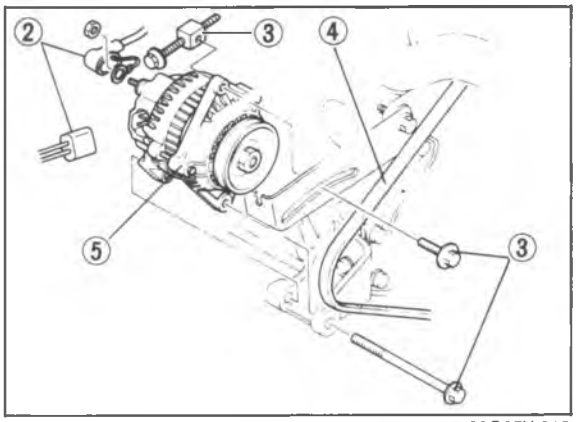

69G05X-018

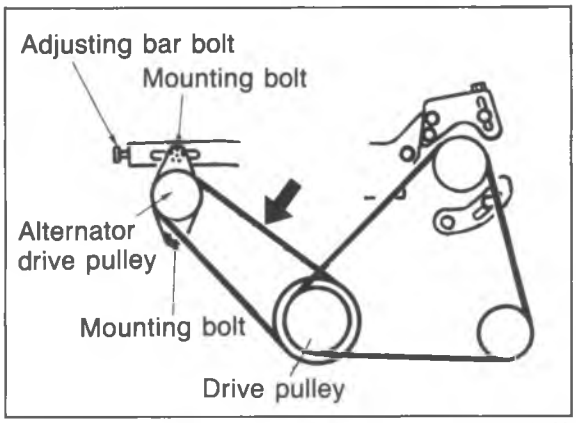

86U05X-029

INSTALLATION

Note
When installing the alternator, tighten the bolts to the specified torque.

Install in the reverse order of removal.

Tightening torque:
Bolt (1).....37.3—52 N·m
(3.8—5.3 m-kg, 27.5—38.3 ft-lb)
Bolt (2).....18.6—25.5 N·m
(1.9—2.6 m-kg, 13.7—18.8 ft-lb)

V-BELT TENSION

Adjustment

1. Loosen the alternator mounting bolt and adjusting bar bolt.
2. Adjust the alternator to set to the specified deflection when pushing the V-belt with a force of 98 N (10 kg, 22 ft-lb).

Specified deflection
New: 6—8 mm (0.24—0.31 in)
Used: 7—9 mm (0.27—0.35 in)

3. Tighten the bolts and recheck the tension.

STARTER

STARTING SYSTEM

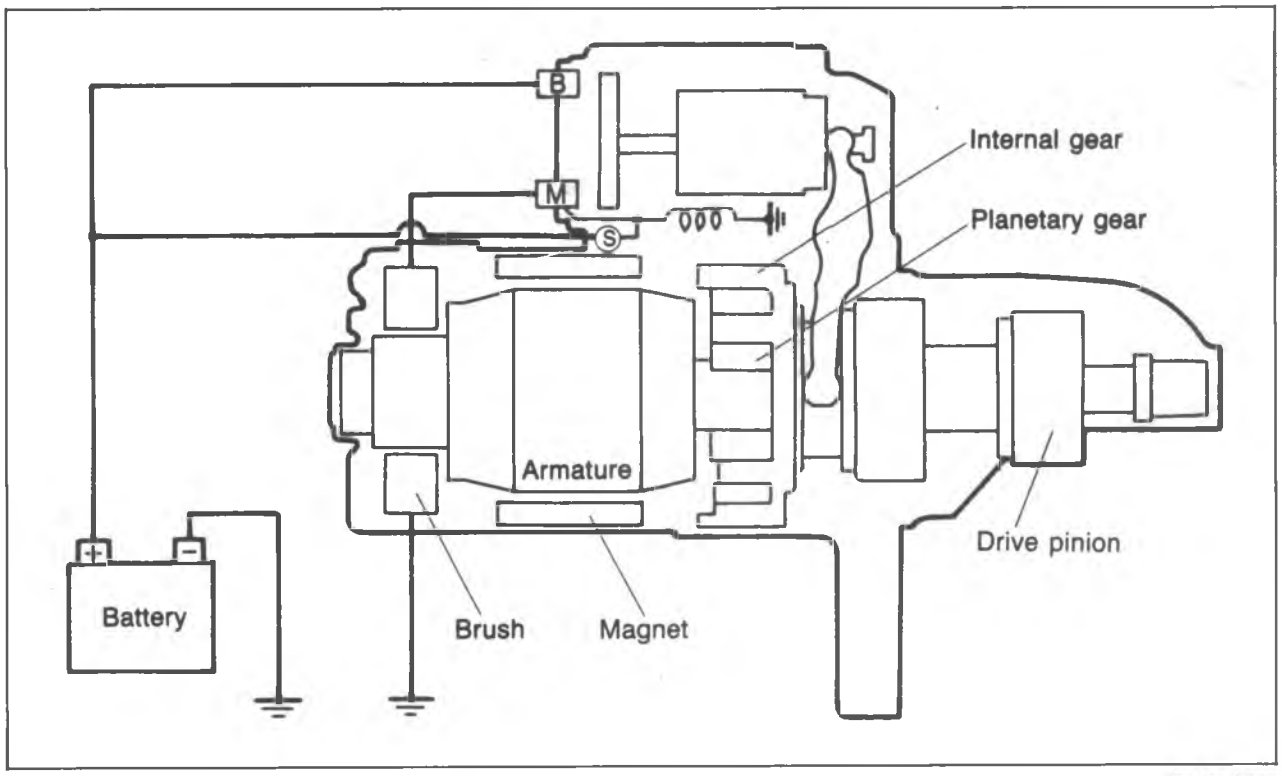

86U05X-030

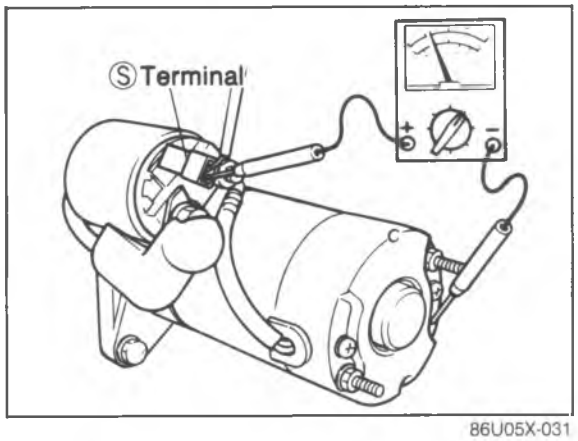

86U05X-031

ON-VEHICLE INSPECTION

Charge the battery fully before starting the following inspection.

1. Turn the ignition switch to the start position.
2. Check that the starter motor operates.
3. If the starter does not operate, check the voltage between S terminal and ground using a voltmeter.
4. If the voltage is 8V or more, the starter is malfunction.
5. If less than 8V, the wiring harness is malfunction.

Caution
If the magnetic switch is hot, it may not function even though the voltage is standard voltage or more.

Note
The cranking speed is greatly affected by the viscosity of the engine oil.

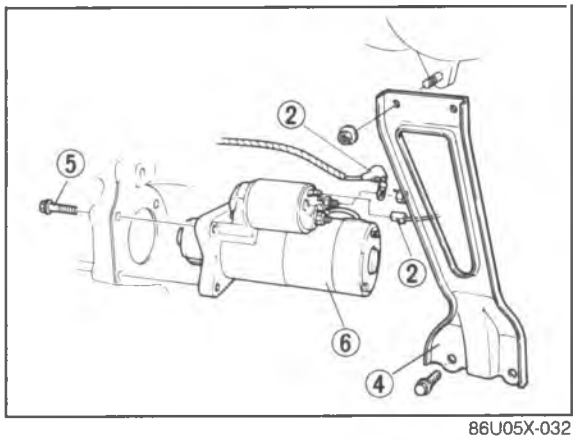

86U05X-032

REMOVAL

1. Disconnect the negative battery cable.
2. Disconnect the wiring from the starter.
3. Raise the front of the vehicle and support it with safety stands.
4. Remove the intake manifold bracket.
5. Remove the starter bolts.
6. Draw out the starter from lower side of the vehicle.

Note
Remove the lowest starter bolt last.

DISASSEMBLY

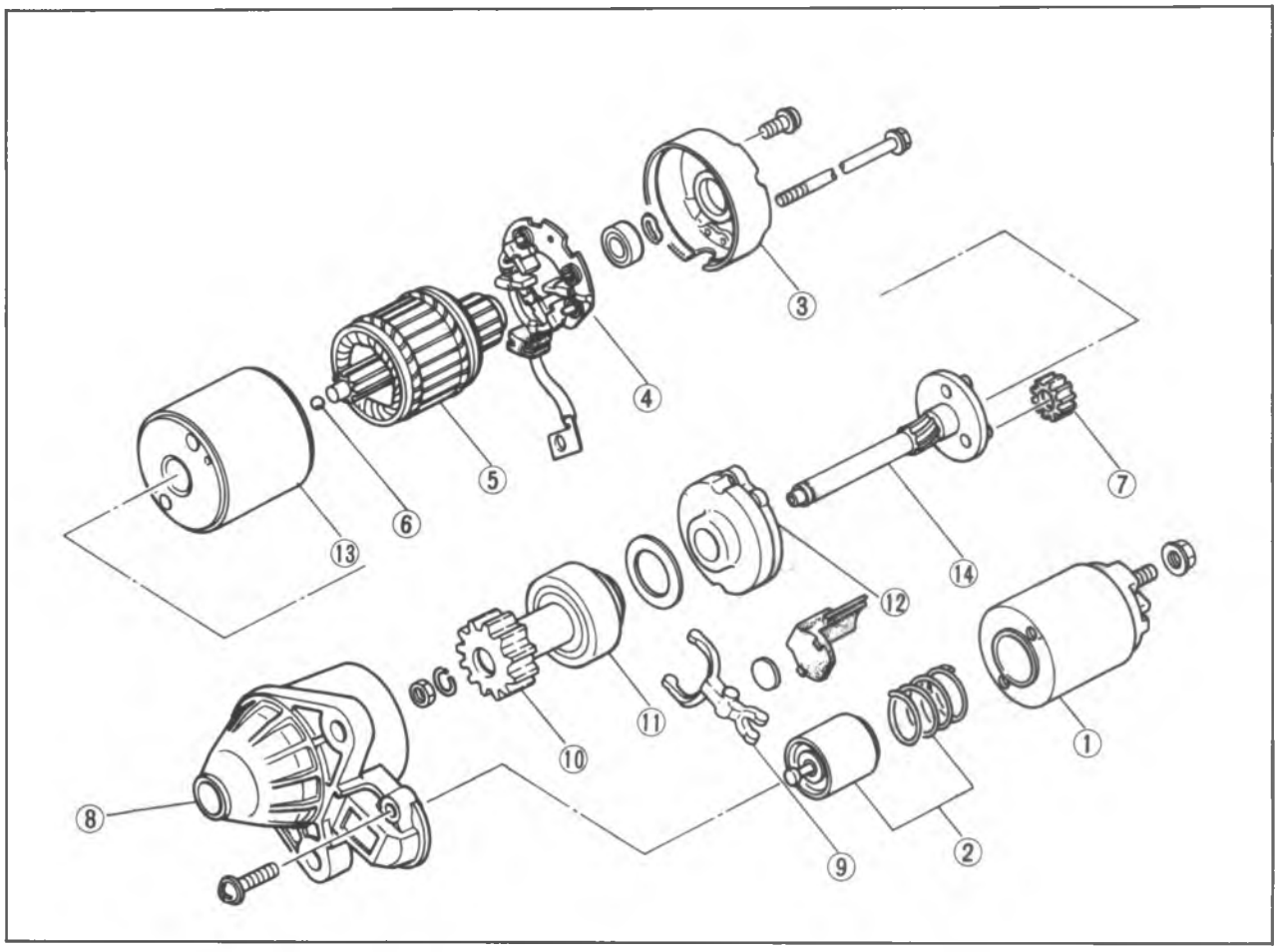

86U05X-083

1. Magnetic switch
2. Plunger and spring
3. Rear housing
4. Brush holder assembly
5. Armature
6. Ball
7. Planetary gear
8. Drive housing front cover
9. Lever
10. Drive pinion
11. Overrunning clutch
12. Internal gear
13. Yoke assembly
14. Gear shaft

Caution
Do not strike the yoke with a hammer, drop it or put it in a vise when disassembling the starter.

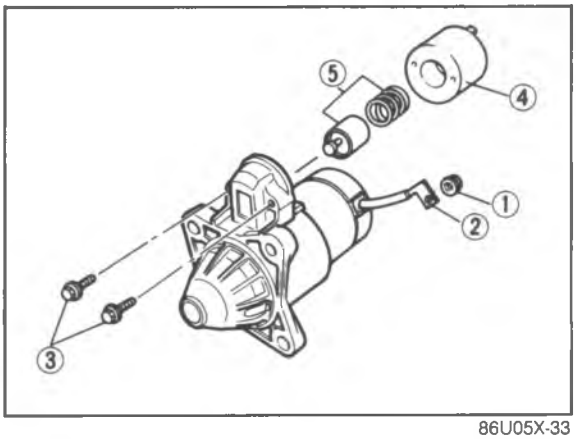

86U05X-33

Magnetic Switch
Remove the following parts:
(1) M terminal nut
(2) Wire
(3) Switch installation screws
(4) Magnetic switch
(5) Plunger and plunger spring

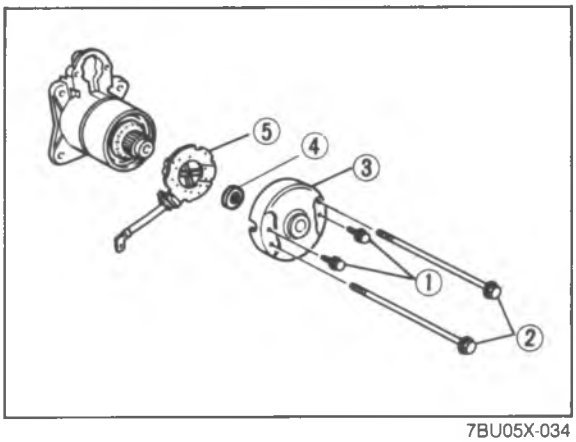

7BU05X-034

Rear Bracket and Brush Holder
Remove the following parts:
(1) Brush holder installation screws
(2) Through bolts
(3) Rear cover
(4) Wave washer
(5) Brush holder assembly

Note
Put an aligning mark on the yoke and rear bracket for reassembly before removing the rear bracket.

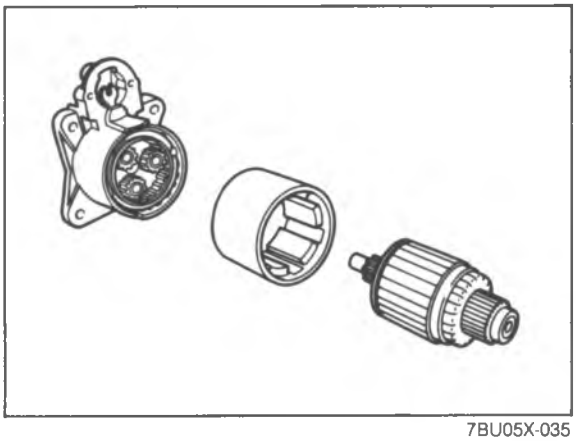
7BU05X-035

Yoke and Armature
Remove the armature and yoke.

Note
Put an aligning mark on the yoke and front bracket for reassembly before removing the front bracket.

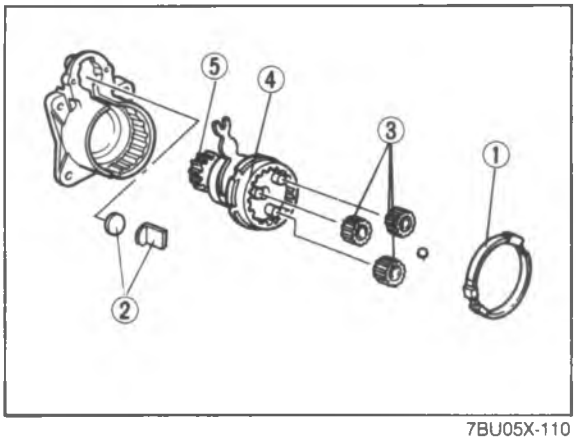

7BU05X-110

Overrunning Clutch, Planetary Gears, and Internal Gear.
Remove the following parts:
(1) Gasket
(2) Plate
(3) Planetary gears
(4) Internal gear
(5) Drive pinion

Note
Do not lose the ball.

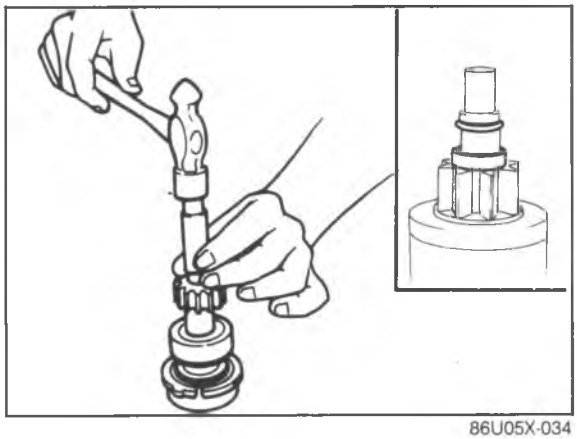

86U05X-034

Overrunning Clutch Stopper

1. Remove the overrunning clutch stopper using a pipe.

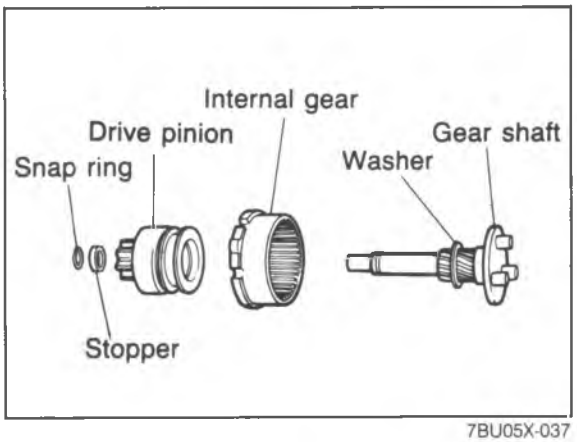

7BU05X-037

2. Disassemble the drive pinion, internal gear and washer from the gear shaft.

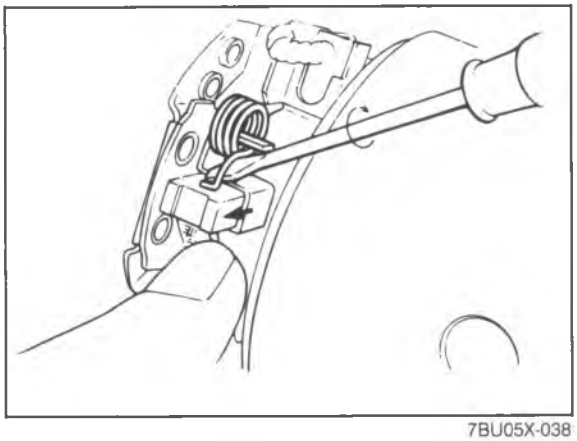

7BU05X-038

Brush and Brush Holder

Remove the brush from the brush holder using a flat-tip screwdriver.

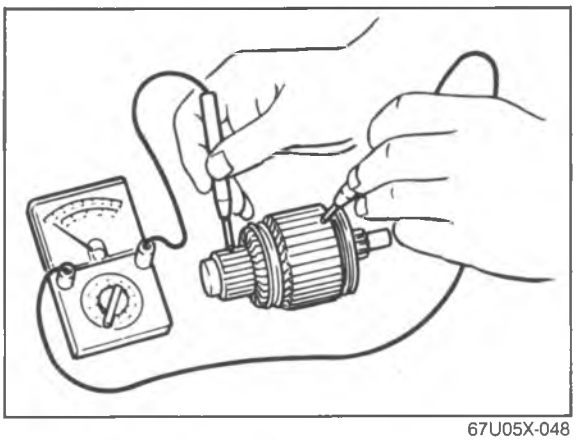

67U05X-048

INSPECTION

Armature

1. Ground of armature coil
   Check for continuity between the commutator and the core using a circuit tester. Replace the armature if there is continuity.

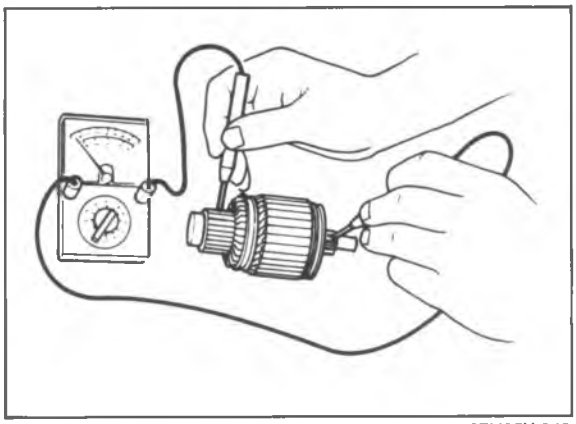

67U05X-049

2. Insulation of armature coil
   Check for continuity between the commutator and the shaft using a circuit tester. Replace the armature if there is continuity.

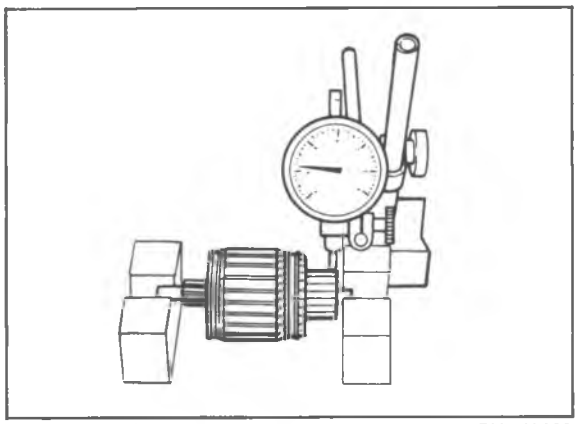

7BU05X-039

3. Runout of commutator
   (1) Place the armature on V blocks, and measure the runout using a dial gauge.
   (2) If the runout is excessive, replace the armature.

   Runout: 0.05 mm (0.002 in)
   Maximum: 0.1 mm (0.004 in)

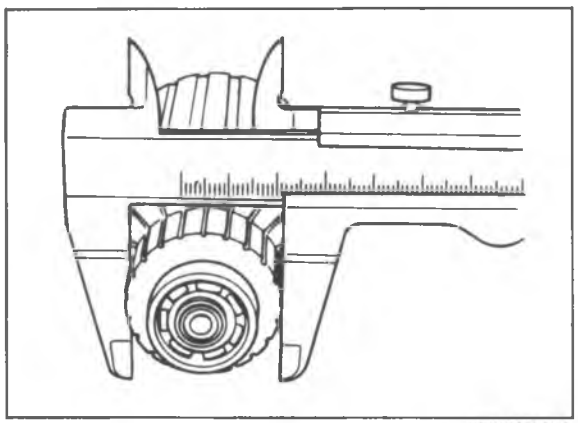

7BU05X-040

4. Outer diameter of commutator
   Replace the armature if the outer diameter of the commutator is less than the grind limit.
5. Roughness of commutator surface
   Repair using a lathe or fine sandpaper if it is rough; wipe it with a rag if it is dirty.

   Grind limit: 28.8 mm (1.13 in)

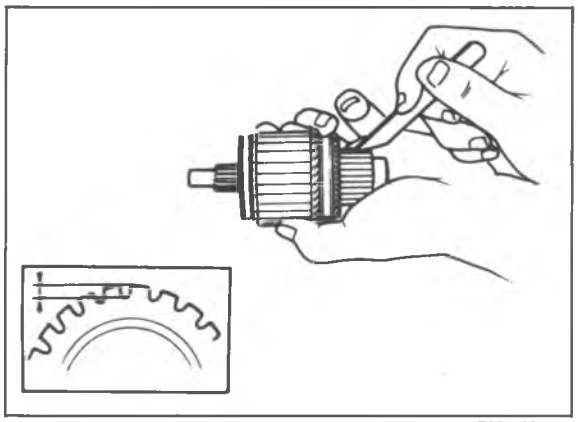

7BU05X-041

6. Segments groove depth
   If the depth of the groove is less than standard, undercut the grooves to the standard depth.

   Standard depth: 0.5—0.8 mm (0.02—0.03 in)
   Minimum depth: 0.2 mm (0.008 in).

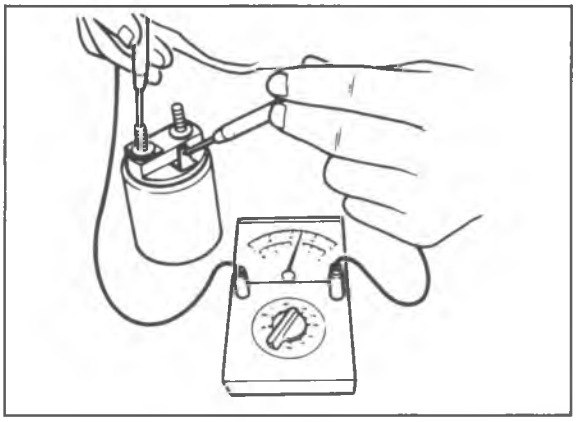

67U05X-053

Magnetic Switch

1. Wiring damage (Ⓢ terminal — Ⓜ terminal).
   Check for continuity between the Ⓢ terminal and the Ⓜ terminal using a circuit tester. Replace the magnetic switch if there is no continuity.

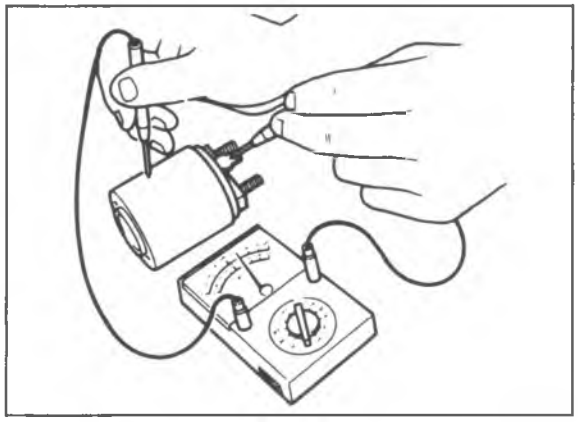

67U05X-054

2. Wiring damage (Ⓢ terminal — body)
   Check for continuity between Ⓢ terminal and body using a circuit tester.
   Replace the magnetic switch if there is no continuity.

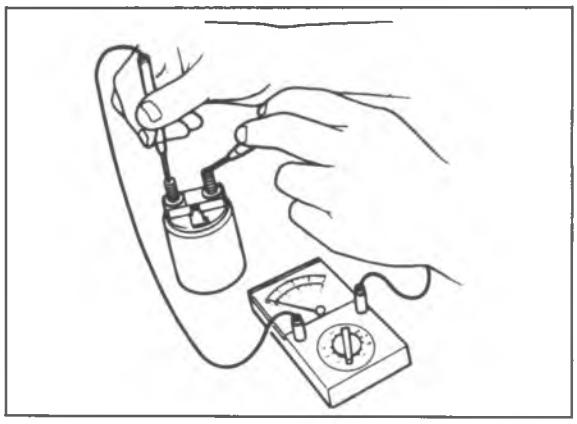

67U05X-055

3. Ground of magnetic switch
   Check for continuity between Ⓜ and Ⓑ terminals using a circuit tester. Replace the magnetic switch if there is continuity.

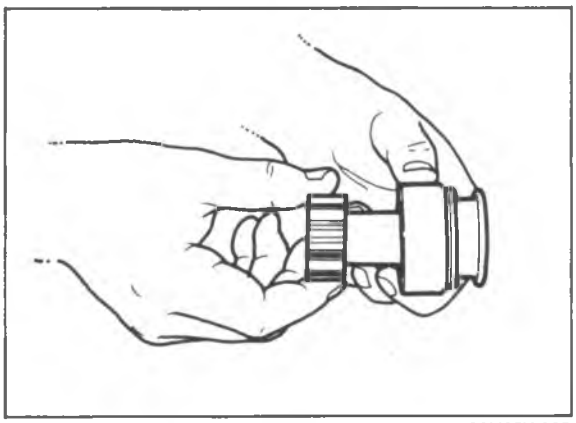

86U05X-035

Overrunning Clutch
Turn the pinion shaft by hand and hold the overrunning clutch.
Replace the overrunning clutch if the pinion turns in both directions or in neither direction.

Note
Do not wash the overrunning clutch with solvent; it is packed with grease and sealed.

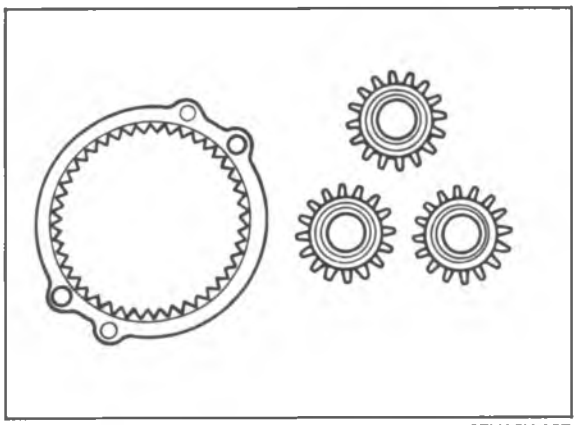

67U05X-057

Internal Gear and Planetary Gears
1. Internal gear
   Check for wear or damage. Replace if necessary.
2. Planetary gears
   Check for wear or damage. Replace if necessary.

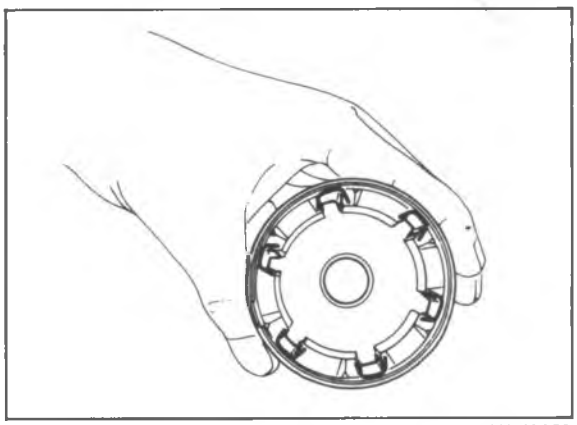

67U05X-058

Yoke
Check for damage. Replace if necessary.

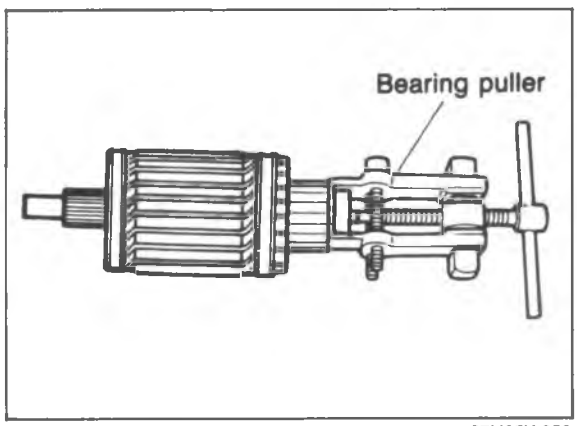

67U05X-059

Bearing
Check for abnormal noise, looseness, binding.
Replace the bearing if there is any problem.

Note
Use a bearing puller to remove the bearings.

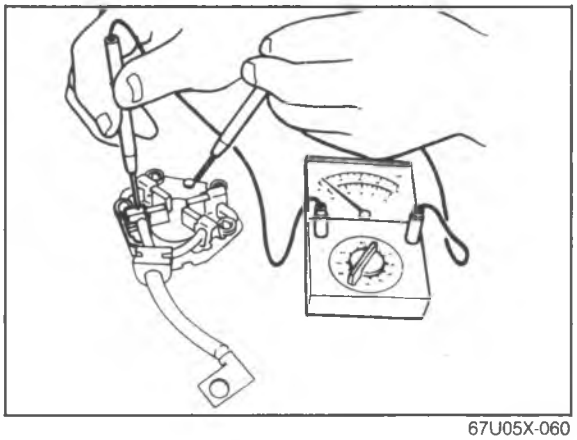

67U05X-060

Brush and Brush Holder

1. Insulation of brush holder
   Check for continuity between the insulated brush and the plate using a circuit tester. Replace the brush holder if there is continuity.

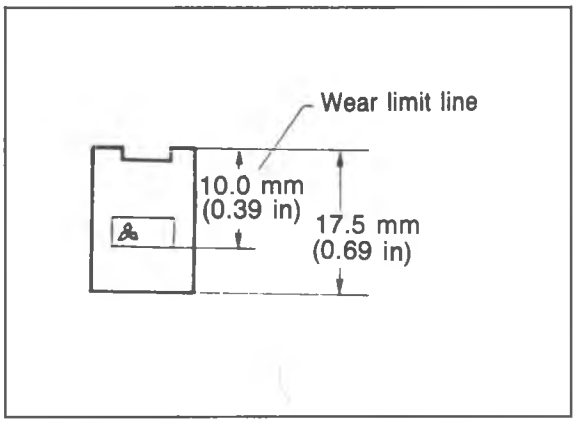

7BU05X-043

2. Brush
   Replace the brushes if they are worn beyond the wear limit, or if the wear is near the limit.

   Wear limit: 10.0 mm (0.394 in)
   New brush: 17.5 mm (0.689 in)

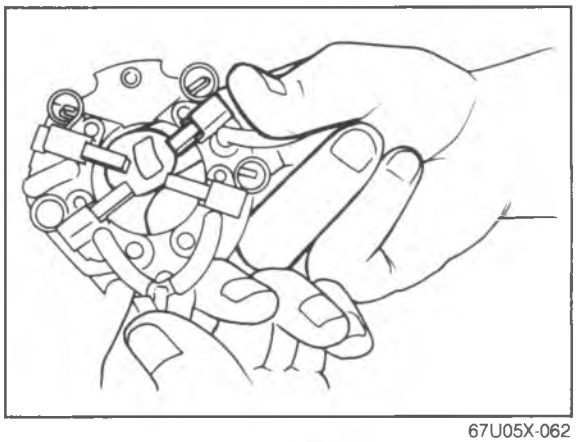

67U05X-062

3. Brush holder
   Check that the brush slides smoothly inside the brush holder.

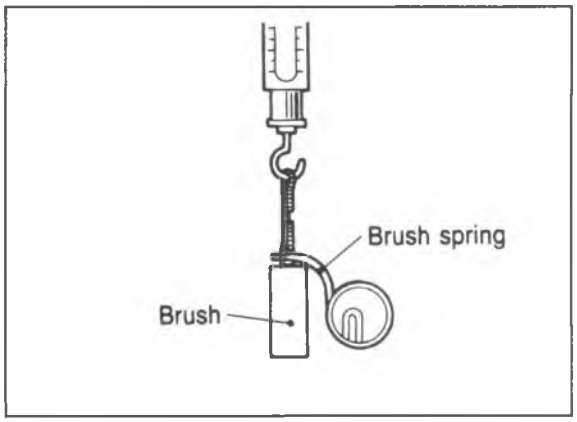

86U05X-036

4. Brush spring
   (1) Measure the force of the brush spring using a spring balance.
   (2) Replace the brush spring if the force is below specification.

   Specification: 7 N (0.7 kg, 1.5 lb)

   Note
   a) The force is measured at the moment the brush spring separates from the brush.
   b) The force must be 18—24 N (1.8—2.4 kg, 4.0—5.3 lb) for a new brush spring.

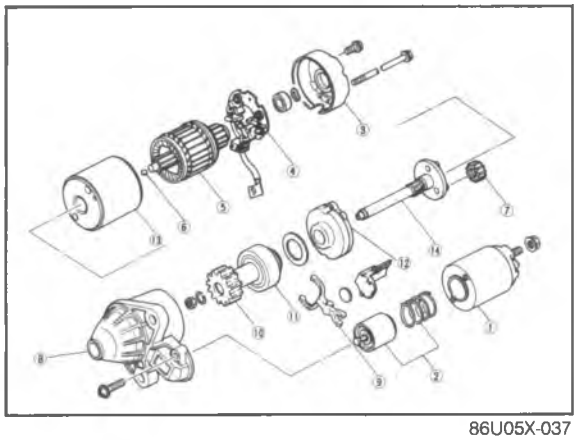

86U05X-037

ASSEMBLY

Assemble in the reverse order of disassembly, referring to the assembly note.

Assembly Note

Lubricate

During assembly lubricate the following points:

1. Gear of armature shaft
2. Internal gear and planetary gears
3. Plunger circumference
4. Lever
5. Ball
6. Gear shaft spline
7. Front bracket housing

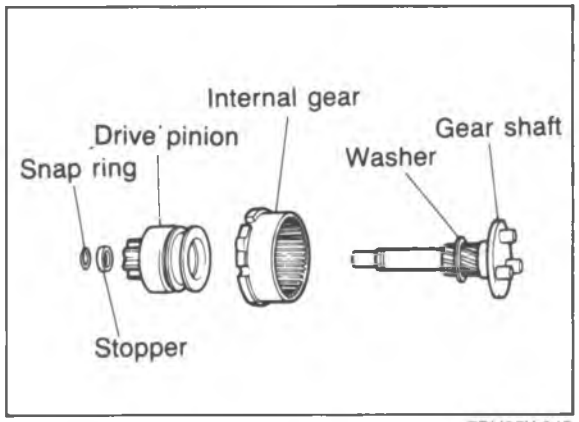

7BU05X-045

Installation of Overrunning Clutch

1. Install the washer, internal gear, drive pinion stopper, and the snap ring on the gear shaft.

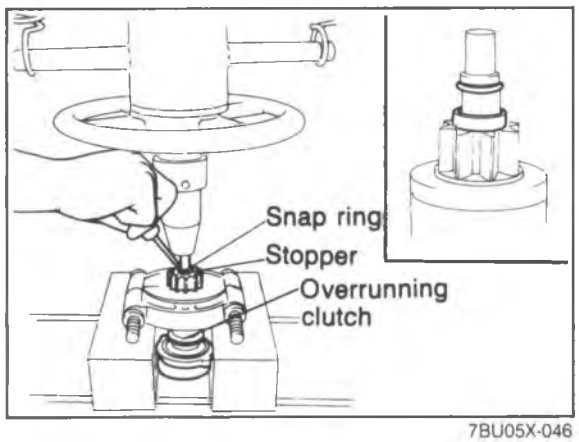

7BU05X-046

2. Press the stopper and the snap ring into position as shown in the figure.

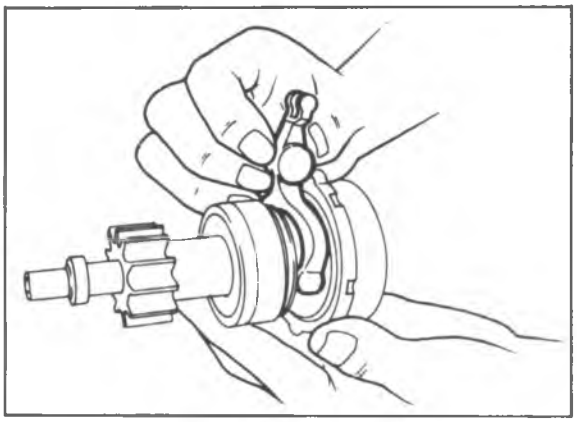

7BU05X-047

Installation of lever

Check the lever faces in the correct direction.

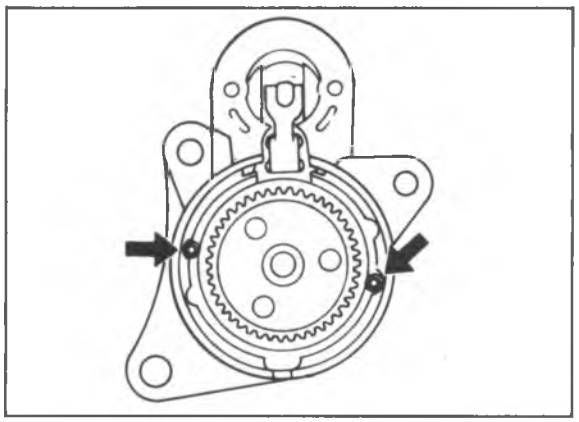

7BU05X-048

Installation of Brush Holder
Install the brush holder assembly and rear cover and align the through bolts.

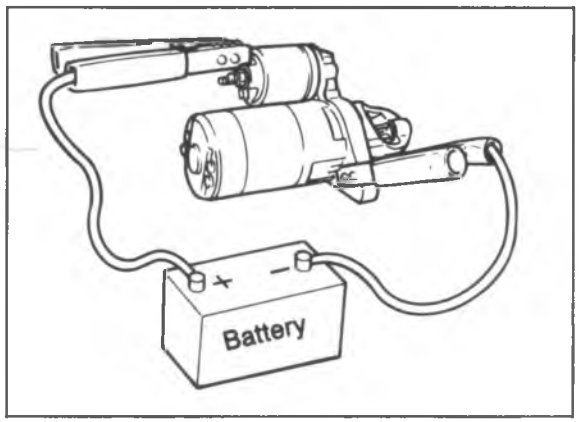

86U05X-038

CHECKING OPERATION

Magnetic Switch
Make the following tests:

Pull-out test

1. Check that the pinion is pulled out when 12V is connected to the S terminal and the body is grounded.

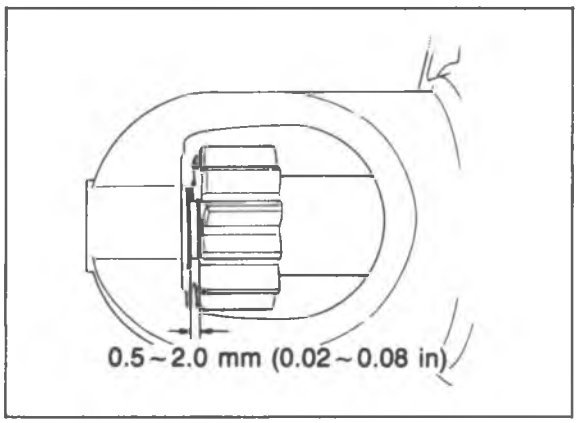

7BU05X-050

2. Measure the pinion gap while the pinion is pulled out.

   Specification: 0.5—2.0 mm (0.02—0.08 in)

3. Adjust the pinion gap with an adjust washer (drive housing front cover—magnetic switch) if it is not within specification.

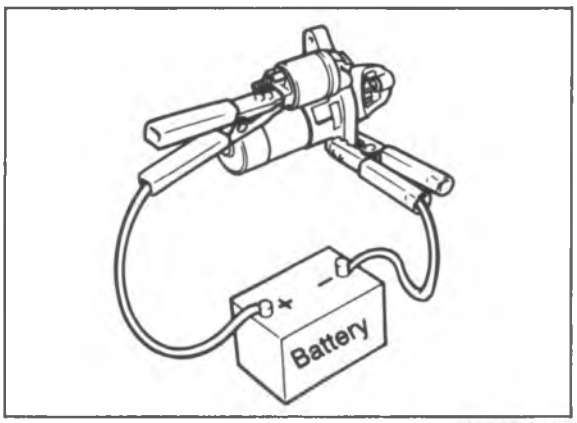

86U05X-039

Return test

1. Disconnect the motor wire from the M terminal, and then connect the battery power to the M terminal and ground the body.
2. Pull out the overrunning clutch with a flat-tip screwdriver. Check that the overrunning clutch returns to its original position when released.

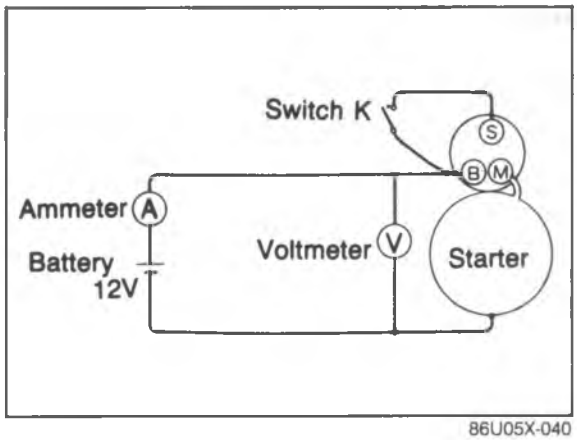

86U05X-040

No-Load Test

1. After adjusting the pinion gap, form a test circuit with a voltmeter and an ammeter.

   Note
   Use heavy gauge wires and tighten each terminal fully.

2. Close switch K to run the starter.
3. Check for the following:

Voltage	(V)	11.0
Current	(A)	90 max.
Gear shaft speed	(rpm)	3,000 min.

4. If any abnormality is noted, check for the cause according to "Inspection".

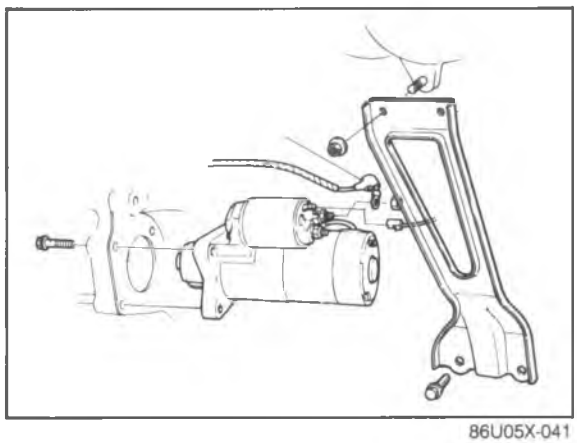
86U05X-041

INSTALLATION

Install in the reverse order of removal.

Note
When installing the starter, tighten the bolts to the specified torque.

Tightening torque:
Bolts..... 37—52 N·m
(3.8—5.3 m-kg, 27—38 ft-lb)
B terminal.....9.8—11.8 N·m
(1.0—1.2 m-kg, 87—104 in-lb)

Intake manifold bracket bolt.....
37—52 N·m (3.8—5.3 m-kg, 27—38 ft-lb)
Nut.....
19—25 N·m (1.9—2.6 m-kg, 14—19 ft-lb)

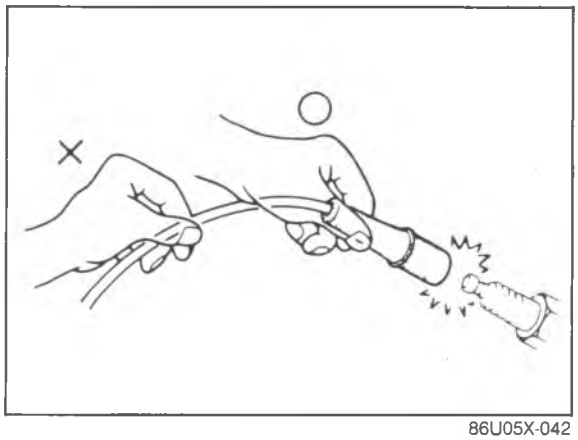

86U05X-042

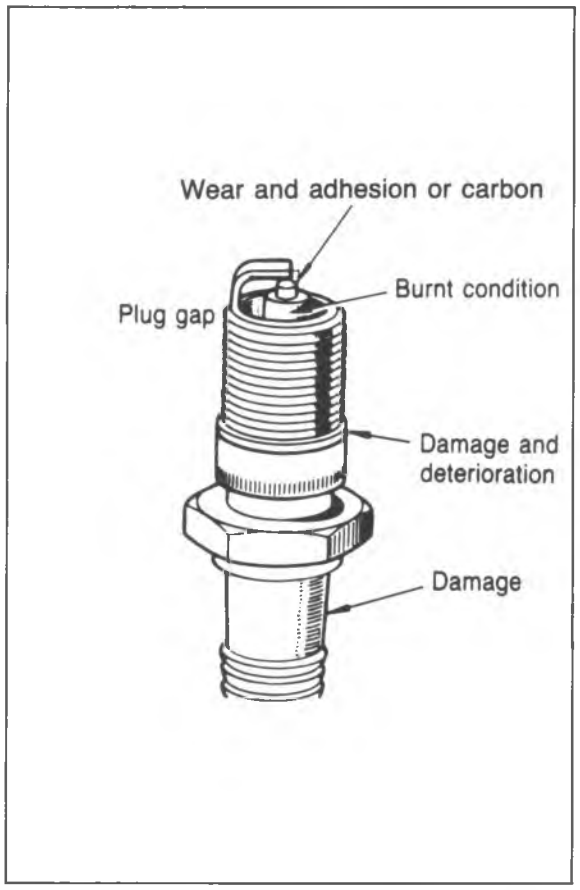

86U05X-043

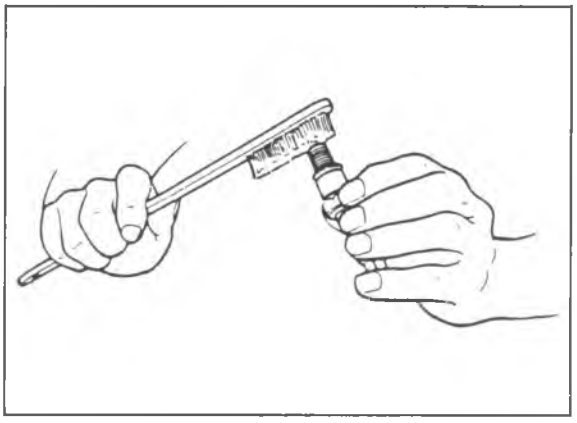

SPARK PLUGS

REMOVAL AND INSTALLATION

Note the following points:

1. When the spark plug lead, is to be pulled off, be sure to pull the boot itself, not the wire.
2. Tighten the spark plugs to the specified torque.

Tightening torque:
15—23 N·m
(1.5—2.3 m-kg, 10.8—16.6 ft-lb)

INSPECTION

Check the following points. If a problem is found, replace the spark plug.

1. Damaged insulation
2. Worn electrodes
3. Carbon deposits
   If cleaning is necessary, use a plug cleaner or a wire brush. Clean the upper insulator also.
4. Damaged gasket.

Plug gap: 1.0—1.1 mm (0.039—0.043 in)

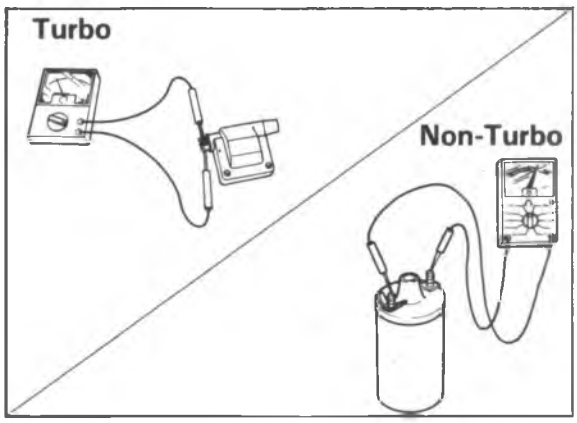

86U05X-044

IGNITION COIL

INSPECTION

Primary Coil

Use an ohmmeter and check for resistance in the primary coil. If it is not within the specification, replace the coil.

Primary coil resistance: (at 20°C 68°F)
Turbo.....0.72—0.88 Ω
Non-Turbo...1.04—1.27 Ω

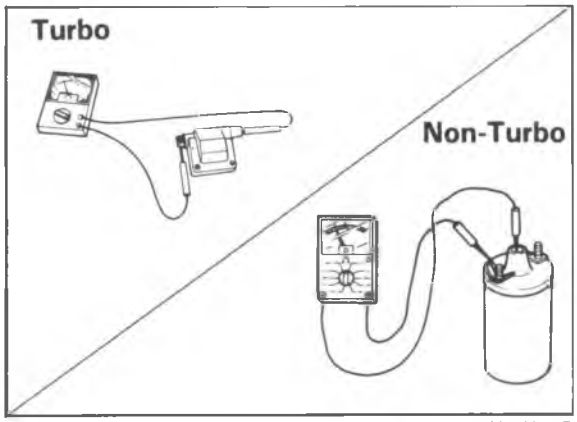

86U05X-045

Secondary Coil

Use a ohmmeter to measure the resistance of the secondary coil. If it is not within specification, replace the coil.

Secondary coil resistance: (at 20°C 68°F)
Turbo.....10.3—13.9 kΩ
Non-Turbo... 7.1— 9.7 kΩ

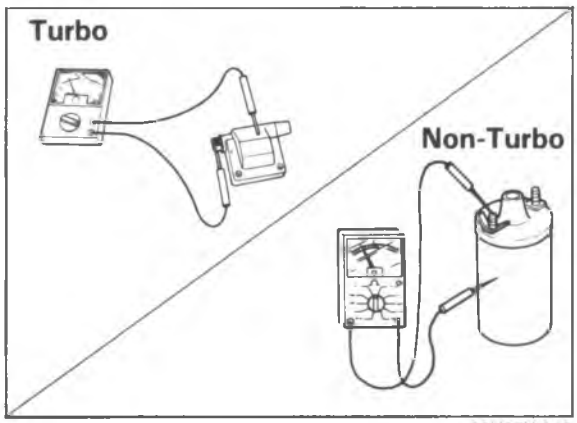

86U05X-046

Insulation of Case

Use a **500V megger** tester to measure the insulation resistance between the primary terminal and the case.
The standard reading is **10 MΩ or more.**

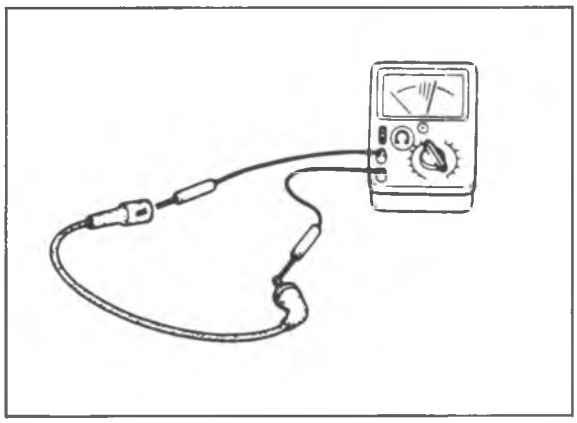
86U05X-047

HIGH-TENSION LEAD

INSPECTION

Measure the resistance using an ohmmeter.

Resistance: 16 kΩ per 1m (3.28 ft)

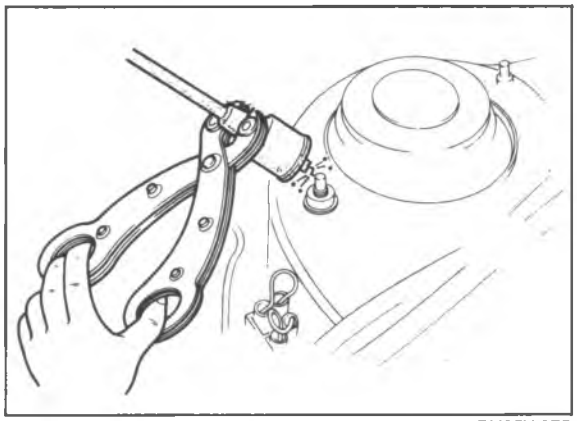

7BU05X-075

DISTRIBUTOR

SPARK TEST

1. Disconnect the distributor lead from the distributor.
2. Hold it with insulated pliers approx. 5—10 mm (0.20—0.39 in) from a ground.
3. Crank the engine and check that a strong blue spark is visible.
4. If there is no spark, the ignition coil or pick-up coil may be bad.
   Check once again after replacing the ignition coil or pick-up coil.

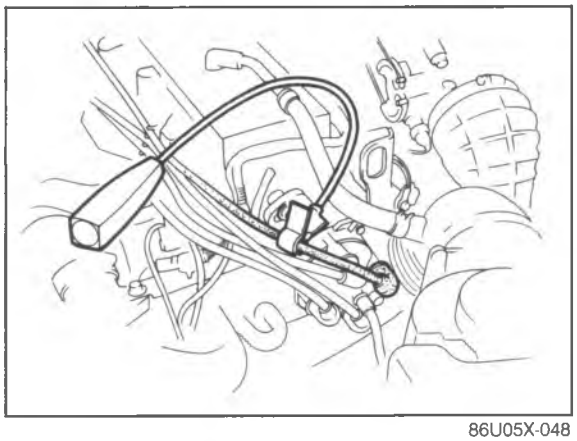

86U05X-048

IGNITION TIMING

1. Warm up the engine to the normal operating temperature.
2. Turn all electric loads OFF.
3. Connect a tachometer and timing light to the engine.

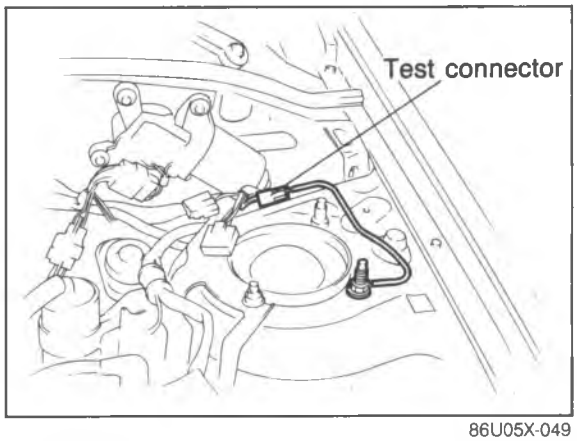

86U05X-049

4. Connect a jumper wire between the test connector and ground.
5. Check the idle speed. Set to the specified speed if necessary. (Refer to section 4A or 4B.)

   Idle speed: 750 ± 25 rpm

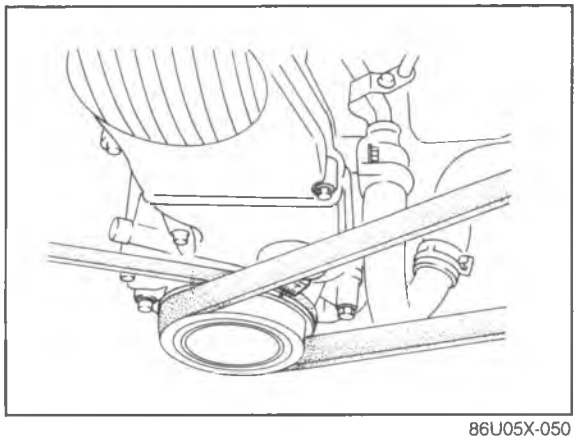

86U05X-050

6. Check that the timing mark (Yellow) on the crankshaft pulley and the mark on the timing belt cover are aligned.

   Ignition timing:
   Turbo: 9 ± 1°
   (Test connector grounded)
   Non-Turbo: 6 ± 1°
   (Vacuum hoses disconnected and plugged)

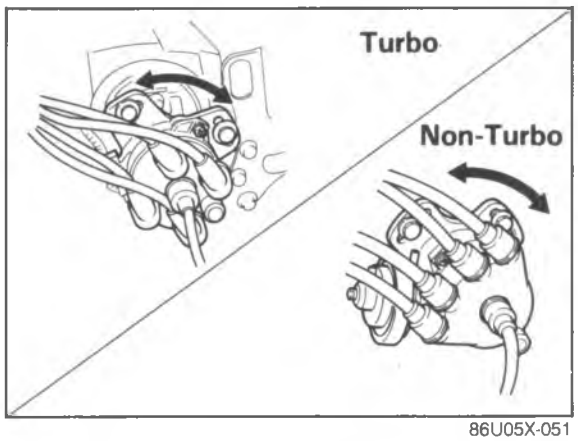

86U05X-051

8. If the mark is not aligned, loosen the distributor lock bolt, and turn the distributor housing to make the adjustment.
9. Reconnect the vacuum hoses, or disconnect the jumper wire from the test connector.
10. Tighten the distributor lock bolt to specified torque.

Tightening torque:
18.6—25.5 N·m
(1.9—2.6 m-kg, 13.7—18.8 ft-lb)

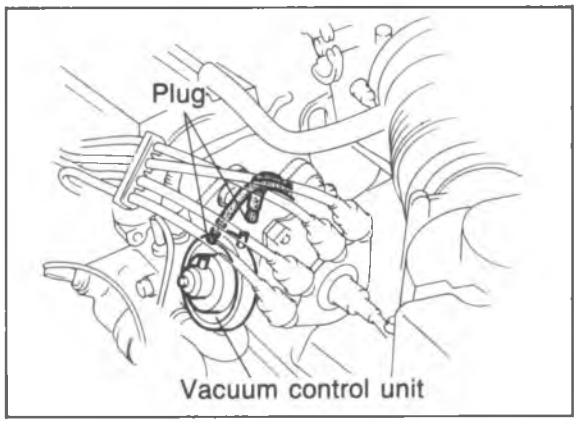

86U05X-052

SPARK CONTROL (Non-Turbo)
Centrifugal Advance

1. Warm up the engine to the normal operating temperature.
2. Check that the idle speed and initial ignition timing are correct.
3. Disconnect the vacuum hoses from the vacuum control unit and plug them.

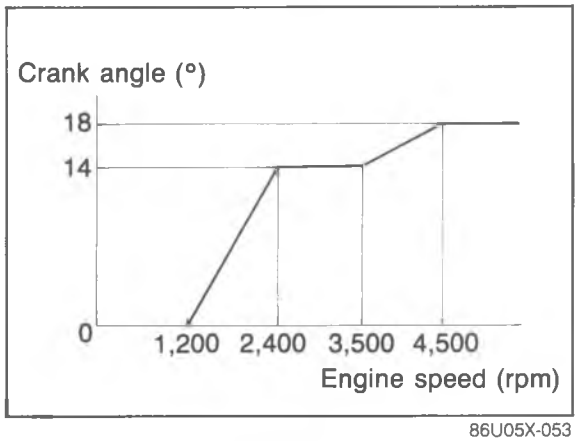

86U05X-053

4. While gradually increasing the engine speed, use a timing light to check the advance on the pulley.
   Excess advance..... weak governor spring
   (If the governor spring is broken, the advance will rise very high)
   Insufficient advance...governor weight or cam malfunction

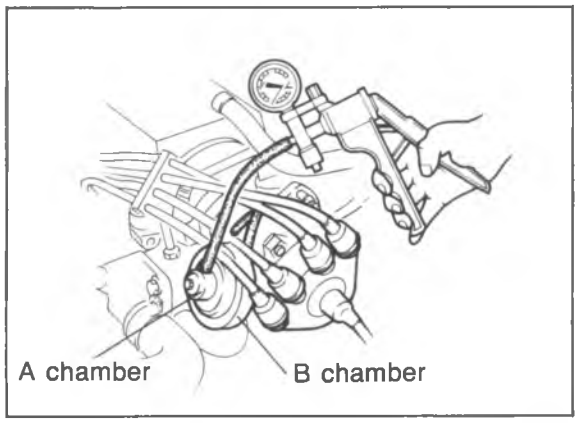

86U05X-054

Vacuum Advance

1. Warm up the engine to the normal operating temperature.
2. Check that the idle speed and ignition timing are correct.
3. Disconnect the vacuum hoses from the vacuum control unit, and plug them.
4. Connect a vacuum pump to the vacuum control unit.

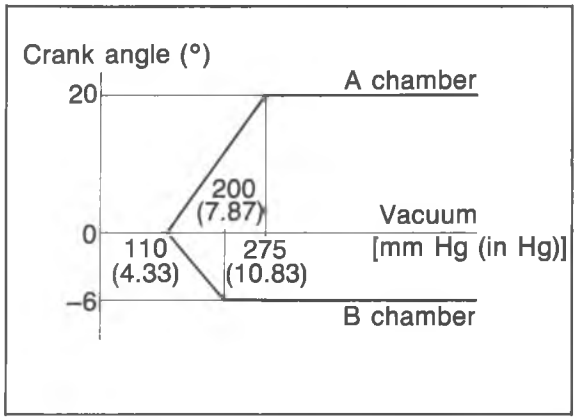

86U05X-055

5. Apply vacuum and check the advance with the timing light.

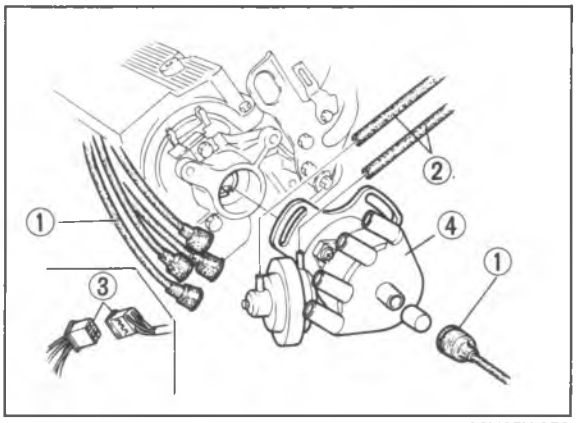

86U05X-056

REMOVAL

1. Remove the high-tension leads.
2. Disconnect the vacuum hoses and wiring. (Non-Turbo)
3. Disconnect the coupler. (Turbo)
4. Loosen the distributor lock bolts.
5. Remove the distributor.

Note
Do not turn the crankshaft after the distributor has been removed.

DISASSEMBLY

Disassemble in the order shown in the figure.

Turbo Engine

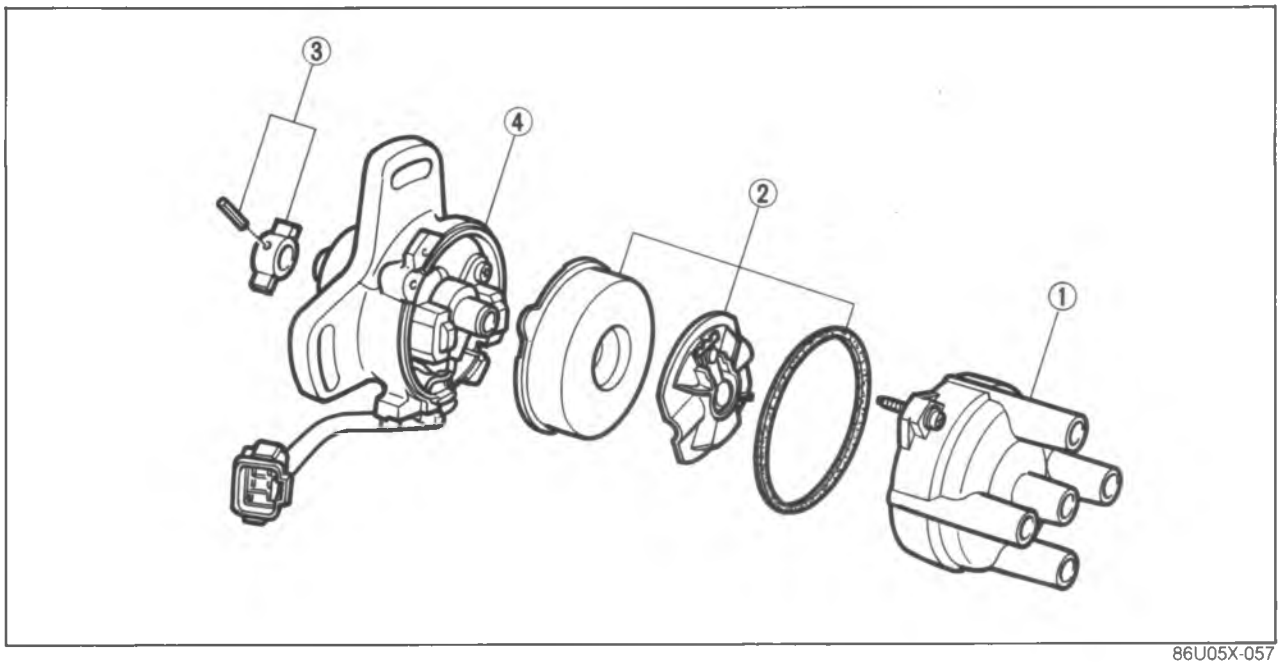

86U05X-057

1. Cap
2. Distributor rotor
3. Coupling set
4. Distributor set

Caution
Do not disassemble the distributor set.

Non-Turbo Engine

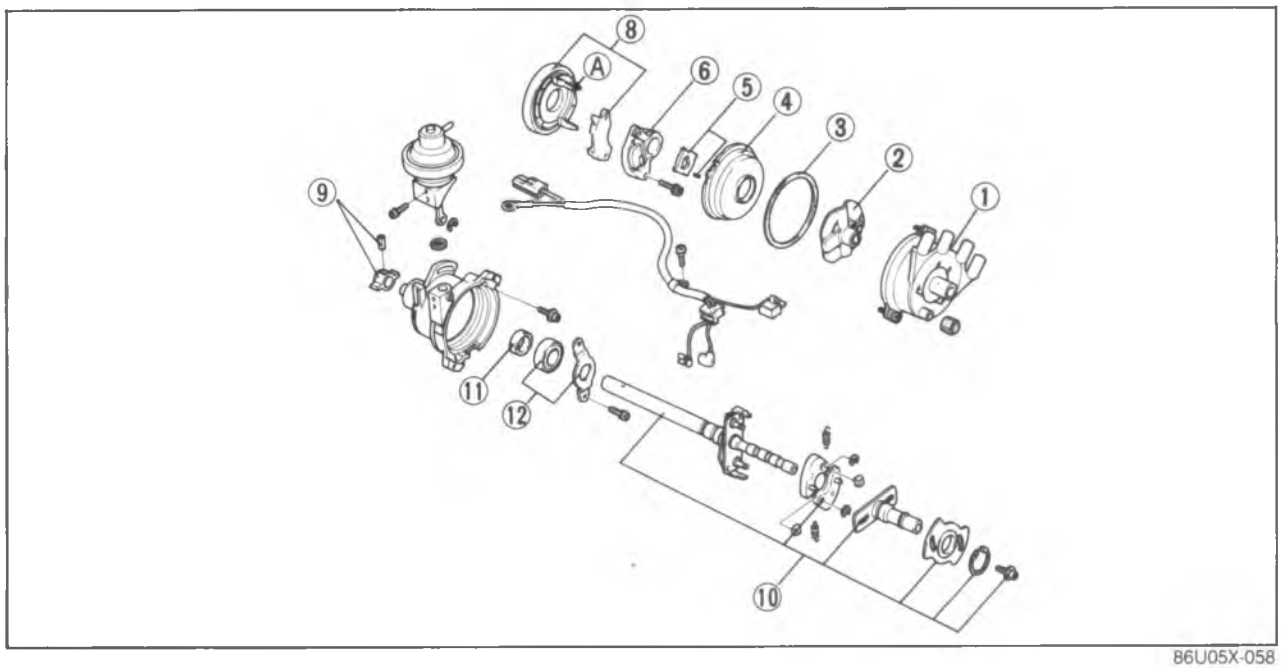

86U05X-058

1. Cap
2. Rotor
3. Gasket
4. Cover
5. Signal rotor and pin
6. Pick-up coil with igniter
7. Vacuum control unit
8. Breaker
9. Coupling set
10. Governor set
11. Oil seal
12. Bearing

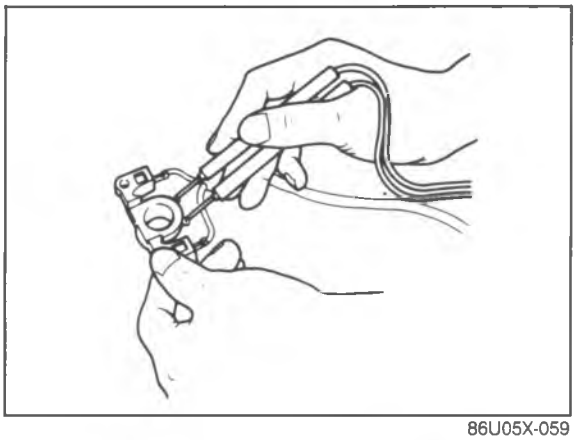

86U05X-059

INSPECTION

Pick-up Coil with Igniter (Non-Turbo)

1. Connect an ohmmeter to the pick-up coil.
2. Measure the resistance.

   Resistance: 900—1,200 Ω

3. If it is not within specification, replace it.

Pick-up Coil (Turbo)

Refer to page 4B—88.

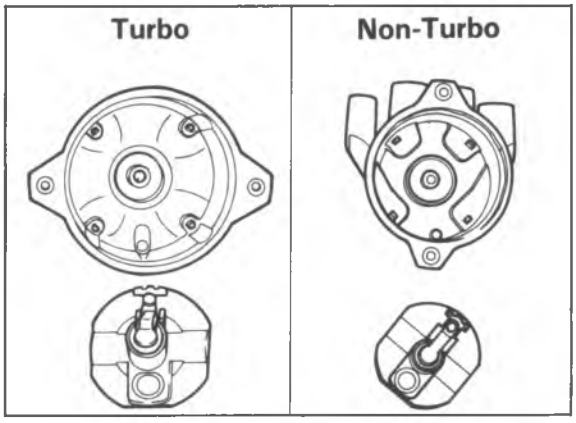

86U05X-060

Cap and Rotor

1. Check for corrosion, damage, and cracks.
2. Replace if necessary.

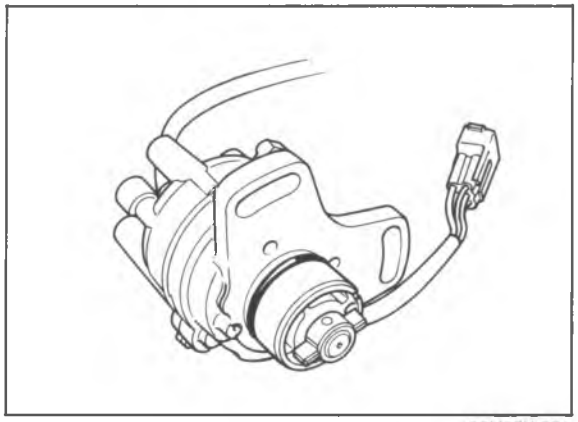

86U05X-061

Distributor Shaft, O-Ring, and Oil Seal

1. Check for damage to the distributor shaft, O-ring, and oil seal.

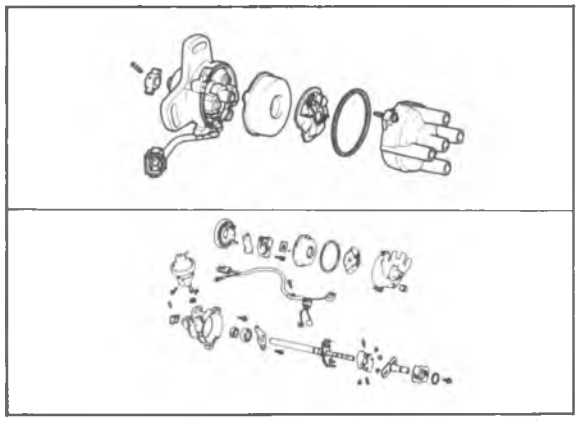

86U05X-062

ASSEMBLY

Assemble in the reverse order of disassembly, referring to the assembly note.

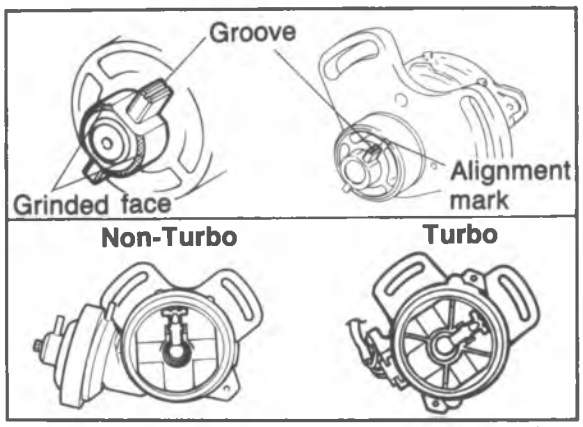

86U05X-084

Assembly Note

Align the coupling set blade with the alignment mark and check that the rotor is aligned as shown in the illustration.

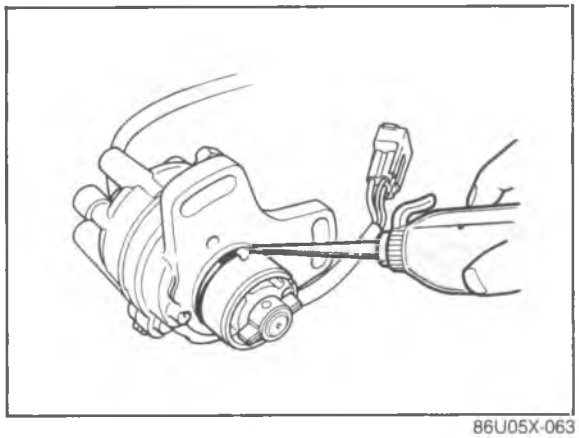

86U05X-063

INSTALLATION

Note
After installing the distributor, adjust the ignition timing (Refer to 5—34).

1. Apply engine oil to the O-ring and driven gear.

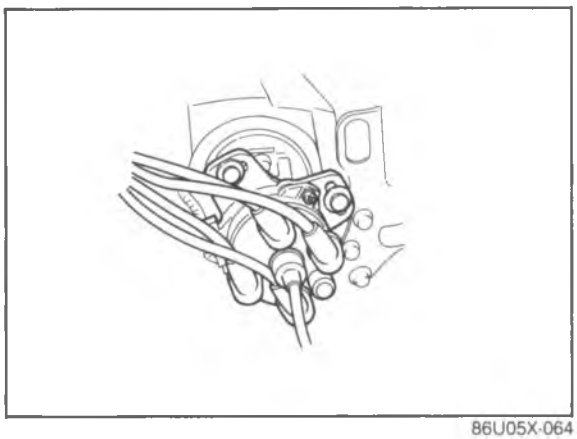

86U05X-064

2. Install the distributor and connect the high-tension leads and distributor connector.
3. Tighten lock bolt to the specified torque.

Torque specification:
19—25 N·m (1.9—2.6 m-kg, 14—18 ft-lb)

H.E.I. TROUBLESHOOTING (Non-Turbo)

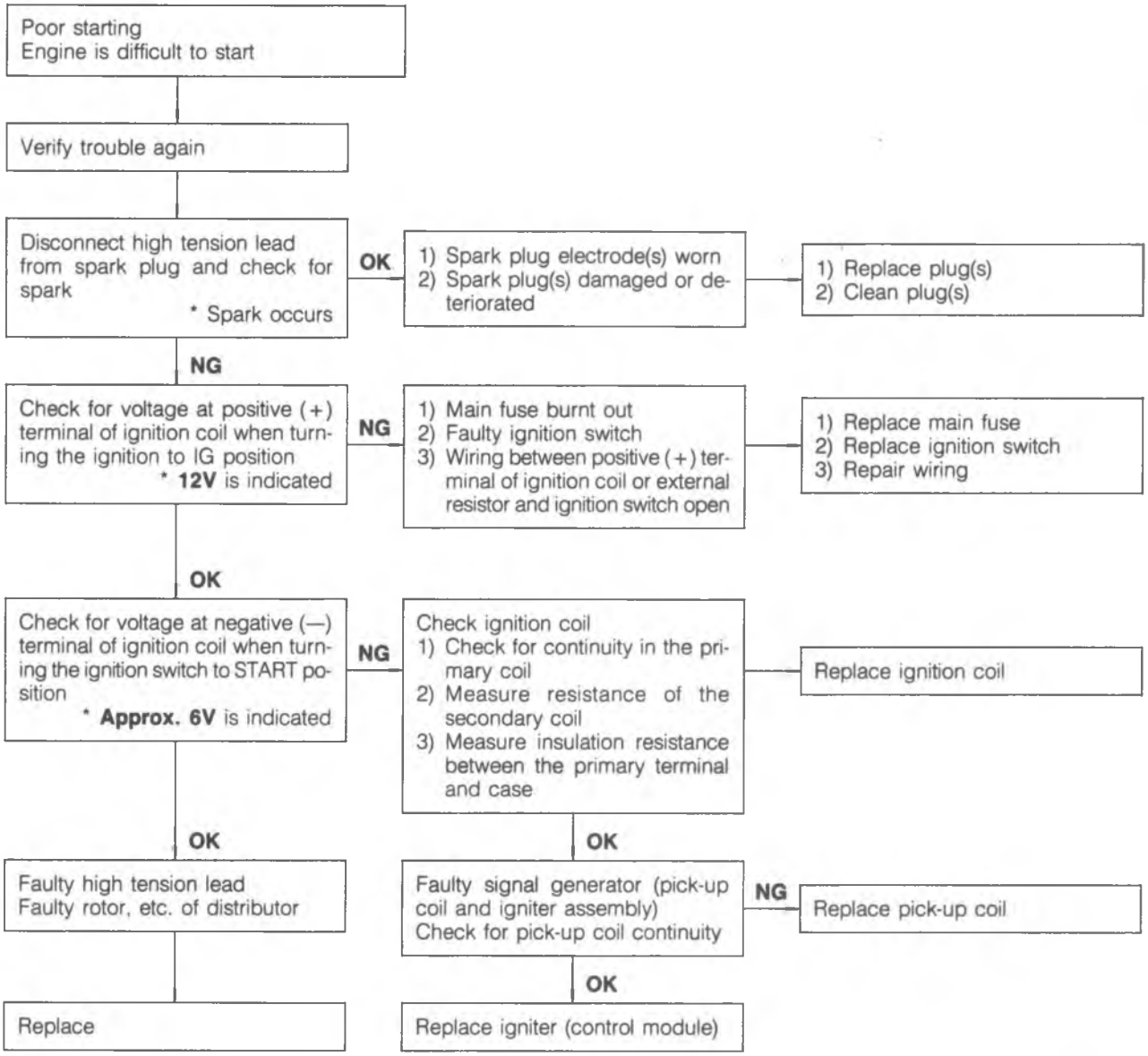

86U05X-065

IGNITER (Turbo)

INSPECTION

Warning
While checking the igniter, disconnect the connector from the ignition coil.

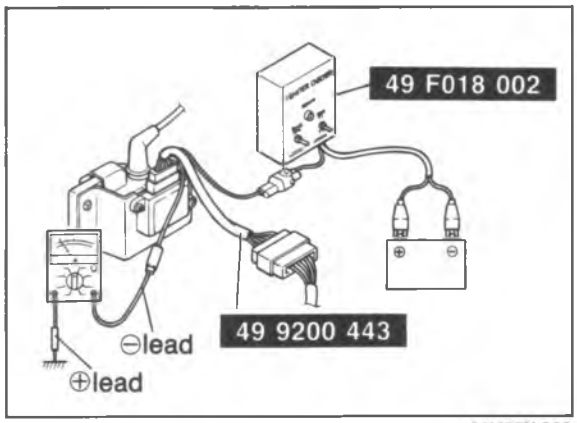

86U05X-066

1. Disconnect the igniter connector.
2. Connect the **SST** between the igniter and igniter connector.

Caution
Do not misconnect the ohmmeter leads.
Connect as follows:
+ lead to ground
- lead to SST

3. Connect an ohmmeter between the **SST** and ground and set the scale change dial to X1.
4. Connect the **SST** to the battery.

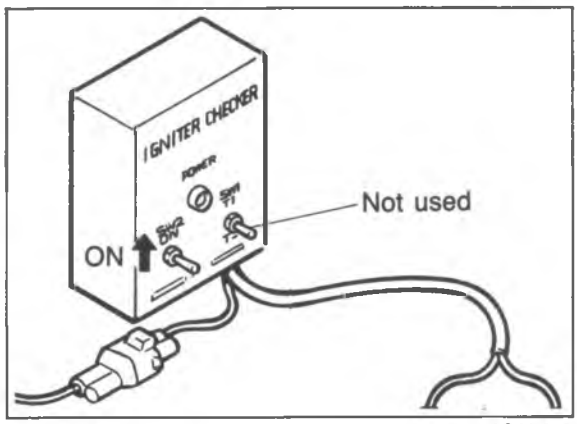

79G05-010

5. Turn the ignition switch ON.
6. Push up the "SW2" switch on the **SST** while observing the ohmmeter.

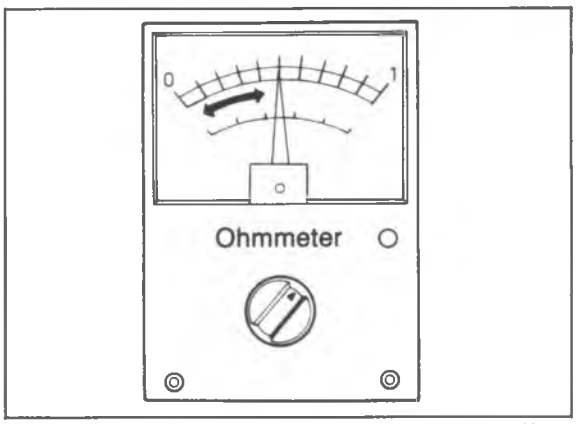

86U05X-067

7. The pointer needle on the ohmmeter should jump up the the approx. 1/2 scale and then return.
8. Replace the igniter, if necessary.

STARTER INTER-LOCK SYSTEM (ONLY M/T)

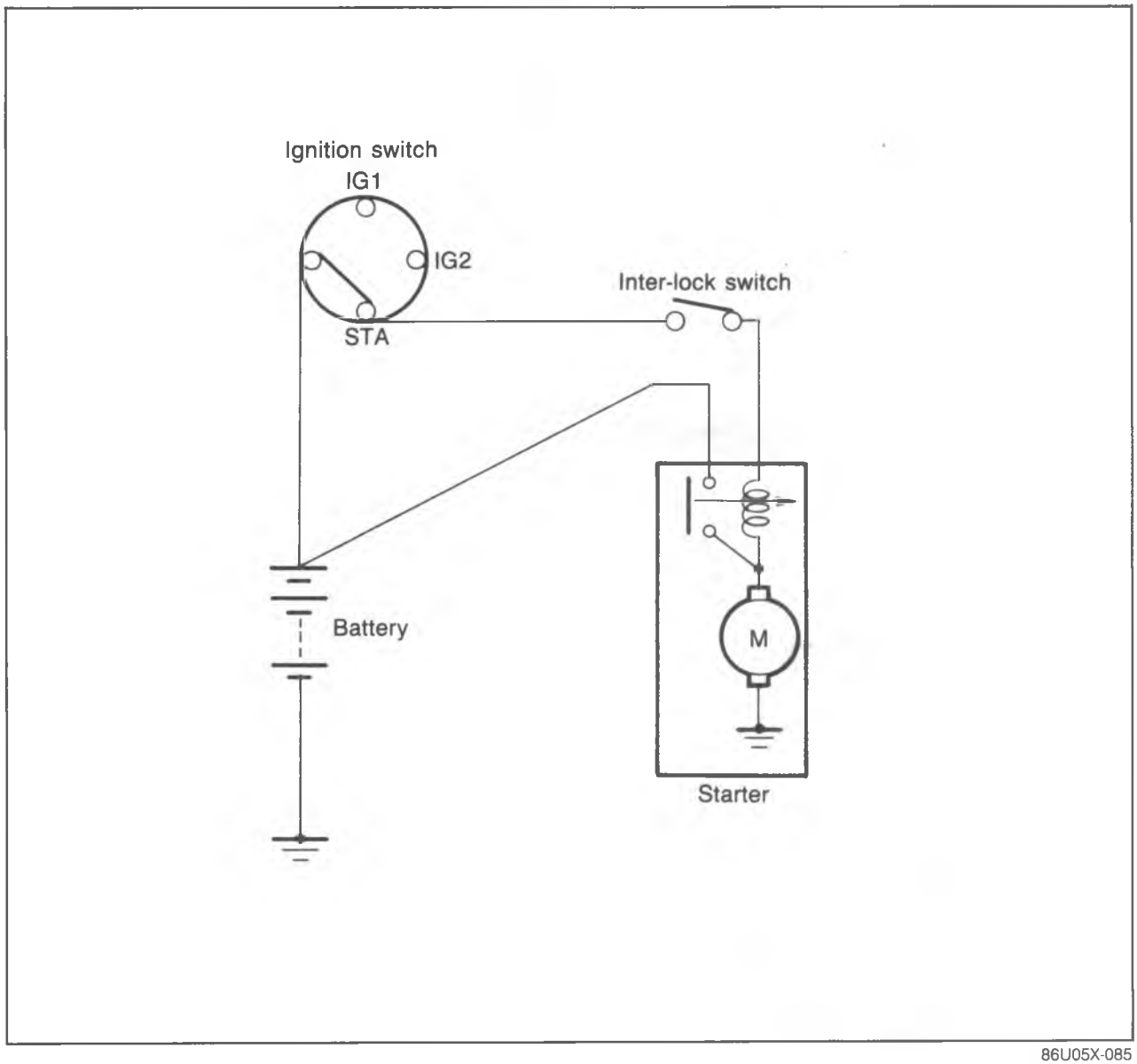

86U05X-085

This system is similar to that of the inhibitor switch on an A/T vehicle.
If the clutch pedal is not depressed during starting, battery power will not be supplied to the starter and it will not operate.

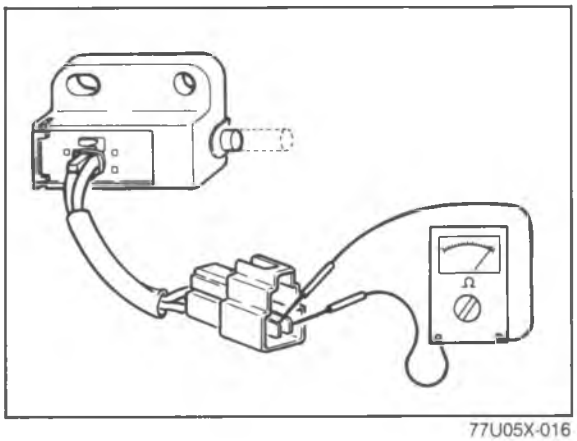

77U05X-016

INTERLOCK SWITCH

Inspection

1. Disconnect the interlock switch connector.
2. Connect a circuit tester to the switch.
3. Check the continuity.

Pedal	Continuity
Depressed	Yes
Released	No

4. Replace the switch, if necessary.

CLUTCH

OUTLINE ..... 6— 2
STRUCTURAL VIEW ..... 6— 2
SPECIFICATIONS ..... 6— 3
TROUBLESHOOTING GUIDE ..... 6— 3
ON-VEHICLE MAINTENANCE ..... 6— 4
FLUID LEVEL ..... 6— 4
PEDAL HEIGHT ..... 6— 4
PEDAL FREEPLAY ..... 6— 4
CLUTCH PEDAL ..... 6— 5
REMOVAL AND INSTALLATION ..... 6— 5
INSPECTION ..... 6— 5
CLUTCH MASTER CYLINDER ..... 6— 6
REMOVAL ..... 6— 6
DISASSEMBLY ..... 6— 7
INSPECTION ..... 6— 8
ASSEMBLY ..... 6— 8
INSTALLATION ..... 6— 9
CLUTCH RELEASE CYLINDER ..... 6— 9
REMOVAL ..... 6—10
DISASSEMBLY ..... 6—10
INSPECTION ..... 6—11
ASSEMBLY ..... 6—11
INSTALLATION ..... 6—12
AIR BLEEDING ..... 6—12
CLUTCH AND FLYWHEEL ..... 6—13
REMOVAL ..... 6—13
INSPECTION ..... 6—14
INSTALLATION ..... 6—17

86U06X-001

OUTLINE

STRUCTURAL VIEW

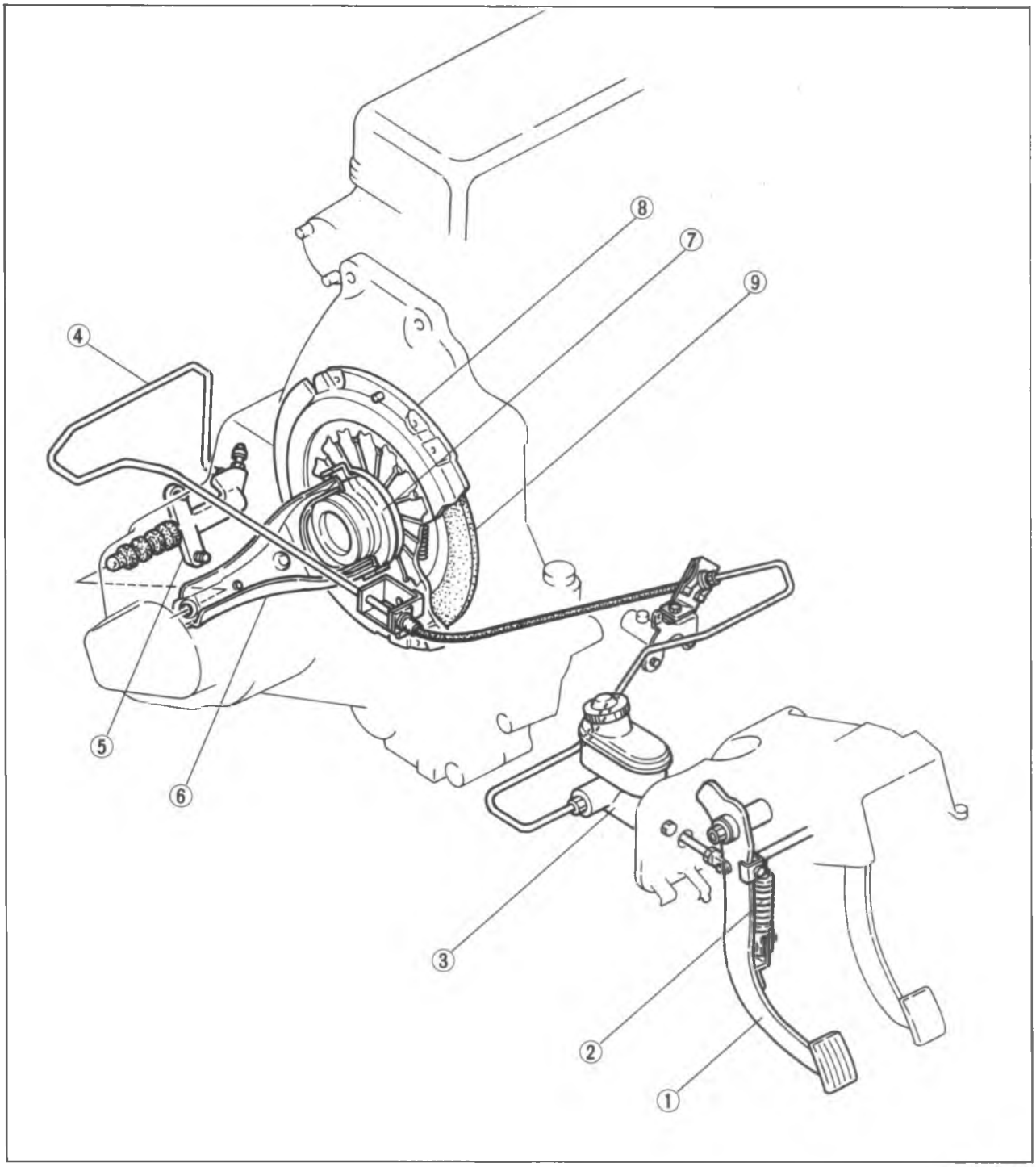

86U06X-002

1. Clutch pedal
2. Assist spring
3. Clutch master cylinder
4. Clutch pipe
5. Clutch release cylinder
6. Clutch release fork
7. Clutch release bearing
8. Clutch cover
9. Clutch disc

SPECIFICATIONS

Item / Engine				Non-Turbo	Turbo
Clutch control type				Hydraulic	
Clutch cover	Type			Diaphragm spring	
Clutch disc	Set load		N (kg, lb)	4316 (440, 968)	5494 (560, 1232)
	Outer diameter		mm (in)	225 (8.858)	240 (9.449)
	Inner diameter		mm (in)	150 (5.906)	160 (6.299)
	Thickness	Pressure plate side	mm (in)	4.1 (0.16)	3.5 (0.14)
		Flywheel side	mm (in)	3.5 (0.14)	
Clutch pedal	Type			Suspended	
	Pedal ratio			6.00 : 1	
	Full stroke		mm (in)	135 (5.31)	
	Height		mm (in)	216.5—221.5 (8.524—8.720)	
Master cylinder inner diameter			mm (in)	15.87 (0.625)	
Release cylinder inner diameter			mm (in)	19.05 (0.750)	
Clutch fluid type				SAE J1703 or FMVSS 116, DOT-3 or DOT-4	

86U06X-003

TROUBLESHOOTING GUIDE

Problem	Possible Cause	Remedy	Page
Slipping	Clutch disc facing worn excessively	Replace	6—15
	Clutch disc facing surface hardened or oil on surface	Repair or replace	6—15
	Pressure plate deformed	Repair or replace	6—14
	Diaphragm spring damaged or weakened	Replace	6—14
	Insufficient clutch pedal play	Adjust	6— 4
	Clutch pedal does not function smoothly	Repair or replace	6— 4, 5
	Flywheel deformed	Repair or replace	6—16
Faulty disengagement	Excessive runout or deformity of clutch disc	Replace	6—15
	Clutch disc splines rusted or worn	Remove rust or replace	6—15
	Oil on clutch cover facing surface	Repair or replace	6—14
	Diaphragm spring weakened	Replace	6—14
	Excessive clutch pedal play	Adjust	6— 4, 5
	Insufficient clutch fluid	Add fluid	6— 4
	Leakage of clutch fluid	Repair or replace	—
Clutch vibrates when starting	Oil on clutch disc facing surface	Repair or replace	6—15
	Torsion spring weakened	Replace	6—15
	Clutch disc facing surface hardened or deformed	Repair or replace	6—15
	Clutch disc facing rivets loose	Replace	6—15
	Pressure plate deformed	Replace	6—14
	Flywheel surface hardened or deformed	Repair or replace	6—16
	Loose or worn engine mount	Tighten or replace	—
Clutch pedal does not function smoothly	Pedal shaft not properly lubricated	Lubricate or replace	6— 5
Abnormal noise	Clutch release bearing damaged	Replace	6—15
	Poor lubrication of clutch release bearing sleeve	Lubricate or replace	6—15
	Torsion spring weakened	Replace	6—15
	Excessive crankshaft end play	Repair	Refer to Section 1
	Pilot bearing worn or damaged by heat	Replace	6—14
	Worn pivot points of release fork	Repair or replace	6—16

86U06X-004

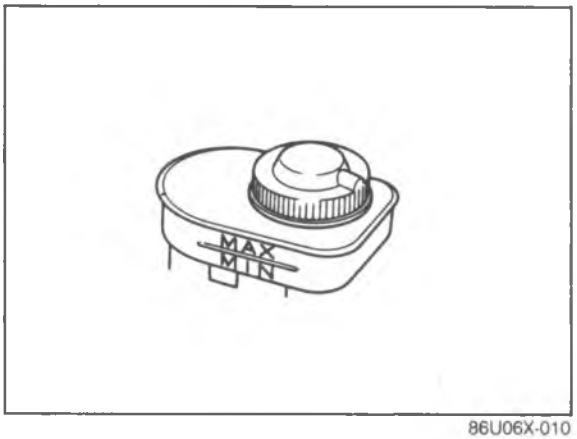

86U06X-010

ON-VEHICLE MAINTENANCE

FLUID LEVEL

1. Clean the area around the reservoir and the reservoir cap.
2. Check the fluid level. If the level is near or below the "MIN" mark, add brake fluid to the "MAX" mark.

Fluid specification:
DOT-3 or DOT-4
(FMVSS 116, or SAE J1703)

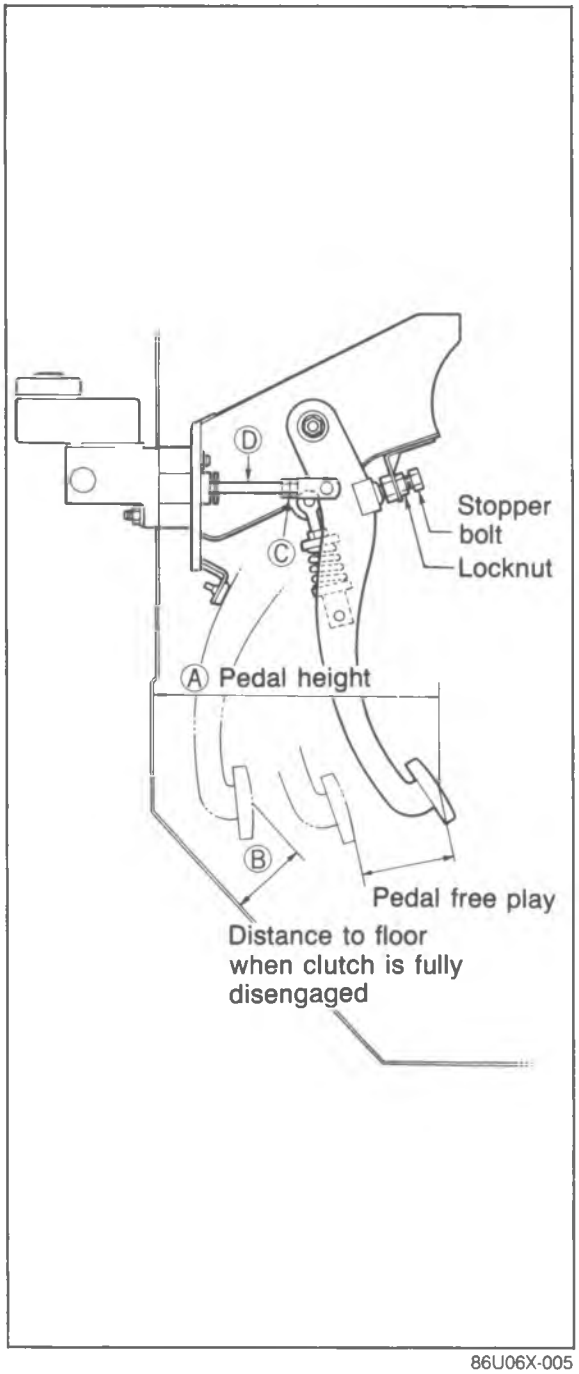

86U06X-005

PEDAL HEIGHT

Inspection

Measure the distance from the upper center of the pedal pad to the firewall and ensure that the distance is within specification.

Pedal height A:
216.5—221.5 mm (8.524—8.720 in)

Adjustment

To adjust the pedal height, loosen locknut and turn stopper bolt.

PEDAL FREEPLAY

Inspection

Depress the pedal lightly by hand and measure the freeplay to ensure that it is within specification.

Pedal freeplay: 5—13 mm (0.20—0.51 in)

Adjustment

1. Adjust the free play by loosening locknut C and turning push rod D.
2. Check that the distance from the floor to the center of the upper surface of the pedal pad is as specified or more when the clutch is fully disengaged.

Disengagement height B: 68 mm (2.7 in) or more

3. Tighten locknut C after adjustment.

CLUTCH PEDAL

REMOVAL AND INSTALLATION

Remove the clutch pedal in the sequence shown in the figure. Install in the reverse order of removal. Apply a coat of grease (lithium base, N.L.G.I. No. 2) to the pedal bushing.

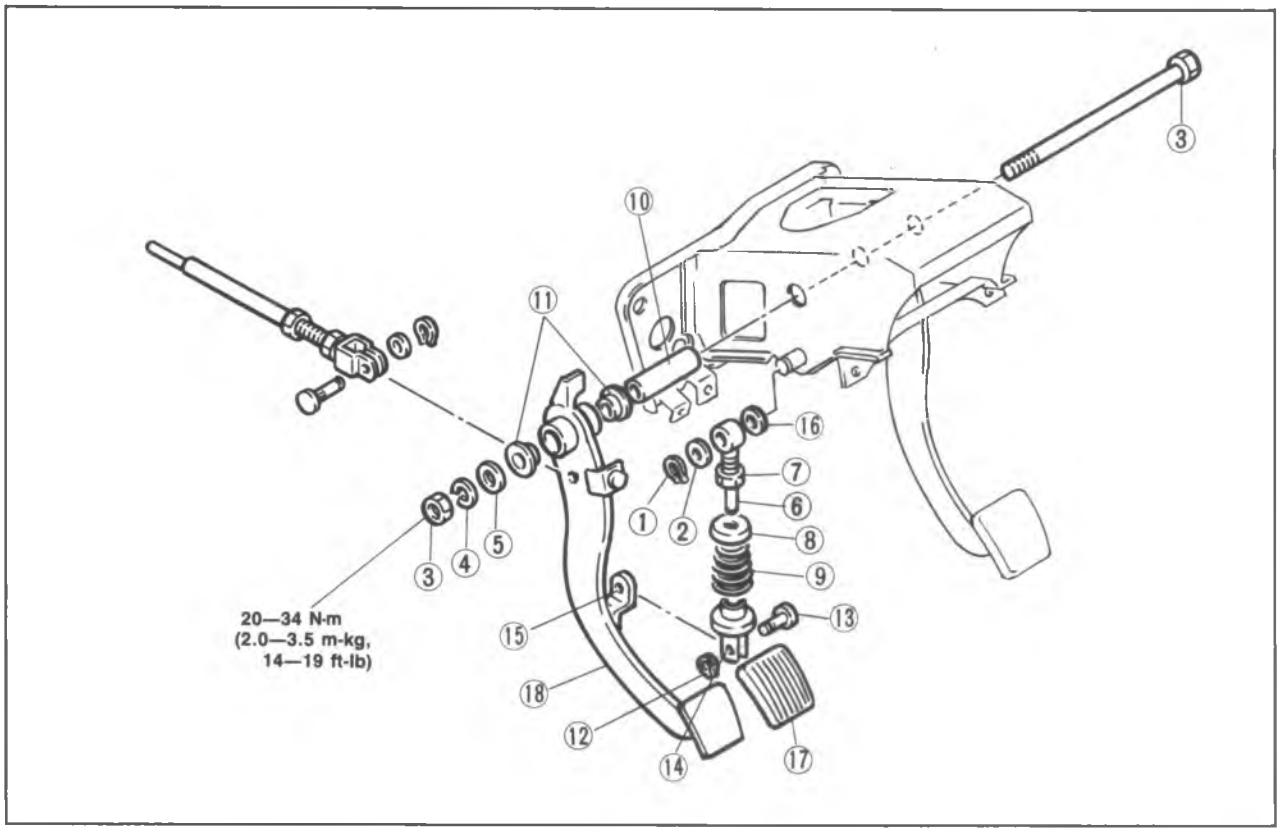

86U06X-006

1. Clip
2. Flat washer
3. Bolt and nut
4. Spring washer
5. Flat washer
6. Rod
7. Nut
8. Spring seat
9. Assist spring
10. Spacer
11. Bushings
12. Clip
13. Pin
14. Spring seat
15. Bushings
16. Flat washer
17. Pad
18. Clutch pedal

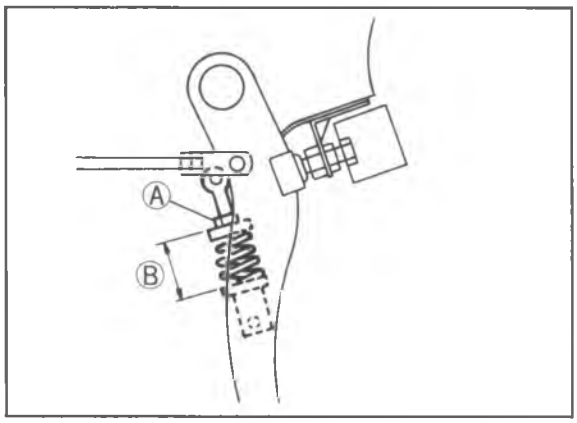

86U06X-007

INSPECTION

Check the following, and repair or replace any faulty parts.

1. Worn or damaged pedal bushing
2. Twisted or bent pedal
3. Worn or damaged pedal pad

After installation:

1. Adjust the pedal height.
2. Check the pedal free play, and adjust if necessary.
3. Adjust the installation length of the assist spring. The installation length is adjusted by turning nut A shown in the figure and adjusting dimension B.

Standard dimension:

Non-Turbo 38.6—39.6 (1.520—1.559 in)
Turbo 37.1—38.1 (1.461—1.450 in)

CLUTCH MASTER CYLINDER

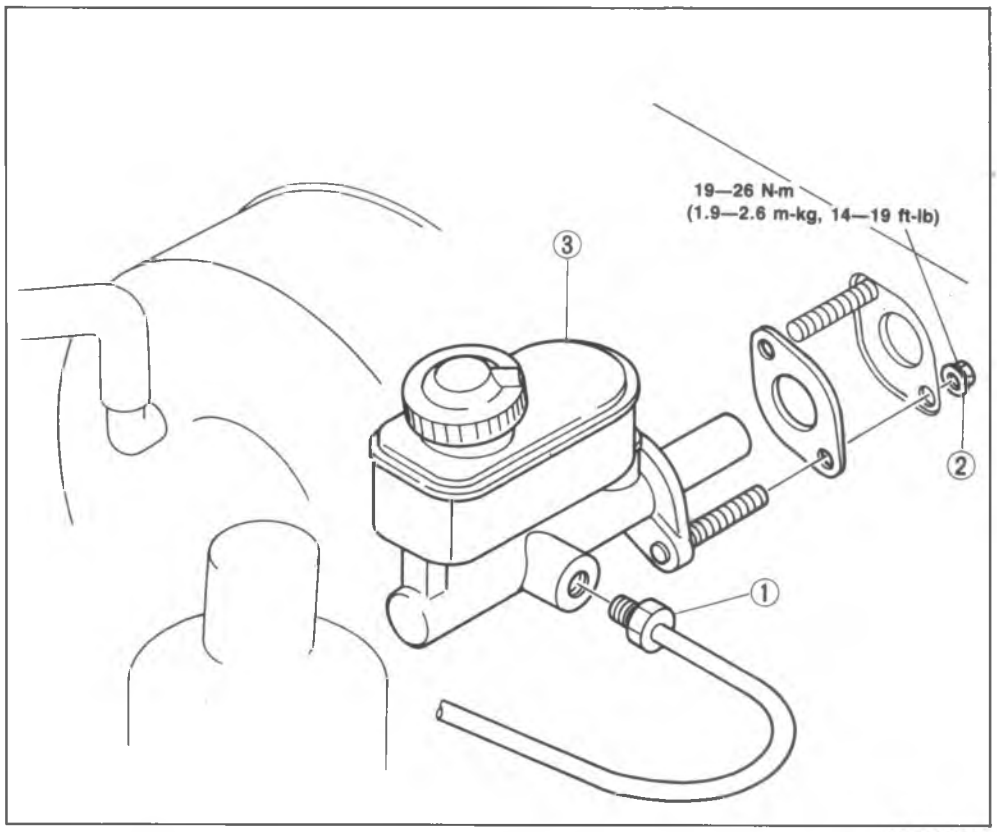

86U06X-008

1. Clutch pipe
2. Nuts
3. Clutch master cylinder

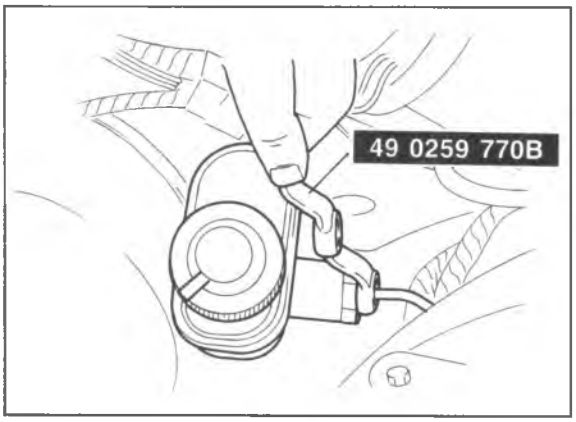

86U06X-009

REMOVAL

1. Remove the ABS relay box.
2. Disconnect the clutch pipe with the **SST**.
3. Remove the mounting nuts.
4. Remove the clutch master cylinder.

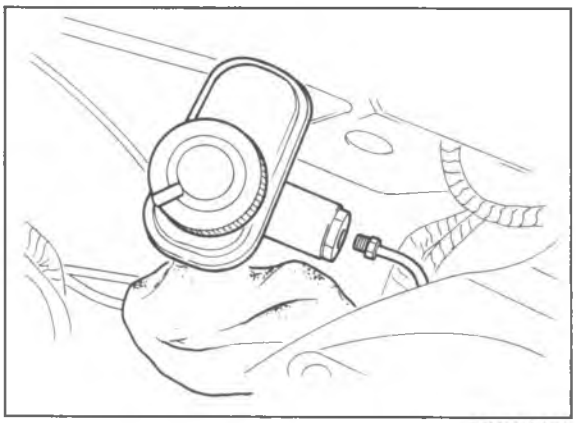

86U06X-010

Caution
Clutch fluid will damage painted surfaces. Be sure to use a container or rags to collect it. If fluid does get on a painted surface, wipe it off immediately with a rag.

DISASSEMBLY

86U06X-011

1. Snap ring
2. Piston and secondary cup assembly
3. Spacer
4. Primary cup
5. Return spring
6. Tank cap and baffle
7. Reserve tank
8. Bushing
9. Cylinder body

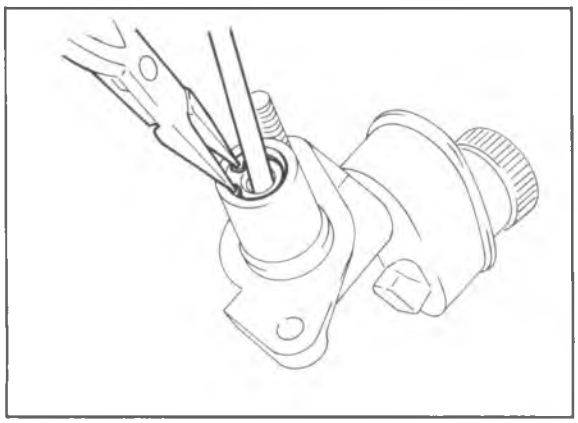

86U06X-012

Caution
When disassembling or assembling the clutch master cylinder, do so in a clean space free from dirt and dust.

1. Press down on the piston with a phillips screwdriver and remove the snap ring with snap ring pliers.

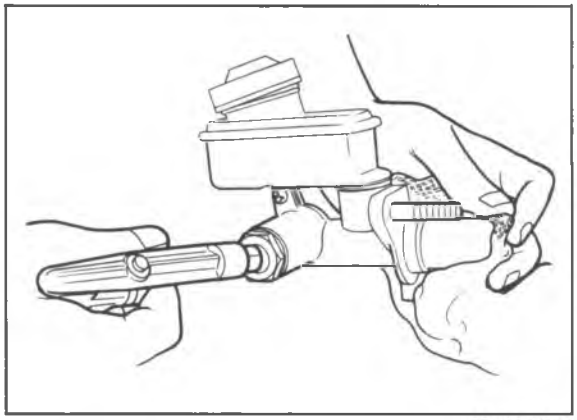

86U06X-013

2. Remove the piston and secondary cup assembly by blowing compressed air through the clutch pipe installation hole.

Caution
When doing so, use a rag to prevent the piston and secondary cup assembly from projecting out.

3. Remove the spacer, primary cup, and return spring.
4. Remove the screw, then remove the tank cap and baffle.
5. Remove the bushing, if necessary.

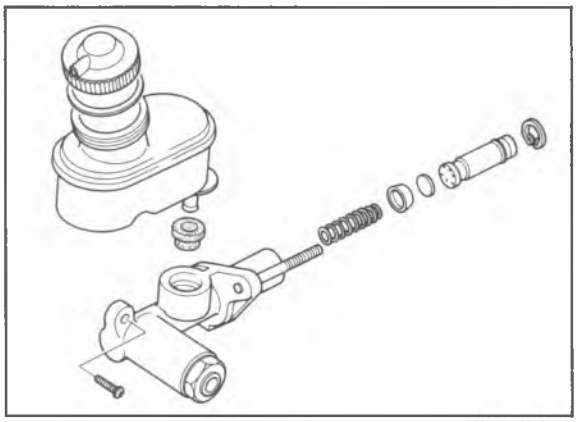

86U06X-014

INSPECTION

After cleaning all parts, check the following points. Replace any parts with new parts, if necessary. Note that rubber parts should be cleaned with clutch fluid.

1. Wear or damage of cylinder wall and/or piston.
2. Weakness of return spring.
3. Wear or damage of piston cup.
4. Damaged or bent reserve tank and/or reserve tank installation part.

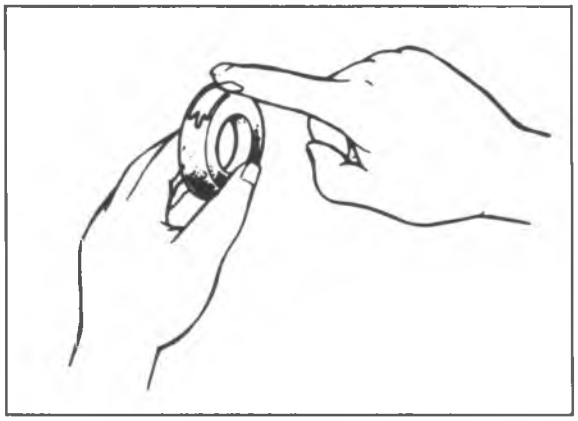

86U06X-015

ASSEMBLY

Apply clean clutch fluid to the piston cup and the cylinder bore before assembly.

Caution
After applying clutch fluid, check that no foreign material is on the cup.

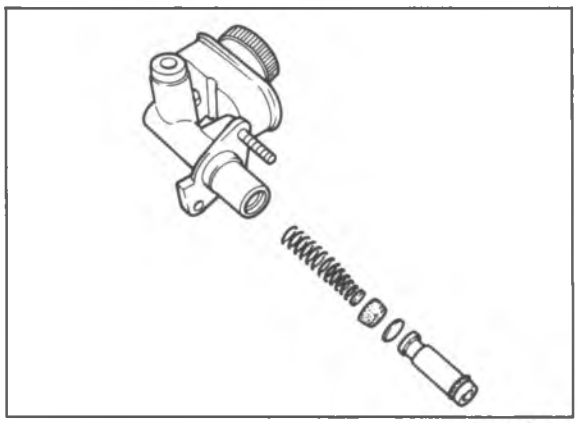

86U06X-016

1. Install the new bushing.
2. Install the reserve tank, baffle and tank cap.
3. Install the following parts:
   (1) Return spring
   (2) Primary cup
   (3) Spacer
   (4) New piston and secondary cup assembly

Caution
A new primary cup, piston, and secondary cup assembly must be used.

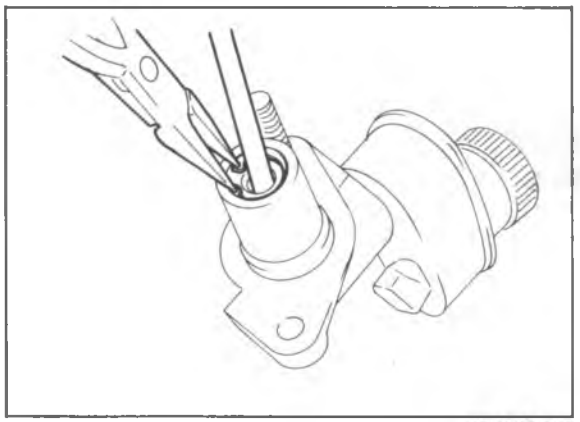

86U06X-017

4. While pressing the piston with a screwdriver, install the snap ring.

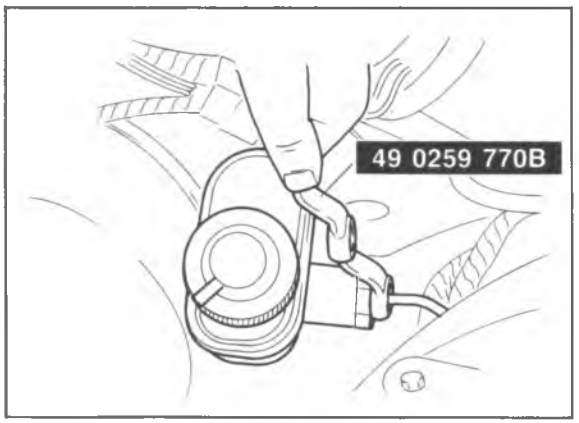

86U06X-018

INSTALLATION

1. Install the clutch master cylinder.
2. Tighten the mounting nuts.

   Tightening torque:
   19—26 N·m (1.9—2.6 m-kg, 14—19 ft-lb)

3. Tighten the clutch pipe flare nut securely with the **SST**.
4. Install the ABS relay box.

After installation

1. Perform air bleeding.
2. Verify that there is no leakage.
3. Perform a road test.

CLUTCH RELEASE CYLINDER

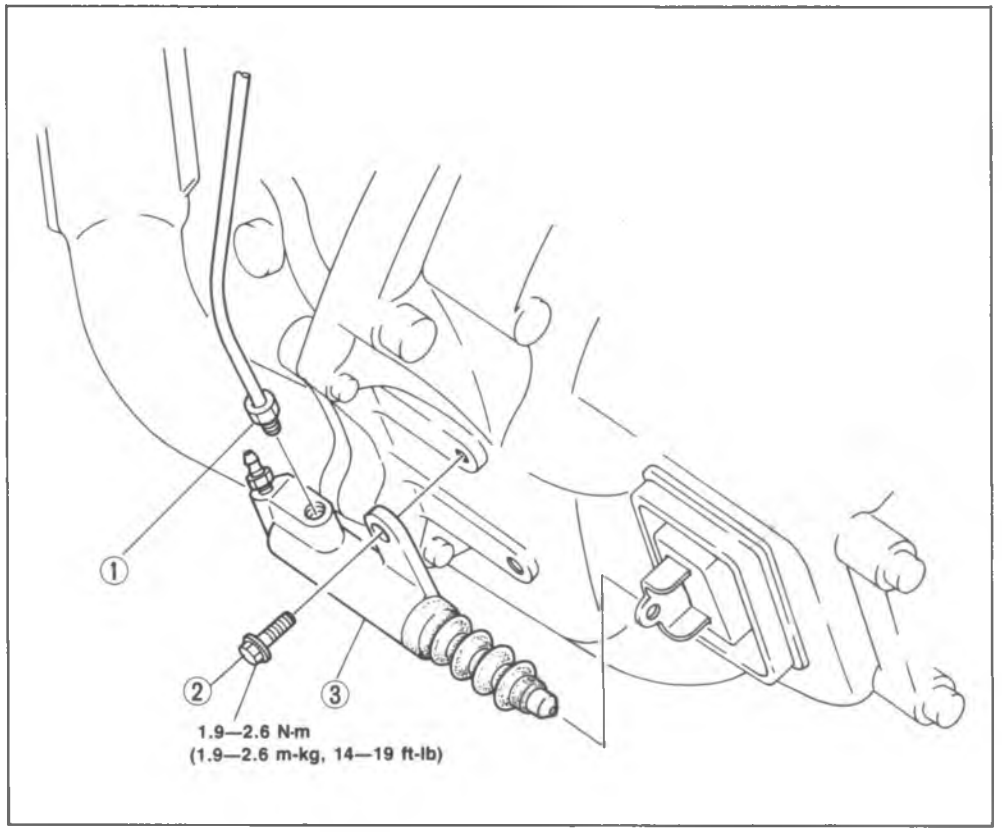

86U06X-019

1. Clutch pipe flare nut
2. Installation bolts
3. Release cylinder

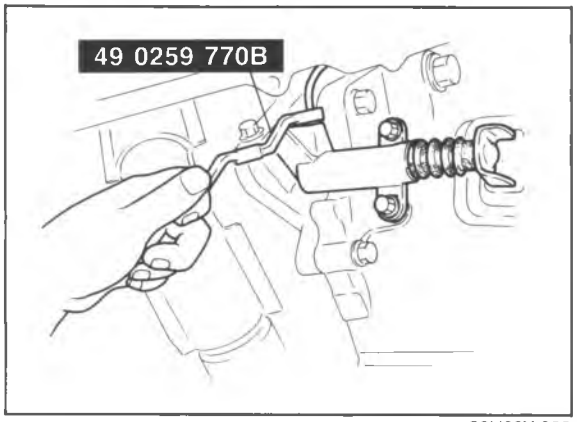

86U06X-020

REMOVAL

1. Disconnect the clutch pipe, with the **SST**.

Note
Plug the pipe in order to prevent fluid from leaking.

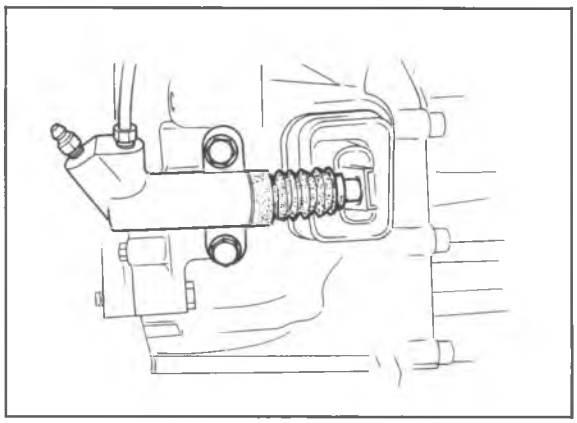

86U06X-021

2. Remove the installation bolts.
3. Remove the release cylinder.

DISASSEMBLY

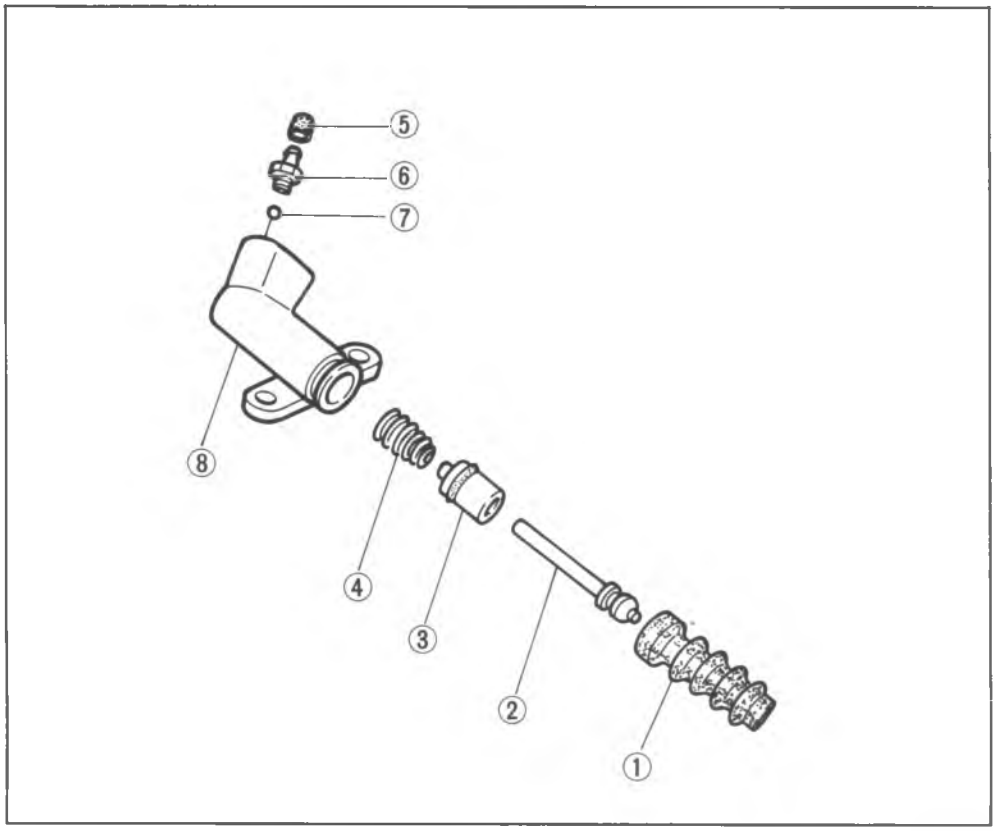

86U06X-022

1. Boot
2. Push rod
3. Piston and piston cup
4. Return spring
5. Bleeder cap
6. Bleeder screw
7. Steel ball
8. Cylinder body

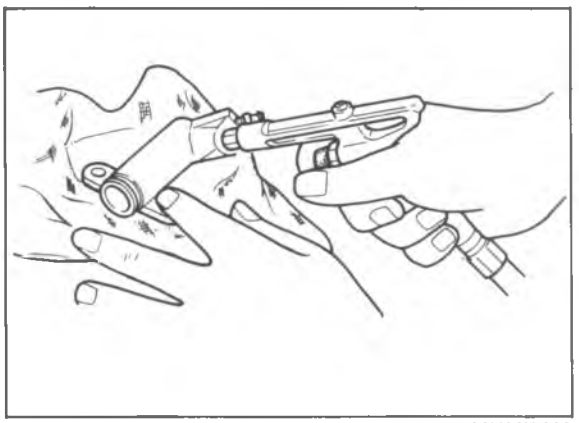

86U06X-023

1. Pull out the push rod and boot.
2. Remove the piston and piston cup by blowing compressed air through the clutch pipe installation hole.

Caution
When doing so, use a rag to prevent the piston and piston cup assembly from projecting out.

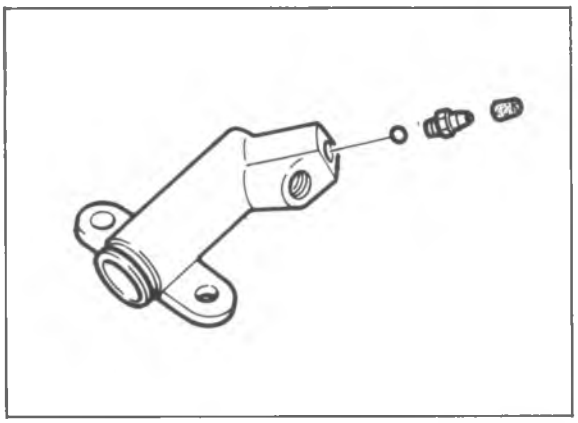

86U06X-024

3. Remove the return spring.
4. Remove the following parts if necessary:
   (1) Bleeder cap
   (2) Bleeder screw
   (3) Steel ball

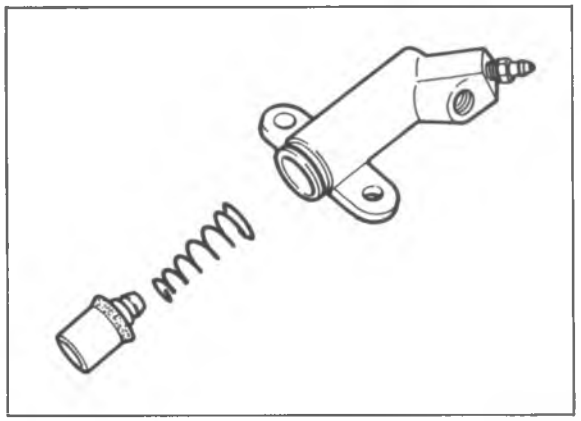

76U06X-029

INSPECTION

After cleaning all parts, check the following points. Replace any parts with new parts if necessary. Note that rubber parts should be cleaned with clutch fluid.

1. Wear or damage of cylinder wall and piston.
2. Weakness of return spring.
3. Wear or damage of piston cup.

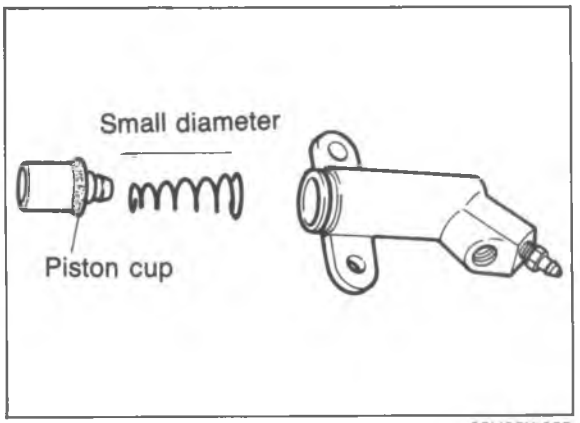

86U06X-025

ASSEMBLY

1. Install the following parts:
   (1) Steel ball
   (2) Bleeder screw
   (3) Bleeder cap
2. Install the return spring.
3. Install the new piston and piston cup assembly.

Caution
a) A new piston and piston cup assembly must be used.
b) Make sure the return spring and piston cup assembly are as illustrated.

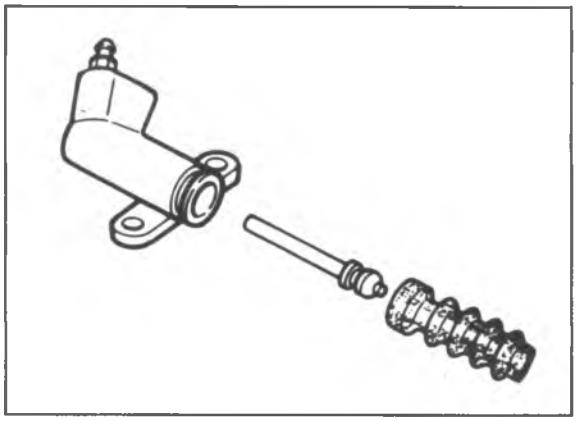

76U06X-031

4. Install the following parts:
   (1) Push rod
   (2) Boot

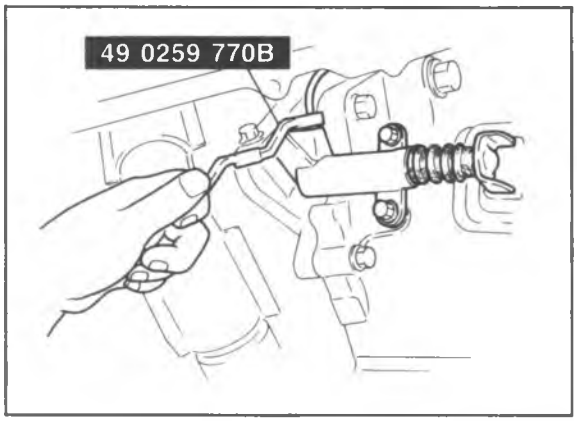

86U06X-026

INSTALLATION

1. Install the release cylinder.
2. Tighten the installation bolts.

   Tightening torque:
   19—26 N·m (1.9—2.6 m-kg, 14—19 ft-lb)

3. Tighten the clutch pipe flare nut securely with the **SST**.

After installation

1. Perform air bleeding.
2. Verify that there is no leakage from the hydraulic circuit.
3. Perform a road test.

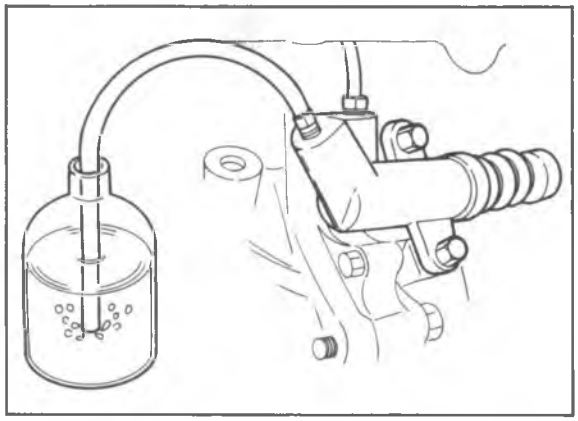

86U06X-027

AIR BLEEDING

The clutch hydraulic system must be bled to remove air that entered when the pipes were disconnected. This bleeding is done as described below.

Note

a) The fluid in the reserve tank must be maintained at the 3/4 level or higher during air bleeding.
b) Use only the specified fluid type. (Refer to page 6—3)
c) Be careful not to spill clutch fluid onto a painted surface.

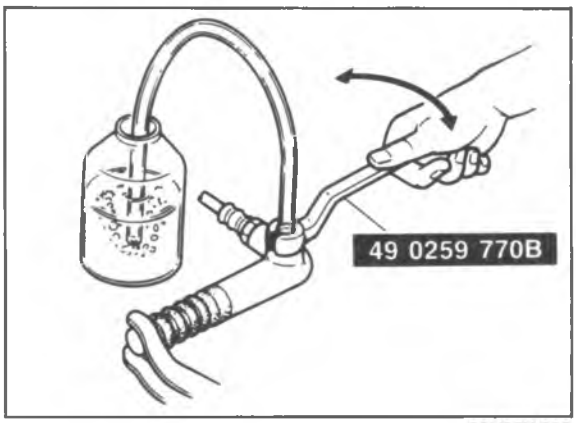

86U06X-028

1. Remove the bleeder cap, and attach a vinyl hose to the bleeder screw.
2. Place the other end of the vinyl tube in a glass container of the appropriate capacity.
3. Slowly pump the clutch pedal several times by hand.
4. While the clutch pedal is depressed, loosen the bleeder screw to let fluid and air escape.
   Then close the bleeder screw.
5. Repeat step 3 and 4 until no more air bubbles are in the fluid.
6. Check for correct clutch operation.

CLUTCH AND FLYWHEEL

REMOVAL

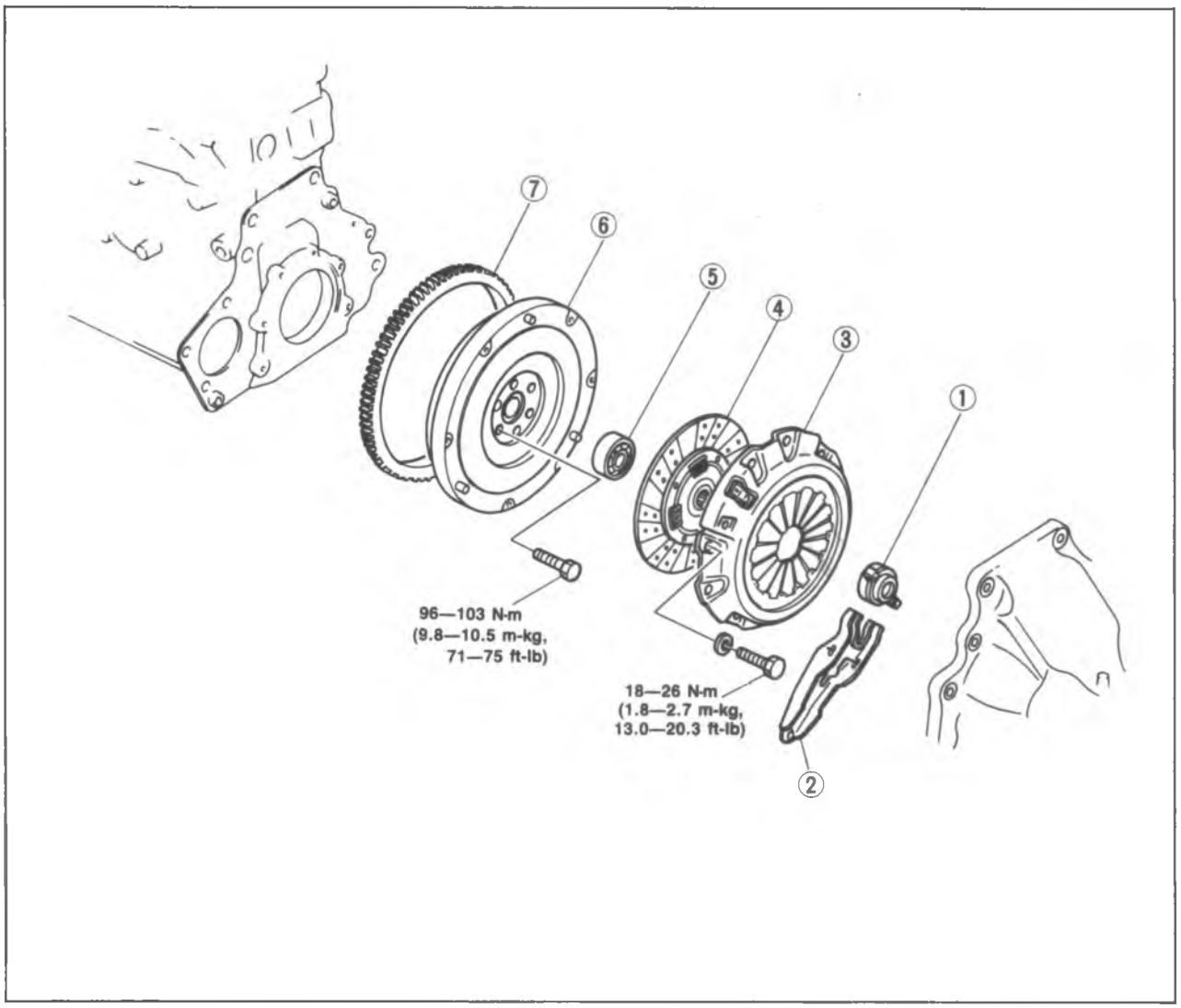

86U06X-029

1. Clutch release bearing
2. Clutch release fork
3. Clutch cover
4. Clutch disc
5. Pilot bearing
6. Flywheel
7. Ring gear

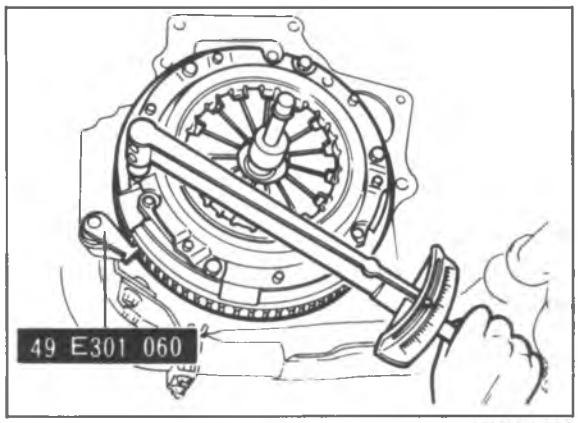

86U06X-030

1. Remove the transaxle. (Refer to Section 7).
2. Attach the **SST** to the engine, and remove the clutch cover and clutch disc.

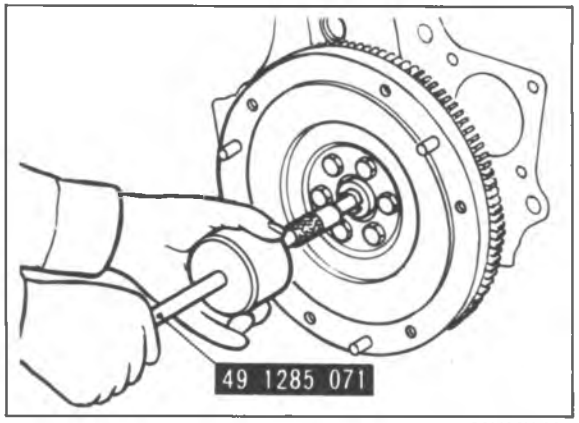

86U06X-031

3. Remove the pilot bearing from the crankshaft with the **SST**.

Note
Do not remove the bearing if it is not necessary.

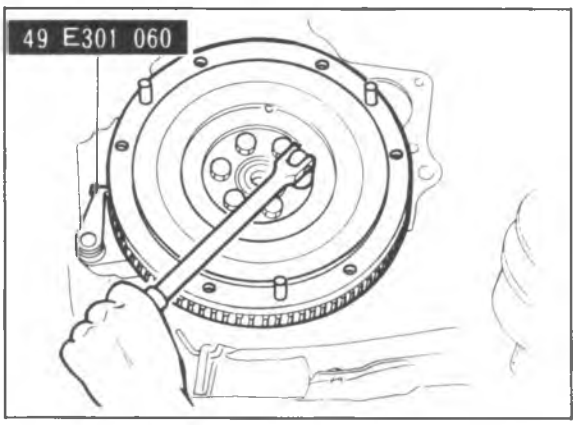

86U06X-032

4. Remove the flywheel.

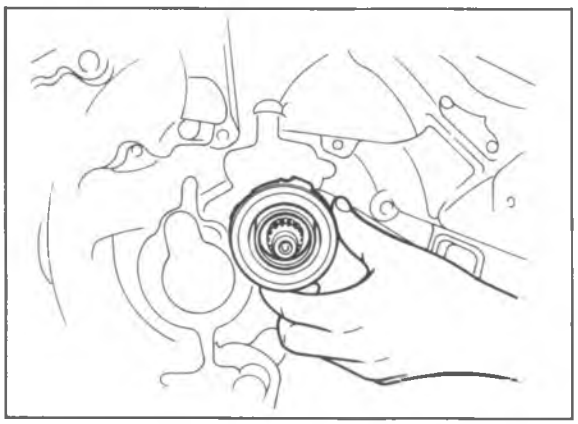
86U06X-033

5. Remove the release bearing.
6. Remove the release fork.

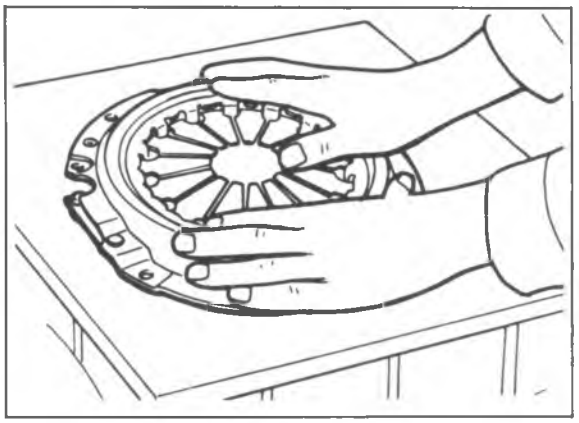
86U06X-034

INSPECTION
Check the following and repair or replace any faulty parts.

Clutch Cover
1. Clutch disc for scoring, cracks, or discoloration.

Note
Minor scratches or discoloration should be removed with sandpaper.

2. Diaphragm spring and cover for damage.

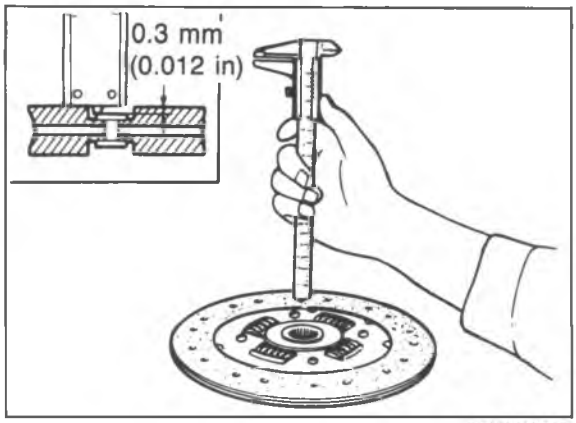

86U06X-035

Clutch Disc

1. Facing surface for hardening or presence of oil.

   Note
   Use sandpaper if the trouble is minor.

2. Loose facing rivets.
3. Worn clutch disc.
   Measure the depth to the rivet heads with a slide caliper.

   Depth: 0.3 mm (0.012 in) min.

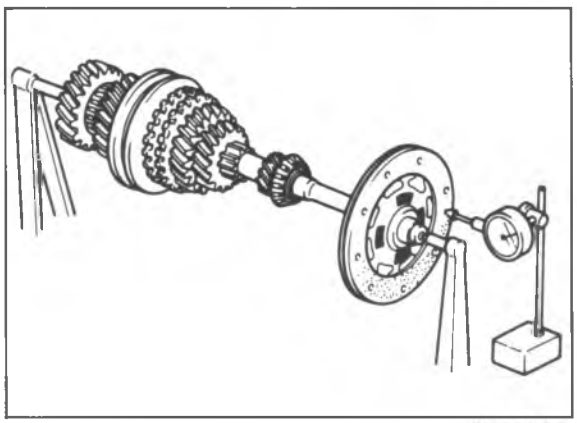
86U06X-036

4. Runout of clutch disc.

   Runout: 1.0 mm (0.039 in) max.

5. Wear or rust on the splines.
   Remove any minor rust.

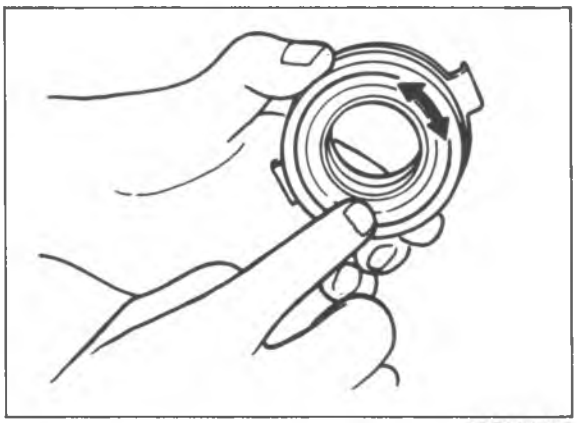
4BG06X-027

Clutch Release Bearing

1. Turn the bearing both directions and check for any binding or abnormal noise.
2. Worn or damaged diaphragm spring.

   Caution
   The clutch release bearing is a sealed bearing and must not be washed.

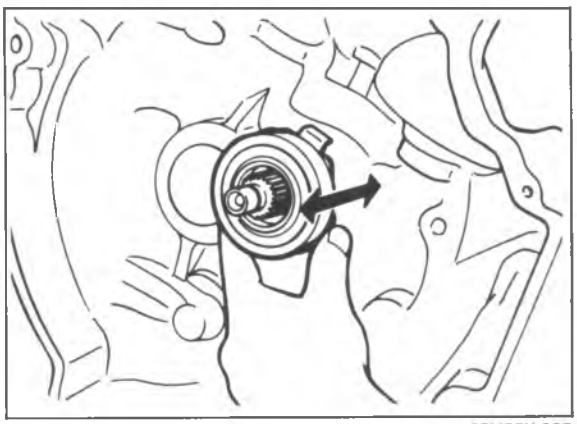
63U06X-025

3. Sliding condition of bearing.
   Install the bearing on the clutch housing extension and check for smooth movement.

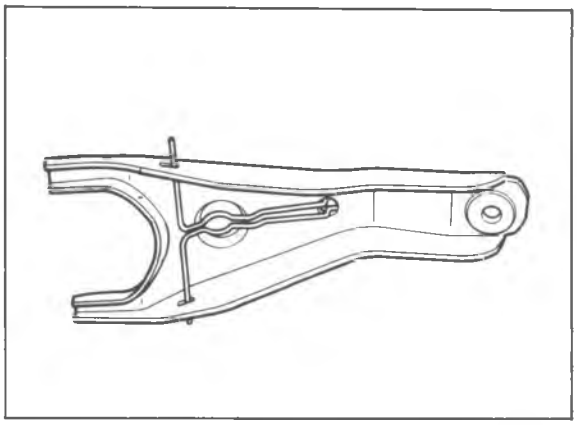

67U06X-035

Clutch Release Fork
Cracked or bent clutch release fork.

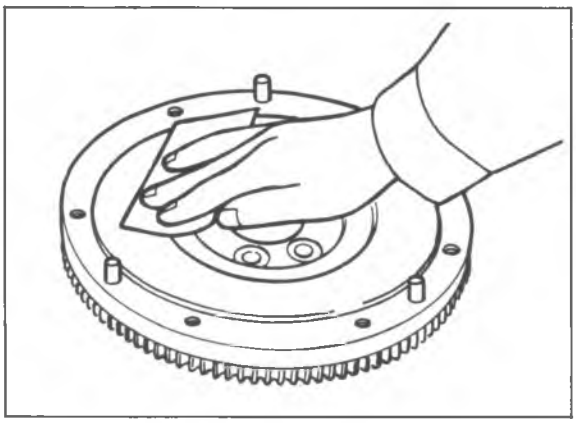

4BG06X-028

Flywheel
1. Surface marks, scoring or discoloration of clutch contact surface.

Note
If the problem is minor, repairs can be made by cleaning with sandpaper.

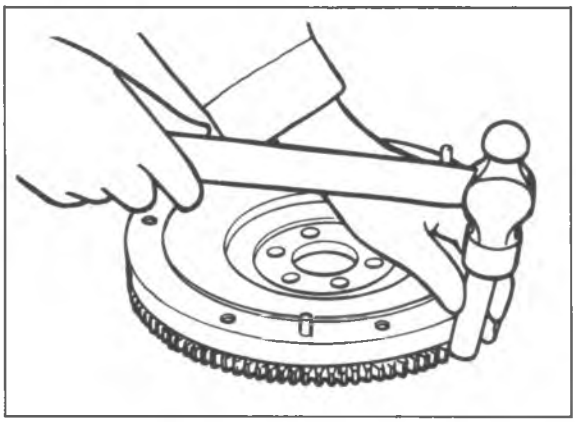

4BG06X-029

2. Damaged or worn ring gear teeth.
   If necessary, replace the ring gear as follows:

   (1) Heat the ring gear with a blowtorch, then tap around the gear to remove it from the flywheel.
   (2) Heat the new ring gear to 250—300°C (480—570°F), then fit it onto the flywheel.

Caution
The bevelled side of the ring gear must face toward the engine side.

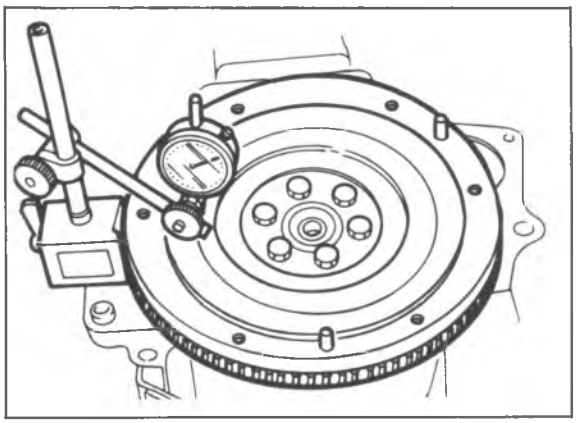

86U06X-037

3. Runout of flywheel
   (1) To measure, set a dial indicator on the clutch disc contact surface, and turn the flywheel.

Runout: 0.2 mm (0.008 in) max.

   (2) If the runout exceeds specification repair by grinding.

Grinding limit: 0.5 mm (0.020 in) max.

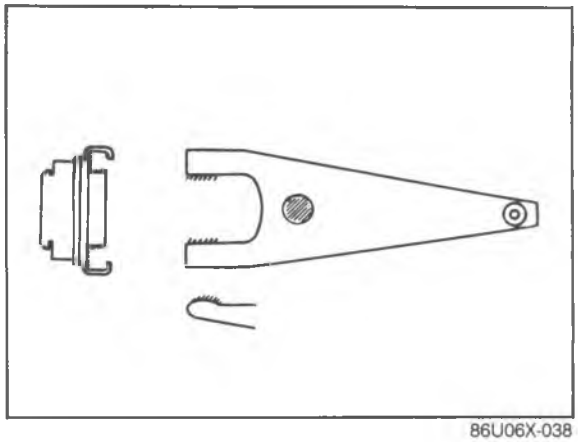

86U06X-038

INSTALLATION

1. Apply clutch grease (**Mori While TA No.2** or equivalent organic molybdenum grease) to the clutch release bearing and fork, indicated by the shaded lines in the figure.

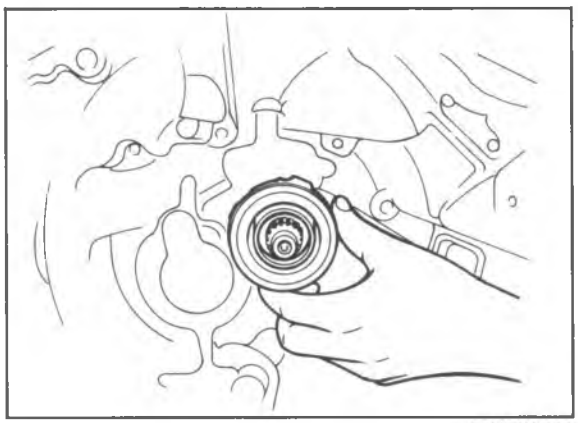

86U06X-039

2. Install the clutch release fork and release bearing.

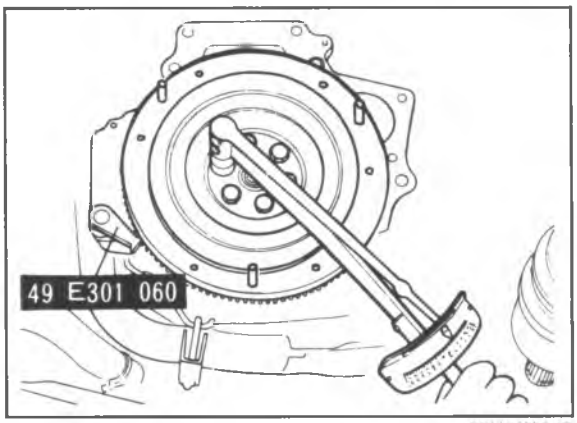

86U06X-040

3. Install the flywheel, then attach the **SST** and tighten the flywheel installation bolts.

   Tightening torque:
   96—103 N·m (9.8—10.5 m-kg, 71—75 ft-lb)

   Caution
   If reusing the flywheel bolts, clean the threads to remove old sealant, and apply new sealant. If old sealant cannot be removed, replace the bolts.

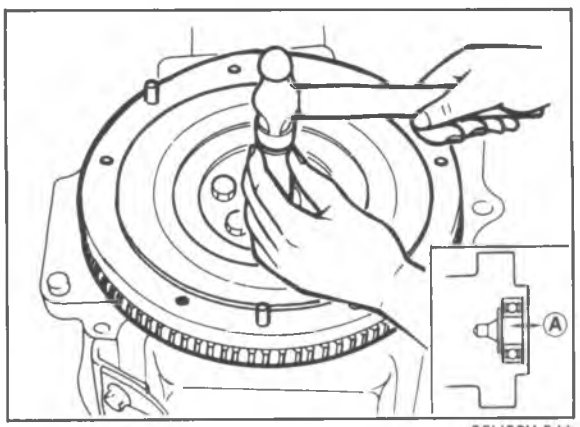

86U06X-041

4. Install the pilot bearing in the flywheel using a suitable bar and a hammer.

   Caution
   a) Tap it in until distance A in the figure is 3.8—4.2 mm (0.150—0.165 in).
   b) Put a small amount of clutch grease (Mori White TA No.2 or equivalent organic molybdenum grease).

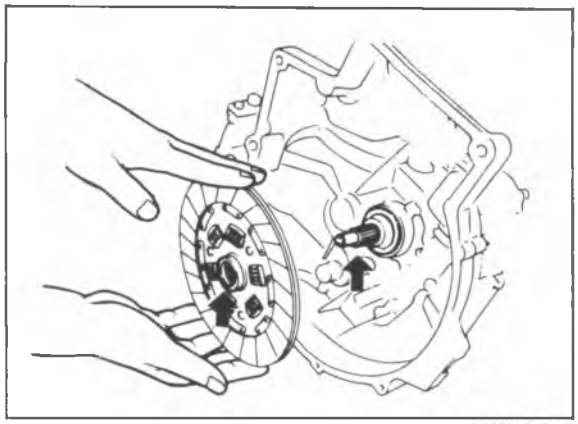

86U06X-042

5. Clean the clutch disc splines and primary shaft splines, then apply clutch grease (**Mori White TA No. 2 or equivalent organic molybdenum grease**).

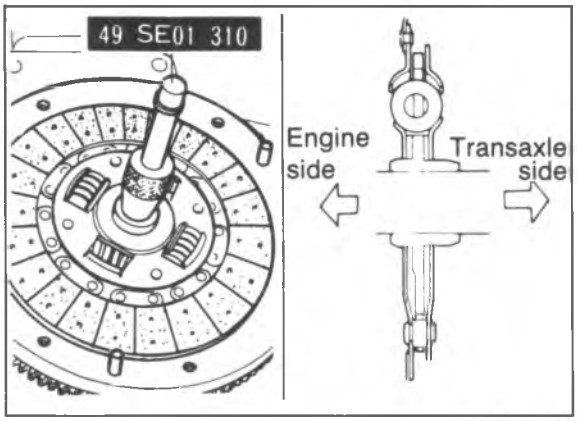

86U06X-043

6. Install the clutch disc with the **SST**.

Note
Install the clutch so that it faces in the direction shown in the figure.

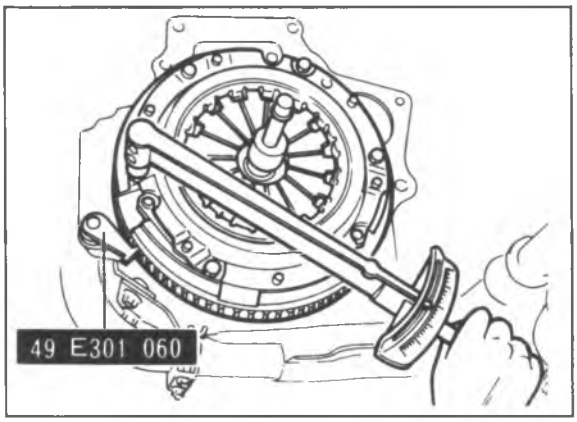

86U06X-044

7. Install the **SST**, and tighten the clutch cover diagonally and evenly.

Tightening torque: 18—26 N·m (1.8—2.7 m-kg, 13.0—20.3 ft-lb)

8. Install the transaxle. (Refer to Section 7A.)

MANUAL TRANSAXLE

New G-type (Non-Turbo)

OUTLINE ..... **7A— 2**
STRUCTURAL VIEW ..... **7A— 2**
CROSS-SECTIONAL VIEW..... **7A— 4**
SPECIFICATIONS ..... **7A— 6**
TROUBLESHOOTING GUIDE ..... **7A— 7**
ON-VEHICLE MAINTENANCE..... **7A— 8**
TRANSAXLE OIL ..... **7A— 8**
DRIVESHAFT OIL SEALS..... **7A— 9**
REMOVAL ..... **7A—12**
DISASSEMBLY..... **7A—17**
STEP 1 ..... **7A—17**
STEP 2 ..... **7A—19**
STEP 3 ..... **7A—21**
STEP 4 ..... **7A—24**
INSPECTION ..... **7A—25**
ASSEMBLY..... **7A—28**
STEP 1 ..... **7A—28**
STEP 2 ..... **7A—30**
STEP 3 ..... **7A—35**
STEP 4 ..... **7A—43**
INSTALLATION ..... **7A—78**
TRANSAXLE CONTROL ..... **7A—84**

H-type (Turbo)

OUTLINE ..... **7A— 3**
STRUCTURAL VIEW ..... **7A— 3**
CROSS-SECTIONAL VIEW..... **7A— 5**
SPECIFICATIONS ..... **7A— 6**
TROUBLESHOOTING GUIDE ..... **7A— 7**
ON-VEHICLE MAINTENANCE..... **7A— 8**
TRANSAXLE OIL ..... **7A— 8**
DRIVESHAFT OIL SEALS..... **7A— 9**
REMOVAL ..... **7A—12**
DISASSEMBLY..... **7A—48**
STEP 1 ..... **7A—48**
STEP 2 ..... **7A—50**
STEP 3 ..... **7A—52**
STEP 4 ..... **7A—55**
INSPECTION..... **7A—57**
ASSEMBLY..... **7A—61**
STEP 1 ..... **7A—61**
STEP 2 ..... **7A—63**
STEP 3 ..... **7A—67**
STEP 4 ..... **7A—74**
INSTALLATION ..... **7A—78**
TRANSAXLE CONTROL ..... **7A—84**

86U07A-001

OUTLINE

STRUCTURAL VIEW (Non-Turbo)

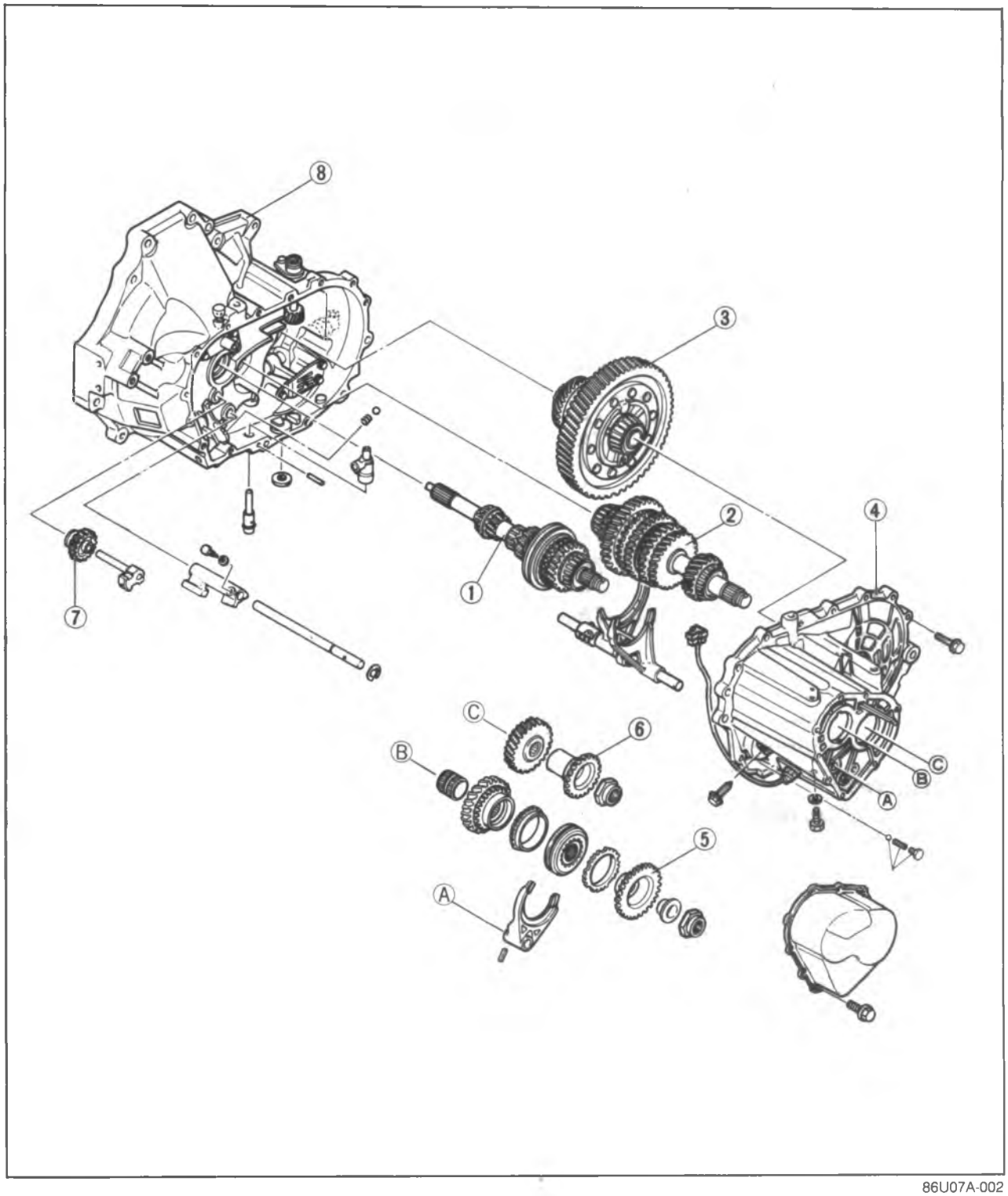

86U07A-002

1. Primary shaft gear assembly
2. Secondary shaft gear assembly
3. Differential assembly
4. Clutch housing
5. Primary reverse synchronizer gear
6. Secondary reverse synchronizer gear
7. Reverse idle gear
8. Transaxle case

OUTLINE

STRUCTURAL VIEW (Turbo)

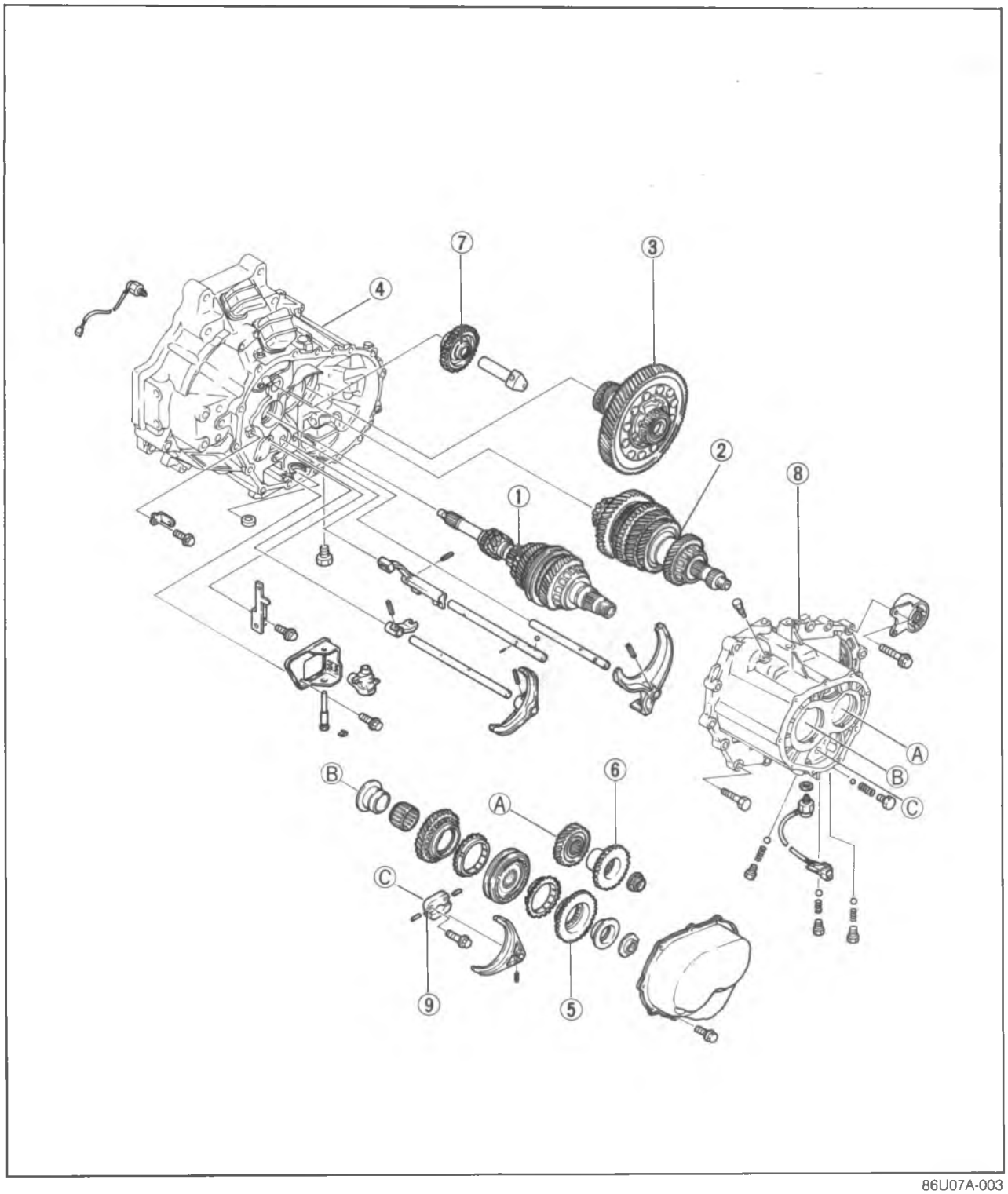

86U07A-003

1. Primary shaft gear assembly
2. Secondary shaft gear assembly
3. Differential assembly
4. Clutch housing
5. Primary reverse synchronizer gear
6. Secondary reverse synchronizer gear
7. Reverse idle gear
8. Transaxle case
9. Interlock plate

CROSS-SECTIONAL VIEW (Non-Turbo)

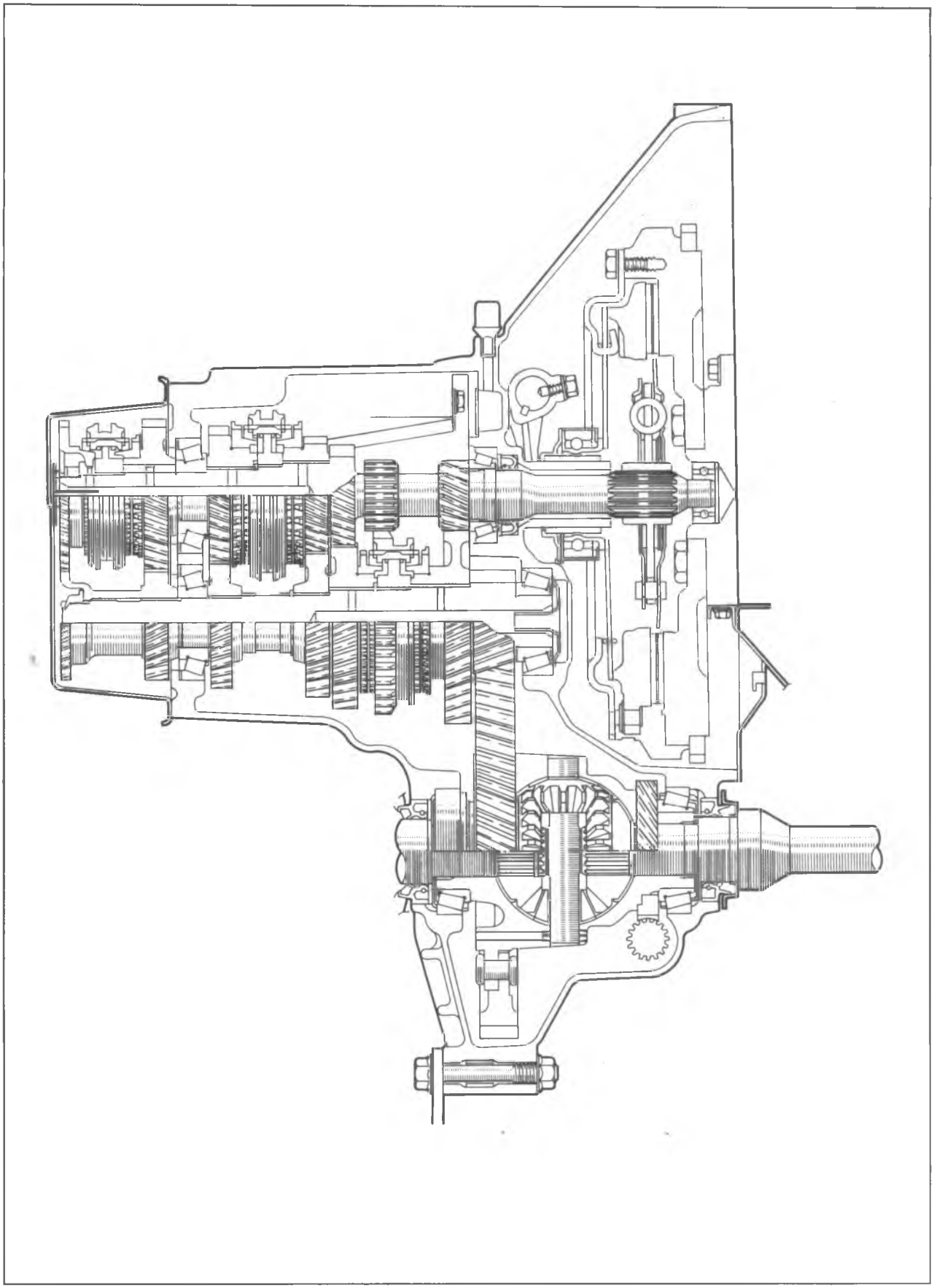

86U07A-004

CROSS-SECTIONAL VIEW (Turbo)

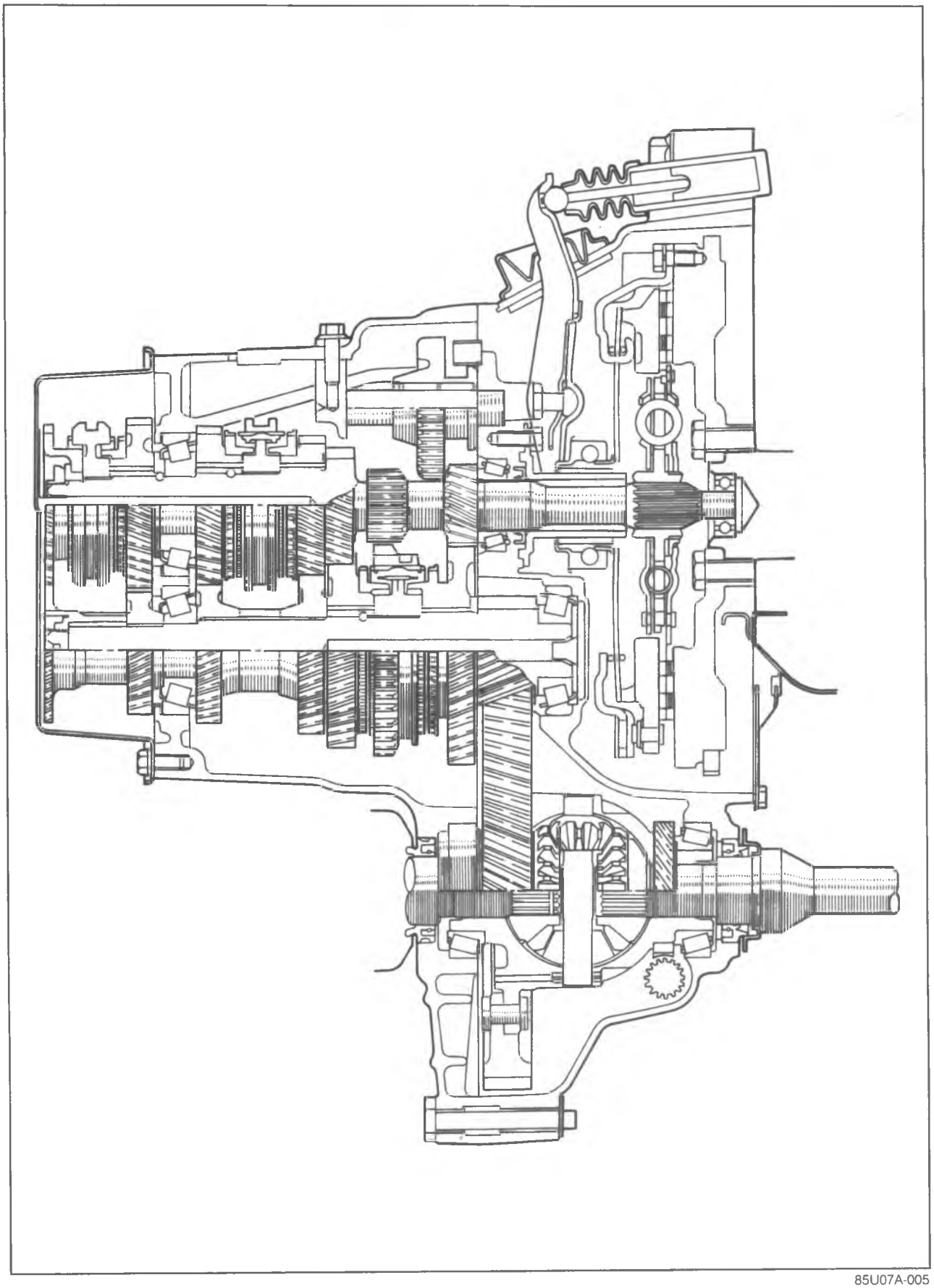

85U07A-005

SPECIFICATIONS

Item \ Engine model		Non-Turbo (G-type)	Turbo (H-type)
Transaxle control		Floor shift	
Synchromesh system		Forward.....synchromesh, Reverse.....selective sliding and synchromesh	
Gear ratio	1st	3.307	3.250
	2nd	1.833	1.772
	3rd	1.233	1.194
	4th	0.914	0.926
	5th	0.717	0.711
	Reverse	3.166	3.461
Final gear ratio		4.105	
Oil	Type	ATF: DEXRON-II Above 0°F: API: GL-4 or GL-5 SAE 80W-90 or SAE 90	
	Capacity	3.35 liters (3.6 US qt, 3.0 Imp qt)	3.65 liters (3.9 US qt, 3.3 Imp qt)

76G07A-601

TROUBLESHOOTING GUIDE

Problem	Possible cause	Remedy	Page
Change lever won't shift smoothly, or is hard to shift	Seized change lever ball	Replace	7A—84
	Seized change control rod joint	Replace	7A—84
	Bent change control rod	Replace	7A—84
Too much play in change lever	Worn change control rod bushing	Replace	7A—84
	Weak spring of ball or change lever	Replace	7A—84
	Worn bushing of ball or change lever	Replace	7A—84
Difficult to shift	Bent change rod	Replace	7A—84
	No grease in transmission control	Lubricate with grease	7A—84
	Insufficient oil	Add oil	7A—8
	Deterioration of oil quality	Replace with oil of specified quality	7A—8
	Wear or play or shift fork or shift rod	Replace	7A—17,48
	Wear or synchronizer ring	Replace	7A—26,59
	Wear of synchronizer cone of gear	Replace	7A—26,59
	Bed contact of synchronizer ring and cone of gear	Replace	7A—26,59
	Excessive longitudinal play of gears	Replace	7A—21,52
	Wear of bearing	Adjust or replace	7A—21,52
	Wear of synchronizer key spring	Replace	7A—21,52
	Excessive primary shaft gear bearing preload	Adjust	7A—36,67
	Improperly adjusted change guide plate	Adjust	7A—19
Won't stay in gear	Bent change control rod	Replace	7A—84
	Worn change control rod bushing	Replace	7A—84
	Weak change lever ball spring	Replace	7A—84
	Improperly installed extension bar	Tighten	7A—84
	Wear of shift fork	Replace	7A—21,48
	Wear of clutch hub	Replace	7A—26,59
	Worn clutch hub sleeve	Replace	7A—26,59
	Worn gear sliding part of both shaft gears	Replace	7A—25,57
	Worn gear sliding part of each gear	Replace	7A—25,57
	Worn steel sliding groove of control end	Replace	7A—17,48
	Weak spring pressing against steel ball	Replace	7A—17,48
	Excessive thrust clearance	Replace	7A—32,65
	Worn bearing	Replace	7A—21,52
	Improperly installed engine mount	Tighten	7A—78
Abnormal noise	Insufficient oil	Add oil	7A—8
	Deterioration of oil quality	Replace	7A—8
	Worn bearing	Adjust or replace	7A—21,57
	Worn gear sliding surface of both shaft gears	Replace	7A—21,57
	Wear of sliding surfaces of gears	Replace	7A—21,52
	Excessive gear backlash	Replace	7A—21,52
	Damaged gear teeth	Replace with oil of specified quality	7A—25,57
	Foreign material in gears	Replace	7A—21,52
	Damaged differential gear, or excessive backlash	Adjust or replace	7A—29,62

76G07A-622

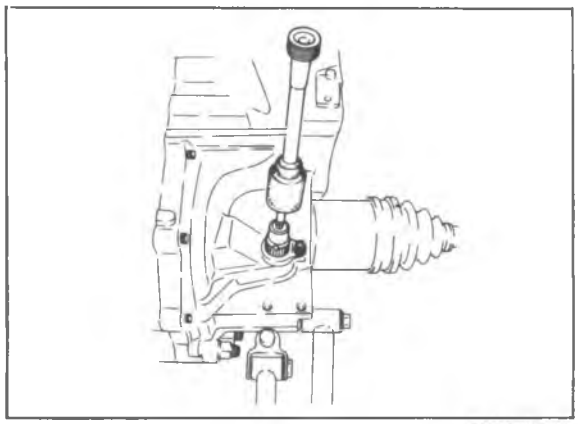

61G07X-189

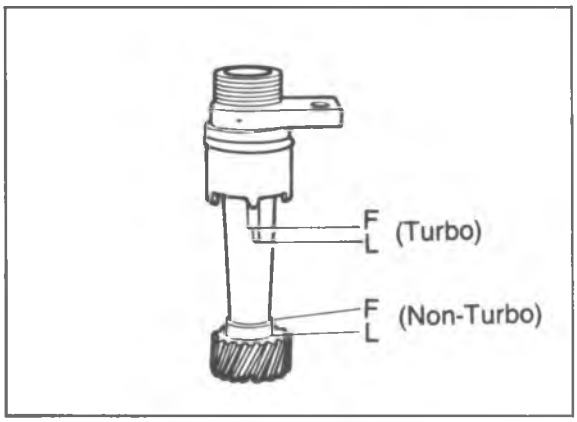

61G07X-190

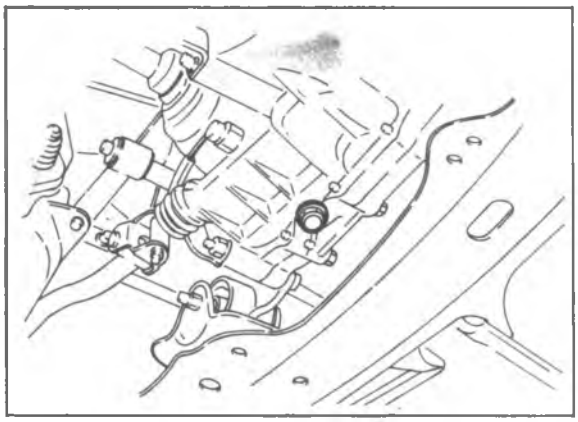

61G07X-191

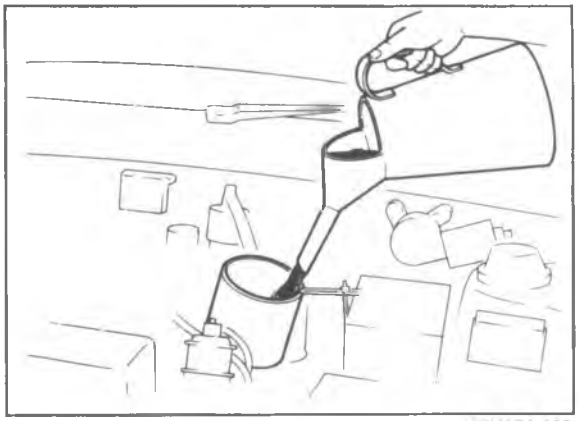

86U07A-008

ON-VEHICLE MAINTENANCE

TRANSAXLE OIL

Inspection

1. Park the vehicle on level ground.
2. Remove the speedometer cable dust cover, and disconnect the cable from the speedometer driven gear.
3. After removing the bolt, pull the gear case to remove it from the housing. (Insert a flat-tipped screwdriver between the speedometer gear case and the clutch housing, and use it to pry the gear case loose if necessary.)
4. Check that the oil level is between the "F" and "L".
5. If not, add the necessary amount of the specified oil through the gear case hole.

Replacement

1. Park the vehicle on level ground.
2. Remove the speedometer driven gear. (See "**Inspection**" section above.)
3. Remove the drain plug, and drain the oil.
4. Replace the drain plug, and add the necessary amount of the specified oil through the speedometer gear case hole.

Specified oil
Type
A.T.F.: DEXRON II
Above 0°F:
API: GL-4 or GL-5
SAE 80W-90 or SAE 90

Capacity:
Non-Turbo. 3.35 liters (3.6 US qt, 3.0 Imp qt)
Turbo. 3.65 liters (3.9 US qt, 3.3 Imp qt)

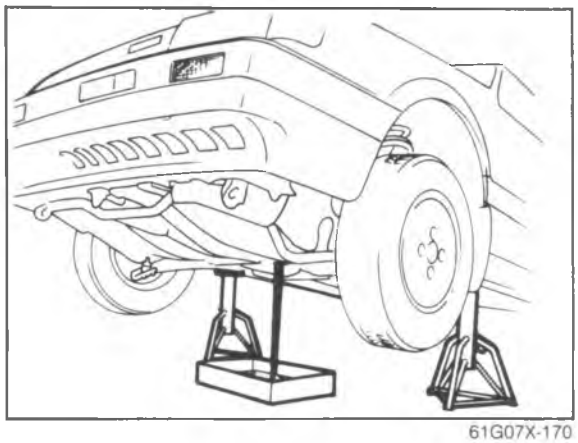

61G07X-170

DRIVESHAFT OIL SEALS

Replacement

Jack up the vehicle, support it on safety stands, and then drain the transaxle oil. Next, use the following procedure to replace the driveshaft oil seals:

1. Remove the front wheel(s).
2. Remove the splash shield(s).
3. Separate the front stabilizer from the lower arm.

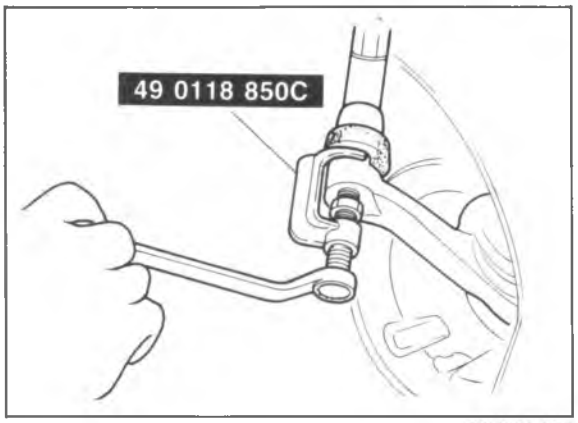

86U07A-009

4. Remove the clinch bolt and pull the lower arm downward. Separate the knuckle from the lower arm ball-joint.

   Note
   Be careful not to damage the ball-joint dust boot.

5. Remove the cotter pin then disconnect the tie-rod end with the **SST**.

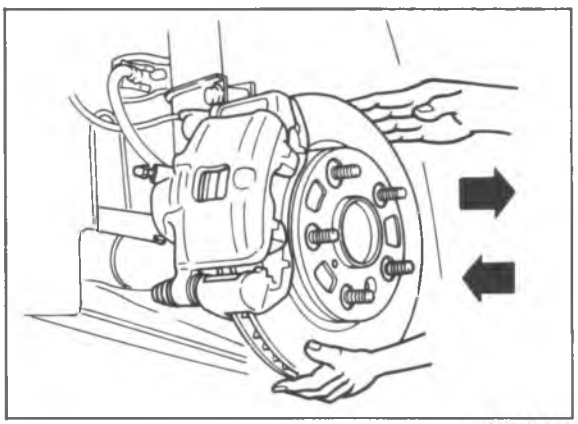

86U07A-010

6. Separate the driveshaft by pulling the front hub outward. Do not use too much force at once, increase the force gradually.

   Note
   a) Do not to allow the driveshaft ball-joint to be bent to its maximum extent.
   b) Support the driveshaft using string, wire, etc.

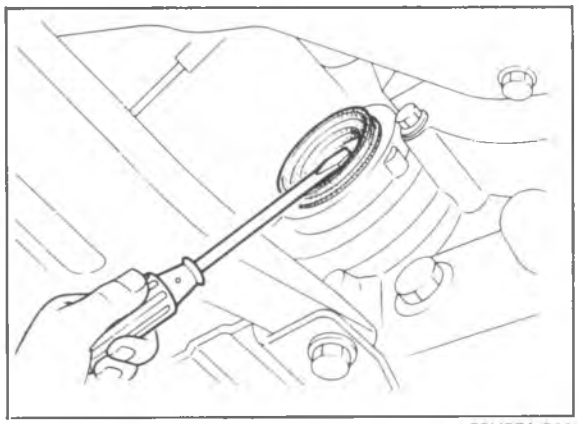

86U07A-011

7. Remove the oil seal with a flat-tipped screwdriver.

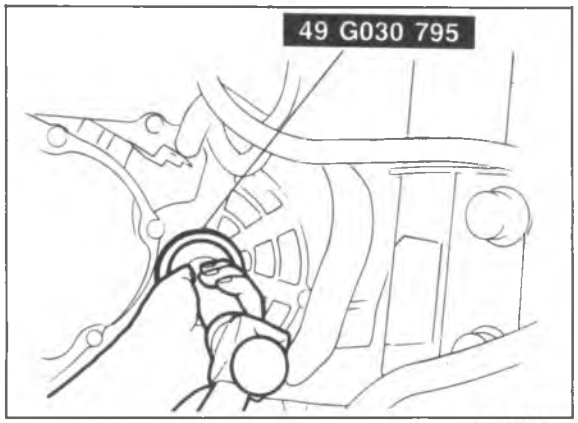

86U07A-012

8. Tap the new oil seal into the transaxle case with the **SST**.

Note
a) Tap in until the oil seal installer contacts the case.
b) Coat the oil seal lip with transaxle oil.

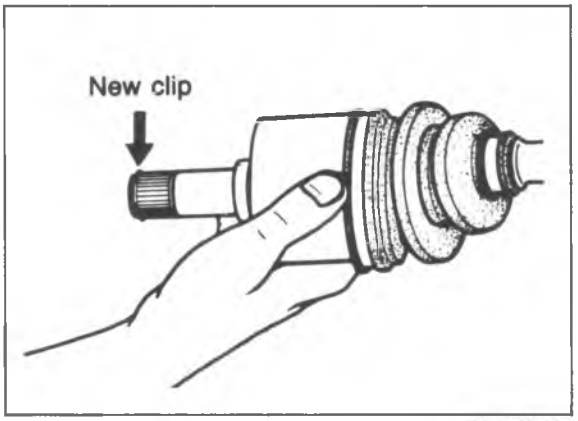

86U07A-013

9. Replace the driveshaft end clip with a new one. Insert the clip with the gap at the top of the groove.

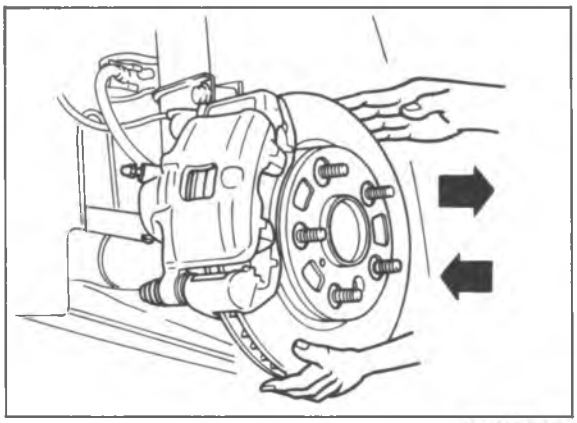

86U07A-014

10. Install the driveshaft as follows:
    (1) Pull the front hub outward, then fit the driveshaft into the transaxle.
    (2) Insert the driveshaft into the transaxle by pushing on the wheel hub assembly.

Note
a) Be careful not to damage the oil seal.
b) After installation is finished, pull the front hub slowly outward to check that the driveshaft is held securely by the clip.

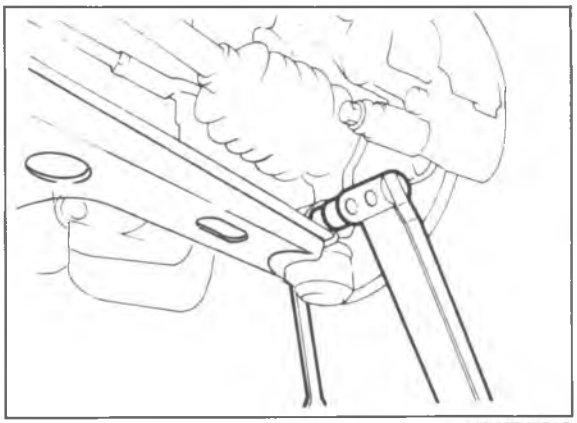

86U07A-015

11. Install the lower arm ball-joint to the knuckle, and tighten the clinch bolt.

Tightening torque:
43—54 N·m (4.4—5.5 m-kg, 32—40 ft-lb)

12. Install the tie-rod end and new cotter pin.

Tightening torque:
29—44 N·m (3.0—4.5 m-kg, 22—33 ft-lb)

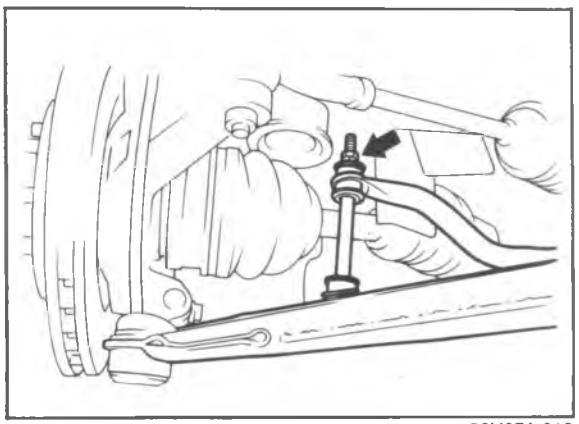

86U07A-016

13. Adjust and tighten the stabilizer.

Tightening torque:
16—23 N·m (1.6—2.3 m-kg, 12—17 ft-lb)
Dimension: 20.1 mm (0.79 in)

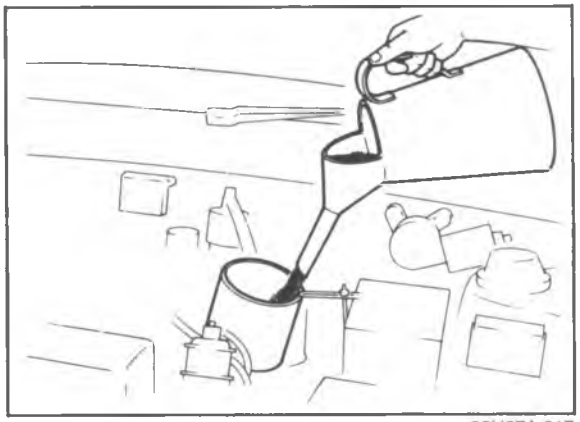

86U07A-017

14. Install the drain plug.

Tightening torque:
39—59 N·m (4.0—6.0 m-kg, 29—43 ft-lb)

15. Install the wheel.

Tightening torque:
88—118 N·m (9.0—12.0 m-kg, 65—87 ft-lb)

16. Add the correct quantity of the specified oil.

Type: A.T.F.: DEXRON II
Above 0°F:
API: GL-4 or GL-5
SAE 80W-90 or SAE 90

Capacity:
Non-Turbo. 3.35 liters (3.6 US qt, 3.0 Imp qt)
Turbo. 3.65 liters (3.9 US qt, 3.3 Imp qt)

REMOVAL

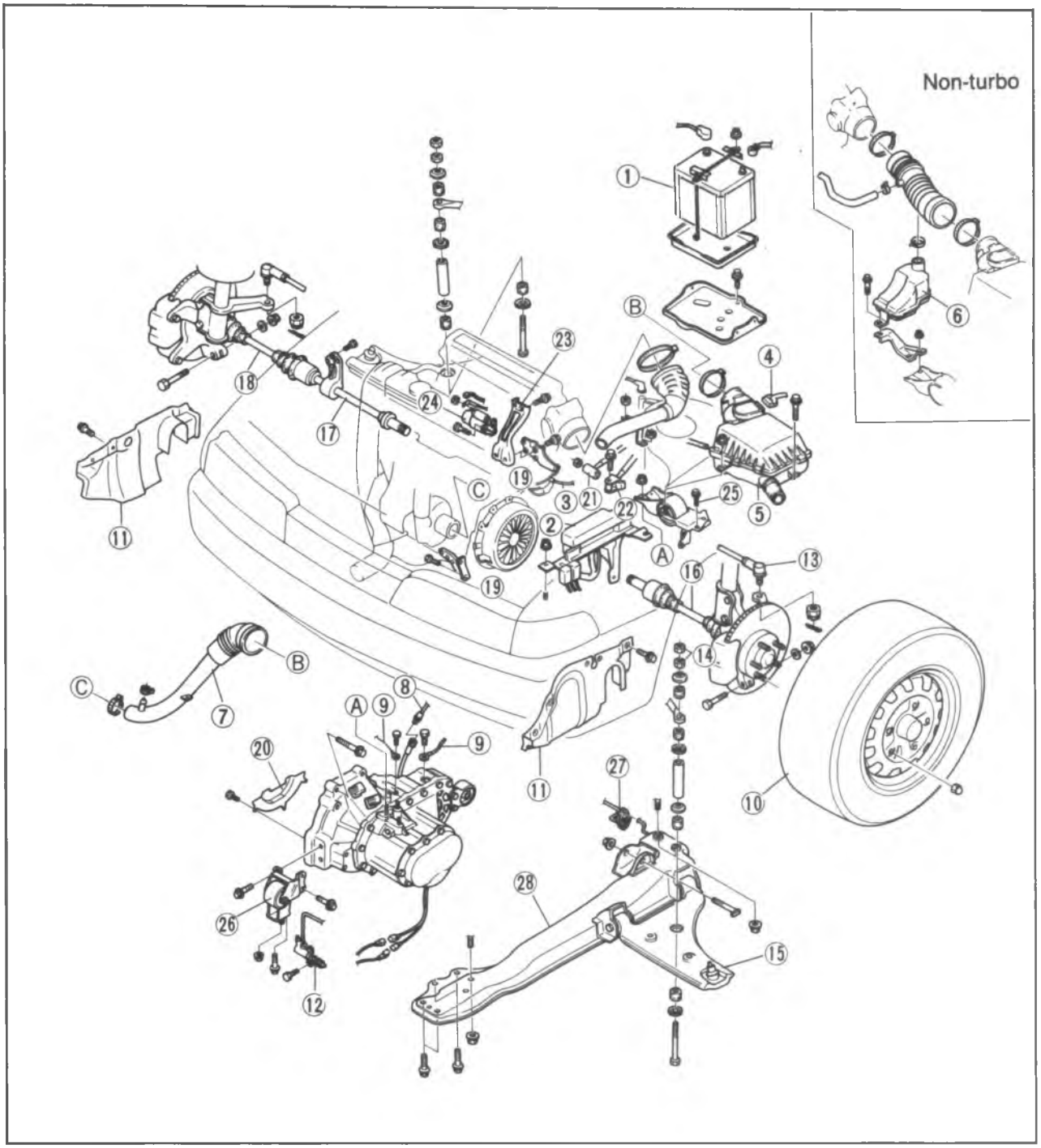

86U07A-018

1. Battery
2. Main fuse block
3. Distributor lead
4. Air flow meter connector
5. Air cleaner assembly
6. Resonance chamber (Non-Turbo)
7. Intercooler hose(s) (Turbo)
8. Speedometer cable
9. Ground(s)
10. Wheel(s)
11. Splash shield(s)
12. Clutch release cylinder
13. Tie-rod end
14. Nuts (stabilizer)
15. Lower arm ball-joint
16. Driveshaft (left)
17. Joint shaft
18. Driveshaft (right)
19. Gusset plate(s)
20. Under cover
21. Extension bar
22. Control rod
23. Surge tank bracket
24. Starter
25. Engine mount No.4
26. Engine mount No.2
27. Hanger rubber
28. Crossmember

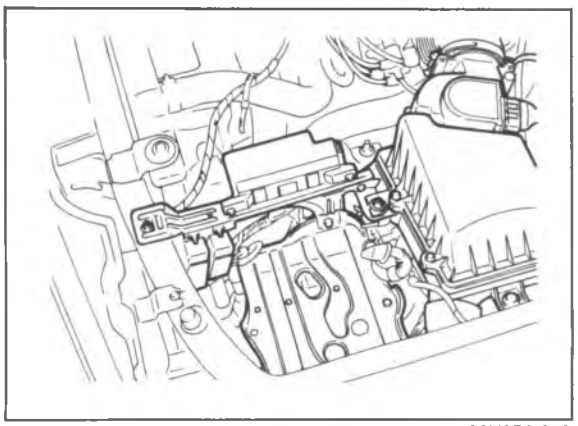

86U07A-019

REMOVAL

1. Remove the battery and battery carrier.
2. Disconnect the main fuse block.
3. Disconnect the distributor lead.
4. Disconnect the air flow meter connector and remove the air cleaner assembly.

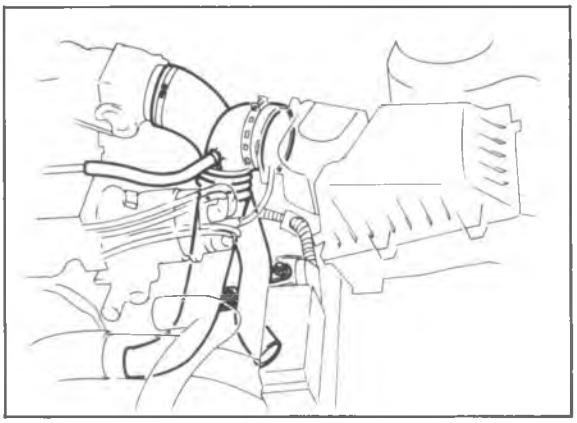

86U07A-020

[Turbo]

5. Remove the inter cooler hoses as follows.
   (1) Inter cooler hose to throttle body
   (2) Air cleaner to turbocharger

[Non-Turbo]

5. Remove the resonance chamber.

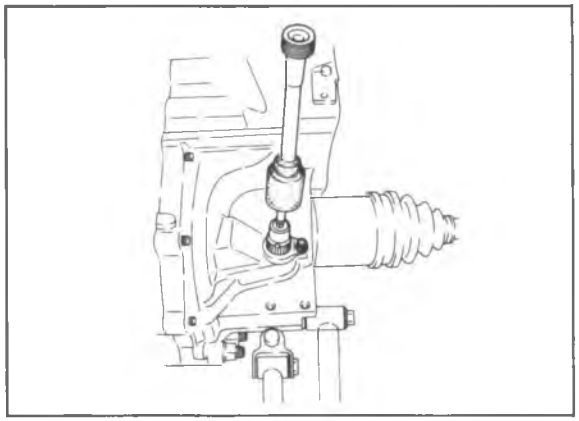

86U07A-021

6. Disconnect the speedometer cable.
7. Disconnect the grounds from the transaxle case.

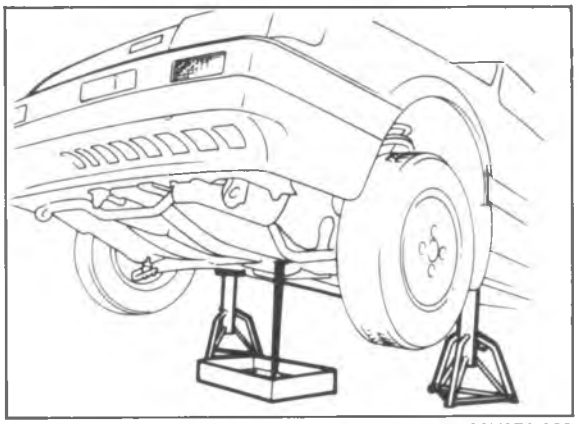

86U07A-022

8. Remove the front wheels.
9. Remove the splash shields.
10. Drain the transaxle oil.

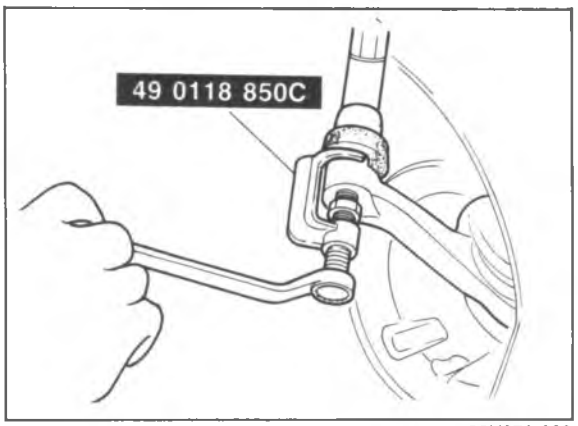

86U07A-023

11. Remove the clutch release cylinder.
12. Disconnect the tie-rod ends using **SST**.

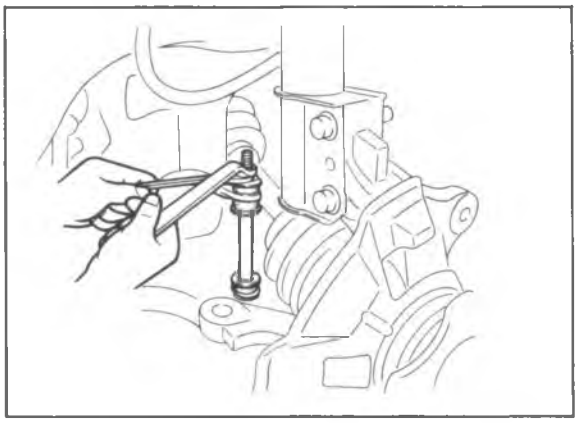

86U07A-024

13. Remove the stabilizer bar control links.
14. Remove the bolts and nuts at the left and right lower arm bolt joints.
15. Pull the lower arms downward to separate them from the knuckles.

Note
Do not damage the ball-joint dust boots.

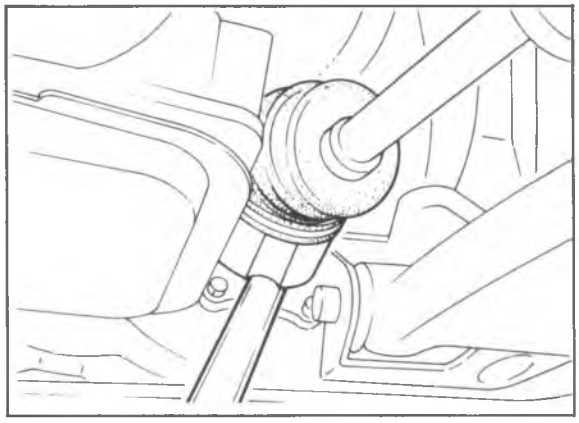

86U07A-025

16. Separate the left driveshaft from the transaxle by prying with a bar inserted between the shaft and the case.

Note
Do not damage the oil seal.

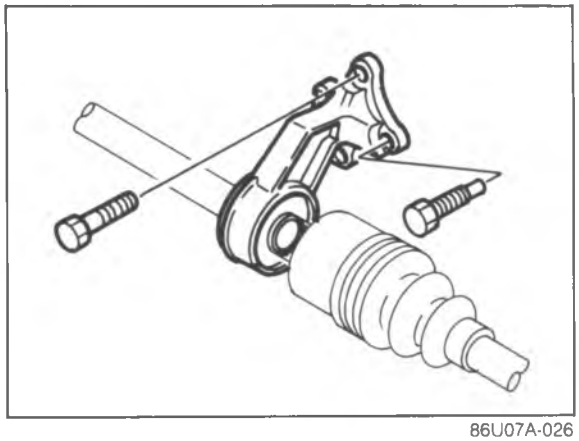

86U07A-026

17. Remove the joint shaft bracket.
18. Separate the right driveshaft together with the joint shaft in the same manner.

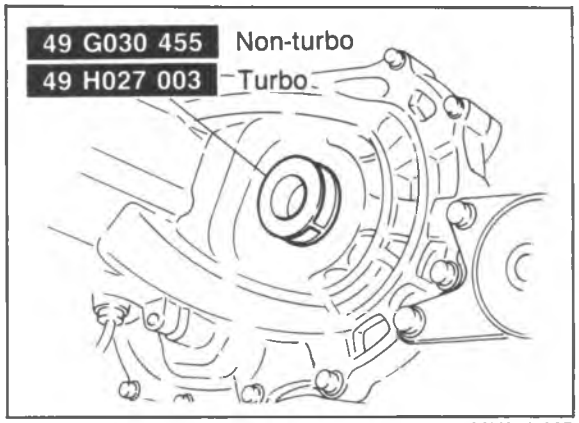

86U07A-027

19. Install the **SST** to the differential side gear.

Note
Failure to install the SST may cause the differential side gears to become mispositioned.

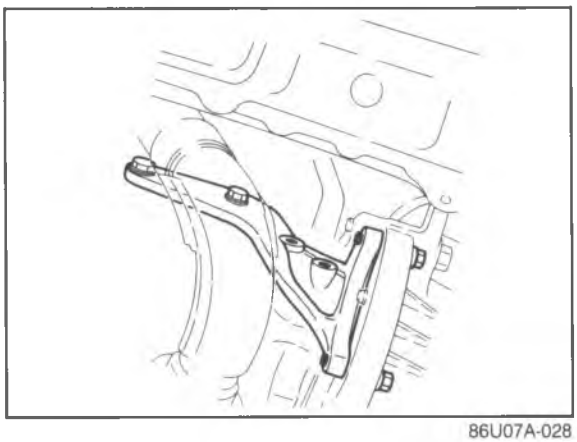
86U07A-028

20. Remove the gusset plates.
21. Remove the under cover.
22. Remove the extension bar and the control rod.

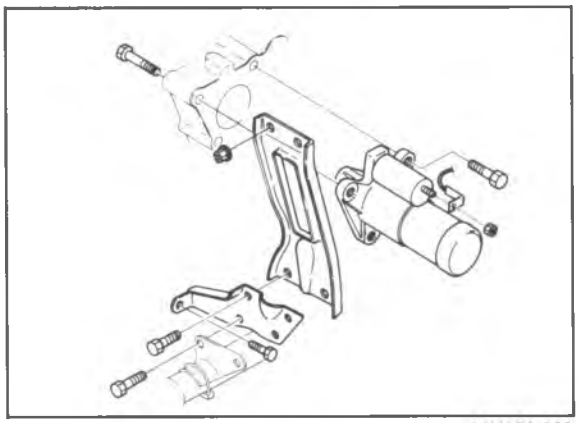
86U07A-029

23. Remove the surge tank bracket.
24. Remove the starter.

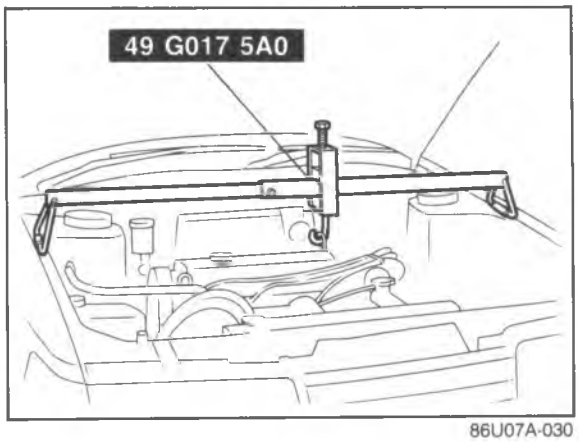

86U07A-030

25. Suspend the engine with the **SST**.

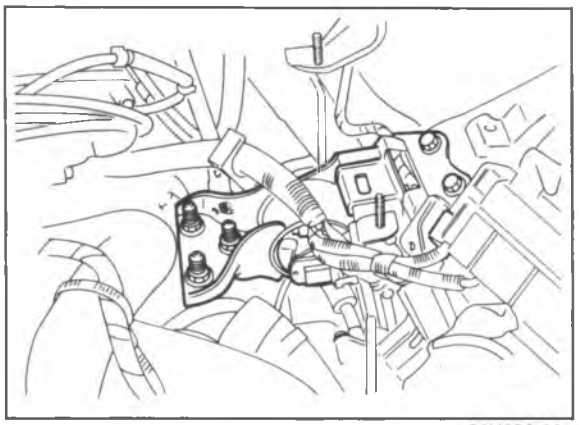

86U07A-031

26. Remove the engine mount No. 4 and bracket.

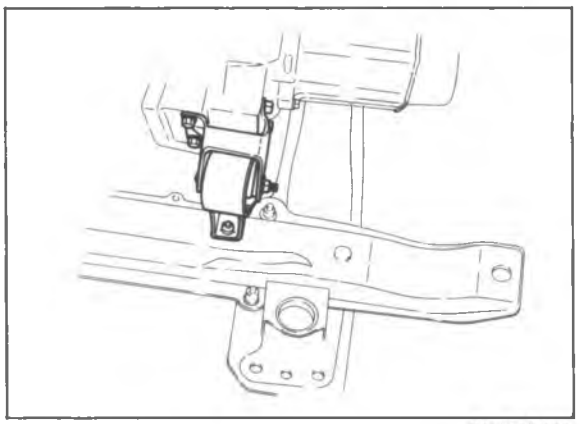

86U07A-032

27. Remove the engine mount No. 2.

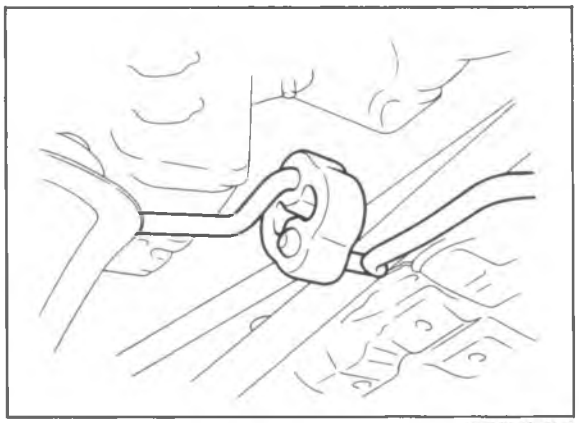

86U07A-033

28. Disconnect the hanger rubber then remove the crossmember and the left side lower arm as an assembly.

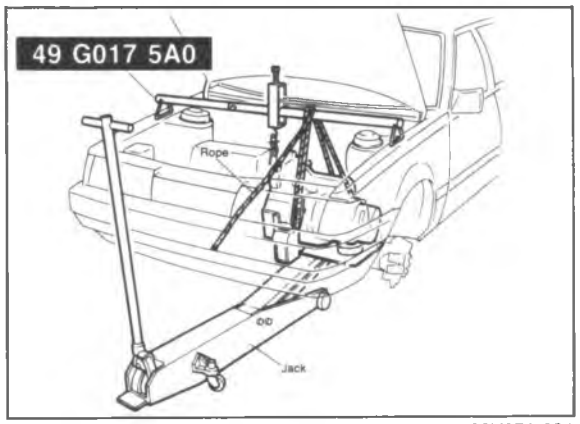

86U07A-034

29. Lean the engine toward the transaxle.
30. Support the transaxle with a jack.
31. Remove the remaining transaxle mounting bolts.
32. Remove the transaxle.

New G-type MTX (Non-Turbo)

DISASSEMBLY

STEP 1

Disassemble in the sequence shown in the figure referring to the disassembly note for the specially marked parts.

86U07A-035

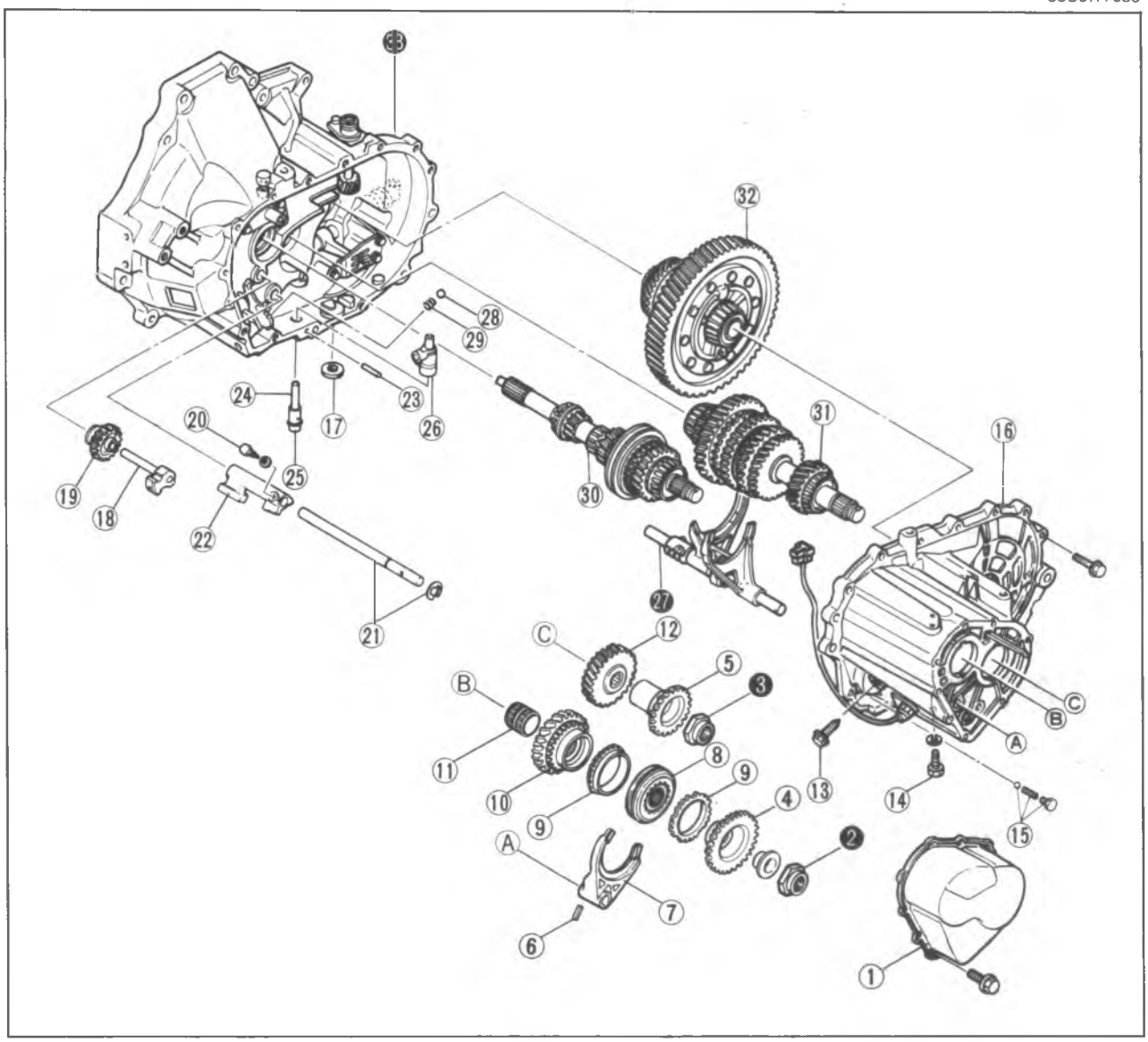

86U07A-036

1. Rear cover
2. Lock nut
3. Lock nut
4. Primary reverse synchronizer gear
5. Secondary reverse synchronizer gear
6. Spring pin
7. Shift fork
8. Clutch hub assembly
9. Synchronizer ring
10. 5th gear
11. Gear sleeve
12. Secondary 5th gear
13. Lock bolt
14. Guide bolt
15. Lock bolt, and ball and spring
16. Transaxle case assembly
17. Magnet
18. Reverse idle shaft
19. Reverse idle gear
20. Lock bolt
21. Shift rod (5th and reverse) and clip
22. Gate
23. Pin
24. Crank lever shaft
25. "O" ring
26. Crank lever assembly
27. Shift fork and shift rod assembly
28. Steel ball
29. Spring
30. Primary shaft gear assembly
31. Secondary shaft gear assembly
32. Ring gear and differential assembly

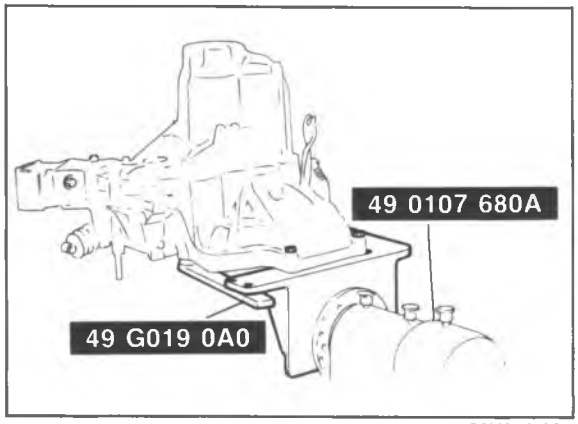

86U07A-037

Disassembly Note
Transaxle
Mount the transaxle on the **SST**.

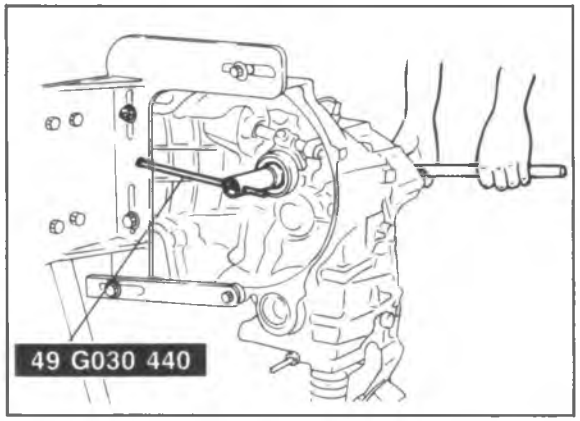

86U07A-038

Lock nut
1. Lock the primary shaft with the **SST**.
2. Shift to 1st or 2nd gear.
3. Remove the lock nut.

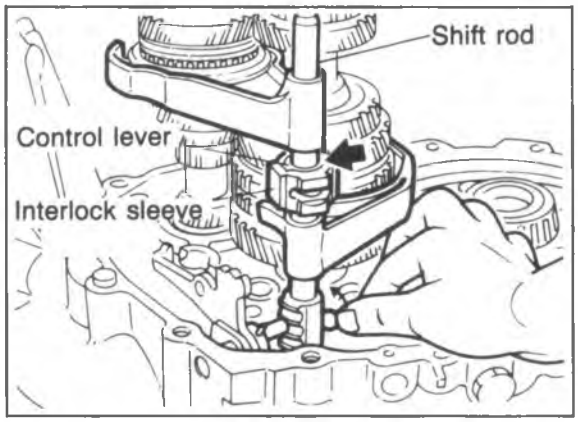

86U07A-039

Shift fork and shift rod assembly
1. Align the ends of the interlock sleeve and of the control lever, then turn the shift rod counter-clockwise.
2. While holding the 1st-2nd shift fork with one hand and the 3rd-4th shift fork with the other, raise them both at the same time and shift each of the clutch hub sleeves.

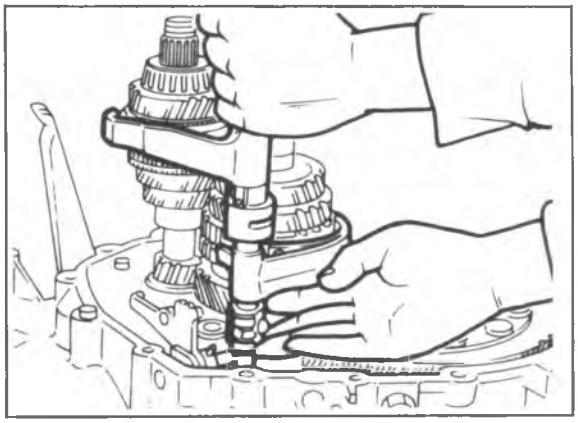
76U07A-227

3. Lift the control end and remove the steel ball, and, at the same time, remove the shift rod from the clutch housing.
4. Separate the shift rod and shift fork assembly from each of the clutch hub sleeves.

STEP 2

Disassemble in the sequence shown in the figure referring to the disassembly note for the specially marked parts.

86U07A-040

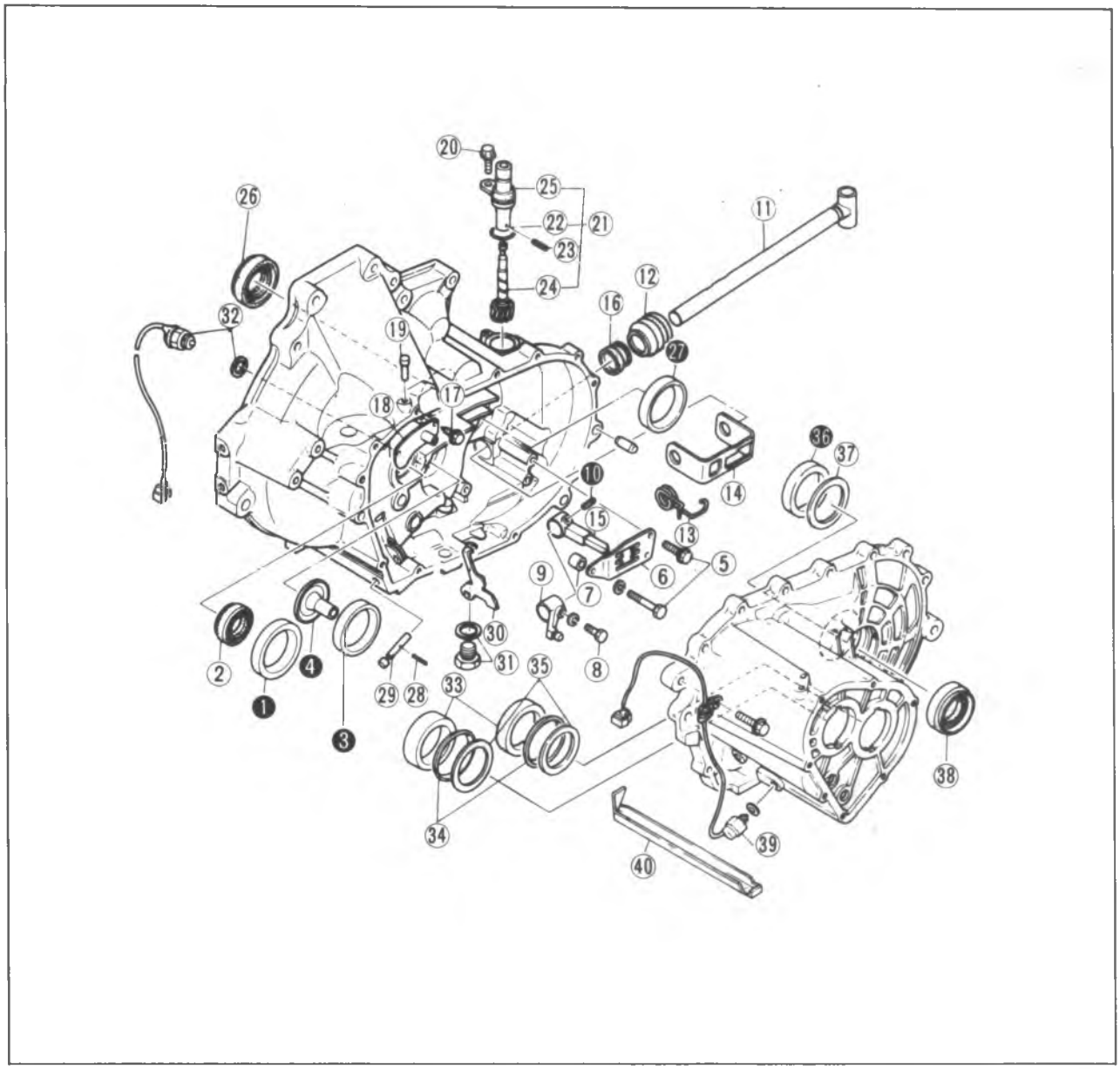

76U07A-229

1. Bearing outer race
2. Oil seal
3. Bearing outer race
4. Funnel
5. Bolts
6. Guide plate
7. Pipe
8. Bolt
9. Change arm
10. Spring pin
11. Change rod
12. Boot
13. Spring
14. Reverse gate
15. Selector
16. Oil seal
17. Bolts
18. Bleeder cover
19. Bleeder
20. Bolt
21. Speedometer driven gear assembly
22. "O" ring
23. Spring pin
24. Driven gear
25. Gear case
26. Oil seal
27. Bearing outer race
28. Spring pin
29. Reverse lever shaft
30. Reverse lever
31. Drain plug and washer
32. Neutral switch and gasket
33. Bearing outer race
34. Diaphragm spring
35. Adjust shim
36. Bearing outer race
37. Adjust shim
38. Oil seal
39. Back-up light switch
40. Oil passage

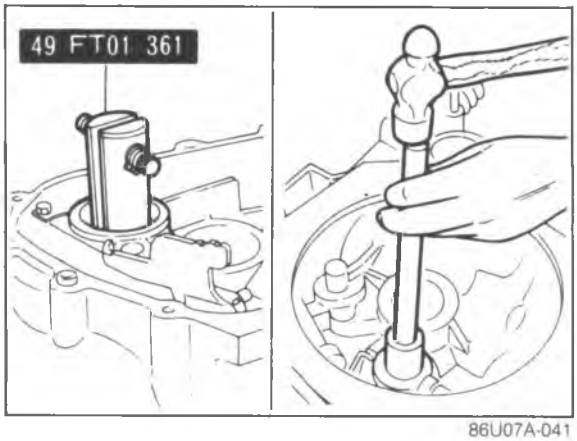

86U07A-041

Disassembly Note
Bearing outer race (primary shaft)
Remove the bearing outer race with the **SST**.

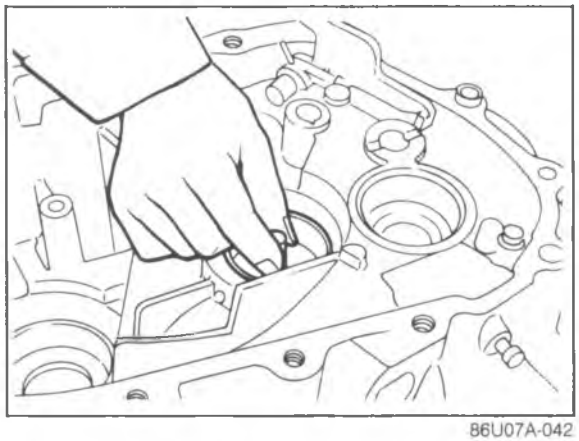
86U07A-042

Bearing outer race (secondary shaft)
Remove the bearing outer race by lifting out the funnel and race together.

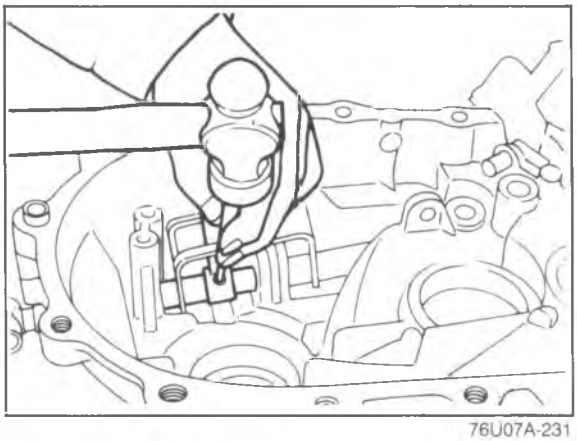
76U07A-231

Spring pin
Align the groove for removal of the clutch housing pin with the position of the spring pin, then tap the pin out using a pin punch.

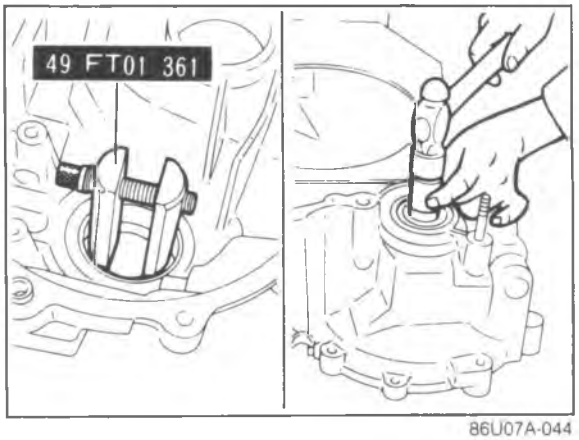

86U07A-044

Bearing outer race (differential)
Remove the bearing outer race with the **SST**.

STEP 3

Disassemble in the sequence shown in the figure, referring to the disassembly note for the specially marked parts.

Note

a) Replace the bearings with new ones whenever they are disassembled.

b) Before disassembly, check the thrust clearance of all gears. (Refer to page 7A—32.)

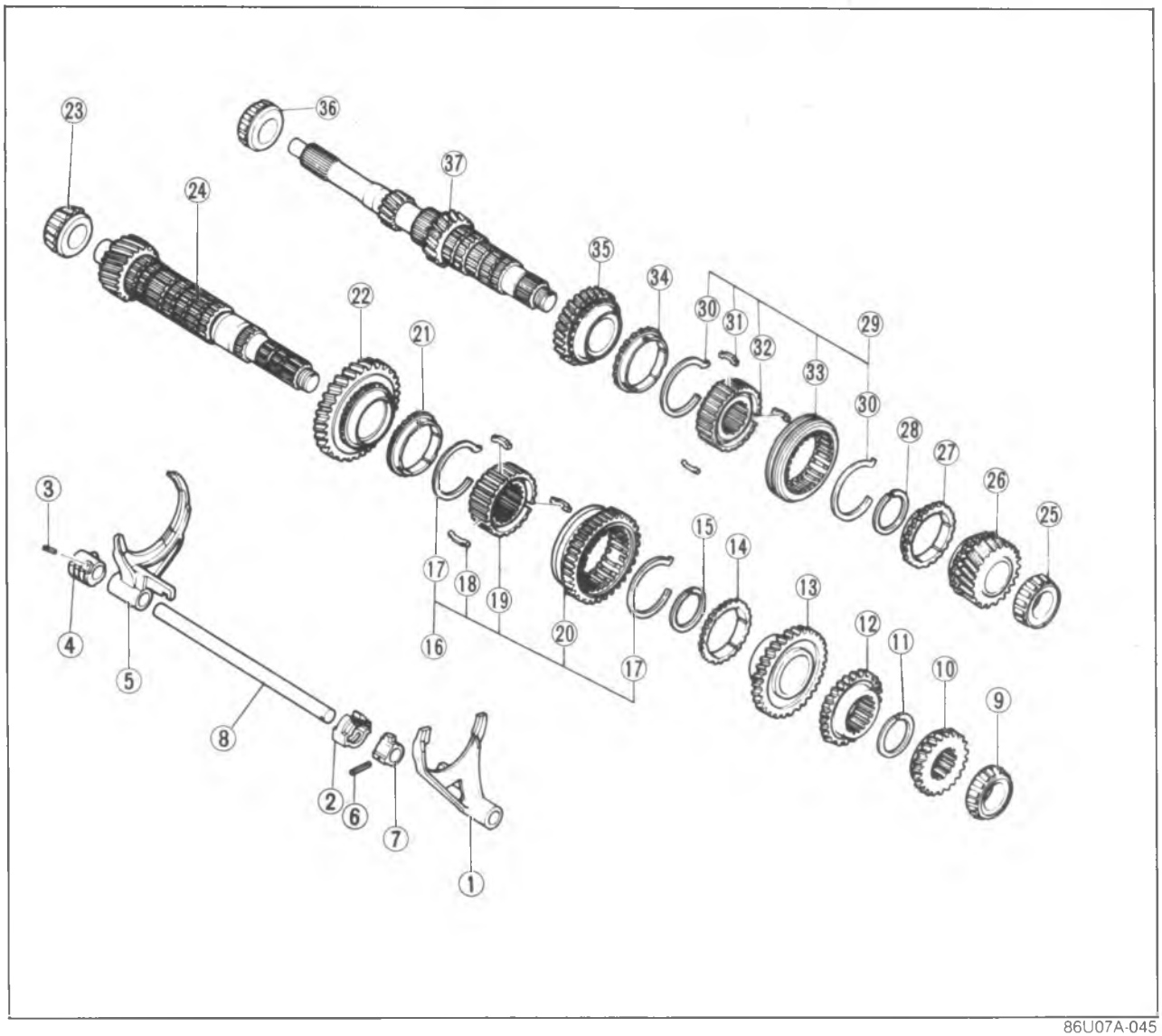

86U07A-045

1. Shift fork (3rd and 4th gears)
2. Interlock sleeve
3. Spring pin
4. Control end
5. Shift fork (1st and 2nd gears)
6. Spring pin
7. Control lever
8. Control rod
9. Bearing outer race
10. 4th gear
11. Retaining ring
12. 3rd gear
13. 2nd gear
14. Synchronizer ring
15. Retaining ring
16. Clutch hub assembly
17. Synchronizer spring
18. Synchronizer key
19. Clutch hub
20. Clutch hub sleeve (reverse gear)
21. Synchronizer ring
22. 1st gear
23. Bearing inner race
24. Secondary shaft
25. Bearing inner race
26. 4th gear
27. Synchronizer ring
28. Retaining ring
29. Clutch hub assembly (3rd and 4th gears)
30. Synchronizer spring
31. Synchronizer key
32. Clutch hub
33. Clutch hub sleeve
34. Synchronizer ring
35. 3rd gear
36. Bearing inner race
37. Primary shaft

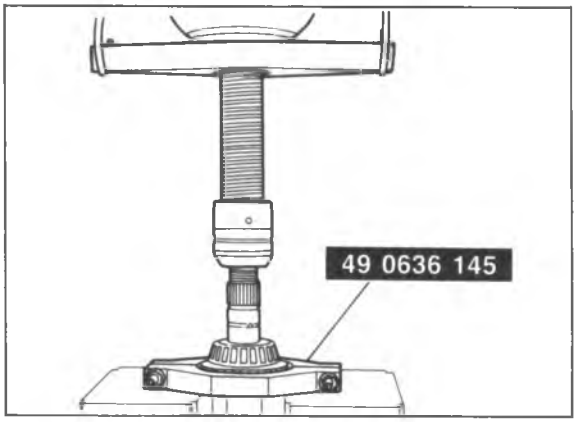

86U07A-046

Disassembly Note
Bearing inner race (secondary 4th gear end)
Remove the bearing inner race and secondary 2nd gear with the **SST**.

Caution
Hold the shaft with one hand so that it does not fall.

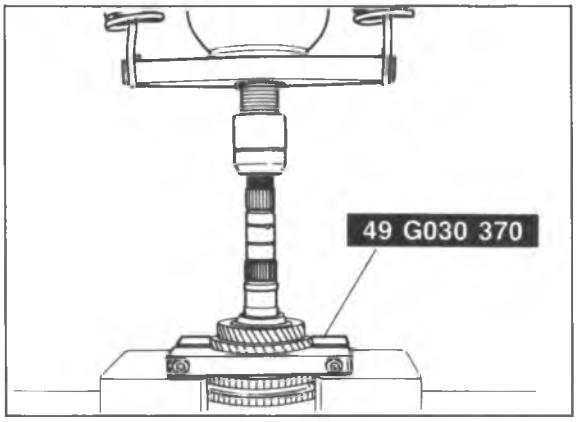

86U07A-047

Secondary 3rd gear and 2nd gear
1. Remove the retaining ring.
2. Shift the gears to 1st gear.
3. Remove the secondary 3rd gear and 2nd gear with the **SST**.

Caution
Hold the shaft with one hand so that it does not fall.

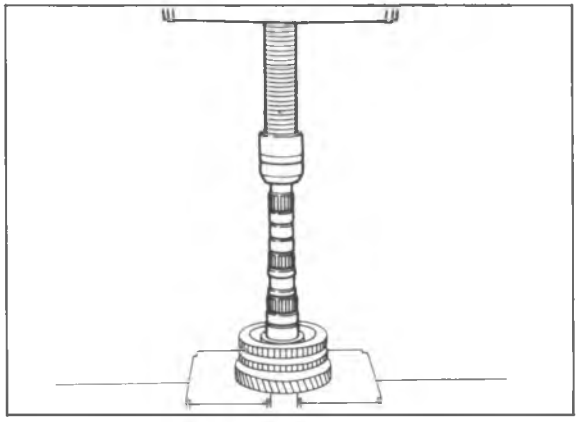
86U07A-048

1st gear
1. Remove the retaining ring.
2. Remove the clutch hub assembly (reverse gear) and 1st gear as shown in the figure.

Caution
Hold the shaft with one hand so that it does not fall.

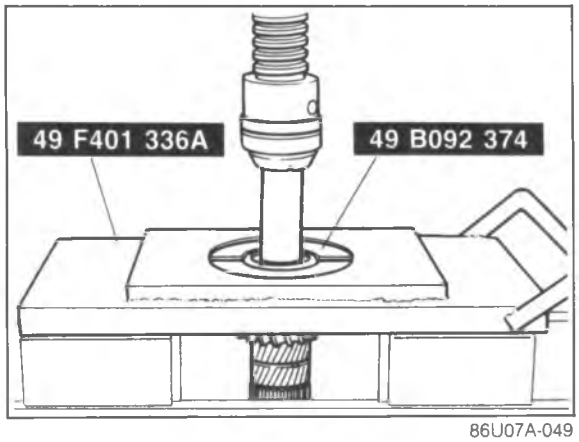

86U07A-049

Bearing inner race (secondary shaft end)
Remove the bearing inner race with the **SST**.

Caution
Hold the shaft with one hand so that it does not fall.

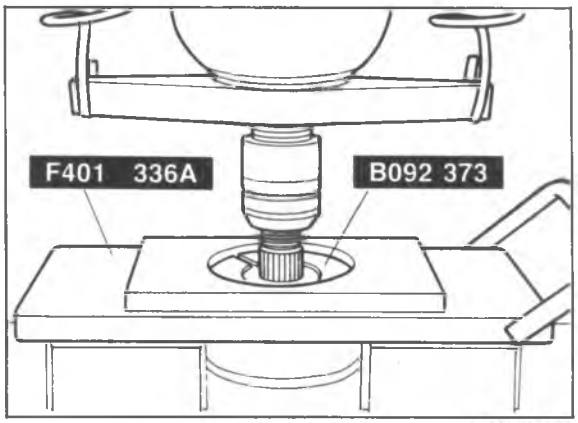

86U07A-050

Bearing inner race (4th gear end)
1. Remove the retaining ring.
2. Remove the bearing inner race with the **SST**.

Caution
Hold the shaft with one hand so that it does not fall.

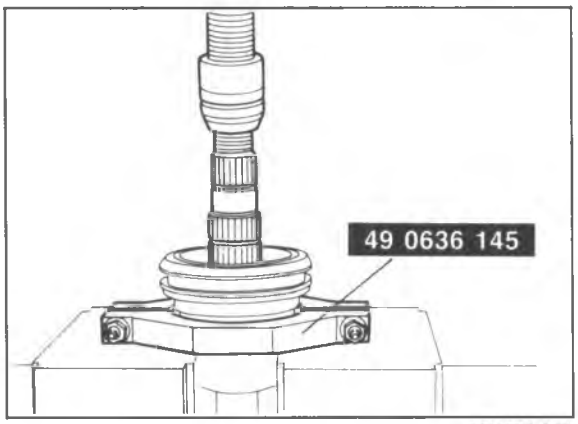

86U07A-051

Clutch hub assembly (3rd/4th)
1. Remove the retaining ring.
2. Remove the clutch hub assembly with the **SST**.

Caution
Hold the shaft with one hand so that it does not fall.

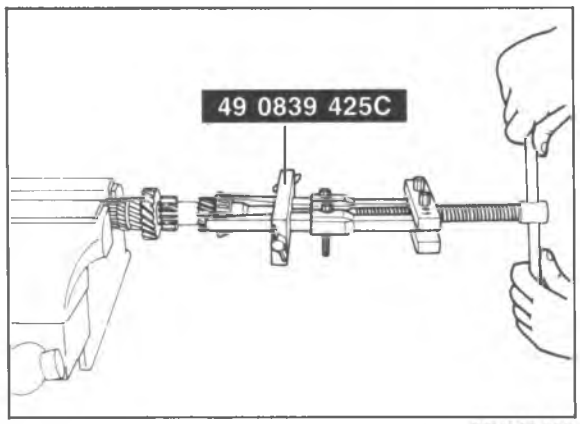

86U07A-052

Bearing inner race (primary shaft end)
Remove the bearing inner race with the **SST**.

Caution
Hold the shaft with one hand so that it does not fall.

STEP 4 (DIFFERENTIAL)

Disassemble in the sequence shown in the figure referring to disassembly note for the specially marked parts.

Note

a) If the bearing inner races are removed replace them with new ones.

b) Before disassembly, check the backlash of the side gears and pinion gears. (Refer to page 7A—29)

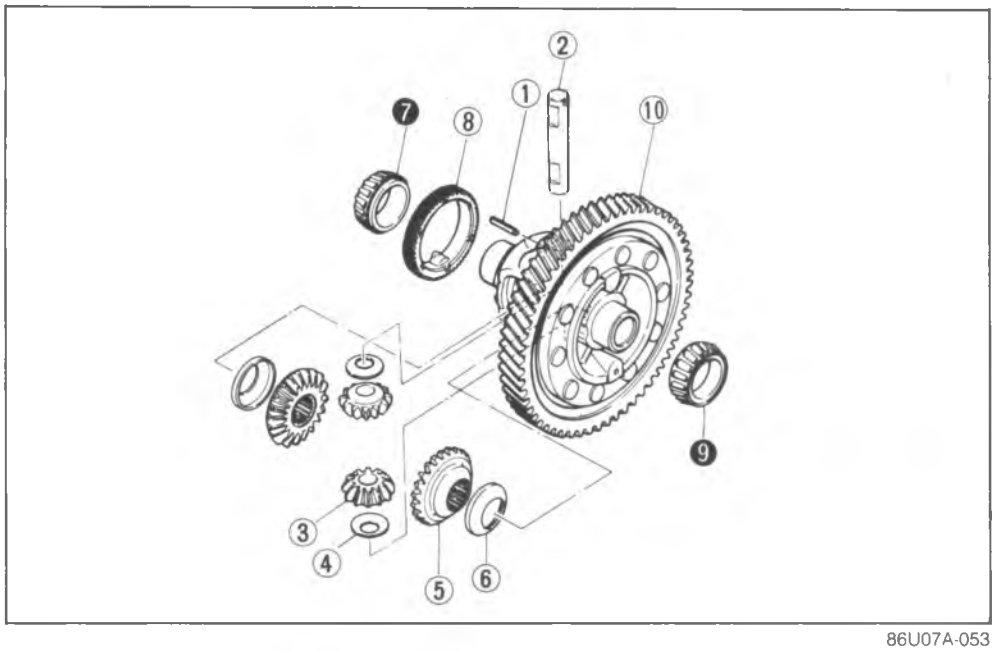

86U07A-053

1. Knock pin
2. Pinion shaft
3. Pinion gear
4. Thrust washer
5. Side gear
6. Thrust washer
7. Side bearing inner race
8. Speedometer drive gear
9. Side bearing inner race
10. Gear case

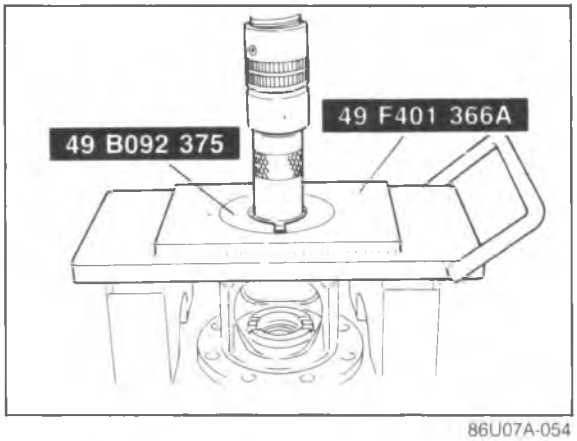

86U07A-054

Side bearing inner race (side opposite ring gear)

Remove the race from the gear case with the **SST**.

Caution

Hold the gear case with one hand so that it does not fall.

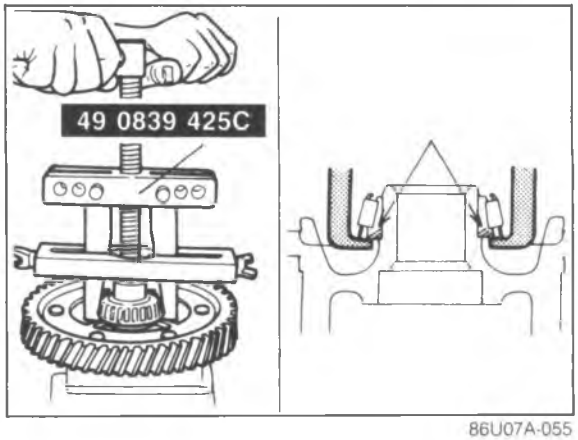

86U07A-055

Side bearing inner race (ring gear side)

Remove the race with a combination of parts from the **SST**.

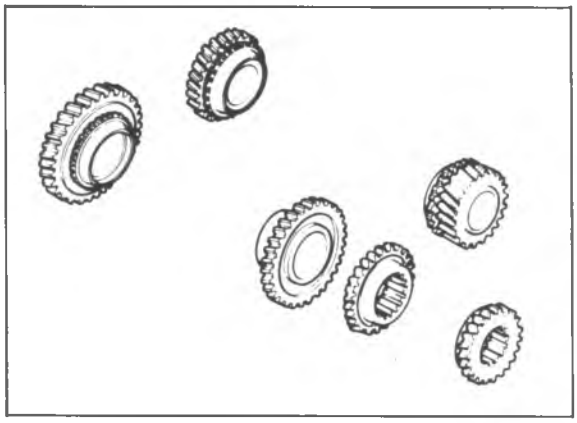

63U07A-064

INSPECTION

Check the following parts, and replace if necessary.

1st, 2nd, 3rd, 4th, and 5th gears
1. Worn or damaged synchronizer cone.
2. Worn or damaged hub sleeve coupling.
3. Worn or damaged teeth.
4. Worn or damaged inner surface or end surface of gears.

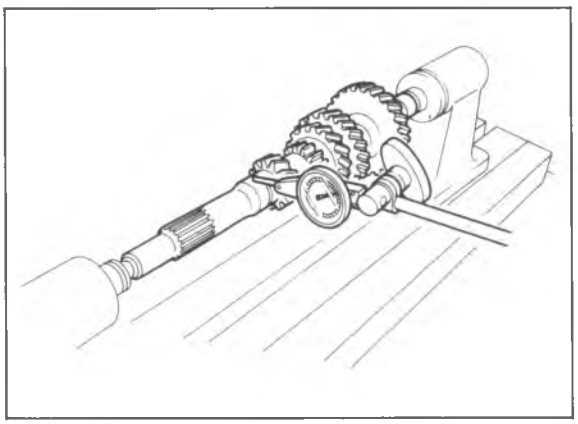

86U07A-056

Primary Shaft Gear and Primary Gear
1. Worn teeth
2. Primary shaft gear run-out

Run-out: 0.05 mm (0.002 in) max.

Note
If the shaft gear is replaced, adjust the bearing preload. (Refer to page 7A—36)

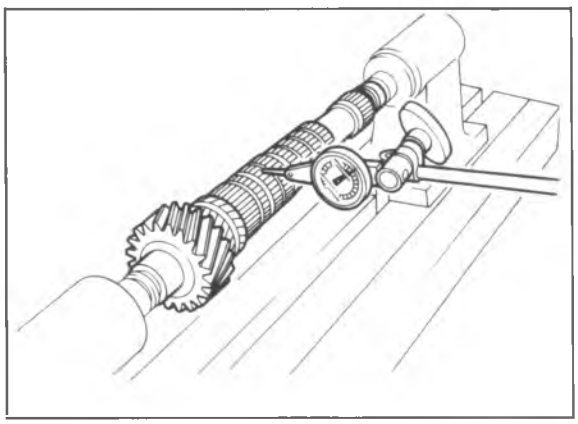

63U07A-068

Secondary Shaft Gear
1. Worn or damaged gear contact surface.
2. Worn or damaged splines.
3. Worn teeth.
4. Clogged oil passage.
5. Secondary shaft gear run-out.

Standard run-out: 0.015 mm (0.0006 in)

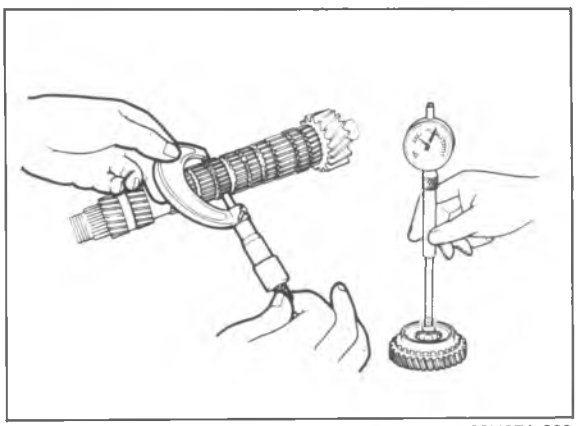

63U07A-069

6. Oil clearance between secondary gear shaft and gears.

Standard: 0.03—0.08 mm (0.001—0.003 in)

Caution
If the shaft gear is replaced, adjust the bearing preload.

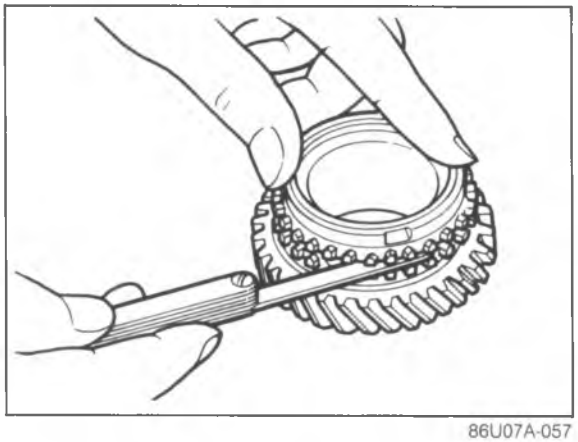

86U07A-057

Synchronizer Ring
1. Engagement with gear
2. Worn or damaged teeth
3. Worn or damaged tapered surface
4. Clearance from side of gear

Clearance: 1.5 mm (0.059 in)
Minimum: 0.8 mm (0.031 in)

Note
a) Press the synchronizer ring uniformly against the gear and measure around the circumference.
b) If the clearance is less than specified, replace the synchronizer ring or gear.

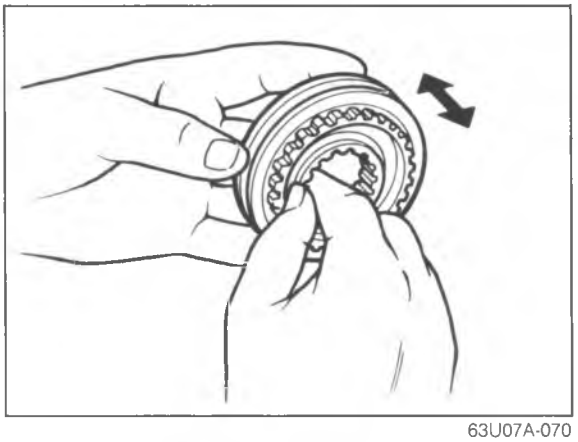

63U07A-070

Clutch Hub
1. Worn or damaged splines.
2. Worn or damaged synchronizer key groove.
3. Worn end surface.
4. Operation of the hub sleeve when it is installed.

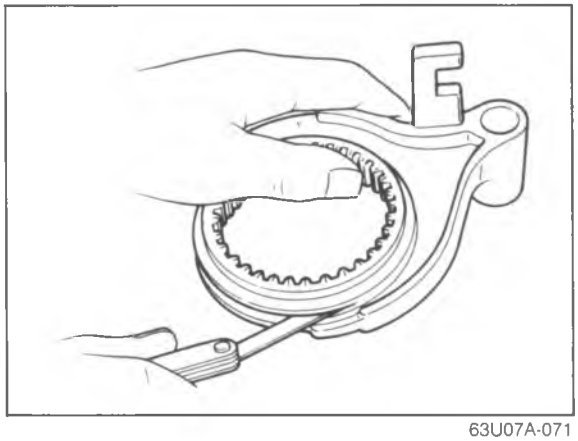

63U07A-071

Clutch Hub Sleeve
1. Worn or damaged hub splines.
2. Worn or damaged sleeve fork groove.
3. Clearance between sleeve and shift fork.

Standard: 0.2—0.458 mm (0.008—0.018 in)
Limit: 0.5 mm (0.020 in)

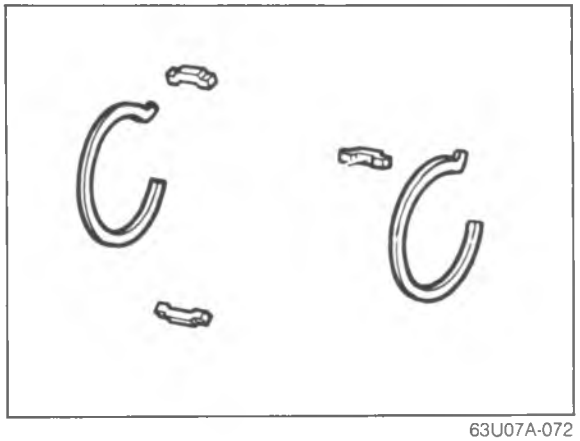

63U07A-072

Synchronizer Key and Spring
1. Worn key.
2. Bent spring.

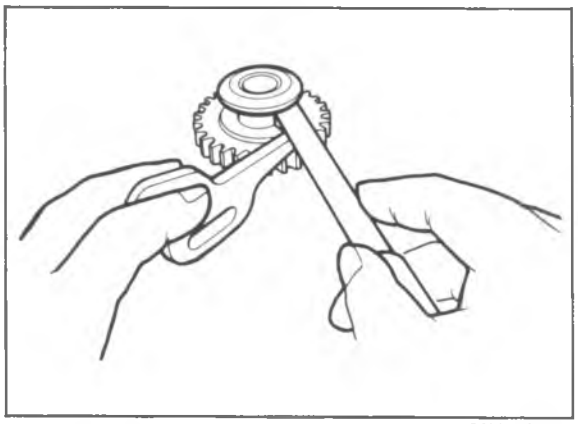

86U07A-058

Reverse idle Gear
1. Worn or damaged bushing.
2. Worn or damaged teeth.
3. Worn or damaged release lever coupling groove.
4. Clearance between sleeve and reverse lever.

Standard: 0.095—0.318 mm (0.004—0.013 in)
Maximum: 0.5 mm (0.020 in)

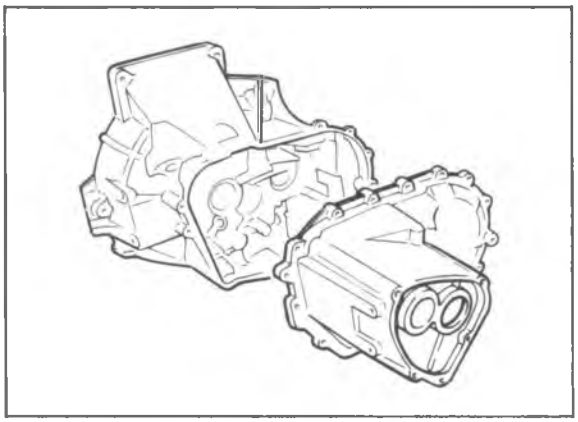

63U07A-074

Clutch Housing, Transaxle Case, Rear Cover, and Differential Gear Case
Cracks or damage.

Caution
If the clutch housing, transaxle case, or differential gear case is replaced, adjust the bearing preload of the shaft gears and the preload of the differential side bearings.

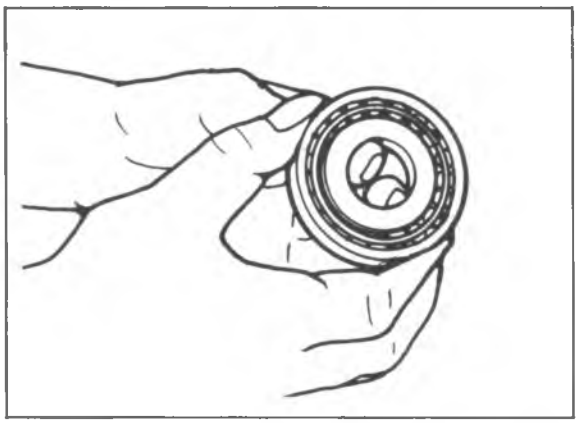

63U07A-075

Bearing
1. Roughness or noise while turning
2. Worn or damaged outer race or rollers

Caution
a) Replace the bearing, the outer race, and the inner race as a unit.
b) If the bearing is replaced, adjust the preload.

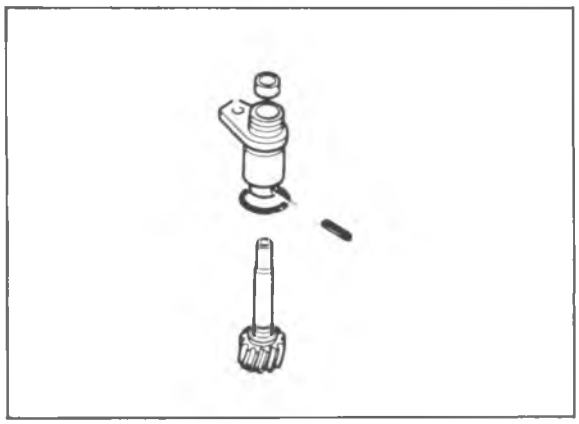

63U07A-076

Speedometer Driven Gear Assembly
1. Worn or damaged teeth.
2. Worn or damaged O-ring.

Ring Gear Speedometer Drive Gear
Worn or damaged teeth.

Oil Seal
Damaged or worn lip.

ASSEMBLY

Note
a) Wash all parts.
b) Apply oil to all friction surfaces.
c) Use new roll pins and retaining rings.

STEP 1 (DIFFERENTIAL)

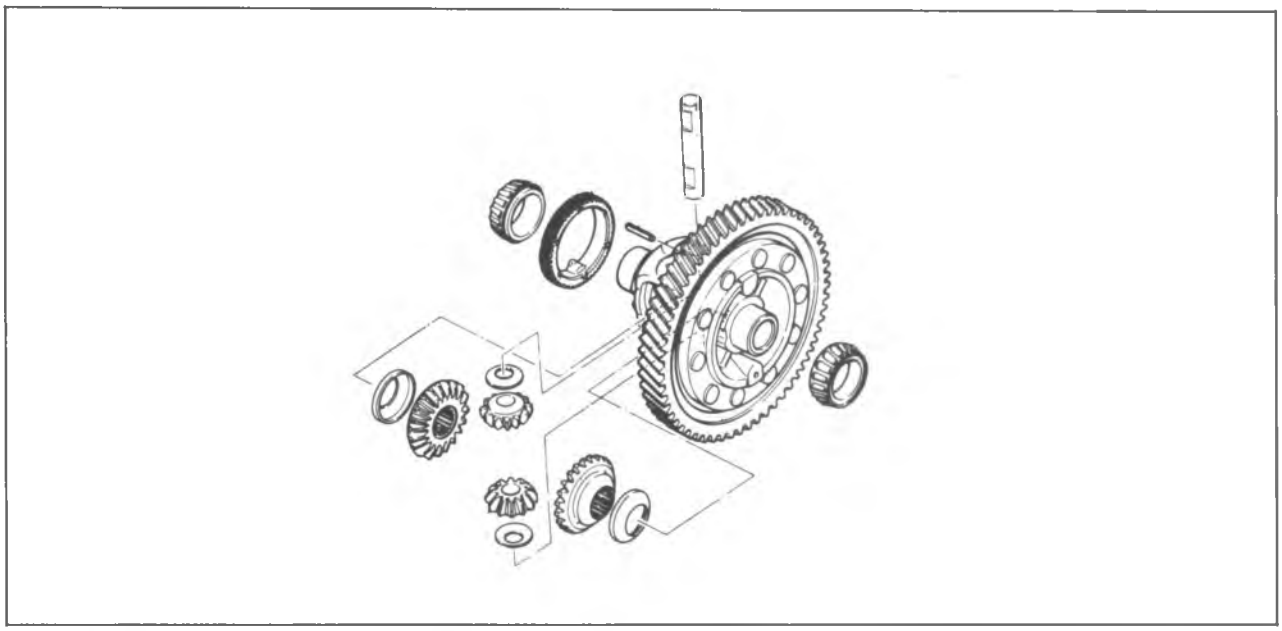

86U07A-059

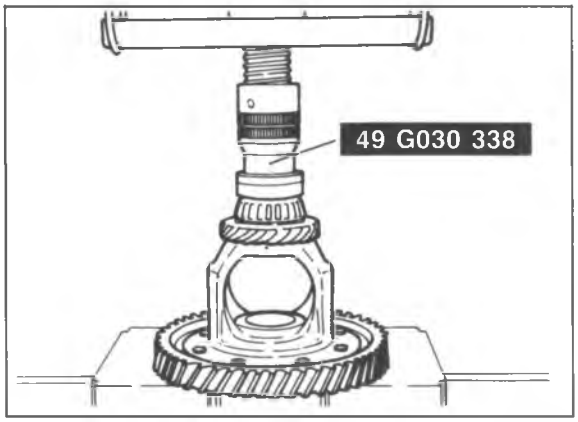

86U07A-060

Assembly

1. Install the speedometer drive gear and the new bearing inner race with the **SST**.

   Note
   Press to 19,620 N (2,000 kg, 4,400 lb).

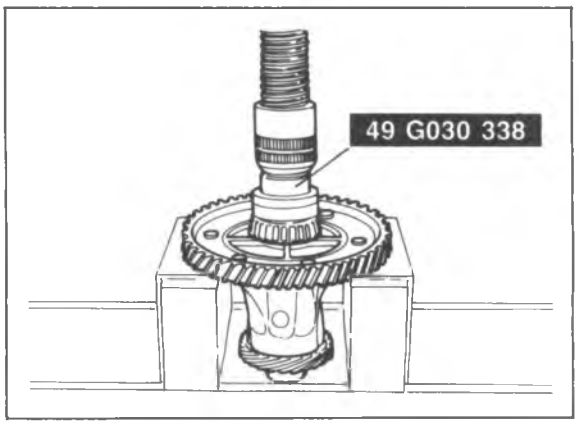

86U07A-061

2. Install the new bearing inner race with the **SST**.

   Note
   Press to 19,620 N (2,000 kg, 4,400 lb).

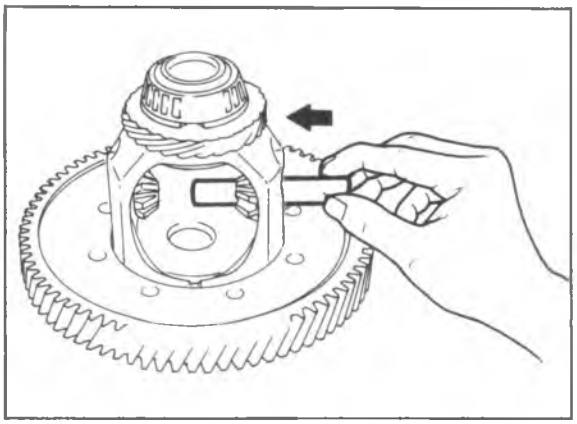

86U07A-062

3. Install the thrust washers and pinion gears.
4. Install the pinion shaft.

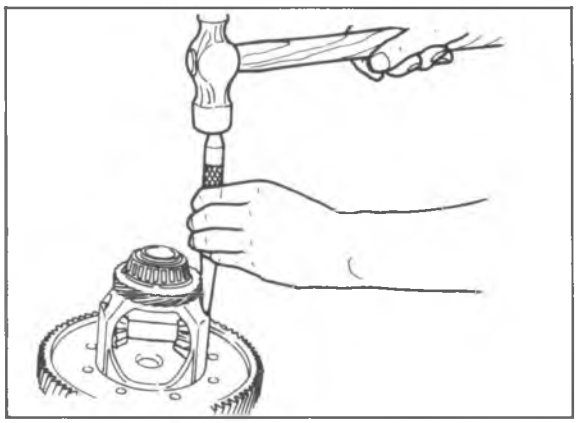

86U07A-063

5. Install the knock pin, then crimp it so that it cannot come out of the gear case.
6. Install the thrust washers and the side gears.

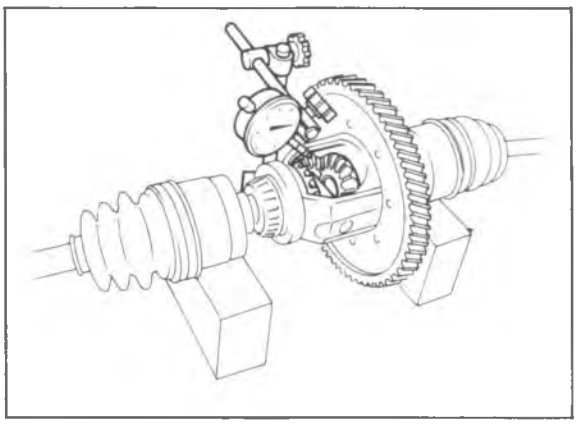

86U07A-064

Check and adjust using the following procedure.

7. Install the left and right driveshafts in the differential assembly.
8. Support the driveshafts on V-blocks as shown in the figure.
9. Measure the backlash of both pinion gears.

Backlash: 0—0.1 mm (0—0.004 in)

Identification mark	Thickness
0	2.0 mm (0.079 in)
1	2.1 mm (0.083 in)
2	2.2 mm (0.087 in)

86U07A-065

10. If the backlash is more than specified, adjust by selecting thrust washers from the table and install them between the case and side gears.

Note
Use the same thickness thrust washer on each side.

STEP 2

Note
During assembly, check the thrust clearance of each gear. (Refer to page 7A—32)

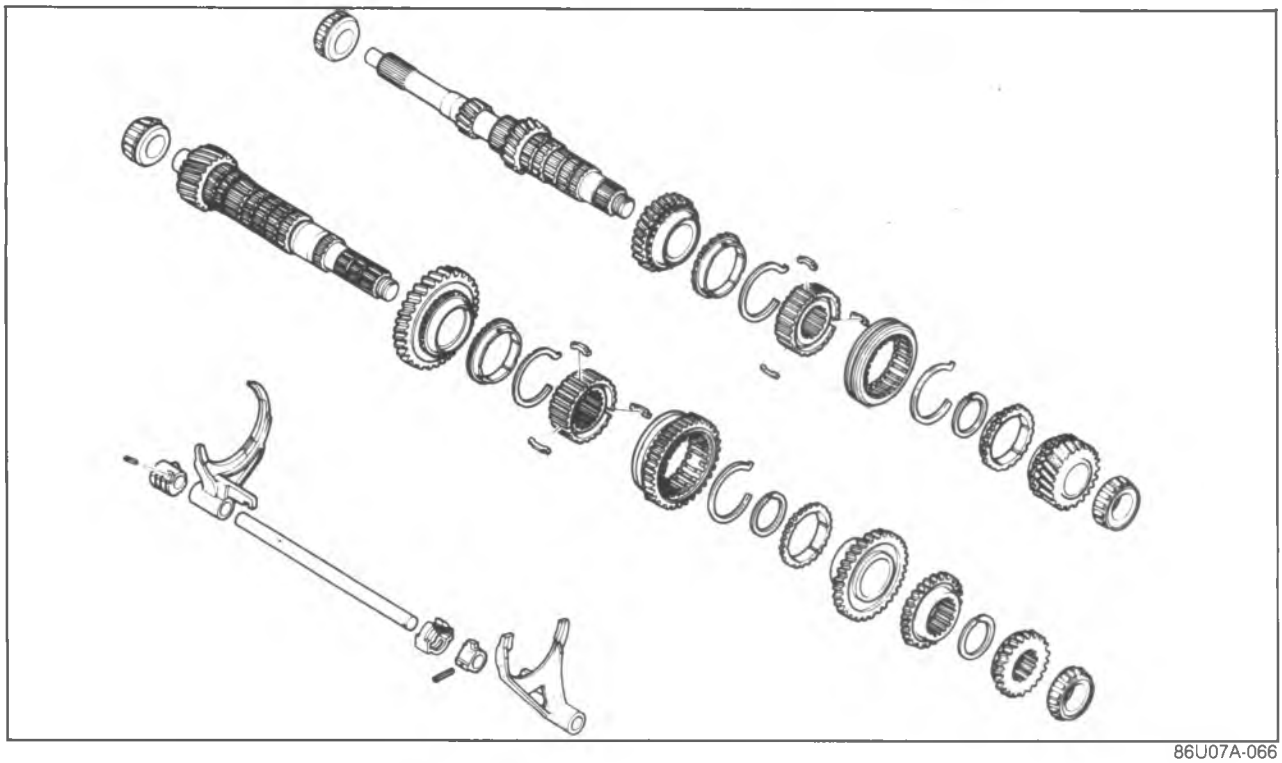

86U07A-066

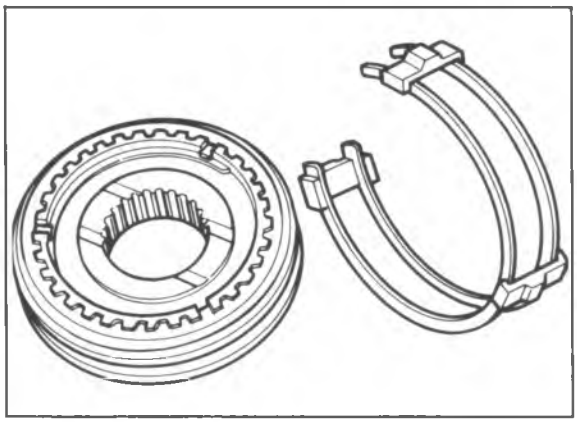

86U07A-067

Assembly
Install the synchronizer key spring in the clutch hub with the hook in the groove. This holds the three synchronizer keys in place.

Note
a) The sizes of the synchronizer keys are different.

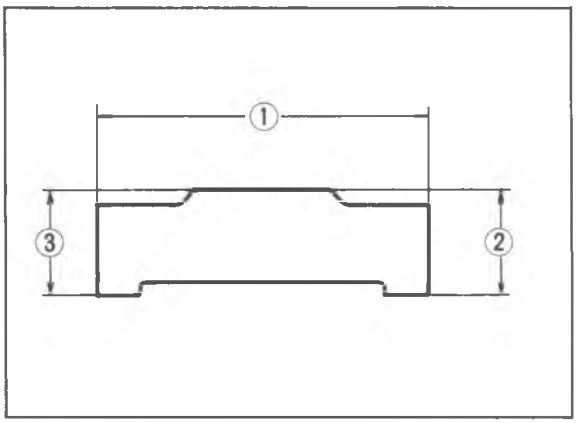

86U07A-068

Specification: mm (in)

	①	②	③
1st/2nd	19 (0.7480)	4.25 (0.1673)	4.25 (0.1673)
3rd/4th 5th/Rev.	17 (0.6693)	4.25 (0.1673)	4.25 (0.1673)

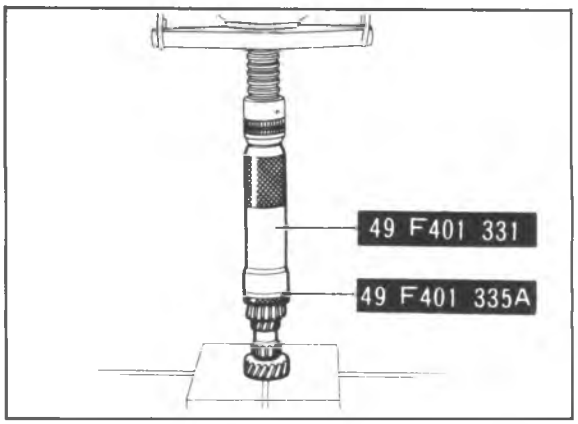

86U07A-069

Primary Shaft

1. Install the new bearing inner race with the **SST**.

Note
Press to 19,620 N (2,000 kg, 4,400 lb).

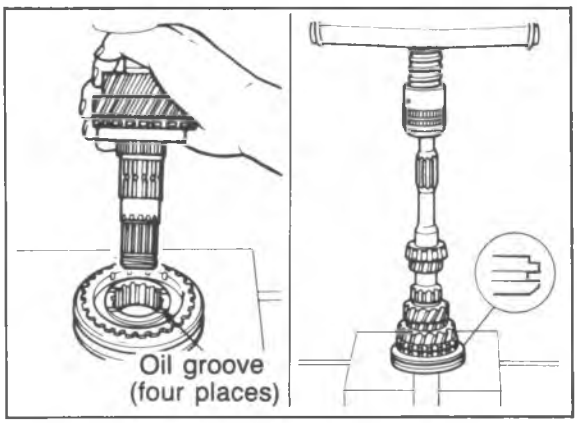

86U07A-070

2. Install the 3rd gear, synchronizer ring, and clutch hub assembly with the **SST**.

Note
a) Press to 19,620 N (2,000 kg, 4,400 lb).
b) Align the synchronizer ring groove and clutch housing hub key when installing.

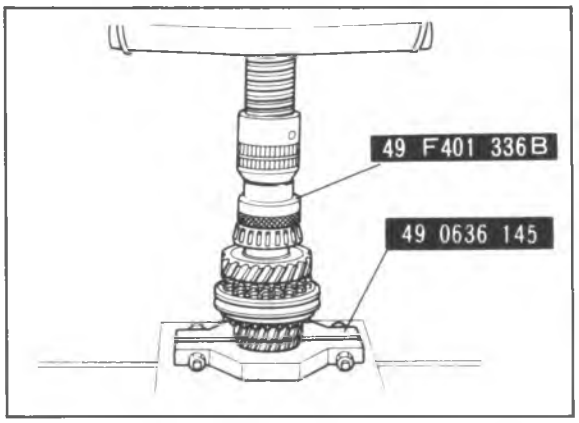

86U07A-071

3. Install the retaining ring.
4. Install the synchronizer ring, 4nd gear, and bearing inner race with the **SST**.

Note
Press to 19,620 N (2,000 kg, 4,400 lb).

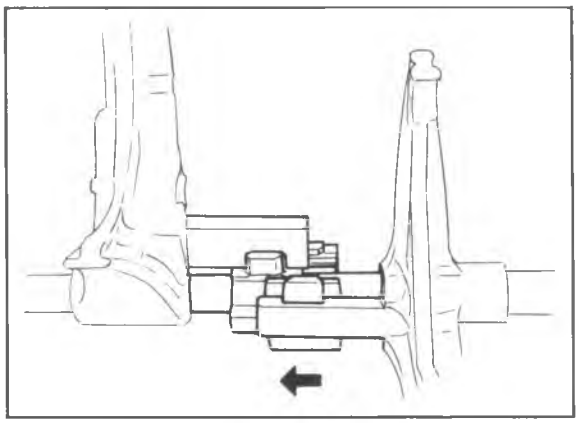
86U07A-072

5. Install both shift forks and the interlock sleeve, as in the figure.

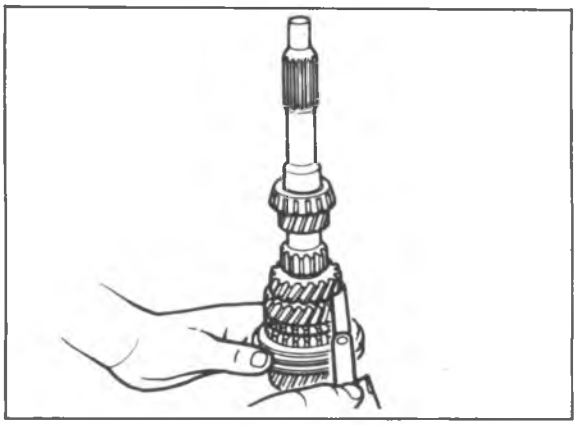

86U07A-073

6. Measure the clearance between the 3rd gear and 2nd gear.

Clearance: 0.05—0.20 mm (0.0020—0.0079 in)
Maximum: 0.25 mm (0.0098 in)

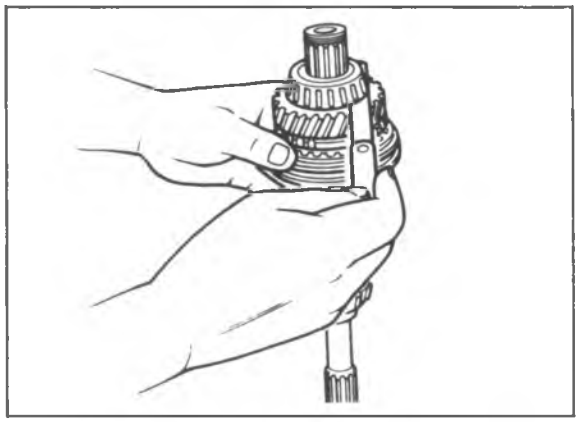

86U07A-074

7. Measure the clearance between the 4th gear and bearing inner race.

Clearance: 0.165—0.365 mm (0.0064—0.0144 in)
Maximum: 0.415 mm (0.0163 in)

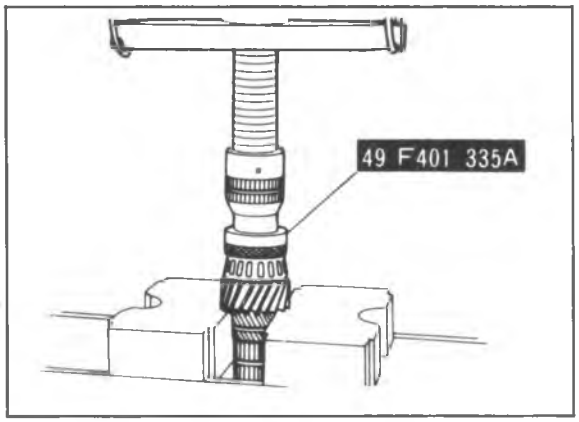

86U07A-075

8. Install the new bearing, inner race with the **SST**.

Note
Press to 19,620 N (2,000 kg, 4,400 lb).

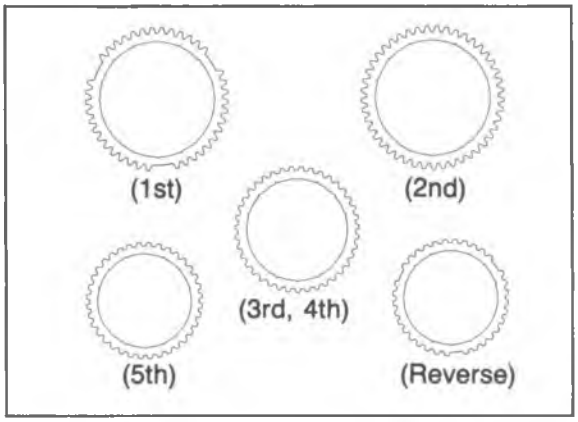

86U07A-076

Note
The styles and sizes of synchronizer rings are different as shown in the illustration.

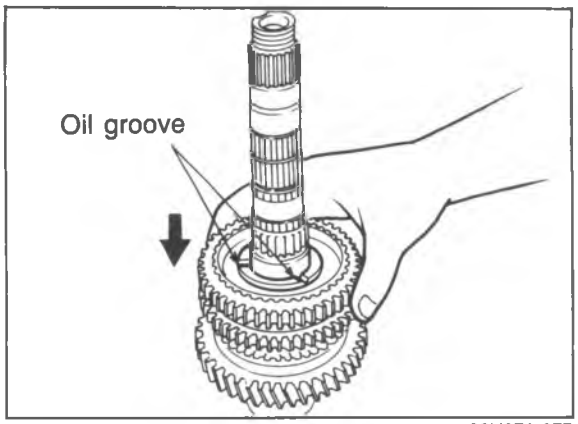

86U07A-077

Secondary Shaft

1. Assemble the 1st gear, synchronizer ring, and clutch hub assembly (reverse gear), as shown in the figure.

Note
Align the synchronizer ring, groove and clutch housing hub key when installing.

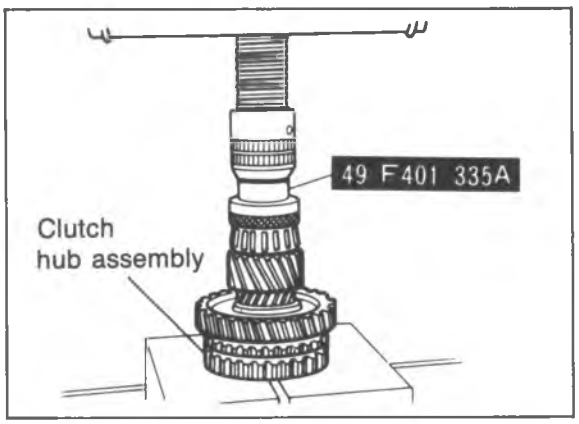

86U07A-078

2. Press on the clutch hub assembly (reverse gear) with the **SST**.

Note
Press to 19,620 N (2,000 kg, 4,400 lb).

3. Install the retaining ring.

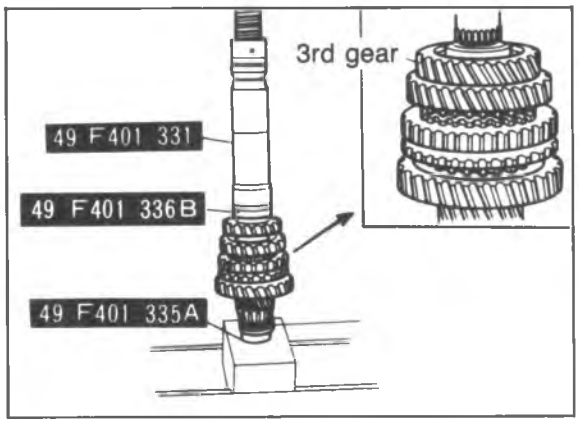

86U07A-079

4. Install the synchronizer ring and 2nd gear.
5. Install the secondary 3rd gear with the **SST**.

Note
Press to 19,620 N (2,000 kg, 4,400 lb).

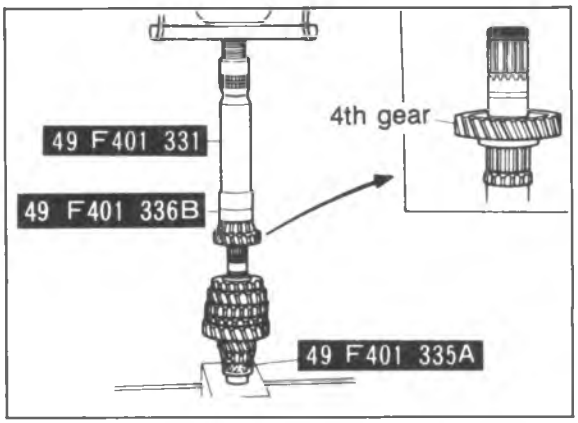

86U07A-080

6. Install the retaining ring.
7. Install the secondary 4th gear and new bearing inner race.

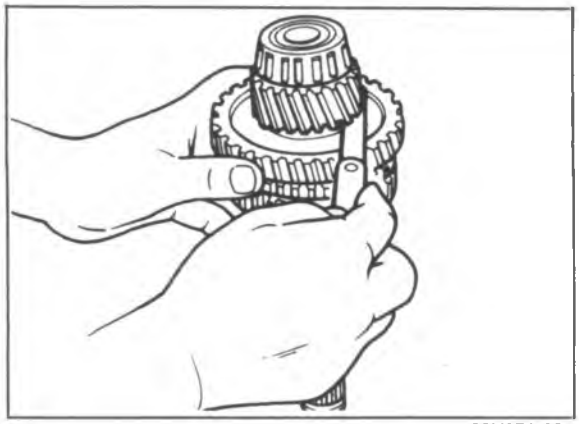

86U07A-081

8. Measure the clearance between the 1st gear and differential drive gear.

   Clearance: 0.05—0.28 mm (0.0020—0.0110 in)
   Maximum: 0.33 mm (0.0199 in)

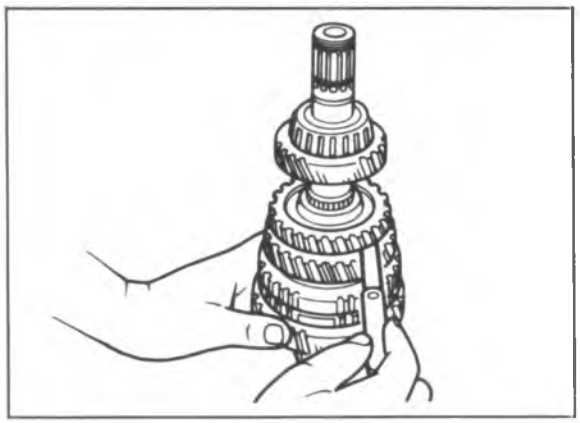

86U07A-082

9. Measure the clearance between the 2nd gear and secondary 3rd gear.

   Clearance: 0.175—0.455 mm (0.0069—0.0179 in)
   Maximum: 0.505 mm (0.0199 in)

STEP 3

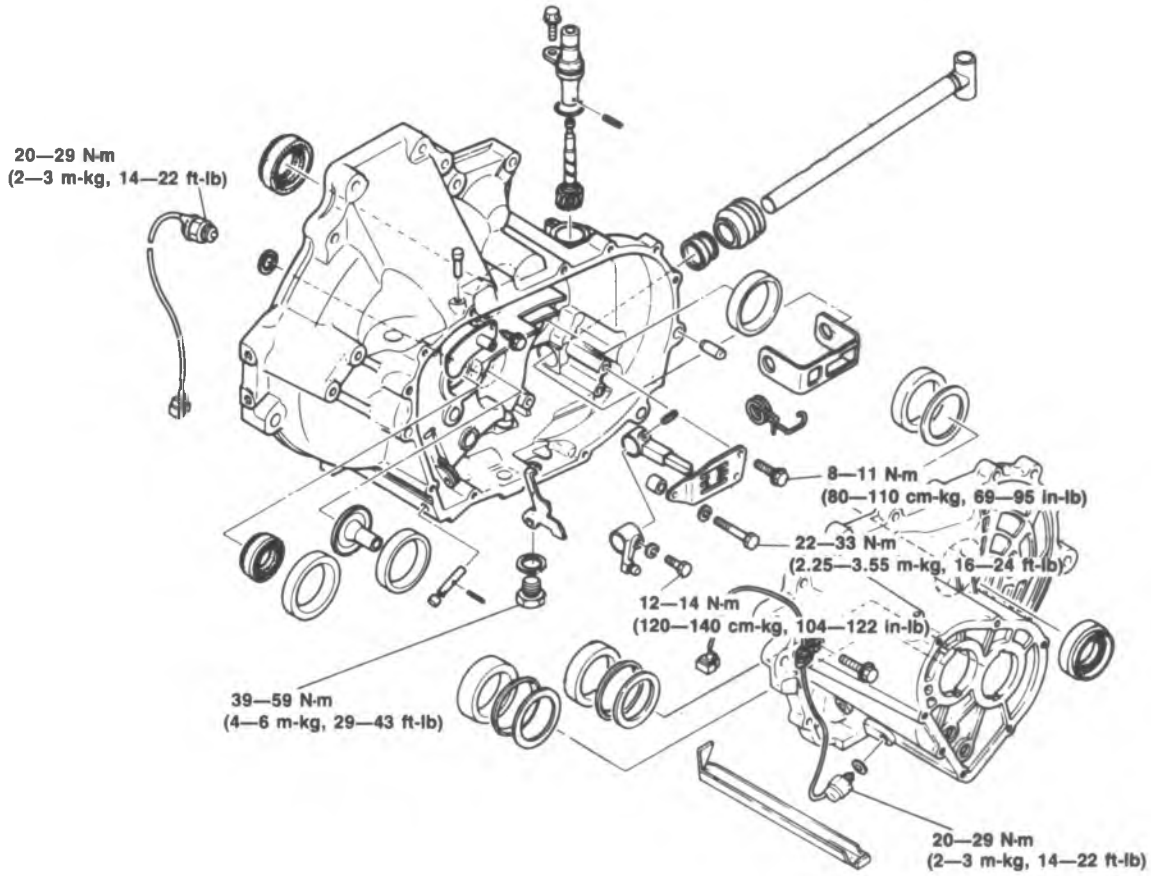

86U07A-083

Bearing Preload

Adjust the bearing preload by selecting adjust shim(s).

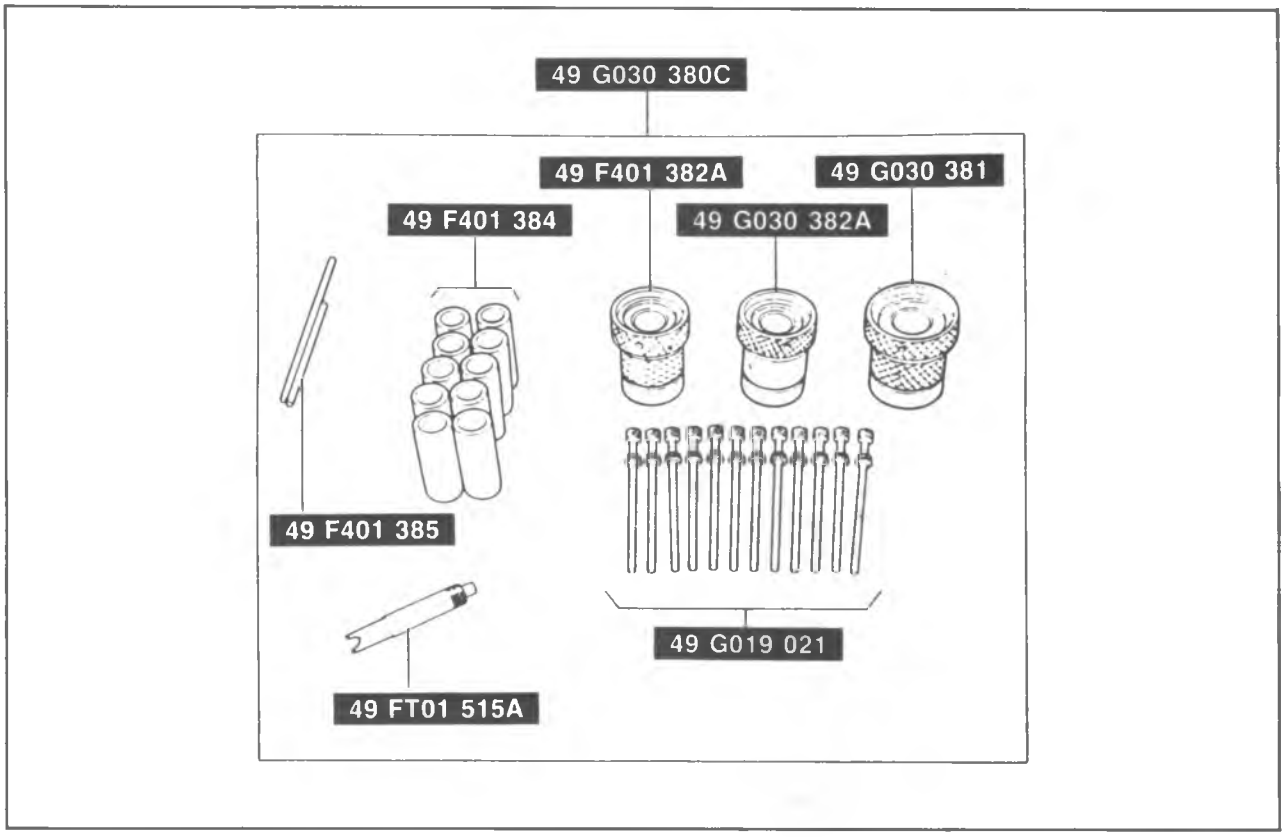

83U07A-099

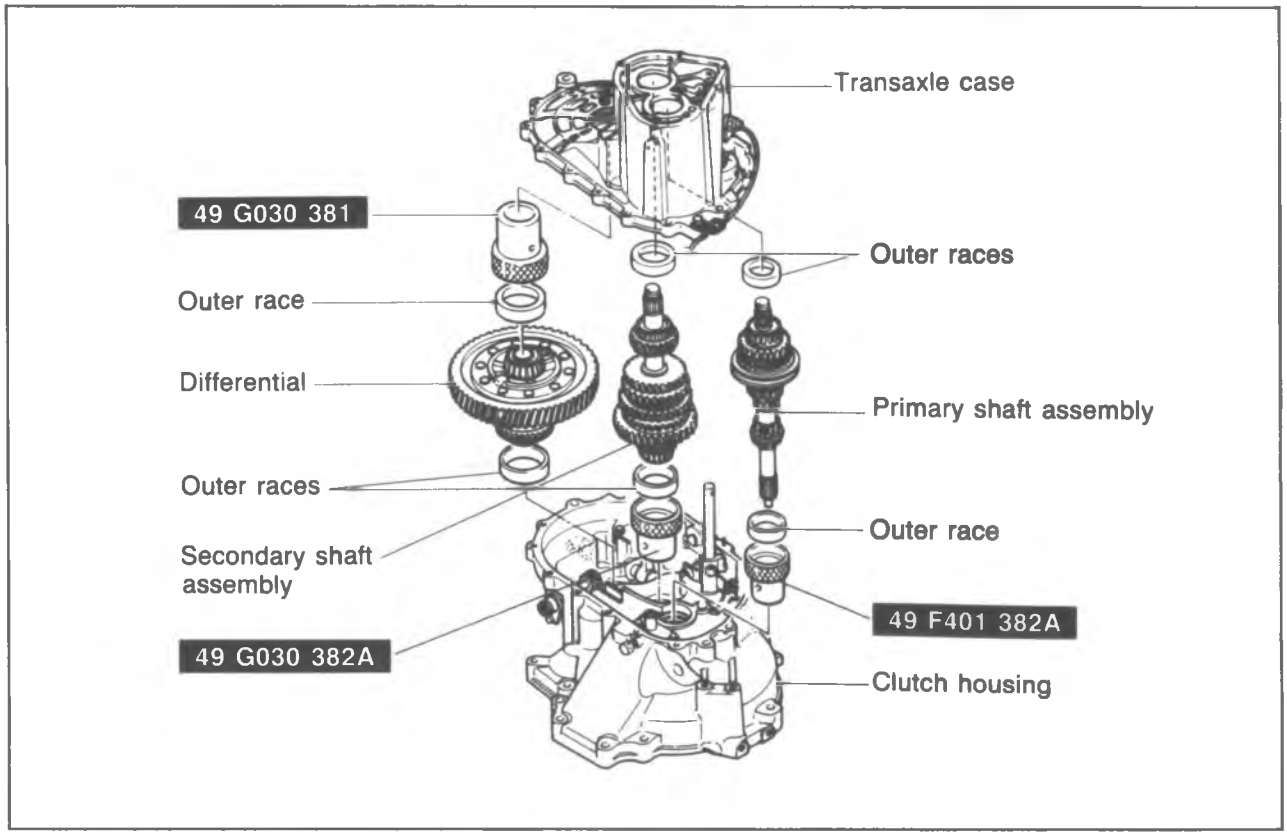

83U07A-033

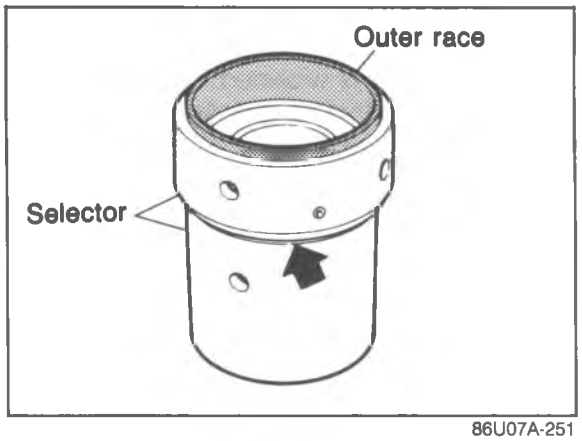

86U07A-251

1. Install the primary and secondary shaft bearing outer races into the transaxle case (diaphragm springs and shims removed).
2. After mounting the clutch housing onto the transaxle hanger, and set the differential bearing outer race into the clutch housing.
   Next, position a piece of pipe against the outer race and tap in with a hammer until it contacts the clutch housing.
3. Assemble the outer races into the **SST** (selector) as shown in the figure.

Note
Turn the selector to eliminate the gap indicated by the arrow in the figure.

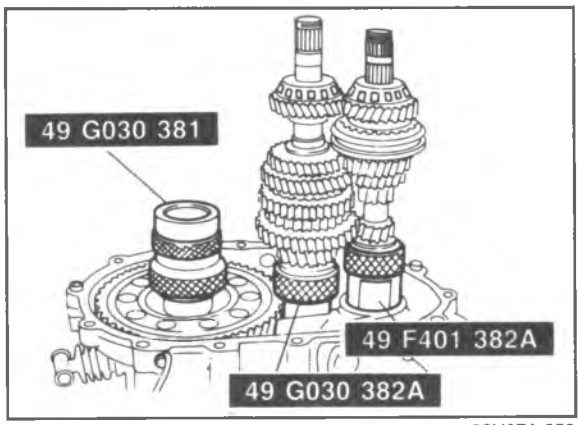

86U07A-252

4. Set the differential assembly onto the clutch housing, then mount the bearing outer race and the selector on the differential.
   Set the assembled selectors for the primary and secondary shaft in the clutch housing.
   Mount the shaft gear assemblies as shown in the figure.

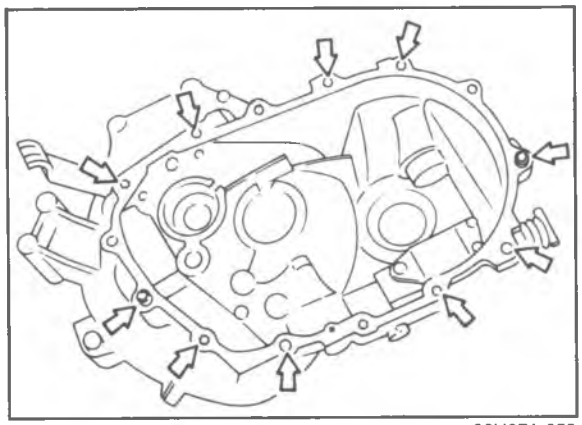

86U07A-253

5. Set the **SST** (collars) in the positions shown in the figure.

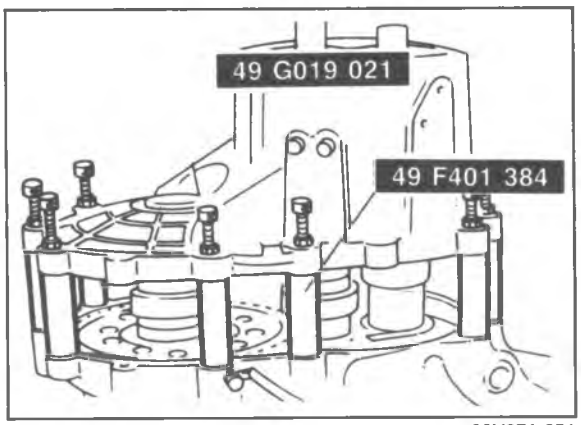

86U07A-254

Install the transaxle case then tighten the **SST** (bolts) to the specified torque.

Tightening torque:
37—52 N·m (3.8—5.3 m-kg, 27—38 ft-lb)

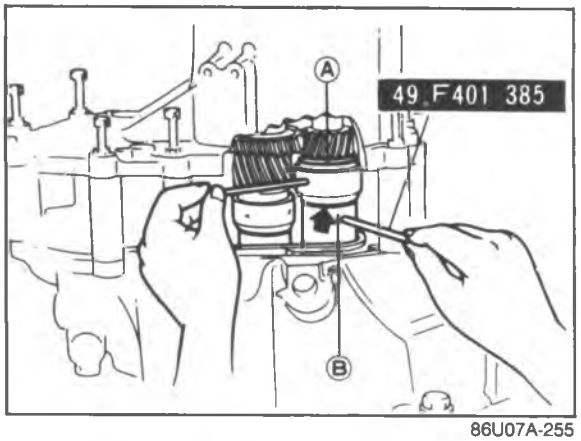

86U07A-255

6. To seat the bearings, mount the **SST** (bars) on parts Ⓐ and Ⓑ of the selector, and then turn the selector so the gap is widened.
   Then turn it in the reverse direction until the gap is eliminated.

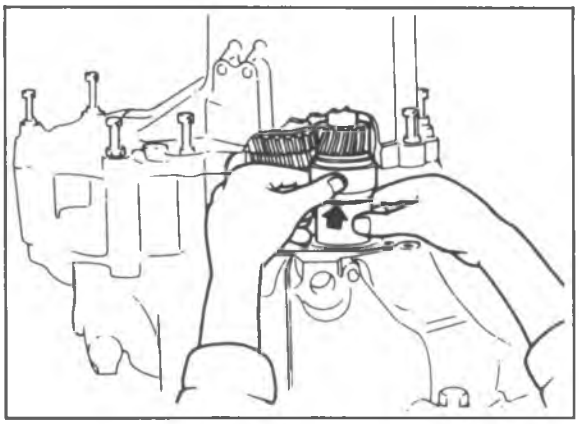
86U07A-256

7. Manually expand the selector until the selector no longer turns by hand.

   Note
   Check that each shaft turns smoothly.

8. Use a feeler gauge and measure the gap in the selector.

   Note
   Measure the gap around the entire circumference of the selector.

86U07A-257

9. Take the maximum reading and determine the shim to be used as follows:

   < **Primary shaft adjust shim** >
   - Subtract the diaphragm spring thickness (0.70 mm, 0.0276 in) from the gap determined in the step 8.
   - Select the closest thinner shim from the table.

   Example
   1.22 mm (0.0480 in) – 0.70 mm (0.0276 in) = 0.52 mm (0.0204 in)
   Shim: 0.50 mm (0.020 in)

Thickness (Shaft gears)	mm (in)
0.20 (0.008)	0.50 (0.020)
0.25 (0.010)	0.55 (0.022)
0.30 (0.012)	0.60 (0.024)
0.35 (0.014)	0.65 (0.026)
0.40 (0.016)	0.70 (0.028)
0.45 (0.018)	

86U07A-258

   < **Secondary shaft adjust shim** >
   - Subtract the diaphragm spring thickness (0.70 mm, 0.0276 in) from the gap determined in the step 10.
   - Select the closest thinner shim from the table.

   Example
   1.22 mm (0.0480 in) – 0.70 mm (0.0276 in) = 0.52 mm (0.0204 in)
   Shim: 0.55 mm (0.022 in)

   Note
   Use a maximum of two shims.

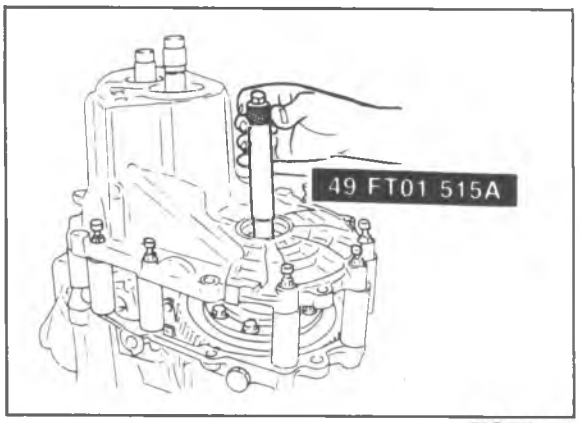

76G07A-609

10. Install the **SST**.

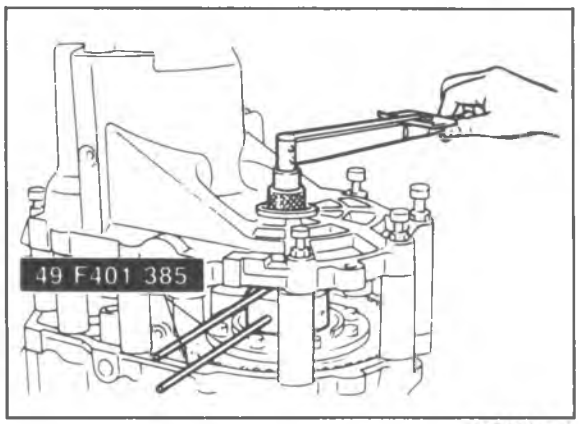

76G07A-610

11. Adjust the selector with the **SST** until the specified preload is obtained.

    Preload:
    0.5 N·m (5 cm-kg, 4.3 in-lb)

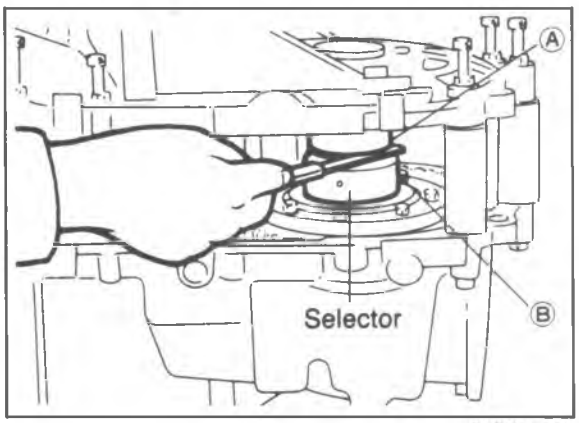

76G07A-611

12. Use a feeler gauge to measure the gap in the selector for the differential.

    Note
    Measure the gap around the entire circumference of the selector

13. Add **0.15 mm (0.0059 in)** to the measured clearance and select the combination of shims closest in value to that measurement.
    See the table below for available shim sizes.

    Example: 0.32 mm (0.013 in)
    0.32 mm (0.013 in) + 0.15 mm (0.0059 in) = 0.47 mm (0.019 in).
    So the nearest shim (on the thick side) to 0.47 mm (0.019 in) is 0.50 mm (0.020 in).

    Note
    Use a maximum of two shims.

Thickness	mm (in)
0.10 (0.004)	0.70 (0.026)
0.15 (0.006)	0.75 (0.028)
0.20 (0.008)	0.80 (0.030)
0.25 (0.010)	0.85 (0.032)
0.30 (0.012)	0.90 (0.034)
0.35 (0.014)	0.95 (0.036)
0.40 (0.016)	1.00 (0.038)
0.45 (0.018)	1.05 (0.040)
0.50 (0.020)	1.10 (0.042)
0.60 (0.022)	1.15 (0.044)
0.65 (0.024)	1.20 (0.046)

76G07A-612

14. Remove the **SST** and transaxle case.
15. Remove the selectors, the primary shaft assembly and the differential.
16. Remove the bearing outer races.

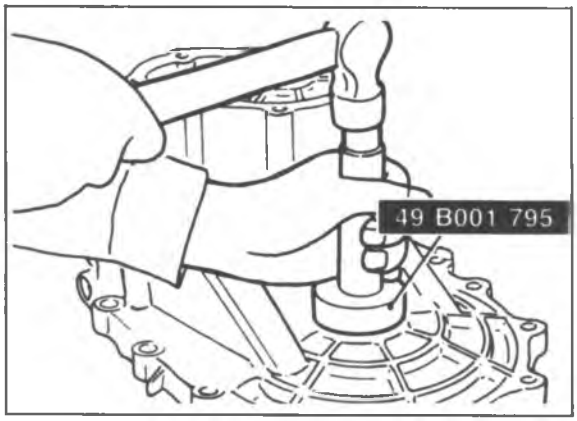

86U07A-102

Assembly

1. Install the neutral switch.
2. Install the drain plug.
3. Install the back-up lamp switch.
4. Install the new oil seals with the **SST**.

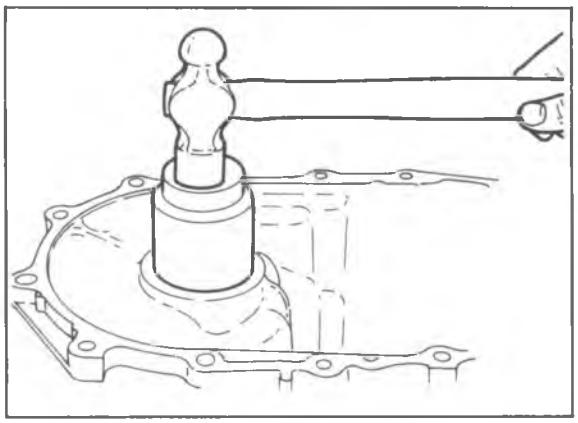
86U07A-103

5. Install the differential adjust shim(s) and the bearing outer race with a suitable pipe.

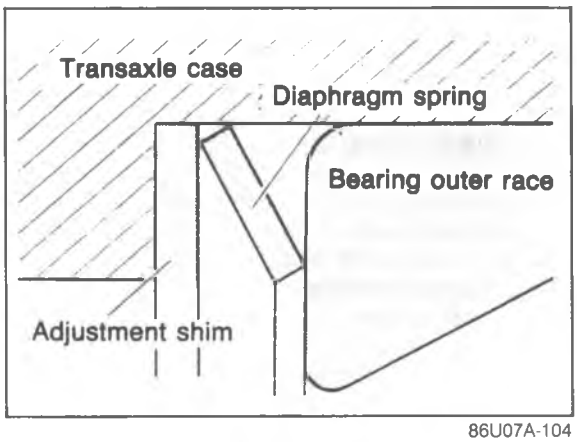

86U07A-104

6. Install the adjust shims, diaphragm spring, funnel, and bearing outer races.

Note
Install the diaphragm spring as shown in the figure.

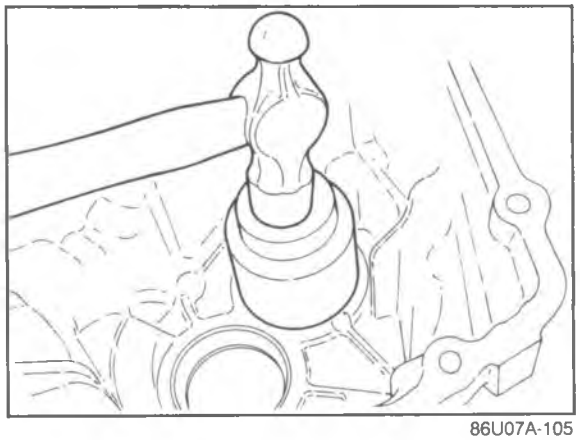
86U07A-105

7. Install the bearing outer races with a suitable pipe.

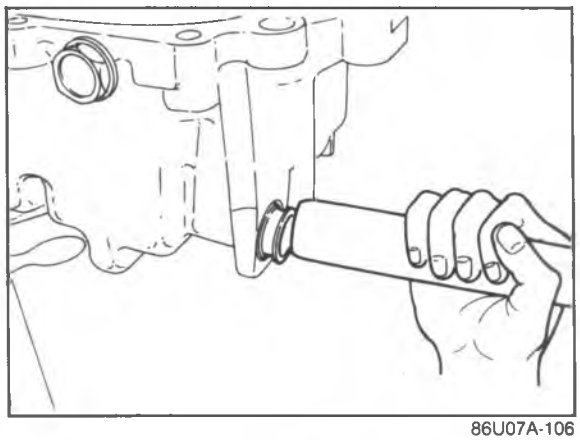

86U07A-106

8. Install the new breather.
9. Install the new change rod oil seal.

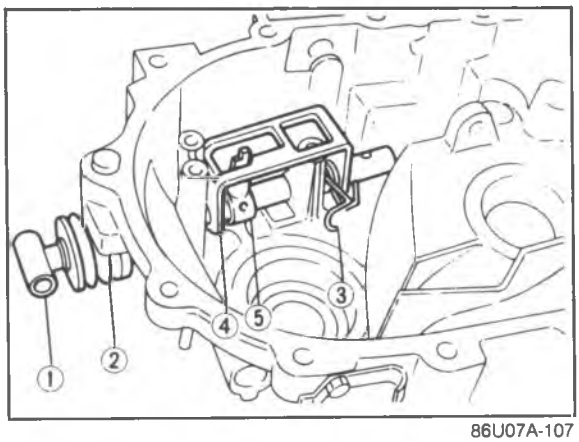

86U07A-107

10. Install the change rod (1), the boot (2), the spring (3), the reverse gate (4), and selector (5), as shown.
11. Install the new roll pin.

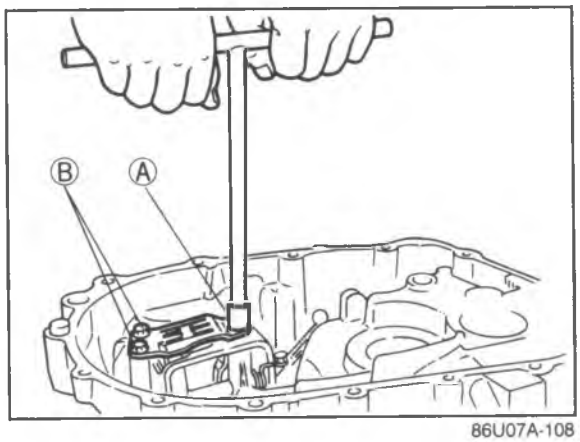

86U07A-108

12. Install the change arm.

Tightening torque: 12—14 N·m (120—140 cm-kg, 104—122 in-lb)

13. Install the guide plate.

Tightening torque:
Ⓐ 8—11 N·m (80—115 cm-kg, 69—100 in-lb)
Ⓑ 22—33 N·m (2.25—3.35 m-kg, 16—25 ft-lb)

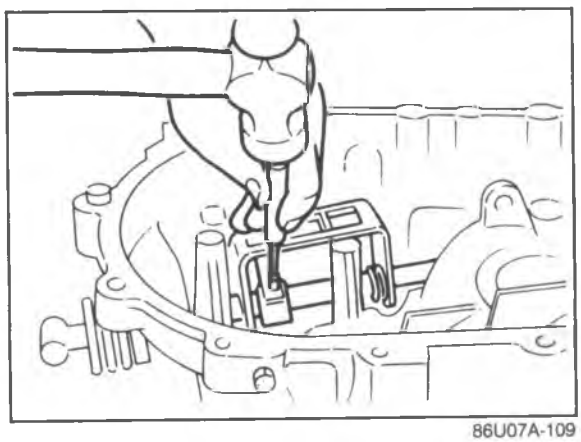

86U07A-109

14. Install reverse lever, and reverse lever shaft.
15. Install the new roll pin.
16. Install the speedometer driven gear assembly.

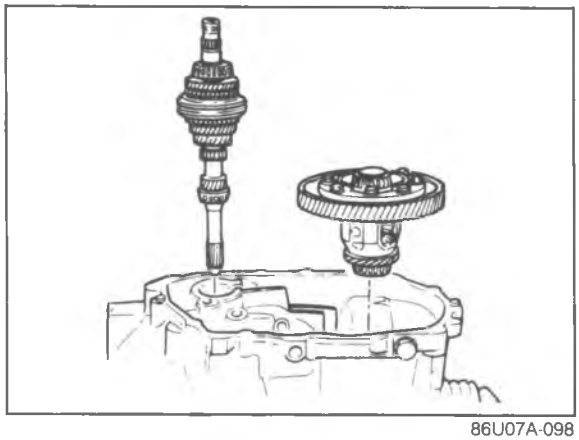

86U07A-098

Bearing Preload
Check the shaft gears and the differential bearing preload.

Note
a) Check that the correct adjust shims were selected.
b) If the bearing preload is not within specification, adjust again.

1. Set the primary shaft gear and the differential into the clutch housing.
2. Install the transaxle case, and tighten to the specified torque.

Tightening torque: 37—52 N·m (3.8—5.3 m-kg, 27—38 ft-lb)

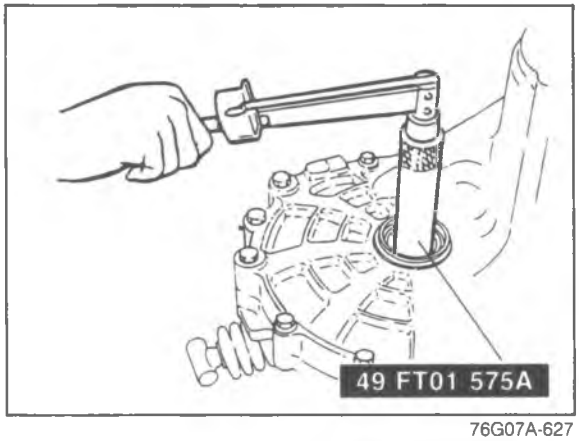

76G07A-627

3. Connect the **SST** and install it through the driveshaft hole.
4. Hook a spring scale to the attachment and measure the preload.

Preload: 1.4—2.0 N·m (14—20 cm-kg, 12.1—17.3 in-lb)

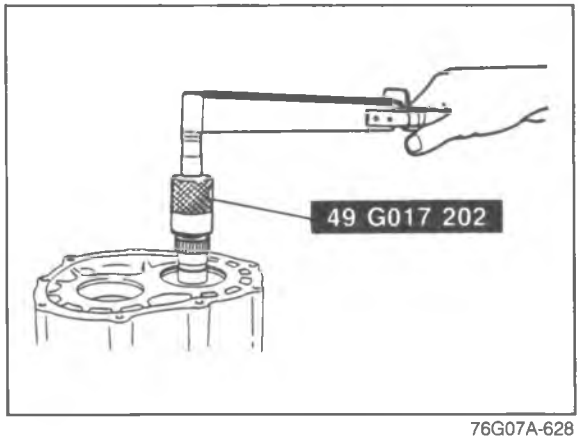

76G07A-628

5. Remove the **SST**.
6. With the transaxle facing in the direction shown in the figure, install the **SST** to the primary shaft gear.
7. Measure the preload.

Preload: 0.1—0.25 N·m (1.0—2.5 cm-kg, 0.87—2.18 in-lb)

Note
Extend the handle fully and hook the pull scale to the end of the handle.

76G07A-629

8. Remove the **SST**, transaxle case, primary shaft gear and differential.
9. Install the secondary shaft gear and transaxle case then tighten to the specified torque.

Tightening torque: 37—52 N·m (3.8—5.3 m-kg, 27—38 ft-lb)

10. Check the secondary shaft preload with the **SST**.

Preload: 0.2—0.4 N·m (2.0—4.0 m-kg, 1.7—3.4 in-lb)

STEP 4
Torque Specifications

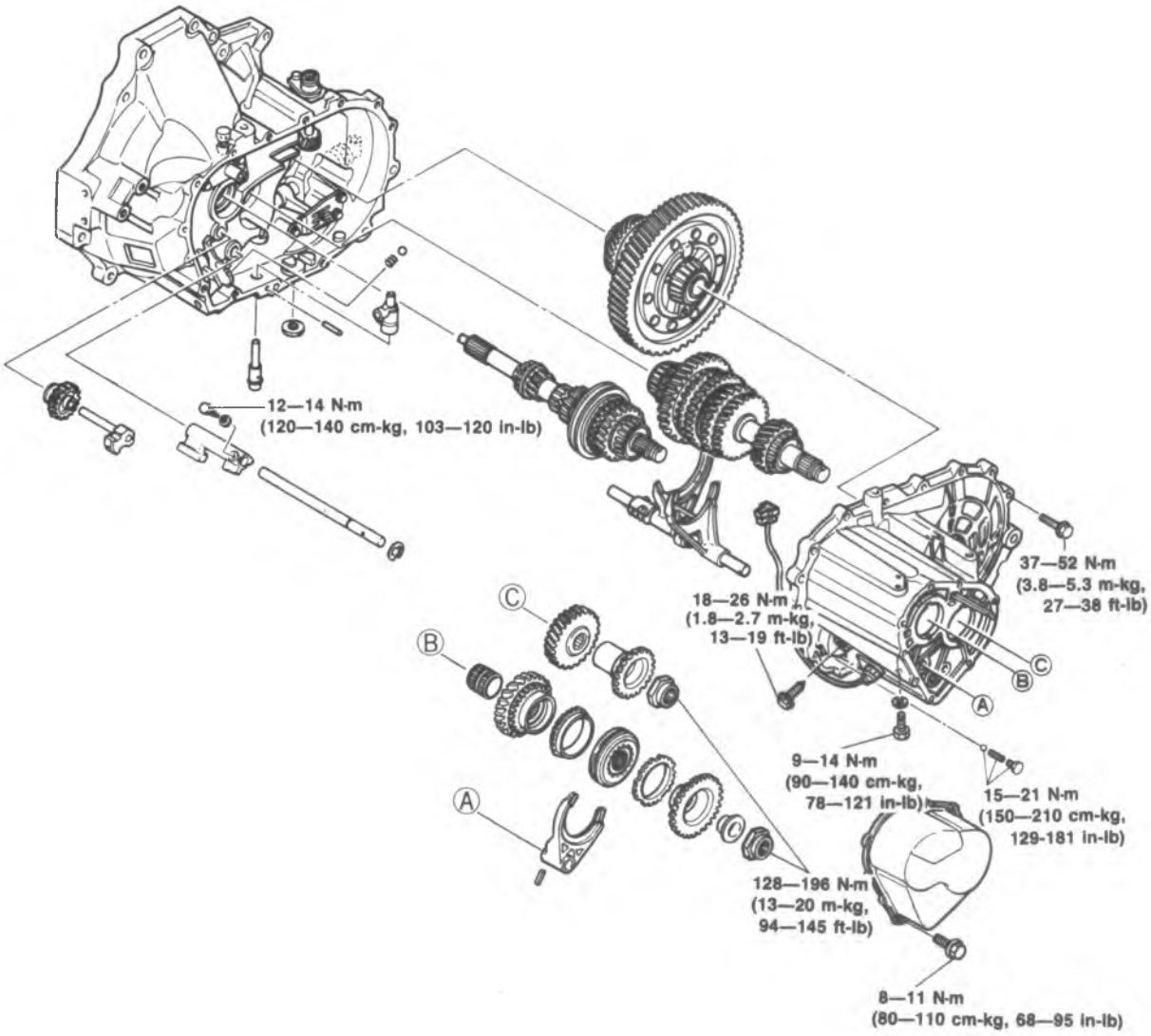

86U07A-110

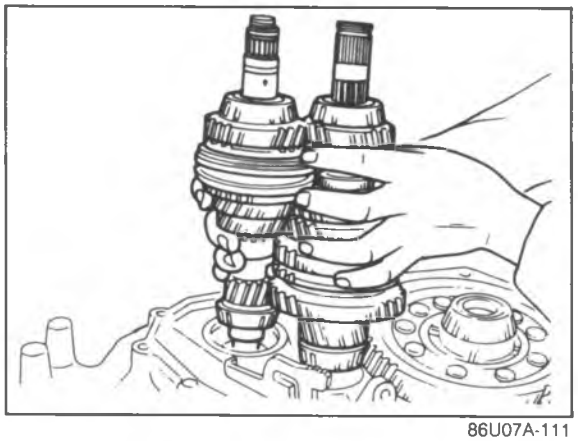

86U07A-111

1. Install the magnet and the differential assembly.
2. Install the primary shaft gear assembly and the secondary shaft gear assembly together.

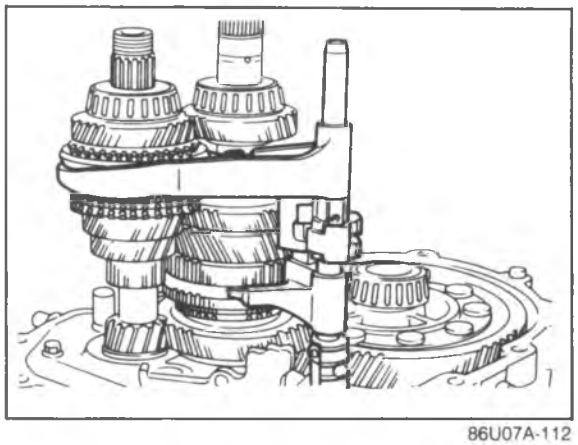

86U07A-112

3. Shift to 2nd gear and position the shift fork and shift rod assembly as shown.

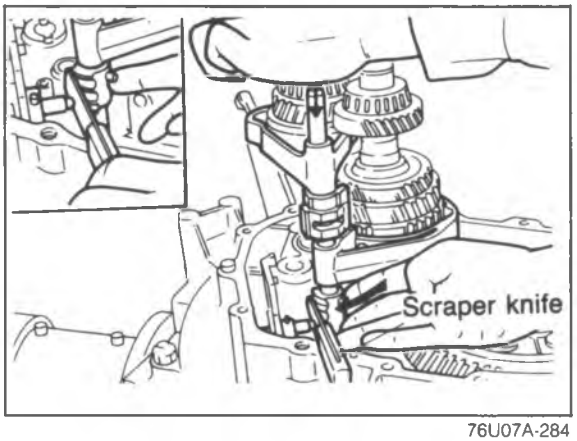

76U07A-284

4. Insert the spring seat and spring into the reverse lever shaft, install the steel ball, and place a scraper knife so that it contacts the steel ball.
5. With the edge of the control end against the knife, when the control end is pushed in the direction of the arrow in the figure so that the ball goes into the shaft, the rod will at the same time line up with the shift rod coupling hole in the clutch housing.

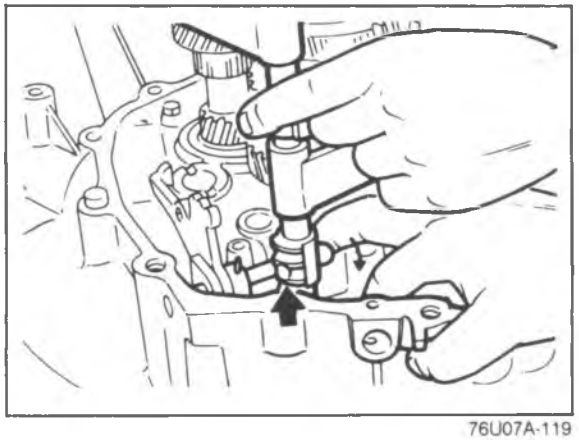

76U07A-119

6. Set each clutch hub sleeve to the neutral position, and tap the shift rod from above so that the steel ball goes into the center groove (of the 3 grooves in the control end).
7. Pull the ball part of the control end forward so that the steel ball goes into the detent in the groove.

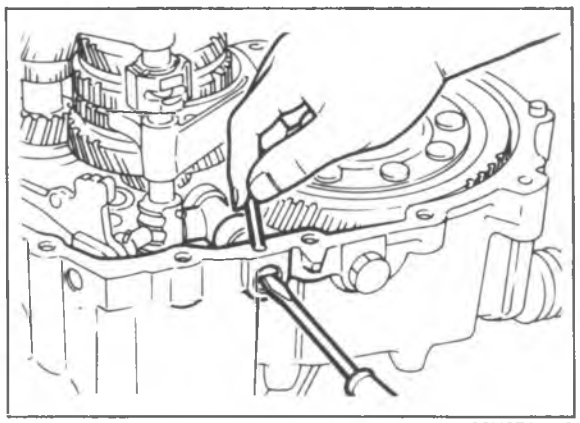

86U07A-113

8. Fit the crank lever in between the change arm and the control end, and connect the crank lever shaft to the crank lever.
9. Align the pin holes of the crank lever shaft and the clutch housing, and insert the pin.

Note
Use a new O-ring for the crank lever shaft.

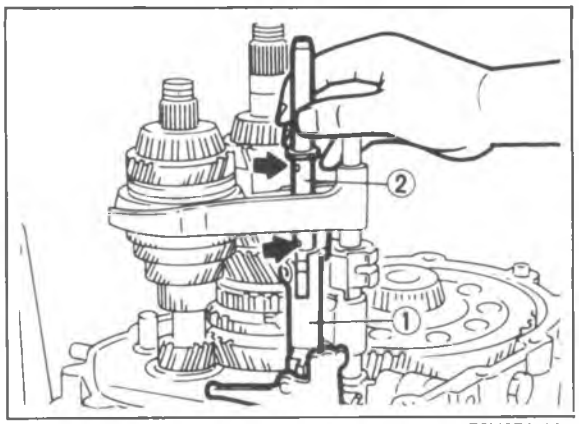

76U07A-121

10. Install the gate (1) and the shift rod (2), and tighten the gate mounting bolt.

Note
The mark (indicated by the arrow in the figure) and the gate mounting bolt hole must be in the same direction.

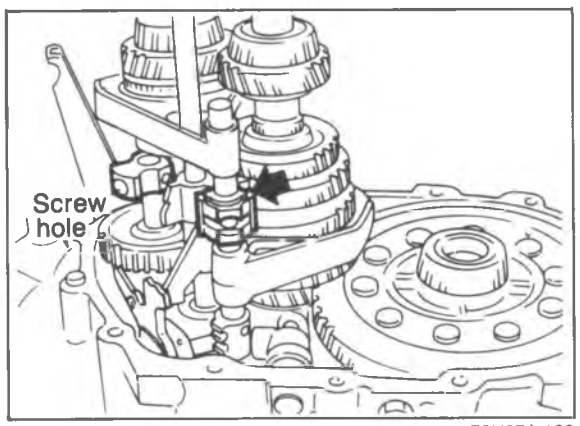

76U07A-122

11. Install the reverse idle gear and the reverse idle shaft.
12. Connect the magnet to the clutch housing.
13. Align the end of the interlock sleeve with the control lever indicated by the arrow, and, at the same time, face the reverse idle shaft screw hole in the direction shown in the figure.

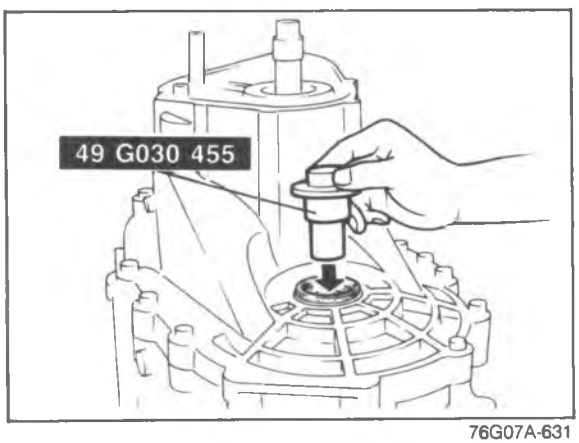

76G07A-631

14. Apply a thin coat of sealant to the contact surfaces of the clutch housing and transmission case, tighten the transaxle case installation bolts to the specified torque.

Tightening torque:
37—52 N·m (3.8—5.3 m-kg, 27—38 ft-lb)

15. Insert the **SST** to driveshaft coupling hole.

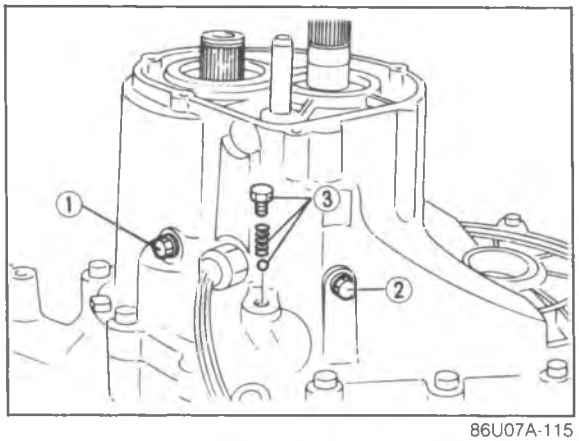

86U07A-115

16. Install the lock bolt (1), the guide bolt (2).
17. Install the ball, spring and lock bolt (3).

Tightening torque:
(1) 18—26 N·m
(184—264 cm-kg, 159—228 in-lb)
(2) 9—14 N·m
(90—140 cm-kg, 78—121 in-lb)
(3) 15—21 N·m
(150—210 cm-kg, 129—181 in-lb)

Note
Check that gear change operation is smooth.

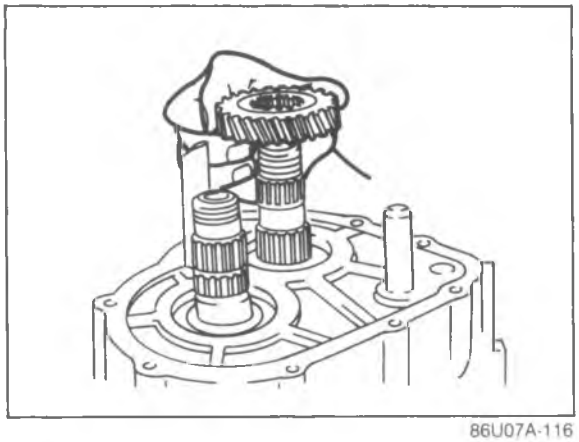
86U07A-116

18. Install the secondary 5th gear as shown.

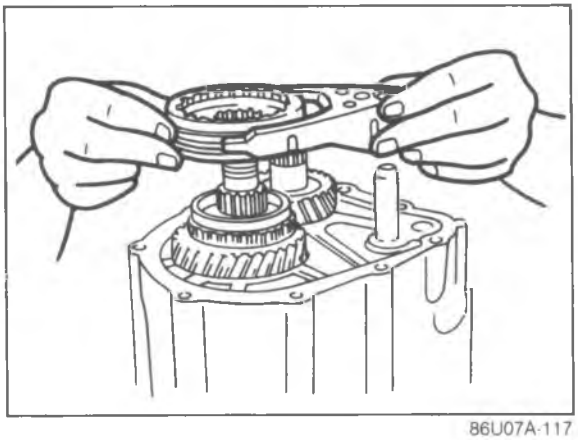
86U07A-117

19. Install the gear sleeve, the 5th gear and synchronizer ring to primary shaft.

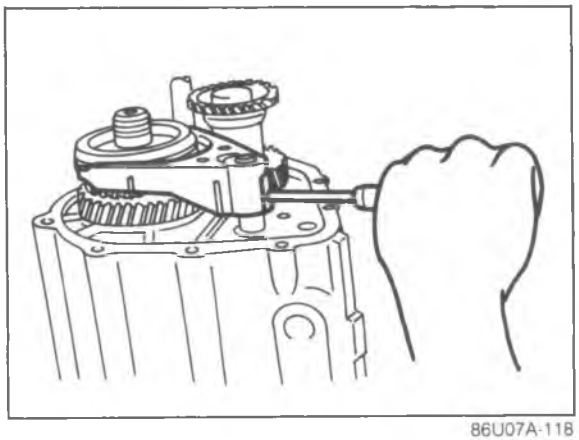
86U07A-118

20. Tap in the roll pin.
21. Install the synchronizer ring and the reverse synchronizer gears.

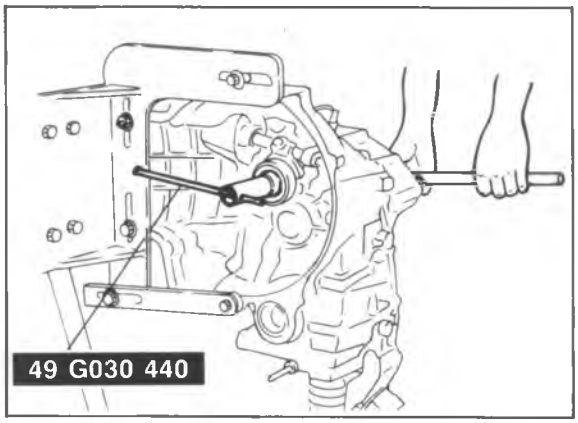

86U07A-119

22. Shift to 1st gear.
23. Lock the primary shaft with the **SST**.
24. Tighten new lock nuts.

    Tightening torque: 128—196 N·m (13.0—20.0 m-kg, 94—145 ft-lb)

25. Stake the lock nuts.

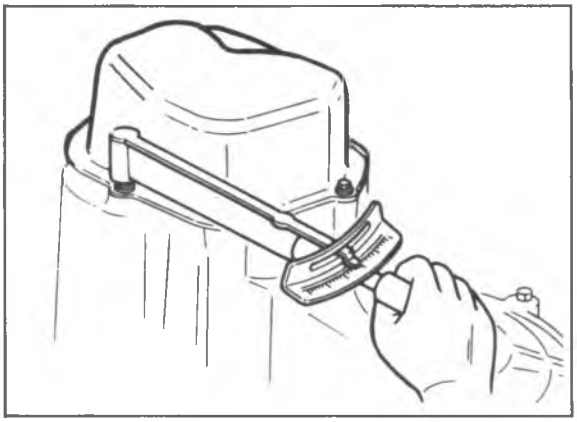

86U07A-120

26. Clean and coat the both surfaces and install the rear cover.

    Tightening torque: 8—11 N·m (80—110 cm-kg, 68—95 in-lb)

H-type MTX (Turbo)

DISASSEMBLY

STEP 1

Disassemble in the sequence shown in the figure referring to the disassemble note for the specially marked parts.

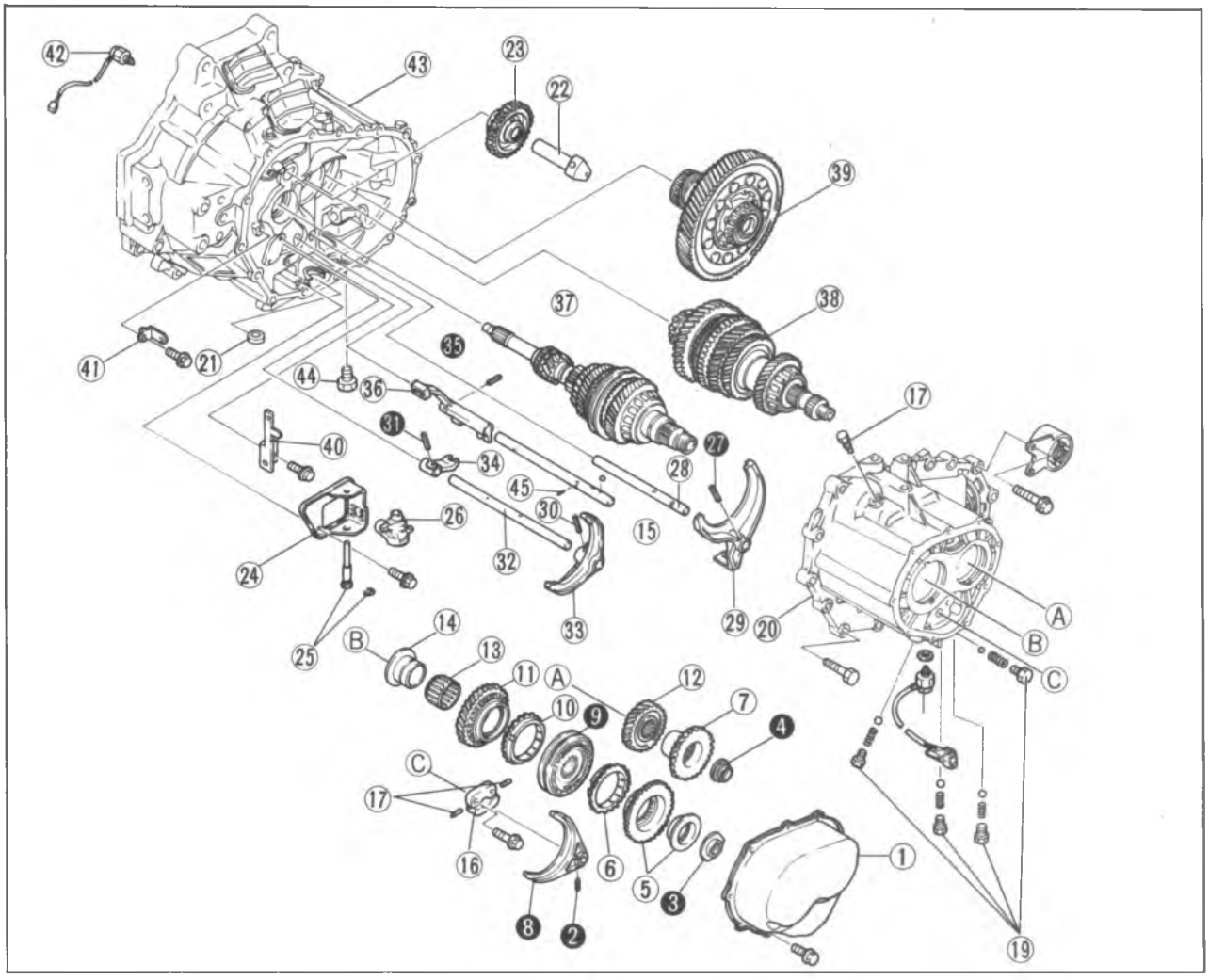

86U07A-121

1. Rear cover
2. Roll pin
3. Lock nut
4. Lock nut
5. Primary reverse synchronizer gear and gear sleeve
6. Synchronizer ring
7. Secondary reverse synchronizer gear
8. Shift fork (5th/Rev.)
9. Clutch hub assembly (5th/Rev.)
10. Synchronizer ring
11. 5th gear
12. Secondary 5th gear
13. Needle bearing
14. Gear sleeve
15. Ball
16. Interlock plate
17. Interlock pins
18. Reverse switch
19. Bolt(s), spring(s) and ball(s)
20. Transaxle case
21. Magnet
22. Reverse idle shaft
23. Reverse idle gear
24. Base plate unit
25. Crank lever shaft and snap ring
26. Crank lever assembly
27. Roll pin
28. Shift rod (1st/2nd)
29. Shift fork (1st/2nd)
30. Roll pin
31. Roll pin
32. Shift rod (3rd/4th)
33. Shift fork (3rd/4th)
34. Shift rod end (3rd/4th)
35. Roll pin
36. Shift rod end (5th/Rev.)
37. Primary shaft gear assembly
38. Secondary shaft gear assembly
39. Differential assembly
40. Reverse shift lever
41. Lever set spring
42. Neutral switch
43. Clutch housing
44. Drain plug
45. Interlock pin

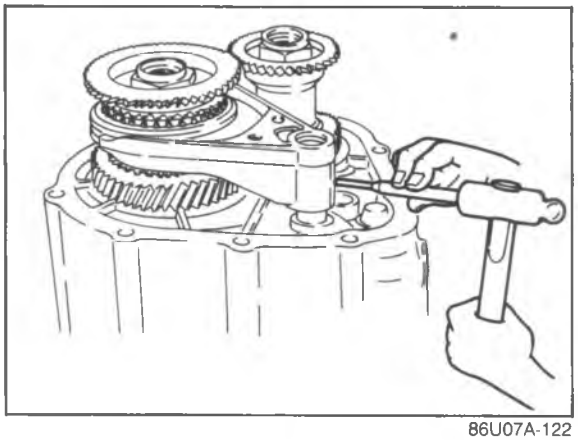

86U07A-122

Disassembly Note
Roll pin(s)
Remove the roll pin(s) with pin punch.

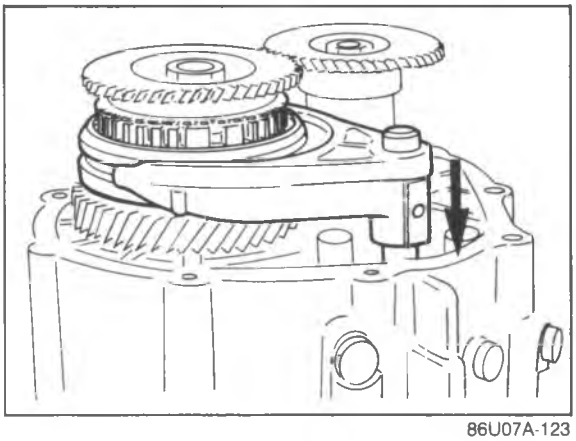

86U07A-123

Lock nut
1. After removing the roll pin, shift the gears to 5th gear.
2. Shift the gears to 1st gear.
3. Remove the lock nuts.

Caution
Uncrimp the tab of the locknuts.

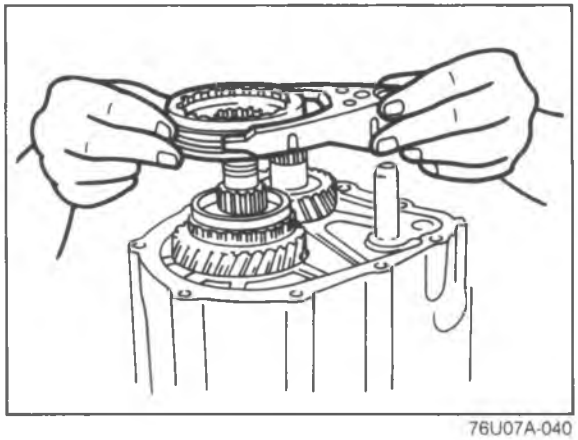

76U07A-040

Shift Fork (5th)
Remove the shift fork (5th) together with the clutch hub assembly.

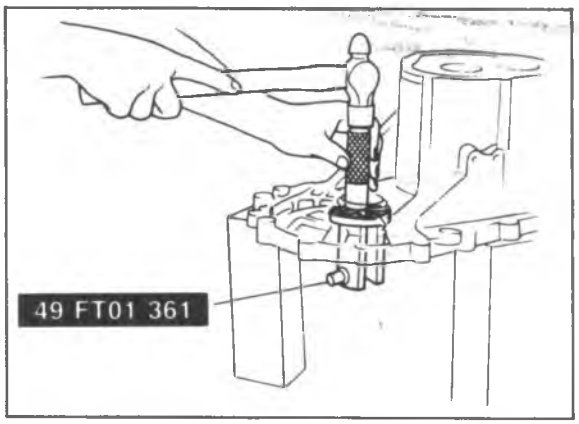

86U07A-126

Disassembly Note
Bearing outer race (differential)
Remove the bearing outer races with the **SST**.

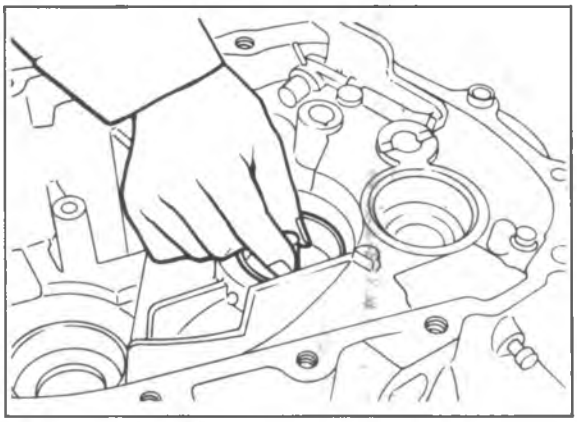
86U07A-127

Bearing outer race and funnel (secondary shaft gear; clutch housing)
Remove the bearing outer race by lifting the funnel and the race out together.

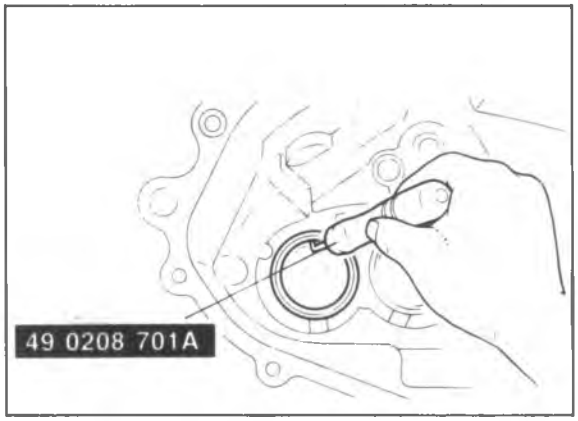

86U07A-128

Bearing outer race (secondary shaft gear; transaxle case)
Remove the bearing outer race with the **SST**.

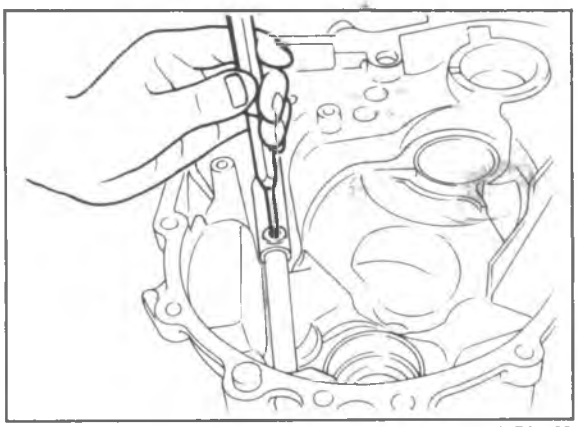
86U07A-129

Change rod
Remove the roll pin with pin punch.

STEP 3

Disassemble in the sequence shown in the figure referring to the disassembly note for the specially marked part.

Note

a) Replace the bearings with new ones whenever they are disassembled.

b) Before disassembly, check the thrust clearance of all gears. (Refer to page 7A—65)

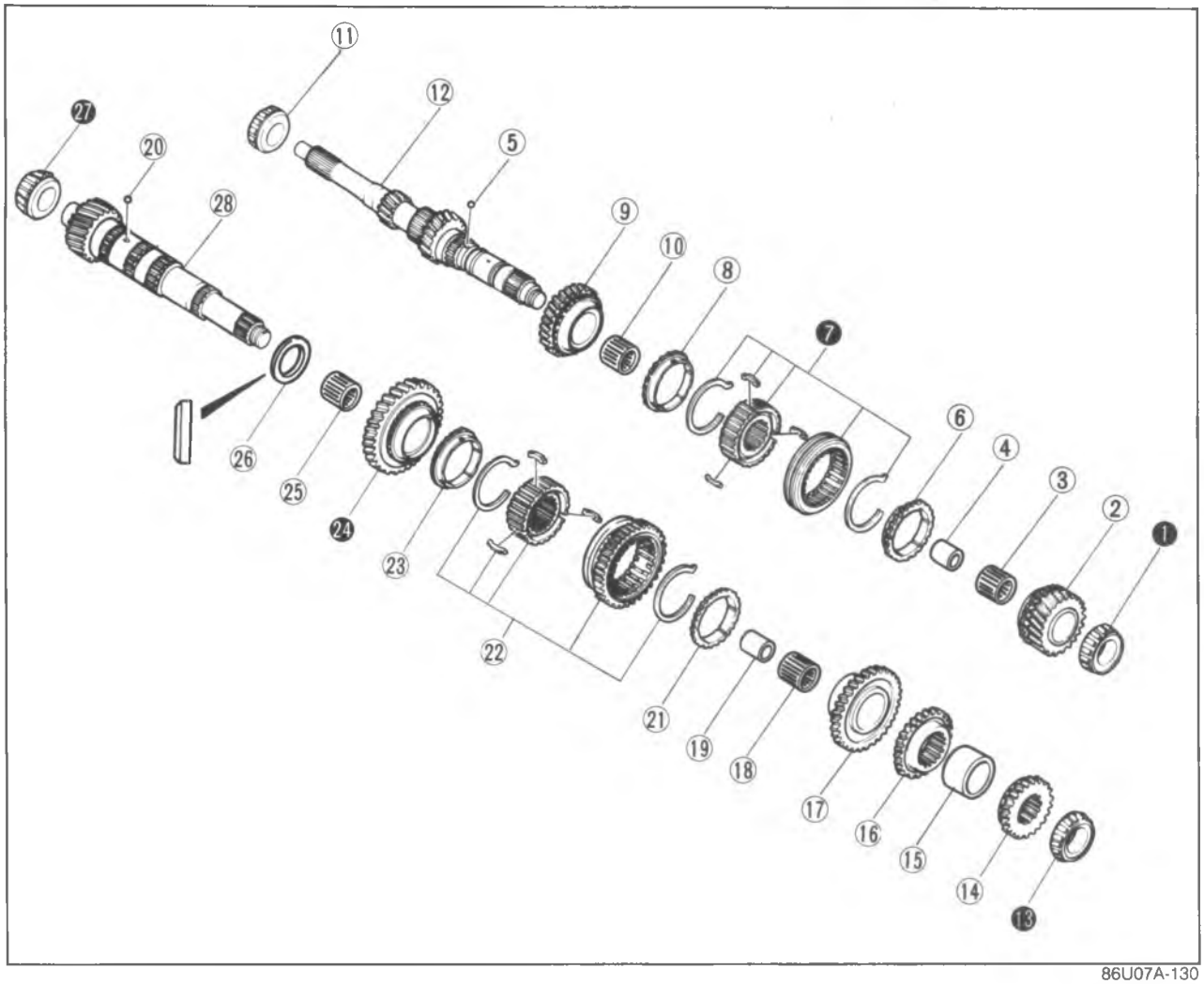

86U07A-130

1. Bearing inner race
2. 4th gear
3. Needle bearing
4. Gear sleeve
5. Ball
6. Synchronizer ring
7. Clutch hub assembly (3rd/4th)
8. Synchronizer ring
9. 3rd gear
10. Needle bearing
11. Bearing inner race
12. Primary shaft
13. Bearing inner race
14. Secondary 4th gear
15. Gear sleeve
16. Secondary 3rd gear
17. 2nd gear
18. Needle bearing
19. Gear sleeve
20. Ball
21. Synchronizer ring
22. Clutch hub assembly (1st/2nd)
23. Synchronizer ring
24. 1st gear
25. Needle bearing
26. Thrust washer
27. Bearing inner race
28. Secondary shaft
29. Reverse gear

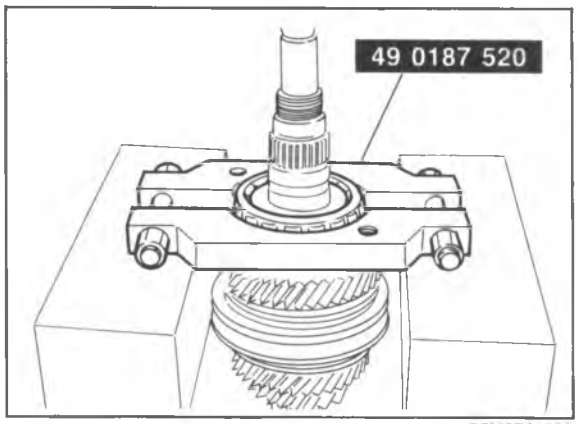

86U07A-131

Disassembly Note
Primary shaft gear

Bearing (4th gear end)
Remove the bearing inner race with the **SST**.

Caution
Hold the shaft with one hand so that it does not fall.

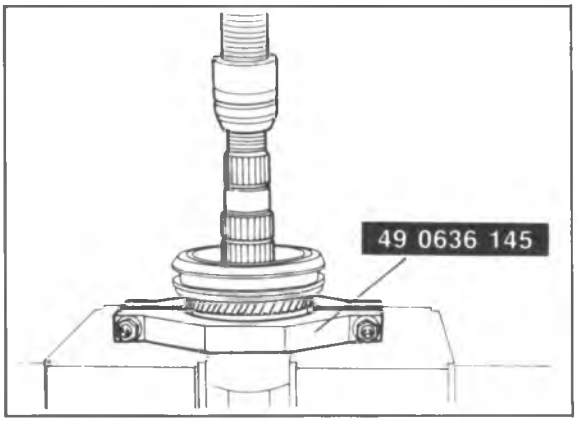

86U07A-132

Clutch hub assembly (3rd/4th)
Remove the 3rd gear, clutch hub assembly with the **SST**.

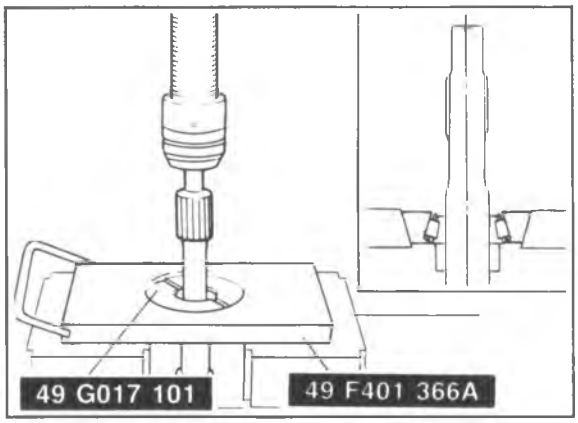

86U07A-133

Bearing
Remove the bearing inner race with the **SST**.

Caution
Hold the shaft with one hand so that it does not fall.

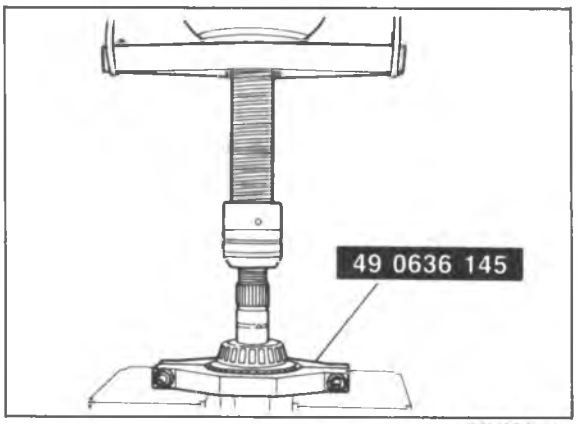

86U07A-134

Secondary shaft gear
Bearing (secondary 4th gear end)
Remove the bearing and secondary 4th gear with the **SST**.

Caution
Hold the shaft with one hand so that it does not fall.

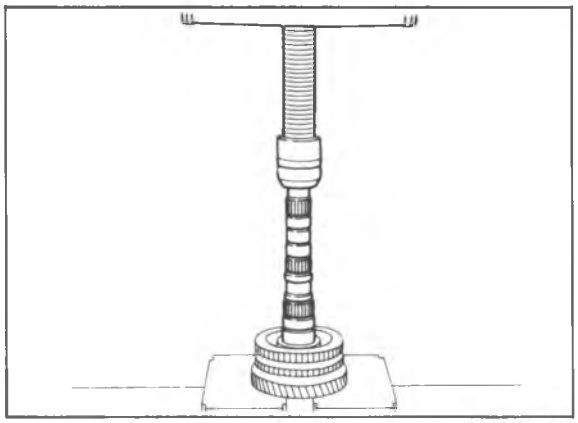
86U07A-135

1st gear
Remove the clutch hub assembly (1st/2nd) and 1st gear with the **SST**.

Caution
Hold the shaft with one hand so that it does not fall.

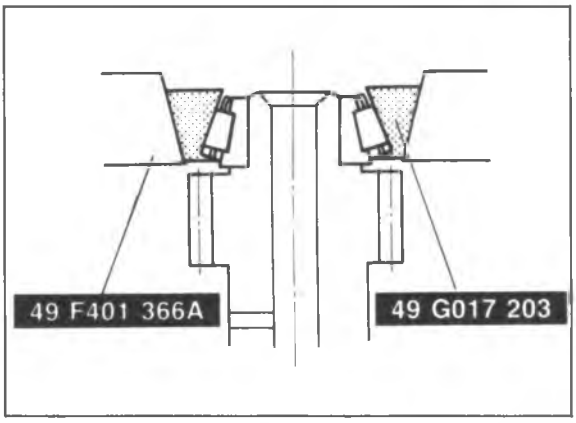

86U07A-136

Bearing
1. Set the **SST** to the bearing inner race as shown.

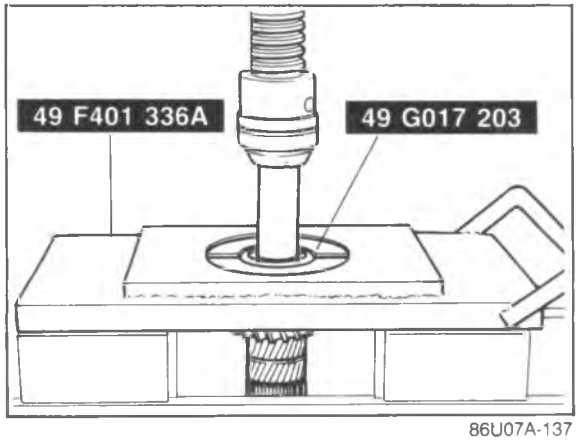

86U07A-137

2. Remove the bearing inner race with the **SST**.

Caution
Hold the shaft with one hand so that it does not fall.

STEP 4 (Differential)
Disassemble in the sequence shown in the figure referring to the disassembly note for the specially marked parts.

Note
If any of the bearings are removed, replace with new ones.

86U07A-138

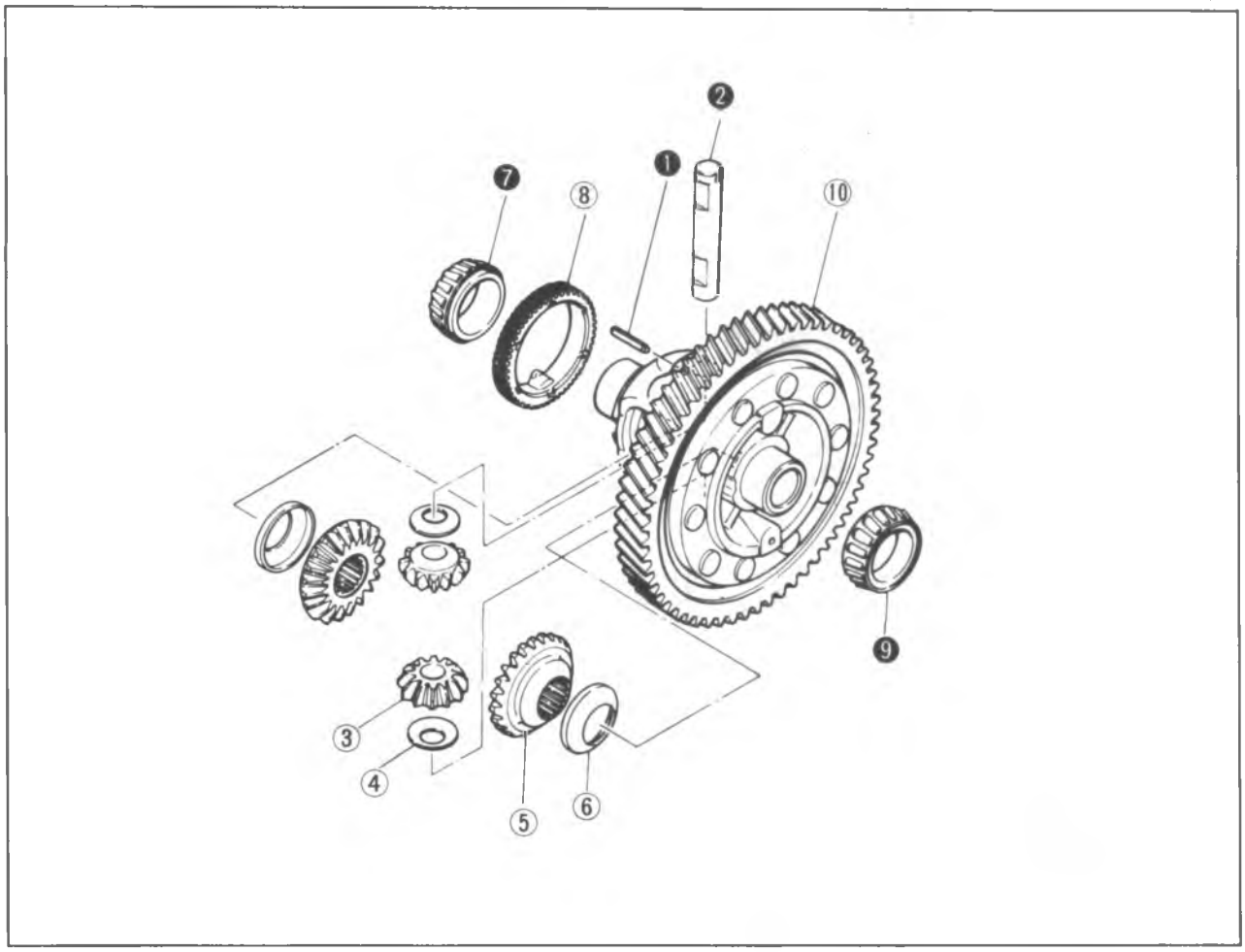

61G07X-067

1. Knock pin
2. Pinion shaft
3. Pinion gear
4. Thrust washer
5. Side gear
6. Thrust washer
7. Side bearing inner race
8. Speedometer drive gear
9. Side bearing inner race
10. Gear case

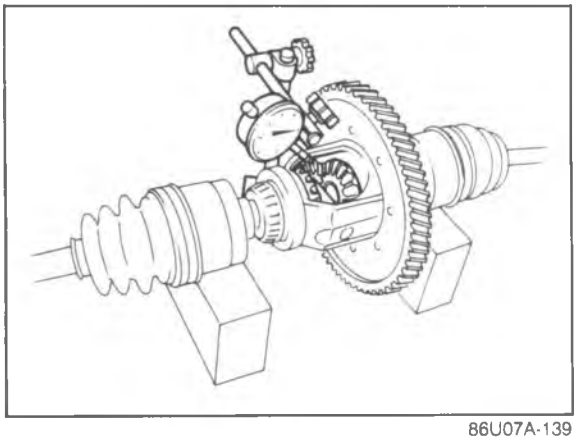

86U07A-139

Disassembly Note
Backlash
Before disassembly, check the backlash of the side gears and pinion gears. (Refer to page 7A—62)

Standard backlash: 0—0.1 mm (0—0.004 in)

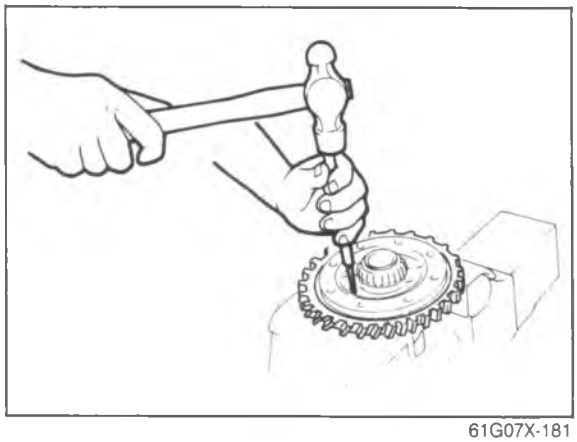

61G07X-181

Knock-pin
To remove the knock-pin from the pinion shaft, place the gear case in a vise and knock the pin out.

Note
Insert the rod into the knock-pin hole from the ring gear mounting surface side.

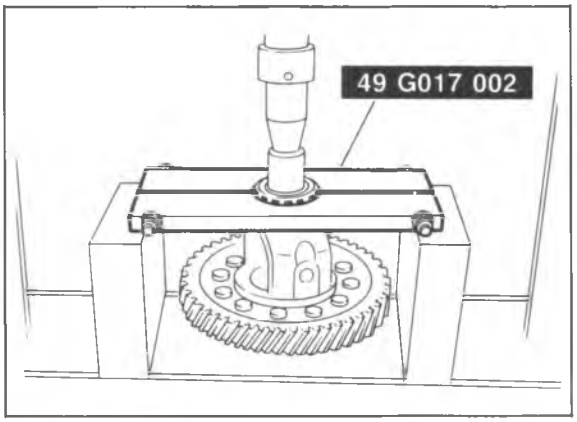

86U07A-140

Side bearing inner race (side opposite ring gear)
Remove the bearing inner race with the **SST**.

Caution
Hold the gear case with one hand so that it does not fall.

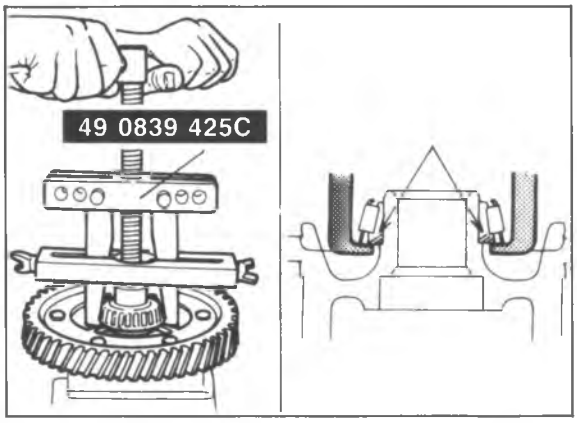

86U07A-141

Side bearing inner race (ring gear side)
Remove the bearing inner race with the **SST**.

Note
Use pads in the vise.

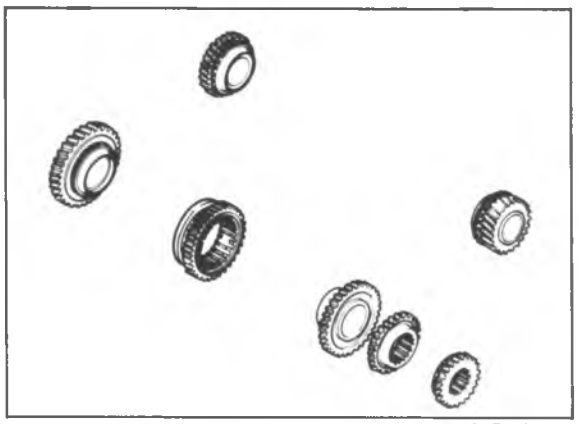

61G07X-182

INSPECTION

Check the following parts, replace if necessary.

1st, 2nd, 3rd, 4th, and 5th gears
1. Worn or damaged synchronizer cone.
2. Worn or damaged hub sleeve coupling.
3. Worn or damaged teeth.
4. Worn or damaged inner surface or end surface of gears.

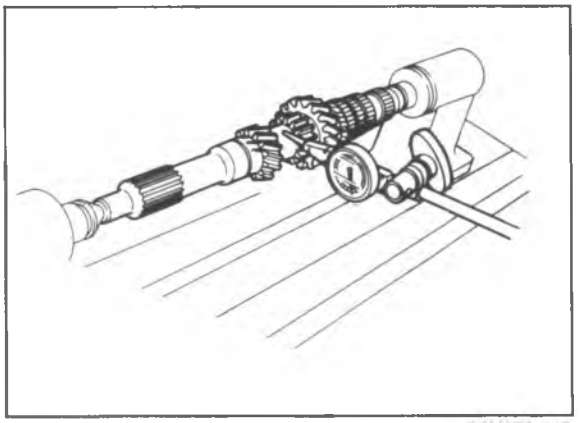

86U07A-142

Primary Shaft Gear and Primary Gear
1. Worn or damaged gear contact surface.
2. Worn or damage splines.
3. Worn teeth.
4. Clogged oil passage.
5. Primary shaft gear run-out.

Run-out: 0.035 mm (0.0014 In) max.

Note
If the shaft gear is replaced, adjust the bearing preload. (Refer to page 7A—67)

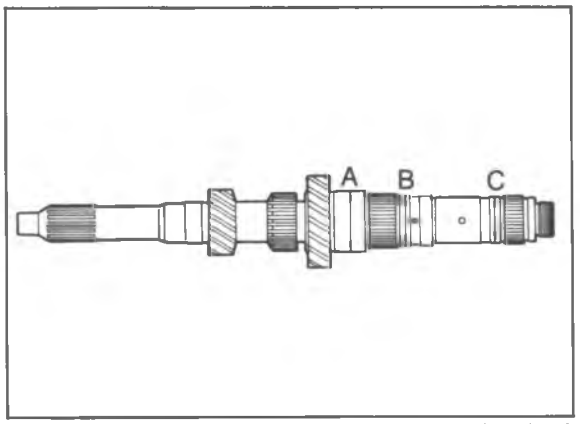

86U07A-143

Outer diameter:
A. 41.80—41.99 mm (1.646—1.653 in)
B. 36.75—37.00 mm (1.447—1.457 in)
C. 36.17—36.20 mm (1.424—1.425 in)

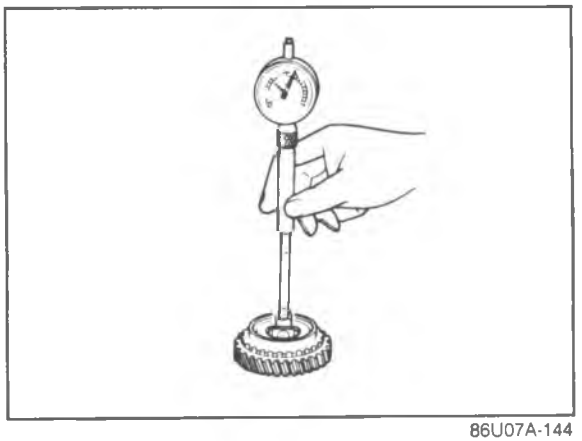

86U07A-144

Inner diameter (gears):
3rd. 47.00—47.02 mm (1.850—1.851 in)
4th. 47.00—47.02 mm (1.850—1.851 in)
5th. 43.00—43.02 mm (1.693—1.694 in)

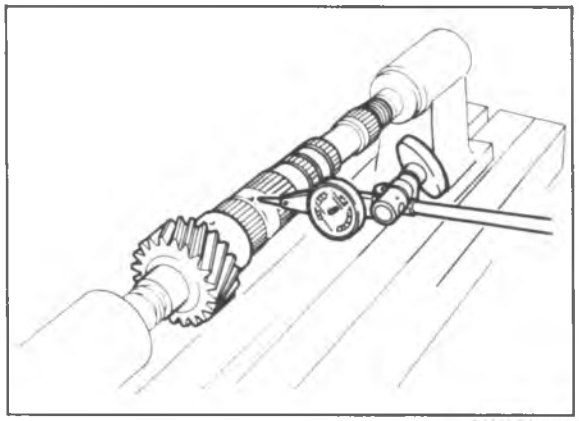

86U07A-145

Secondary Shaft Gear

1. Worn or damaged gear contact surface.
2. Worn or damaged splines.
3. Worn teeth.
4. Clogged oil passage.
5. Secondary shaft gear run-out.

Run-out: 0.03 mm (0.0012 in) max.

Note
If the shaft gear is replaced, adjust the bearing preload. (Refer to Page 7A—67)

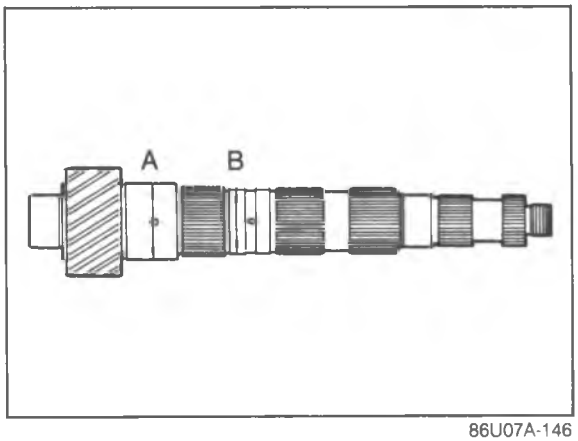

86U07A-146

Outer diameter:
A. 42.80—42.91 mm (1.685—1.689 in)
B. 36.95—37.11 mm (1.455—1.461 in)

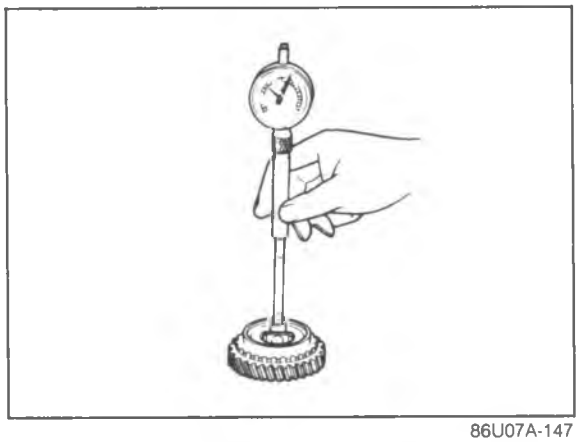

86U07A-147

Inner diameter (gears):
1st. 48.00—48.02 mm (1.890—1.891 in)
2nd. 50.00—50.02 mm (1.968—1.969 in)

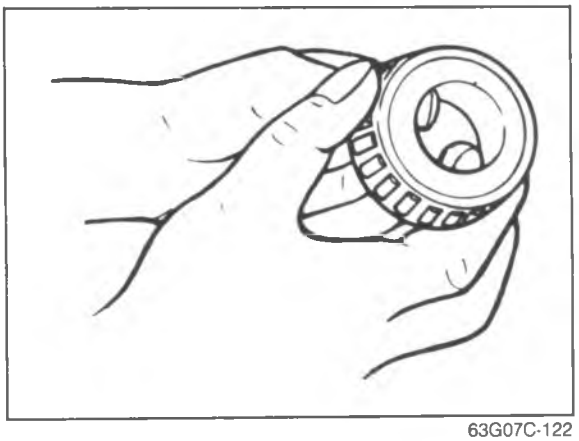

63G07C-122

Bearing

1. Roughness or noise while turning.
2. Damaged bearing
3. Worn bearing.

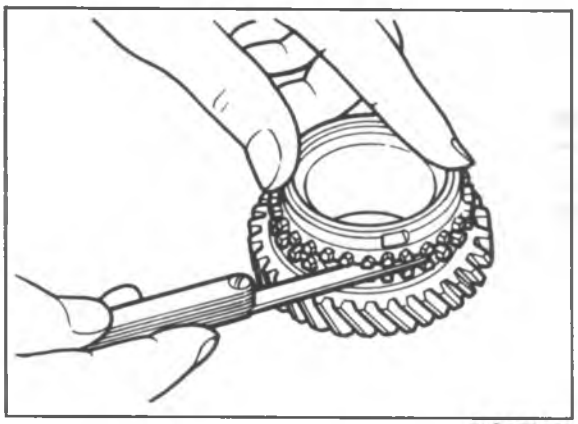

61G07X-076

Synchronizer Ring
1. Engagement with gear.
2. Worn or damaged teeth.
3. Worn or damaged tapered surface.
4. Clearance from the side of gear.

Clearance: 1.5 mm (0.059 in)
Minimum: 0.8 mm (0.031 in)

Note
a) Place the synchronizer ring on the gear cone and rotate until it stops (approx. 10 to 20 degrees), then measure around the circumference.
b) If the clearance is less than specified replace the synchronizer ring or gear.

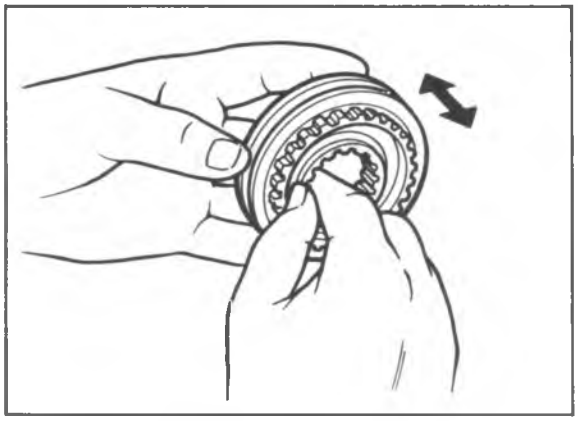

61G07X-183

Clutch Hub
1. Worn or damaged splines.
2. Worn or damaged synchronizer key groove.
3. Worn end surface.
4. Operation of the hub sleeve when installed.

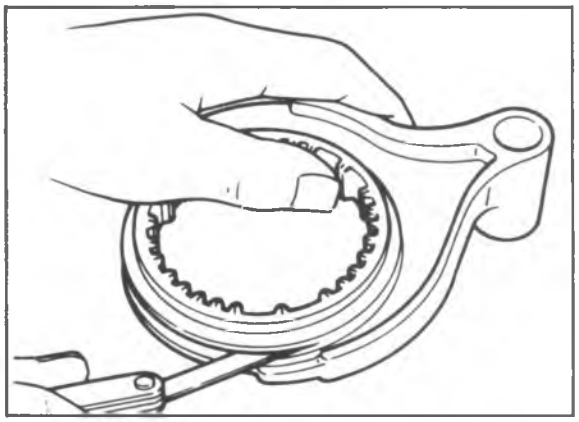

68U07A-148

Clutch Hub Sleeve
1. Worn or damaged hub splines.
2. Worn or damaged sleeve fork groove.
3. Clearance between sleeve and shift fork.

Clearance mm (in)

	Standard	Maximum
1st/2nd	0.05—0.408 (0.002—0.0161)	0.458 (0.018)
3rd/4th	0.1—0.408 (0.0039—0.0161)	
5th/Rev.		

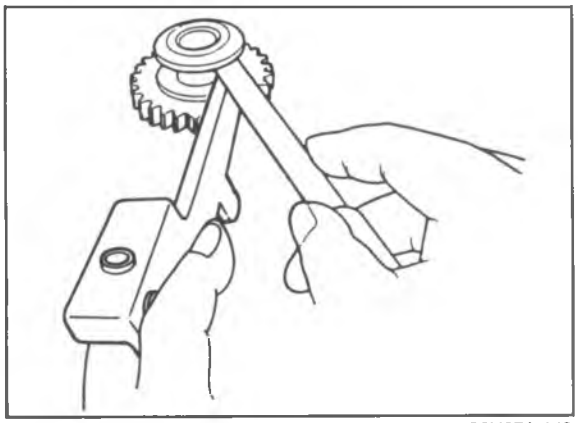

86U07A-149

Reverse Idle Gear
1. Worn or damaged bushing.
2. Worn or damaged teeth.
3. Worn or damaged reverse shift lever coupling groove.
4. Clearance between gear and reverse shift lever.

Clearance:
0.095—0.318 mm (0.00619—0.0125 in)
Maximum: 0.368 mm (0.0145 in)

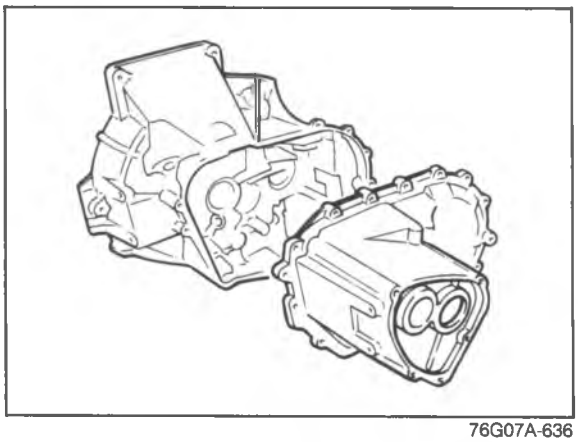

76G07A-636

Clutch Housing and Transaxle Case
Cracks or damage.

Note
If the clutch housing or transaxle case is replaced, adjust the bearing preload of the shaft gears and the preload of the differential side bearings. (Refer to page 7A—67)

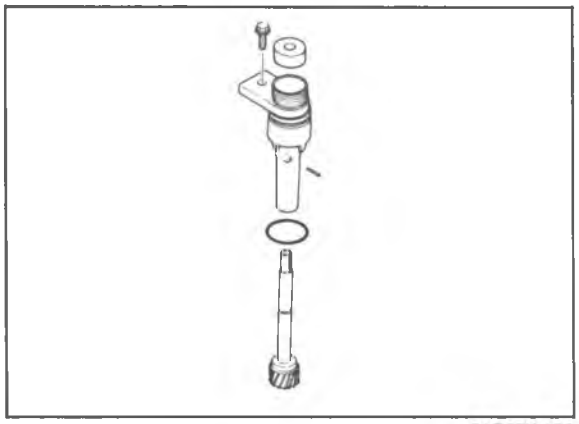

61G07X-186

Speedometer Driven Gear Assembly
1. Worn or damaged teeth.
2. Worn or damaged "O"ring.

Ring Gear Speedometer Drive Gear
Worn or damaged teeth.

Oil Seal
Damaged or worn lip.

ASSEMBLY

Note
a) Wash all parts.
b) Apply oil to all friction surface.
c) Use new roll pins and retaining rings.

86U07A-151

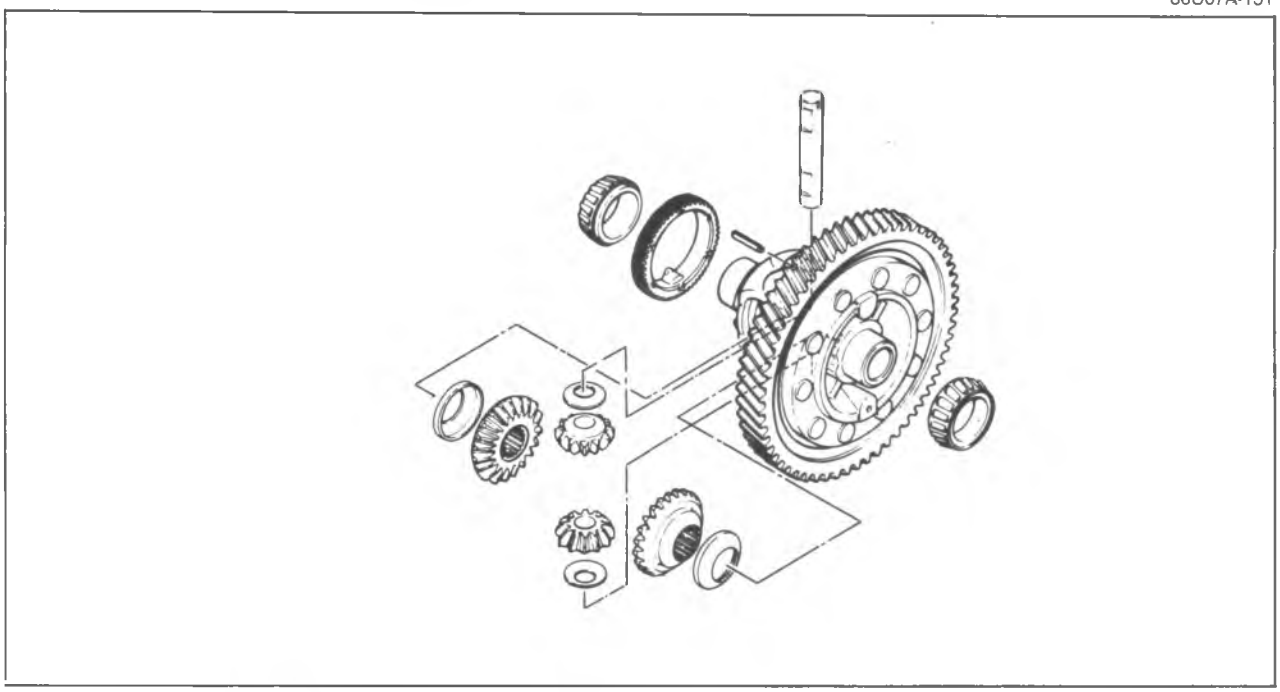

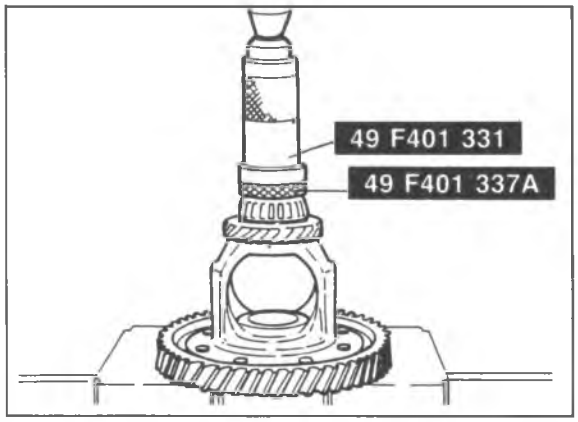

86U07A-152

1. Install the speedometer drive gear.
2. Install the side bearing inner race with the **SST**.

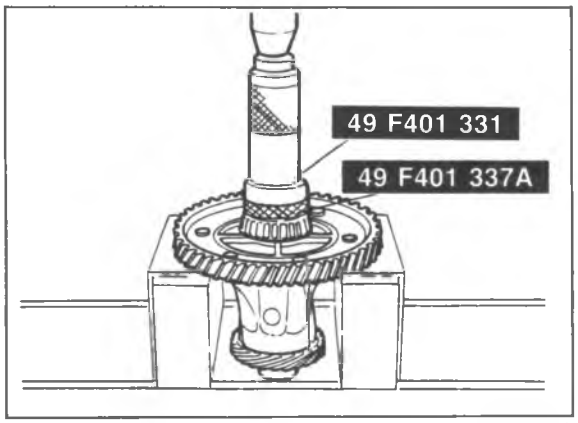

86U07A-153

3. Install the bearing inner race with the **SST**.

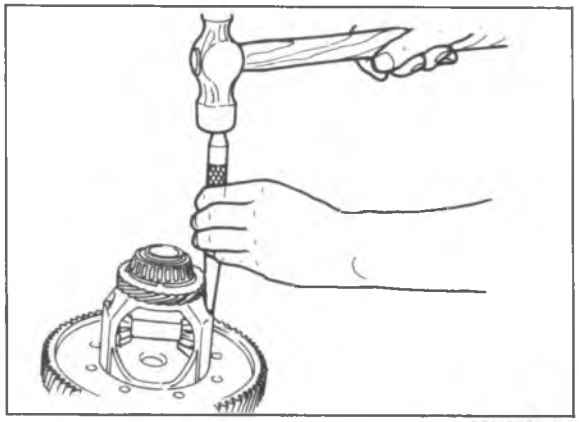

86U07A-154

4. Install the pinion gears and washers.
5. Install the pinion shaft.
6. After installing the knock pin, make a crimp so that the pin cannot come out of the gear case.

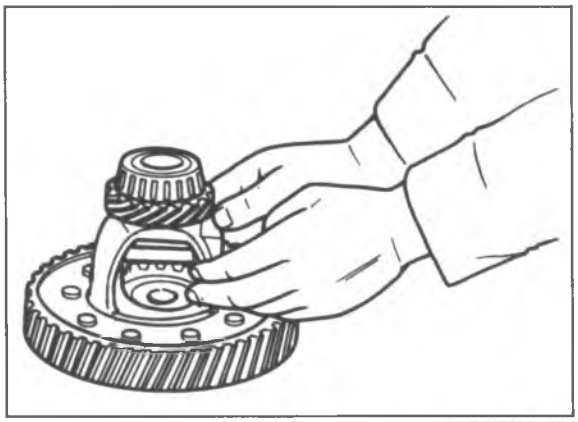

86U07A-155

7. Install the side gears and washers.

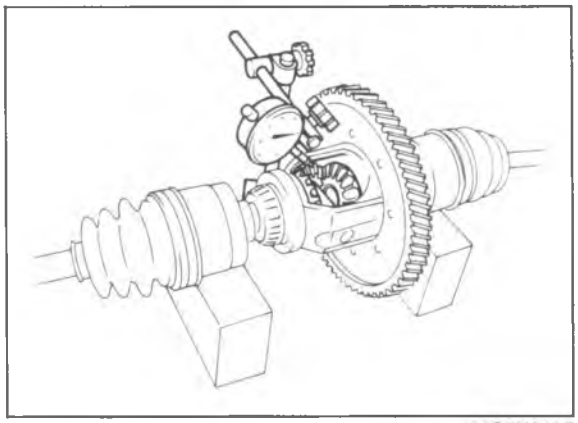

61G07X-187

Backlash of Side Gear and Pinion Gear

Check and adjust by the following procedure.

1. Install the left and right driveshafts in the differential assembly.
2. Support the driveshafts on V-blocks as shown in the figure.
3. Measure the backlash of both pinion gears.

Backlash: 0—0.1 mm (0—0.004 in)

Identification mark	Thickness
0	2.0 mm (0.079 in)
1	2.1 mm (0.083 in)
2	2.2 mm (0.087 in)

61G07X-188

4. If the backlash is more than the standard, adjust by selecting a thrust washer from the table to go between the case and side gears.

Note
Use thrust washers with the same thickness on each side.

STEP 2

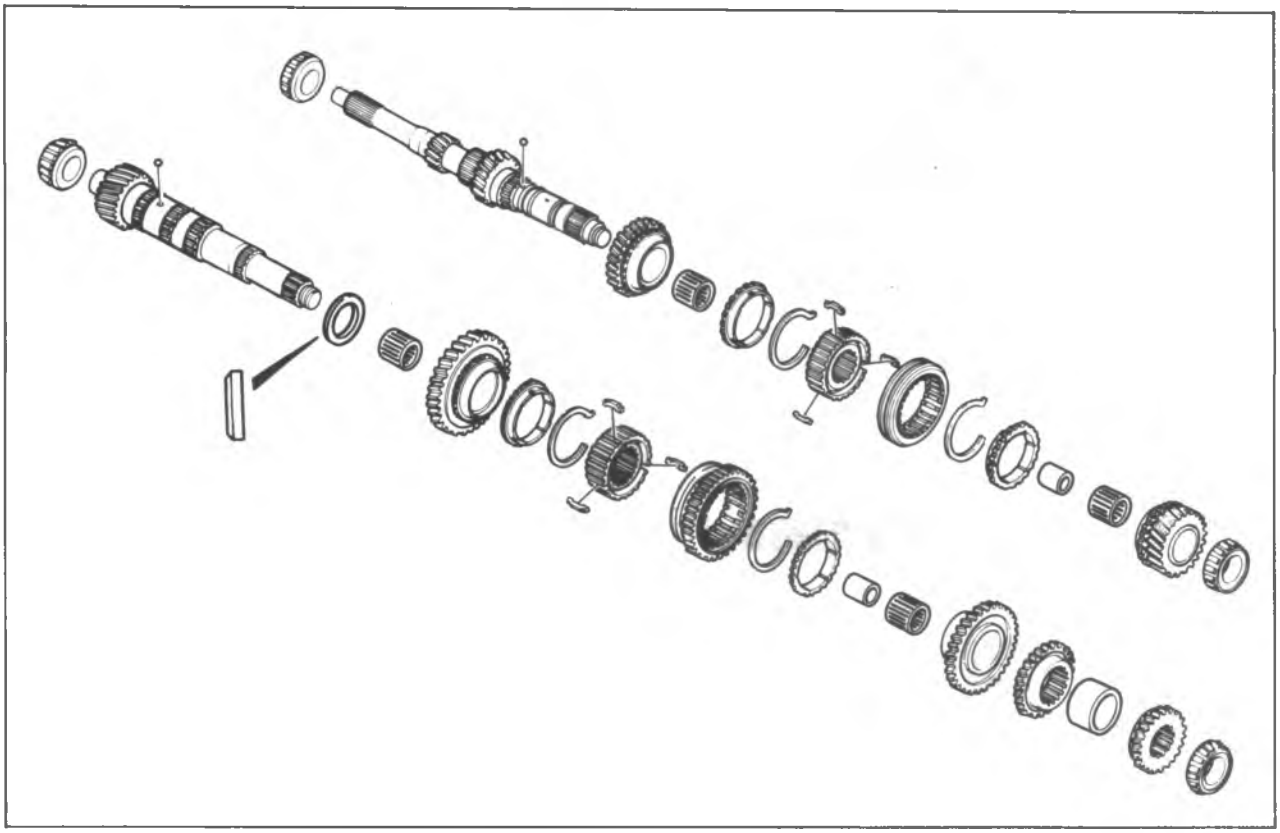

86U07A-156

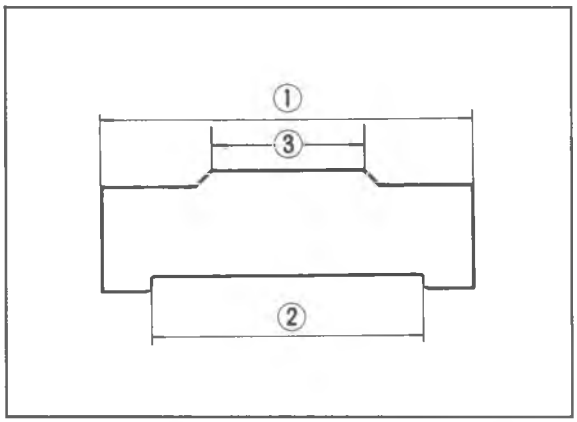

86U07A-157

Synchronizer key

Note
There are two (2) types of synchronizer key.

Standard dimension:

	①	②
1st/2nd	22.0 (0.87)	14.2 (0.56)
3rd/4th, 5th/Rev.	17.0 (0.67)	12.2 (0.48)

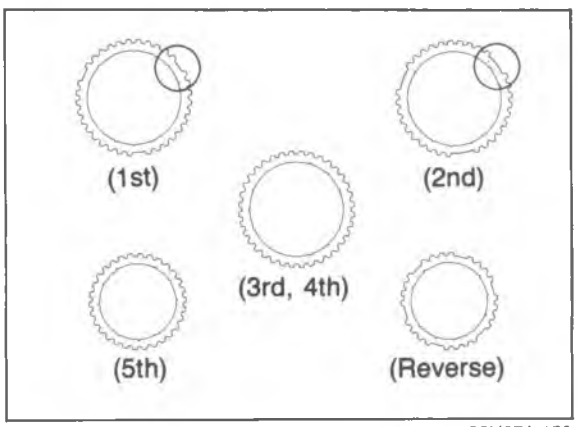

86U07A-158

Synchronizer ring

Note
The size of the 1st, 2nd, and 3rd/4th synchronizer rings is the same. Be careful when installing them. The 2nd ring has the larger cut-out as shown in the illustration.

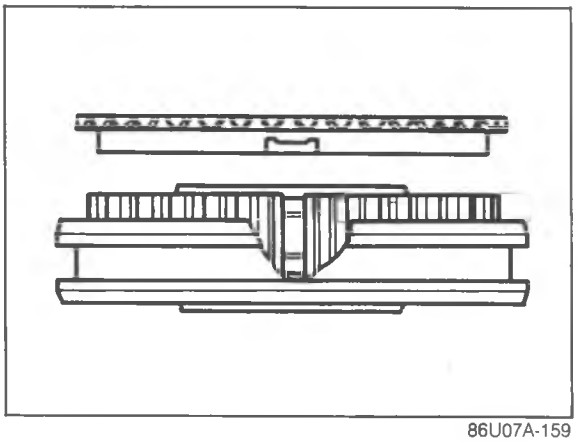

86U07A-159

Synchronizer ring and clutch hub assembly

Note
Align the synchronizer ring groove and clutch hub key when installing.

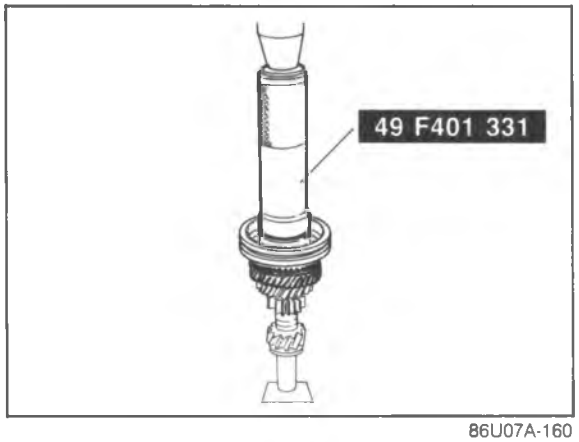

86U07A-160

Primary Shaft Gear

1. Install the needle bearing and the 3rd gear.

Note
Apply transaxle oil to the needle bearing.

2. Install the synchronizer ring and clutch hub assembly with the **SST**.

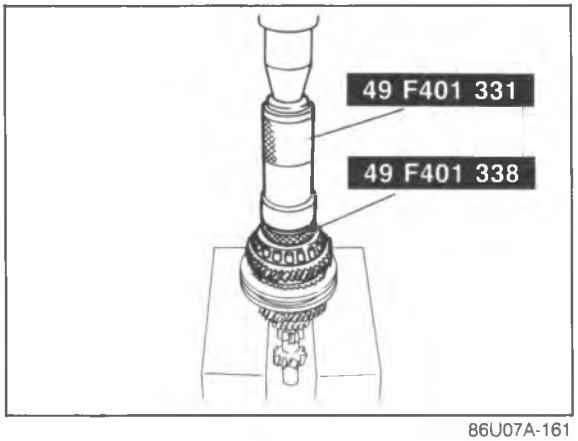

86U07A-161

3. Install the synchronizer ring.
4. Install the ball and gear sleeve.
5. Install the needle bearing and the 4th gear.

Note
Apply transaxle oil to the needle bearing.

6. Install the new bearing inner race with the **SST**.

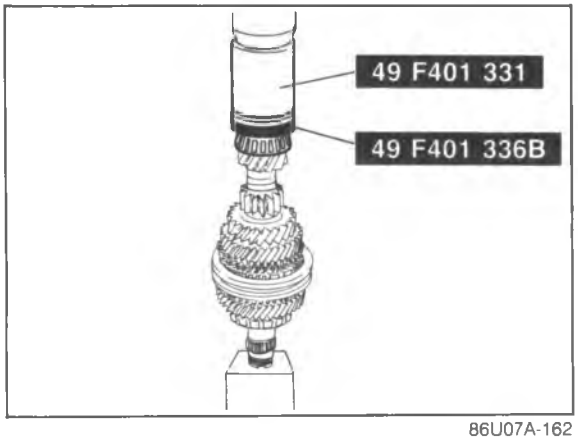

86U07A-162

7. Install the new bearing inner race with the **SST**.

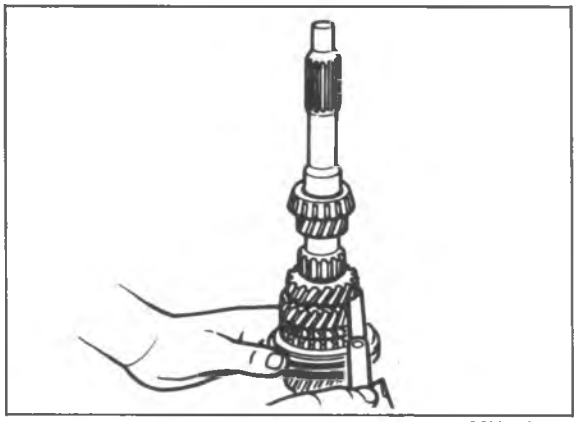

86U07A-163

8. Measure the clearance between the 3rd gear and primary shaft gear.
   If clearance is not within specification, replace any part which is worn or damaged.

   Clearance: 0.150—0.262 mm (0.059—0.0103 in)

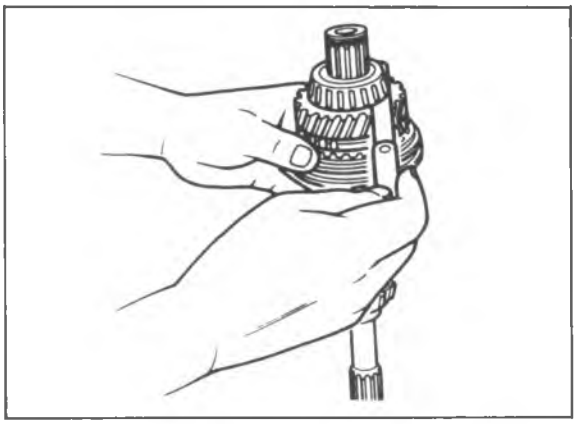

86U07A-164

9. Measure the clearance between the 4th gear and bearing inner race. If clearance is not within specification replace any part which is worn or damaged.

   Clearance: 0.150—0.262 mm (0.0059—0.0103 in)

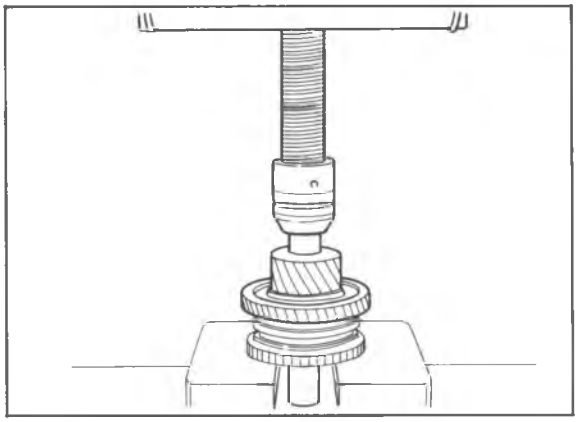

86U07A-165

Secondary Shaft Gear

1. Install the thrust washer.
2. Install the needle bearing and the 1st gear.

   Note
   Apply transaxle oil to the needle bearing.

3. Install the synchronizer ring (Refer to page 7A—63) and clutch hub assembly (reverse gear).

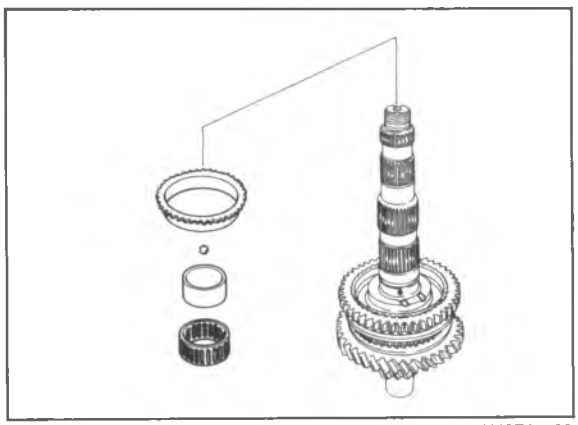

86U07A-166

4. Install the synchronizer ring.
5. Install the ball, gear sleeve and needle bearing.

   Note
   Apply transaxle oil to the needle bearing.

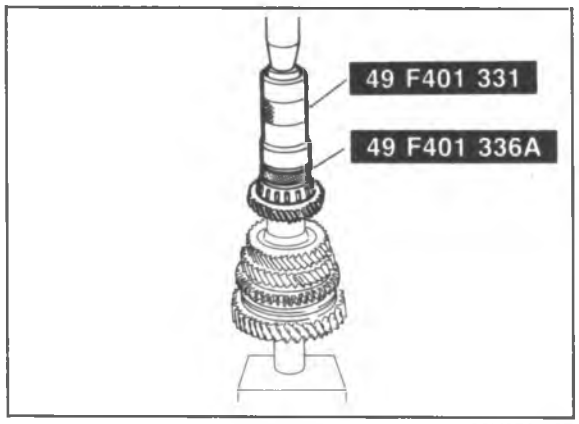

86U07A-167

6. Install the 3rd gear, the secondary 3rd gear, spacer and the secondary 4th gear.
7. Install the new bearing inner race with the **SST**.

Note
Check that the spacer does not rotate.

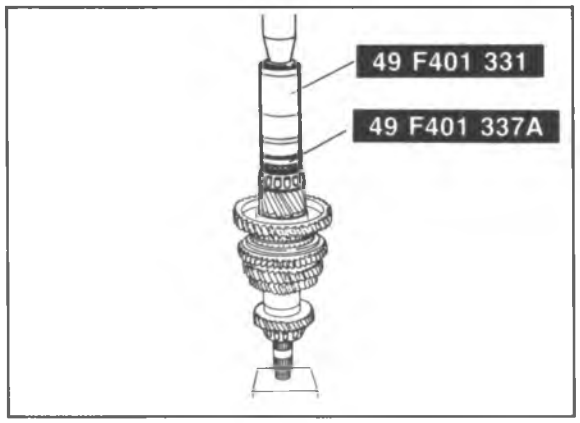

86U07A-168

8. Install the new bearing inner race with the **SST**.

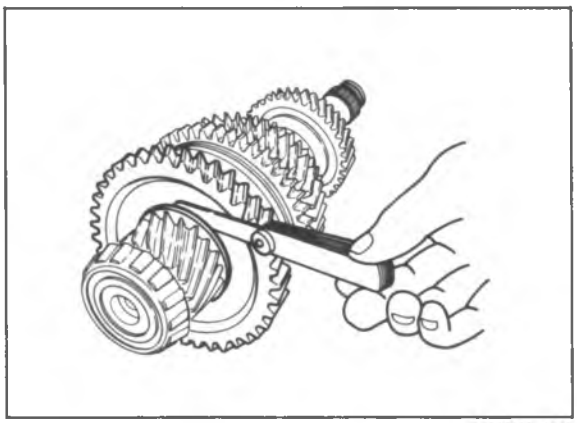
86U07A-169

9. Measure the clearance between the 1st gear and thrust washer.

Clearance: 0.130—0.354 mm (0.0051—0.0139 in)

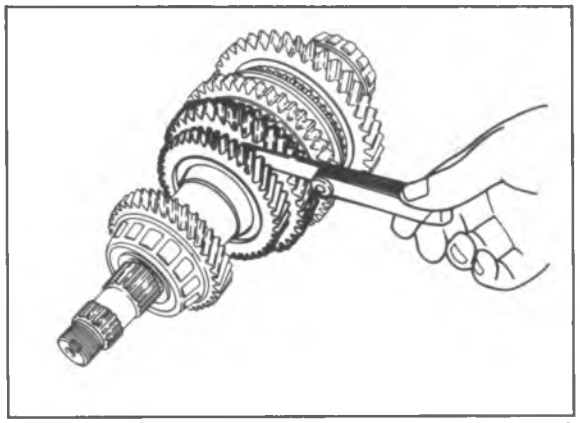
86U07A-170

10. Measure the clearance between the 2nd gear and secondary 3rd gear.
If clearance is not within specification, replace any part which is worn or damaged.

Clearance: 0.150—0.262 mm (0.0059—0.0103 in)

STEP 3
Torque Specifications

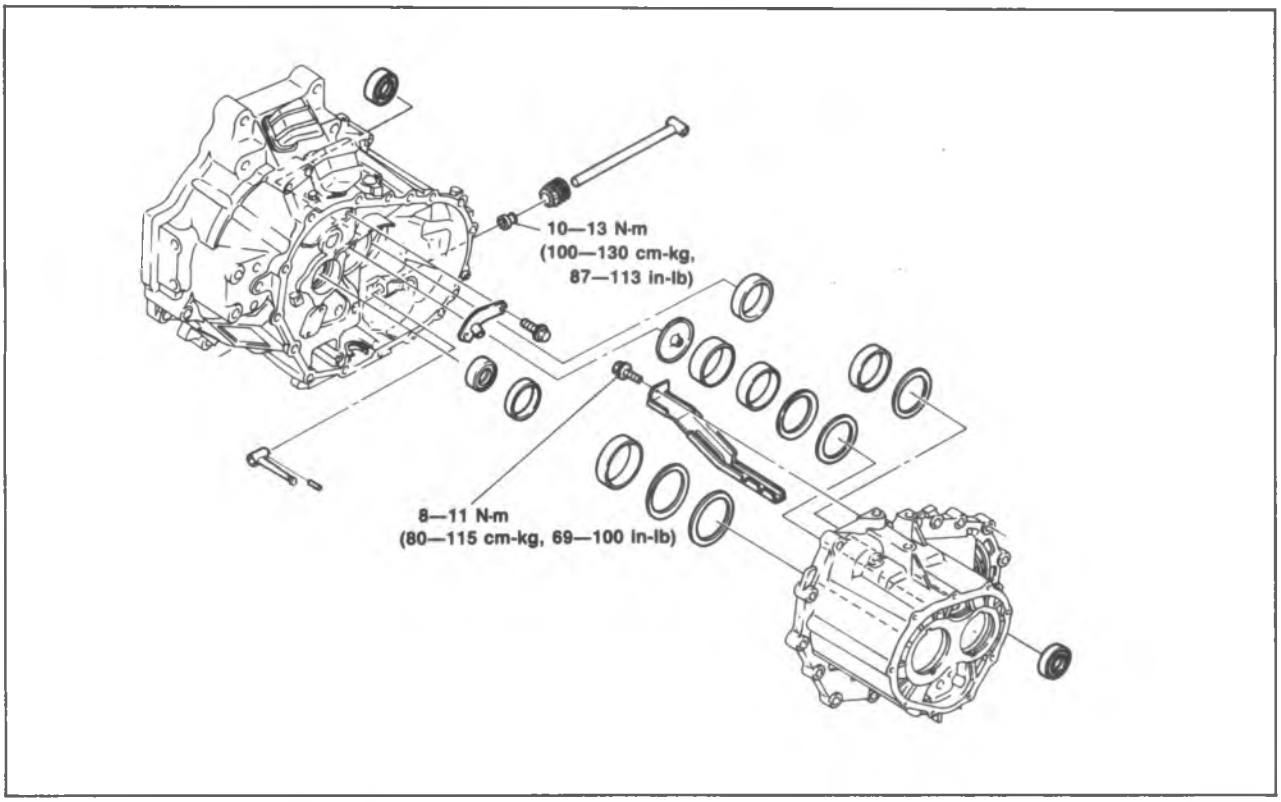

86U07A-171

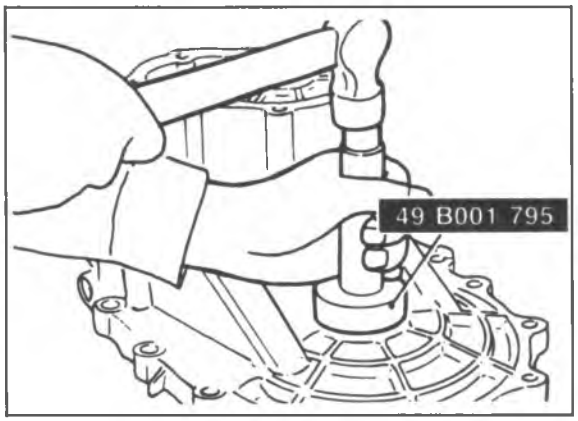

76G07A-638

Transaxle Case

1. Install the oil passage.

   Tightening torque: 8—11 N·m (80—115 cm-kg, 69—100 in-lb)

2. Install the new oil seal with the **SST**.

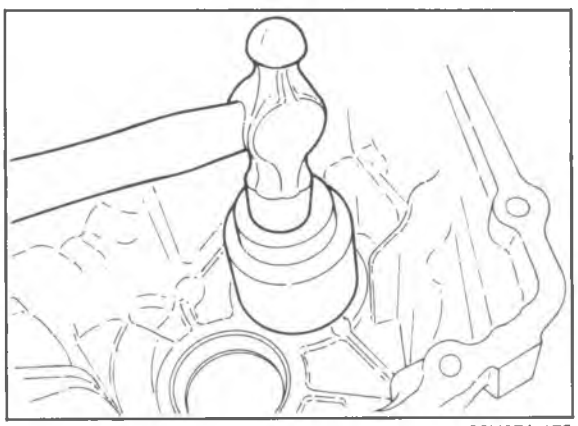

86U07A-173

3. Tap the primary and secondary shaft bearing outer races in until they are fully seated with a suitable pipe.

   Note
   Install the differential bearing outer race and diaphragm springs and adjust shims after adjusting the bearing preload.

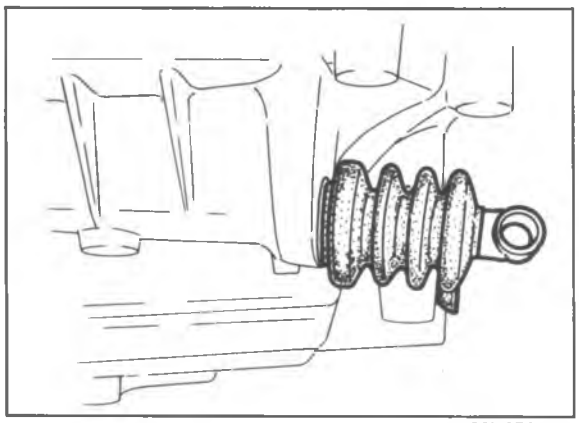

86U07A-174

Clutch Housing

1. Install the new oil seal (change rod) to clutch housing.
2. Install the change arm. boot and change rod.

Note
The boot should be installed as shown in the figure.

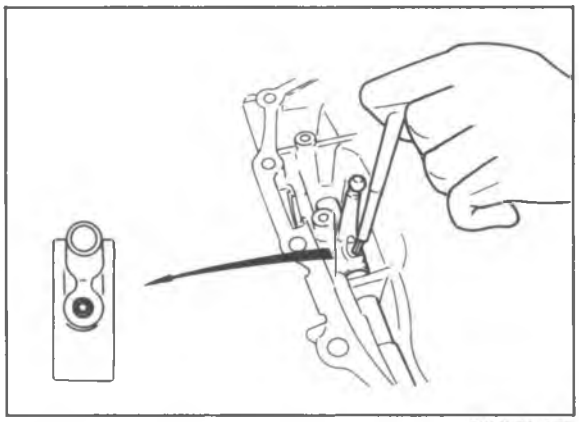

86U07A-175

3. Install the new roll pin as shown in the figure.

Note
Roll pin length is 28 mm (1.10 in)

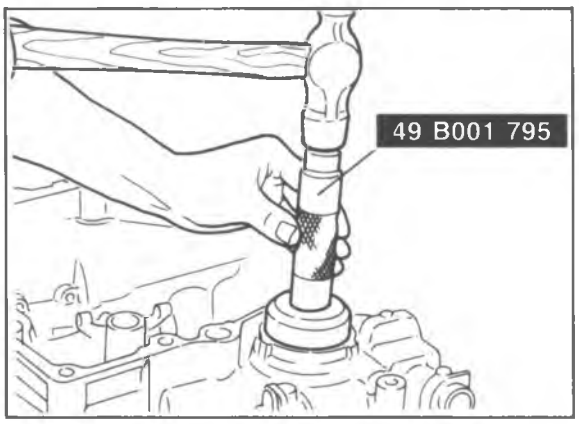

86U07A-176

4. Install the baffle plate.

Tightening torque: 10—13 N·m (100—130 cm-kg, 87—113 in-lb)

5. Tap the new oil seal (differential) with the **SST**.
6. Tap the new oil seal (primary shaft) with a suitable pipe.

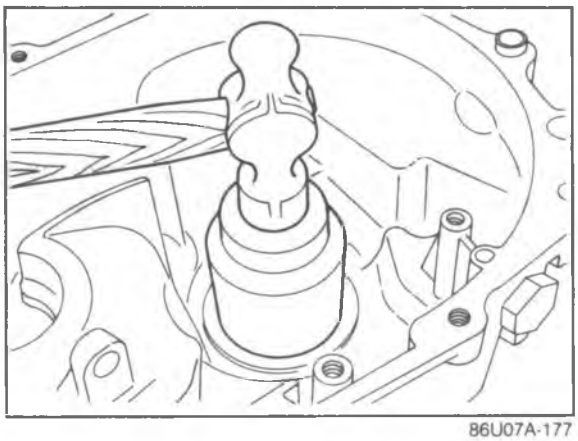

86U07A-177

7. Tap the differential bearing outer race in until it is fully seated with a suitable pipe.

Note
Install the primary and secondary shaft bearing outer races, after adjusting the bearing preload.

Bearing Preload Adjustment

When any of following parts are replaced, the bearing preload should be checked and adjusted.

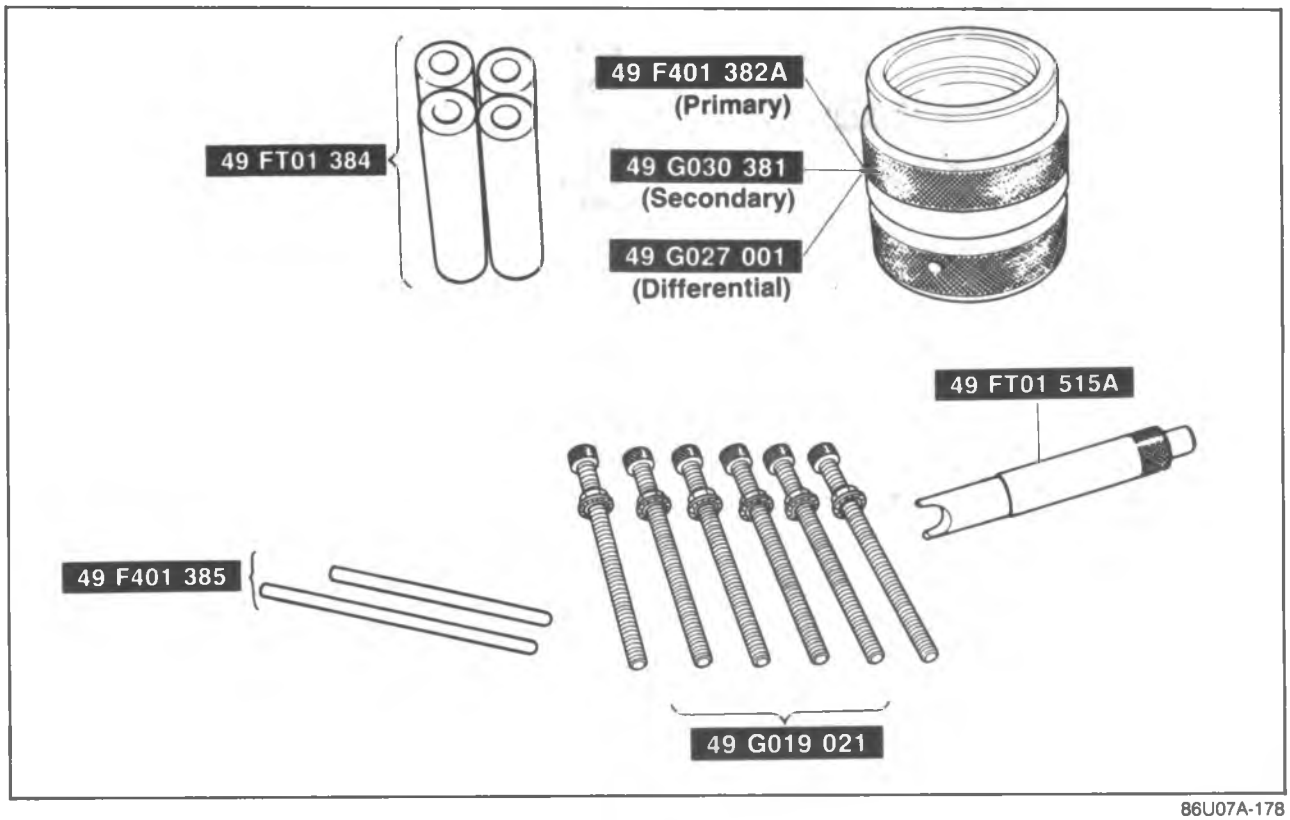

86U07A-178

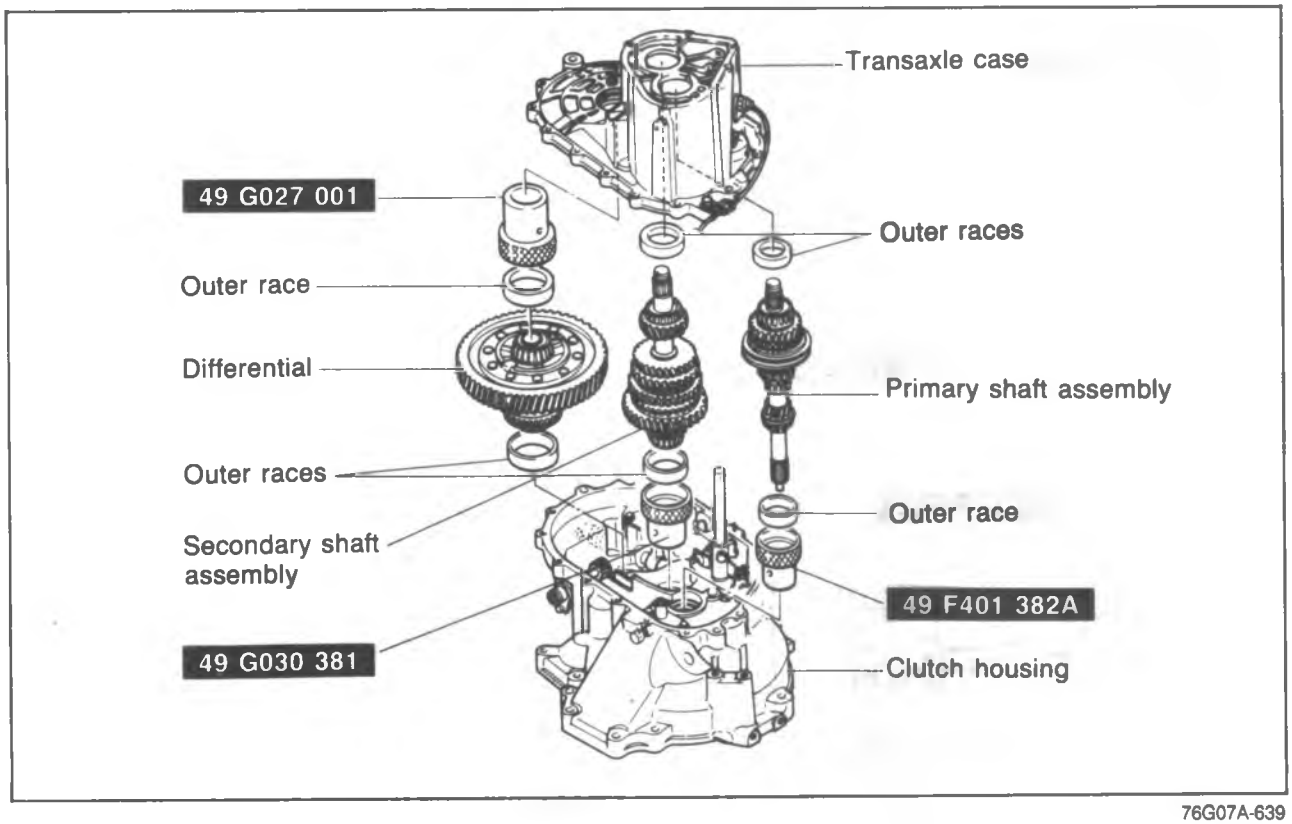

76G07A-639

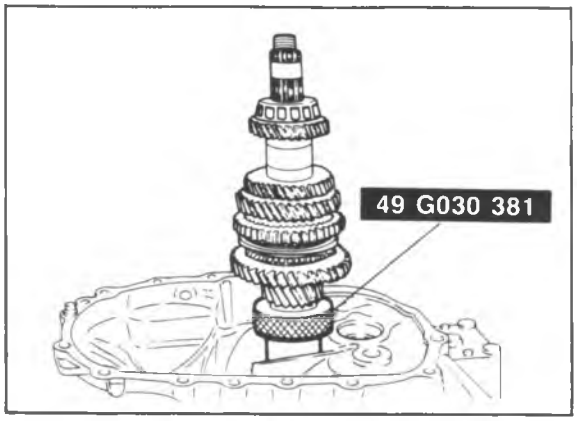

76G07A-640

1. Put the outer race into the **SST**.
2. Mount the secondary shaft gear assembly as shown.

Note
The secondary shaft selector touches the differential gear, so the secondary shaft bearing preload adjustment should be done separately from for the primary shaft and differential assembly.

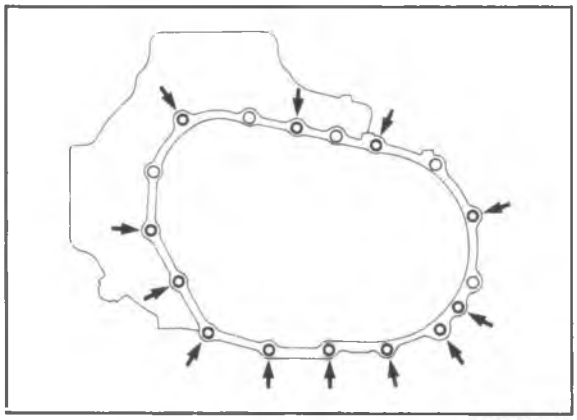

76G07A-641

Note
Install with the SST in the positions in the figure.

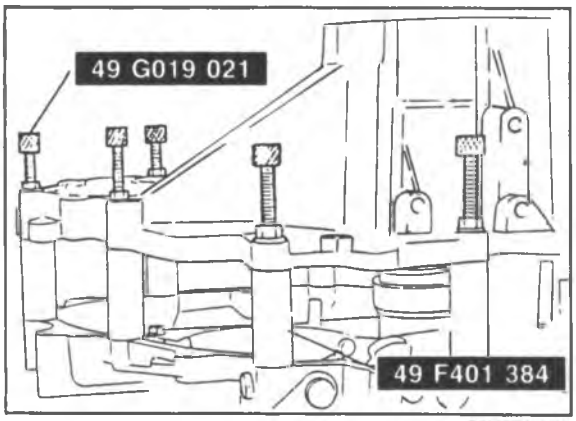

86U07A-181

3. Install the transaxle case and set the **SST**.

Tightening torque: 37—52 N·m (3.8—5.3 m-kg, 27—38 ft-lb)

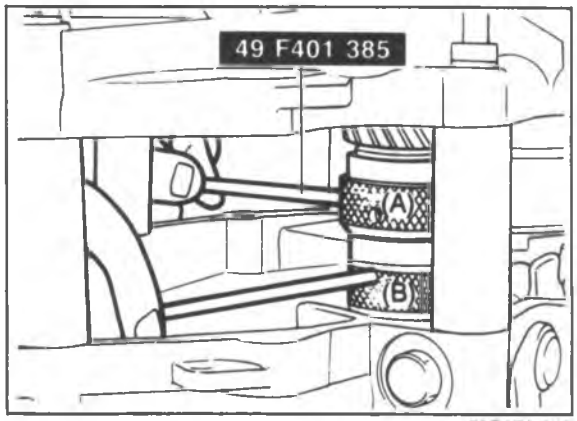

76G07A-642

4. To seat the bearings, mount the **SST** on parts (A) and (B) of the selector, and then turn the selector so the gap is widened.
   Move the bar by hand until the selector can no longer be turned, and then turn it in the reverse direction until the gap is eliminated.
5. Manually expand the selector until the selector no longer turns.

Note
Check that each shaft turns smoothly.

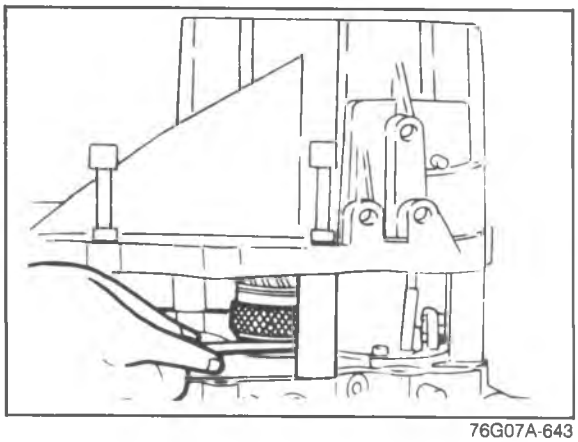

76G07A-643

6. Use a thickness gauge to measure the gap of the selector.

Note
Measure the gap around the entire circumference of the selector.

Thickness (Primary and Secondary)	
0.25 mm (0.010 in)	0.55 mm (0.024 in)
0.30 mm (0.012 in)	0.60 mm (0.026 in)
0.35 mm (0.014 in)	0.65 mm (0.028 in)
0.40 mm (0.016 in)	0.70 mm (0.030 in)
0.45 mm (0.018 in)	0.75 mm (0.032 in)
0.50 mm (0.020 in)	0.80 mm (0.034 in)

76G07A-644

7. Select the shim for the shaft gear by referring to the table and selecting the shim which is nearest (on the thick or thin side as shown) to the value obtained when subtracting the thickness of the diaphragm spring which gose between the shim and the race, from the measurement of the gap in the **SST**.

Secondary shaft
Example: 1.18 mm (0.046 in)
1.18 mm (0.046 in) — 0.70 mm (0.028 in) = 0.48 mm (0.0919 in) [Diaphragm spring]

So the nearest shim (on the thick side) to 0.48 mm (0.019 in) is 0.50 mm (0.020 in).

Note
Use a maximum of two shims.

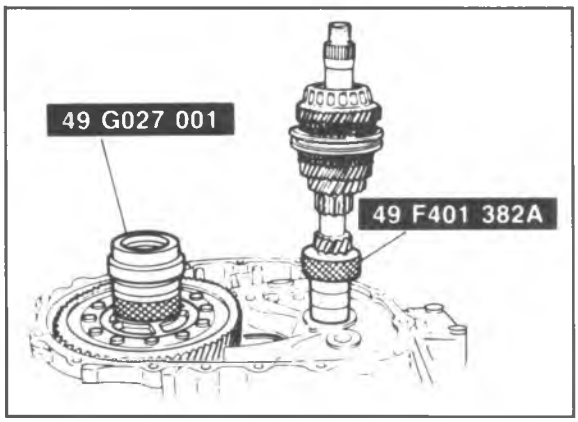

76G07A-645

8. Remove the **SST** and the transaxle case.
9. Mount the differential assembly, the primary shaft gear assembly and the **SST** as shown in the figure.
10. Adjust the primary shaft preload in the same manner as that of the secondary shaft.

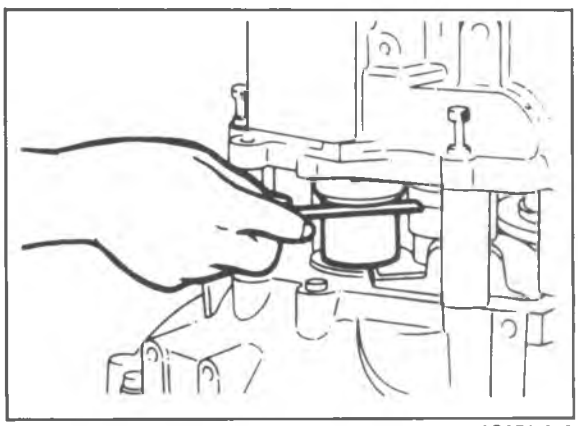

76G07A-646

Primary shaft
Example: 1.18 mm (0.046 in)
1.18 mm (0.046 in) — 0.70 mm (0.028 in) = 0.48 mm (0.019 in) [Diaphragm spring]

So the nearest shim (on the thin side) to 0.48 mm (0.019 in) is 0.45 mm (0.018 in)

Note
Use a maximum of two shims.

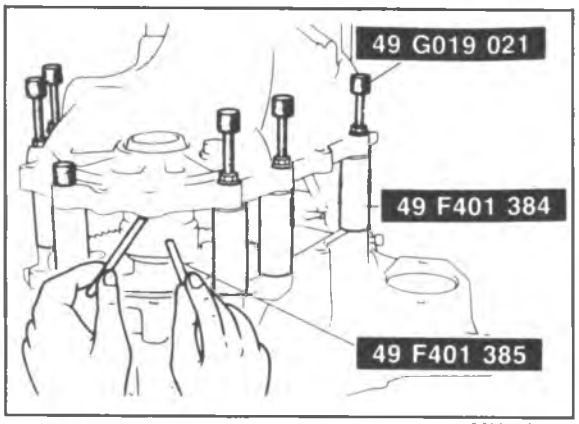

86U07A-189

11. Move the bars and expand the **SST** until it can no longer be turned, then turn it in the reverse direction until the gap is eliminated.

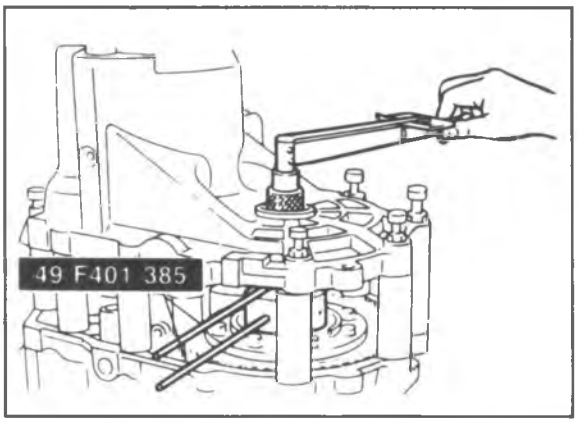

76G07A-619

12. Set the **SST**.
13. Expand the selector with the bar until preload specification is obtained.

    Preload: 0.5 N·m (5 cm-kg, 4.3 in-lb)

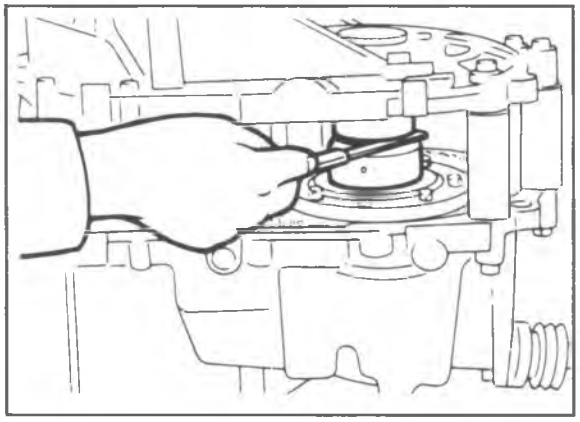

86U07A-191

14. Use a thickness gauge to measure the gap in the selector for both gears.

    Note
    Measure the gap around the entire circumference of the selector.

Thickness (Differential)	
0.10 mm (0.004 in)	0.70 mm (0.028 in)
0.15 mm (0.006 in)	0.75 mm (0.030 in)
0.20 mm (0.008 in)	0.80 mm (0.032 in)
0.25 mm (0.010 in)	0.85 mm (0.034 in)
0.30 mm (0.012 in)	0.90 mm (0.036 in)
0.35 mm (0.014 in)	0.95 mm (0.038 in)
0.40 mm (0.016 in)	1.00 mm (0.040 in)
0.45 mm (0.018 in)	1.05 mm (0.042 in)
0.50 mm (0.020 in)	1.10 mm (0.044 in)
0.55 mm (0.022 in)	1.15 mm (0.046 in)
0.60 mm (0.024 in)	1.20 mm (0.048 in)
0.65 mm (0.026 in)	

86U07A-192

15. Add **0.15 mm (0.0059 in)** to the measured clearance and select the combination of shims closest in value to that measurement.
    See the table below for available shim sizes.

    Example: 0.32 mm (0.013 in)
    0.32 mm (0.013 in) + 0.15 mm (0.0059 in) = 0.47 mm (0.019 in).
    So the nearest shim (on the thick side) to 0.47 mm (0.019 in) is 0.50 mm (0.020 in).

    Note
    Use a maximum of two shims.

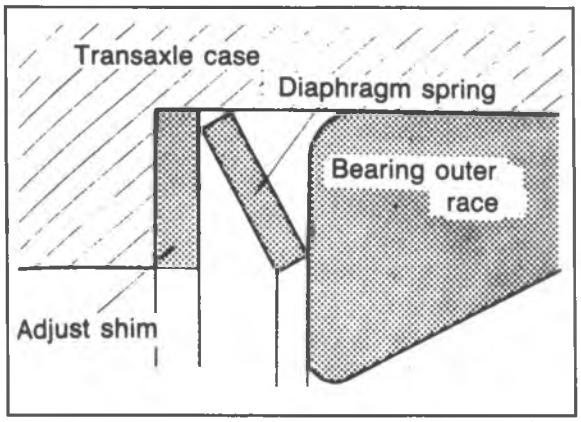

86U07A-193

Rechecking of Bearing Preload

1. Remove the **SST** and transaxle.
2. Remove the bearing outer races from the transaxle case.
3. Install the primary and secondary adjust shims, diaphragm springs and bearing outer races to the case as shown in the figure.
4. Install the differential adjust shim(s) and bearing outer race to the case.
5. Install the primary and secondary bearing outer races to the clutch housing.

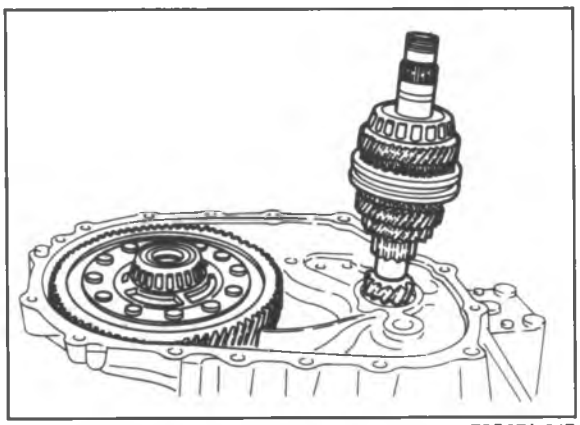
76G07A-647

6. Install the primary shaft gear assembly and the differential assembly.
7. Install the transaxle case and tighten the specified torque.

   Tightening torque: 37—52 N·m (3.8—5.3 m-kg, 27—38 ft-lb)

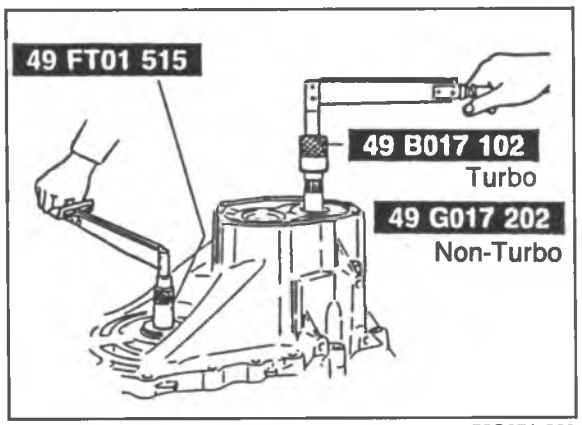

76G07A-620

8. Connect the **SST**.
9. Check that the preload is within the specified range.

   Primary shaft: 0.1—0.25 N·m (1.0—2.5 cm-kg, 0.87—2.17 in-lb)

   Differential: 1.4—2.0 N·m (14—20 cm-kg, 12.1—17.3 in-lb)

86U07A-196

10. Check secondary shaft preload in the same manner as that of the primary shaft.

    Secondary shaft: 0.2—0.4 N·m (2.0—4.0 cm-kg, 1.72—3.46 in-lb)

STEP 4
Torque Specification

86U07A-197

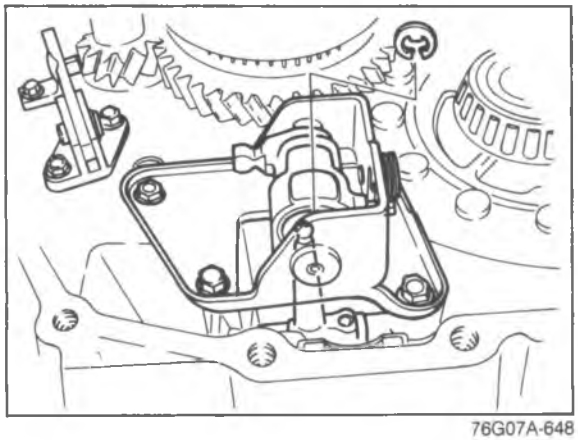

76G07A-648

Assembly

1. Install the lever set spring and the reverse shift lever.

   Tightening torque:
   8—11 N·m (80—110 cm-kg, 69—95 in-lb)

2. Install the differential assembly, the secondary shaft gear assembly and the primary shaft gear assembly.
3. Install the base plate unit, the crank lever assembly and the crank lever shaft.

   Tightening torque:
   8—11 N·m (80—110 cm-kg, 69—95 in-lb)

4. Install the snap ring.

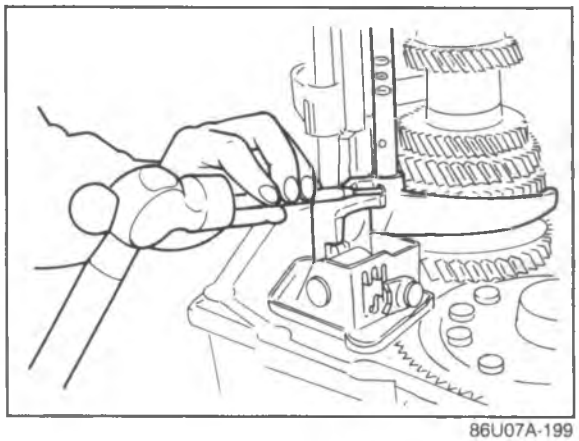

86U07A-199

5. Install the shift rod and the shift fork (1st/2nd).
6. Shift to the 2nd gear.
7. Install the roll pin.

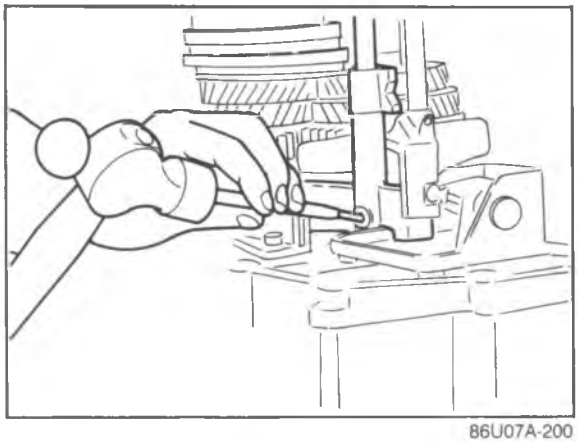

86U07A-200

8. Install the interlock pin to shift rod (5th/Rev.)
9. Install the shift rod end the shift rod (5th/Rev.).
10. Install the roll pin.

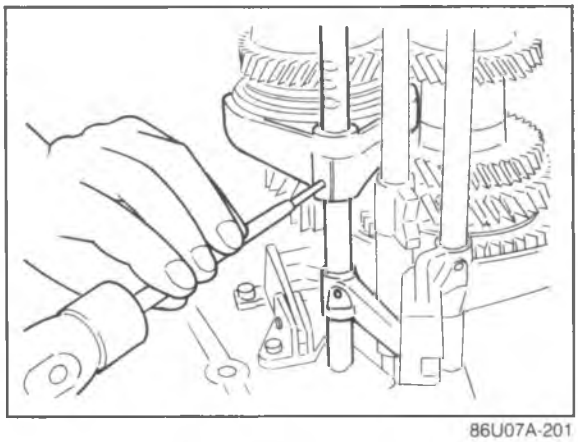

86U07A-201

11. Install the shift rod end, the shift rod and the shift fork (3rd/4th).

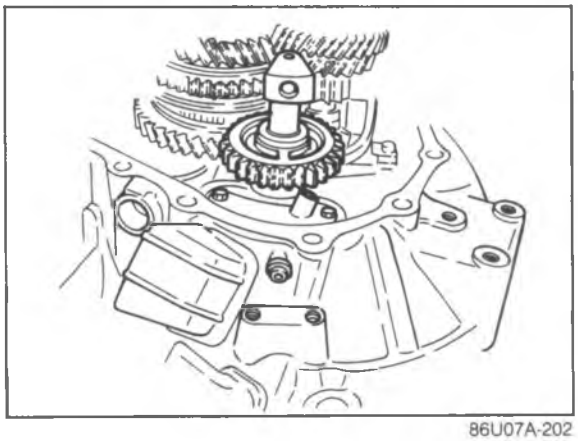

86U07A-202

12. Set the reverse idle gear and the reverse idle shaft in the direction shown.

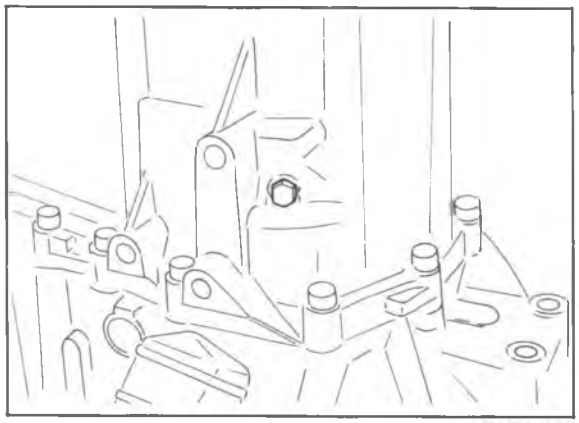

86U07A-203

13. Install the magnet.
14. Coat both surfaces with sealant and install the transaxle case and the engine mount bracket.

Note
Before coating with sealant, clean the contact surfaces.

Tightening torque: 37—52 N·m (3.8—5.3 m-kg, 27—38 ft-lb)

15. Install the engine mounting bracket.

Tightening torque: 78—117 N·m (8.0—11.9 m-kg, 58—86 ft-lb)

16. Install the reverse idle shaft set bolt.

Tightening torque: 18—26 N·m (1.8—2.6 m-kg, 13—19 ft-lb)

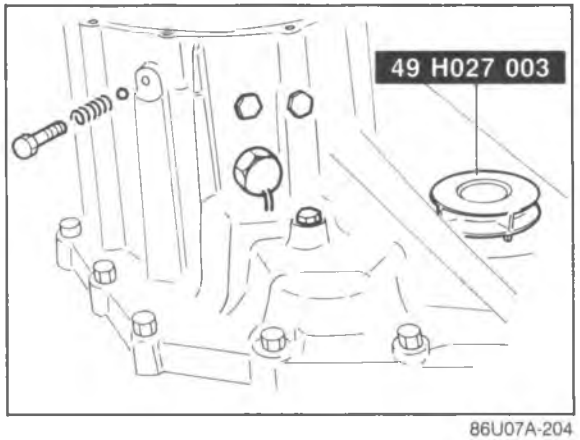

86U07A-204

17. Install the **SST**.
18. Install the balls, springs and bolts.
19. Install the reverse switch.

Tightening torque (bolts and switch): 20—29 N·m (2.0—3.0 m-kg, 14—22 ft-lb)

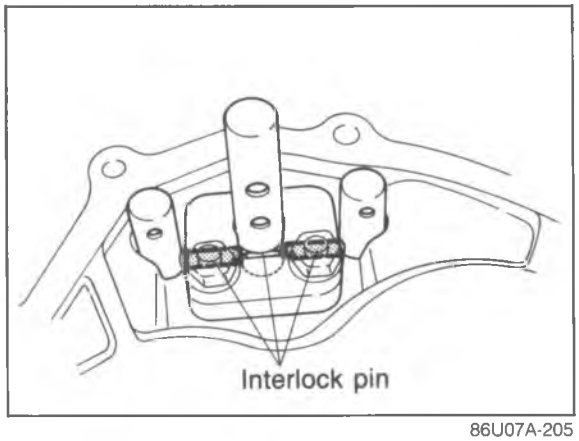

86U07A-205

20. Install the interlock pins.
21. Install the interlock plate.

Tightening torque: 18—26 N·m (1.8—2.6 m-kg, 13—19 ft-lb)

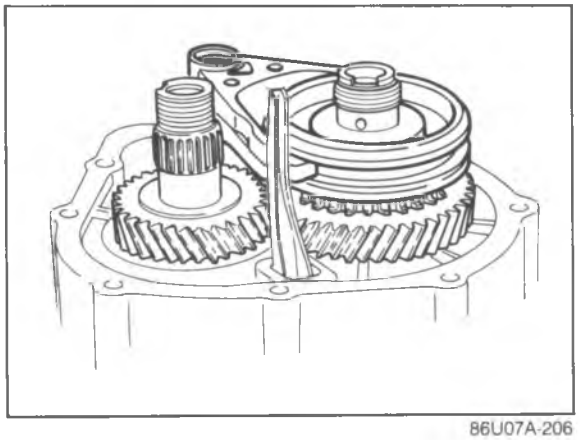

86U07A-206

22. Install the ball, gear sleeve, needle bearing.

Note
Apply the transaxle oil to needle bearing.

23. Install the 5th gear and synchronizer ring.
24. Install the secondary 5th gear.
25. Install the clutch hub assembly and shift fork together.

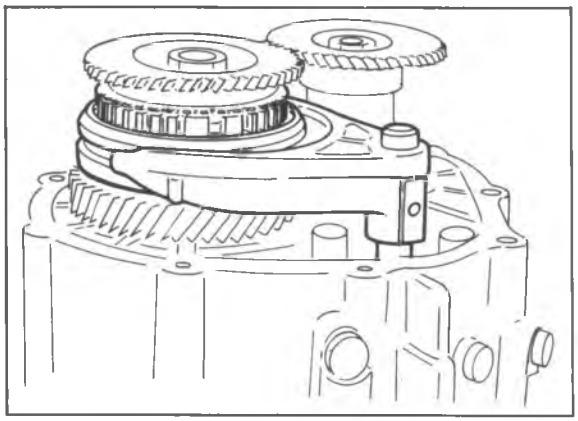

86U07A-207

26. Install the synchronizer ring, gear the primary reverse synchronizer gear, sleeve and the secondary reverse synchronizer gear.
27. Shift to the 5th gear and the 1st gear.
28. Tighten the lock nuts and stake it.

    Tightening torque: 128—196 N·m (13.0—20.0 m-kg, 94—145 ft-lb)

29. Shift to the neutral.
30. Install the roll pin to the shift fork (5th/Rev.).

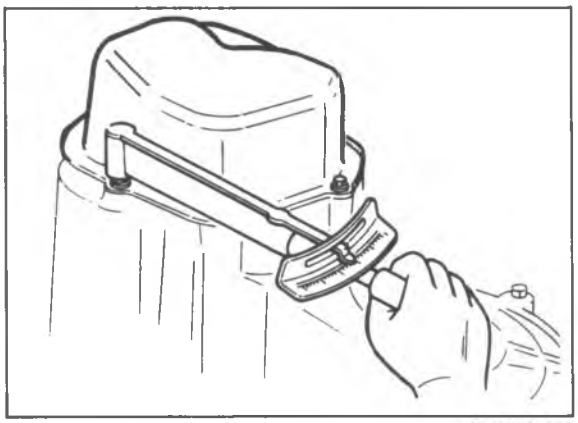

76U07A-649

31. Coat both surface with sealant.

    Note
    Before coating with sealant, clean the contact surfaces.

32. Install the rear cover.

    Tightening torque: 8—11 N·m (80—115 cm-kg, 69—100 in-lb)

33. Install the neutral switch.

    Tightening torque: 20—29 N·m (2.0—3.0 m-kg, 14 —22 ft-lb)

34. Install the drain plug.

    Tightening torque: 39—59 N·m (4.0—6.0 m-kg, 29—43 ft-lb)

INSTALLATION

Torque Specifications

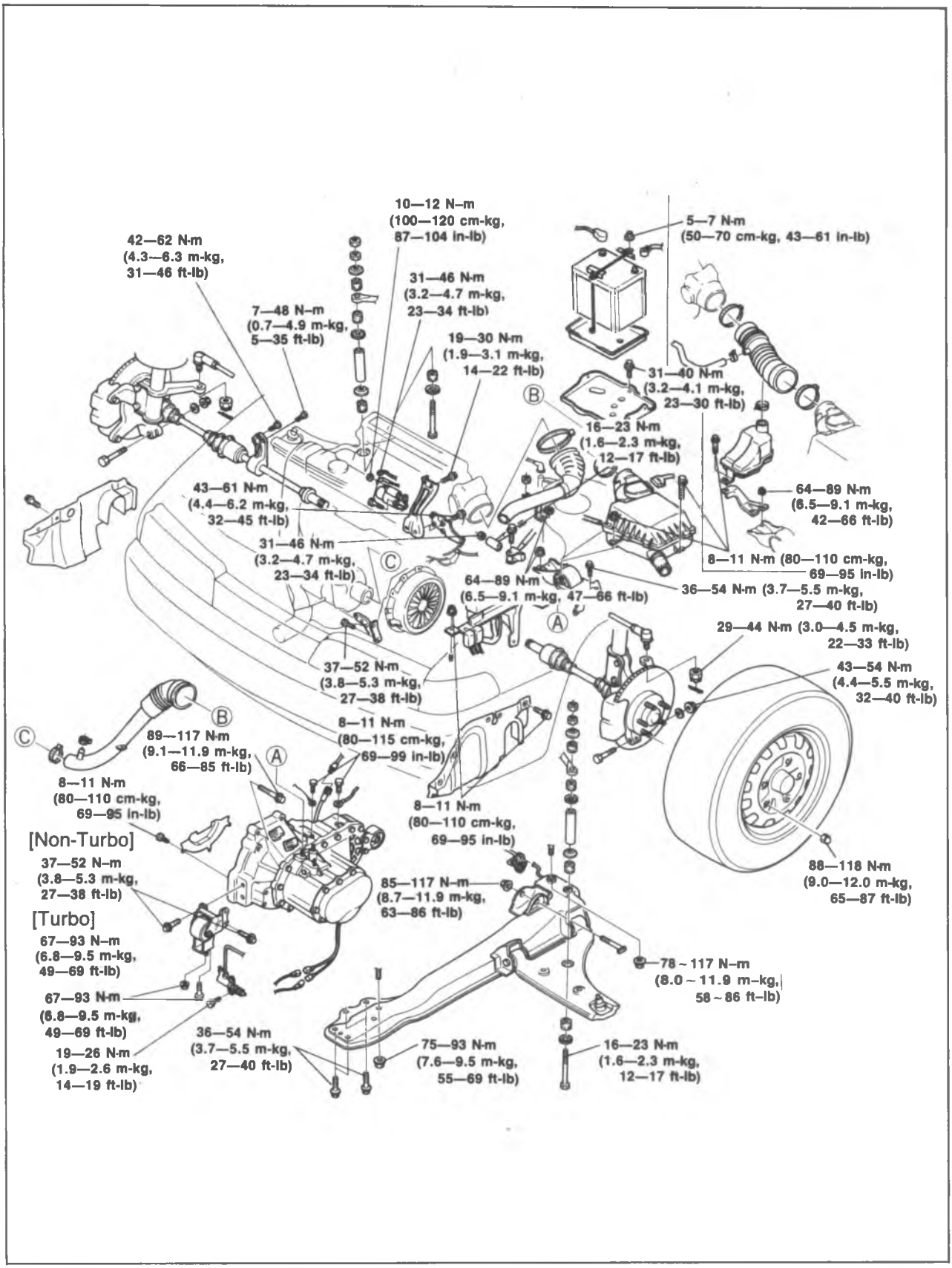

86U07A-209

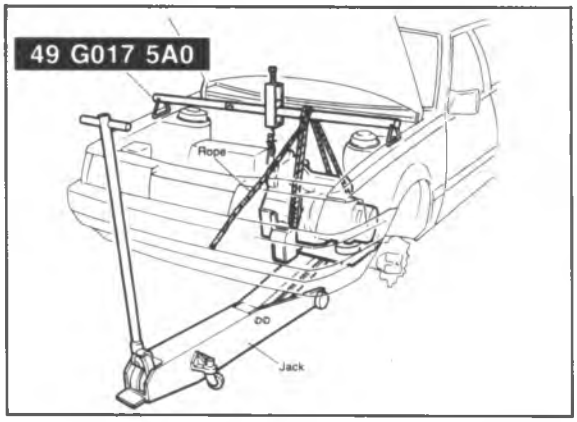

86U07A-210

1. Attach rope at 2 places on the transaxle and place a board on the jack and position the transaxle on it.

Caution
The transaxle is not well balanced; be careful when positioning on the jack.

2. Move the transaxle into the place and attach the rope (attached to the transaxle in step 1) to the **SST**.

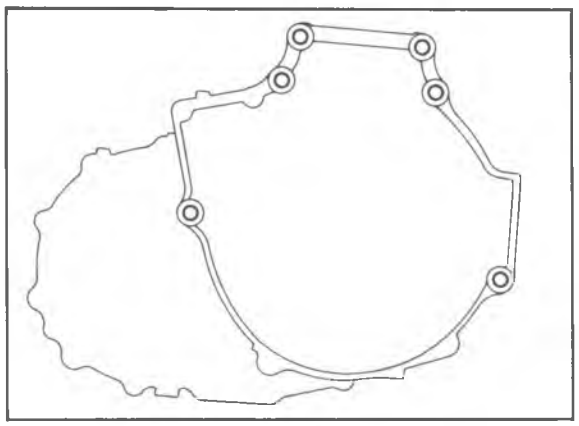
86U07A-211

3. Install the transaxle onto the engine.

Note
Lift the transaxle using the jack pulling the rope.

Tightening torque: 89—117 N·m
(9.1—11.9 m-kg, 66—85 ft-lb)

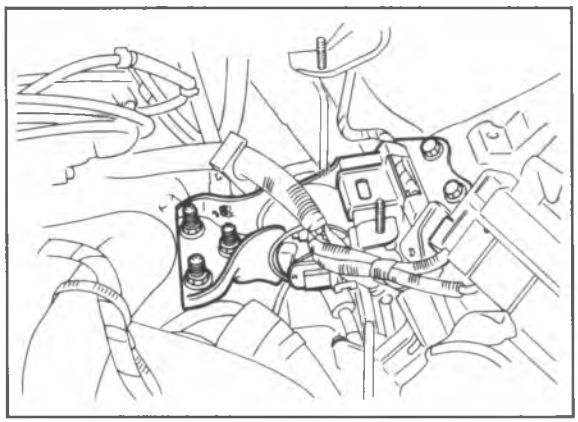
86U07A-212

4. Install the engine mount No. 4 and braket.

Tightening torque: 85—117 N·m
(8.7—11.9 m-kg, 63—86 ft-lb)

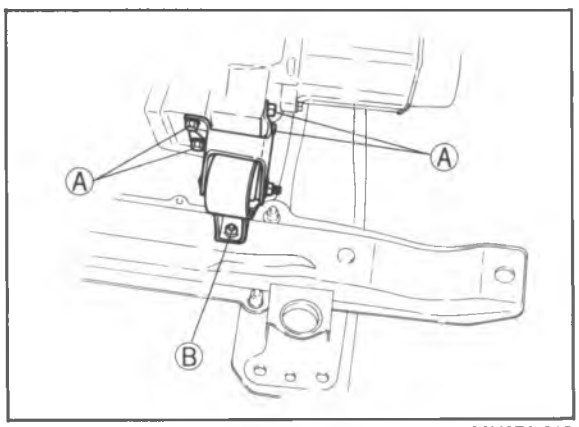

86U07A-213

5. Install the engine mount No. 2.

Tightening torque:
Ⓐ, Non Turbo 37—52 N·m
(3.8—5.3 m-kg, 27—38 ft-lb)
Turbo 67—93 N·m
(6.8—9.5 m-kg, 49—69 ft-lb)
Ⓑ, 67—93 N·m
(6.8—9.5 m-kg, 49—69 ft-lb)

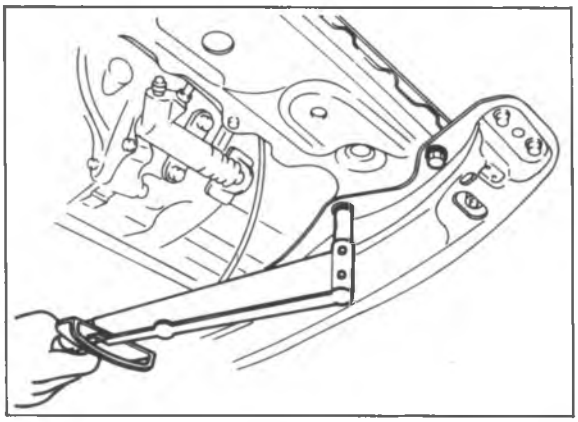

86U07A-214

6. Install the crossmember and the left side lower arm as an assembly.

   Tightening torque: Bolts, 36—54 N·m (3.7—5.5 m-kg, 27—40 ft-lb)
   Nut, 75—93 N·m (7.6—9.5 kg, 55—69 ft-lb)

7. Remove the jack and take of the rope.
8. Remove the **SST**.

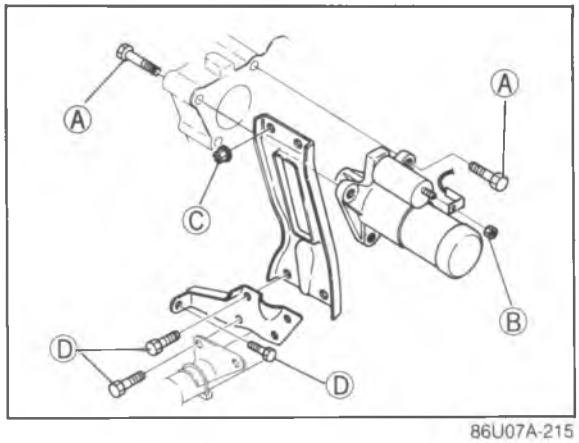

86U07A-215

9. Install the starter and harnesses.

   Tightening torque:
   Ⓐ. 31—46 N·m (3.2—4.7 m-kg, 23—34 ft-lb)
   Ⓑ. 10—12 N·m (100—120 m-kg, 87—104 ft-lb)

10. Install the surge tank bracket and the gusset plate.

    Tightening torque:
    Ⓒ. 19—30 N·m (1.9—3.1 m-kg, 14—22 ft-lb)
    Ⓑ. 43—61 N·m (4.4—6.2 m-kg, 32—45 ft-lb)

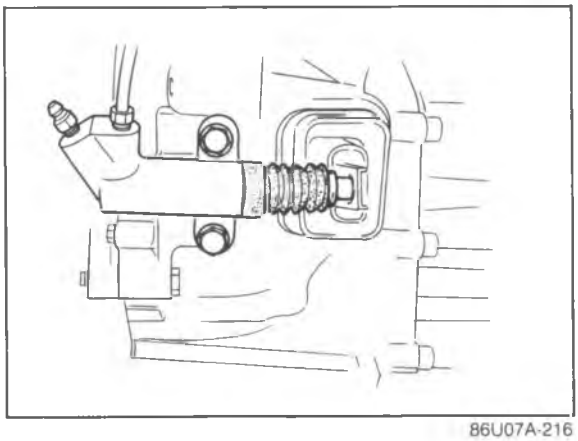

86U07A-216

11. Install the end plate.

    Tightening torque: 8—11 N·m (80—110 cm-kg, 69—95 in-lb)

12. Install the clutch release cylinder.

    Tightening torque: 19—26 N·m (1.9—2.6 m-kg, 14—19 ft-lb)

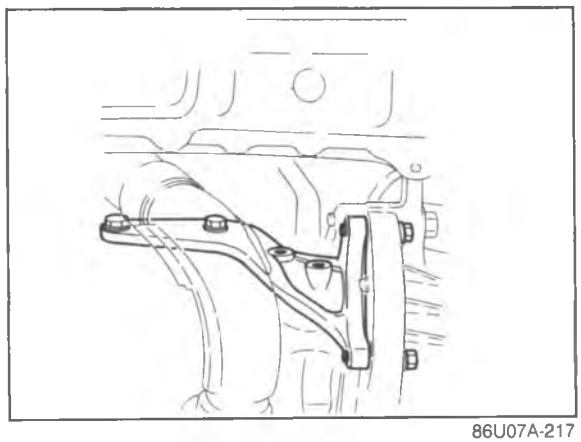

86U07A-217

13. Install the gusset plates.

    Tightening torque: 37—52 N·m (3.8—5.3 m-kg, 27—38 ft-lb)

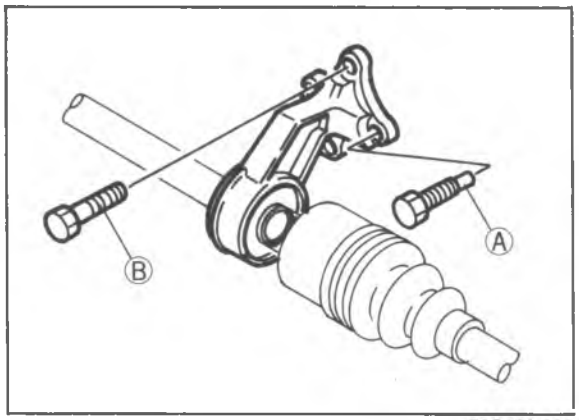

76G07A-650

14. Replace the clips at the end of the driveshafts and joint shaft with new ones.
15. Install the joint shaft and right driveshaft as follows:
    (1) Install and tighten the reamer bolts Ⓐ; then install and tighten the standard bolts Ⓑ.

Tightening torque:
Ⓐ :7—10 N·m
(70—100 cm-kg, 61—87 in-lb)
Ⓑ :42—62 N·m
(4.3—6.3 m-kg, 31—46 ft-lb)

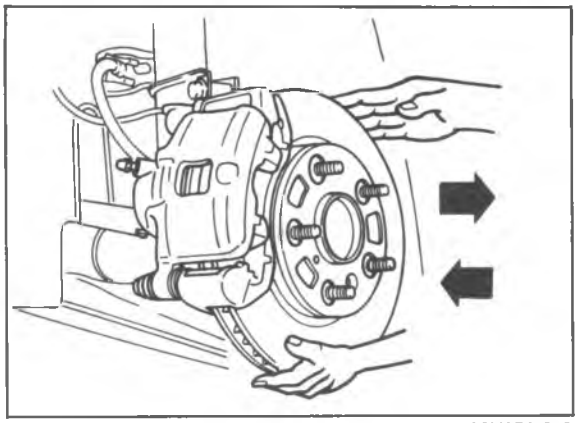
86U07A-219

(2) Remove the **SST** and insert the shaft into the transaxle.
(3) Pull the front hub outward and connect the driveshaft to the joint shaft.
(4) Push the joint at the differential side to securely connect the driveshaft to the joint shaft.

Note
a) After installation, pull the front hub outward to confirm that the driveshaft doesn't come out.
b) Do not damage the oil seal.

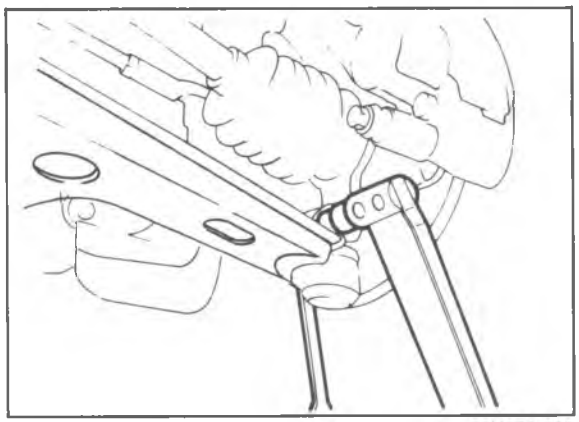
86U07A-220

16. Install the left driveshaft as follows:
    (1) Pull the front hub outward and insert the driveshaft into the transaxle.
    (2) Push the joint at the differential side to connect the driveshaft to the differential side gear.

Note
a) Do not damage the oil seal.
b) After installation, pull the front hub outward to confirm that the driveshaft doesn't come out.

17. Install the lower arm ball joints to the knuckles and tighten the bolts and nuts.

Tightening torque: 43—54 N·m
(4.4—5.5 m-kg, 32—40 ft-lb)

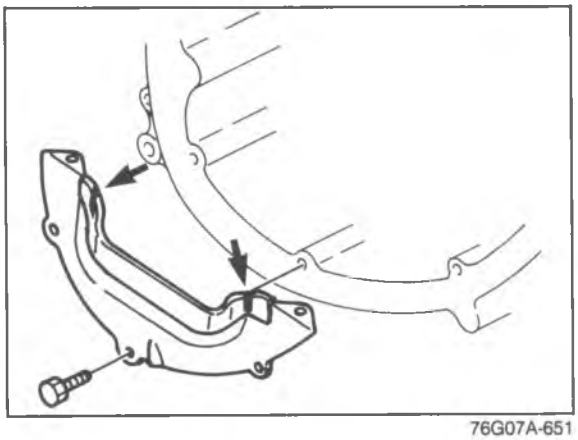
76G07A-651

18. Install the under cover.

Note
Before installation, fill the notches with silicon as shown in the figure.

Tightening torque: 8—11 N·m
(80—110 cm-kg, 69—95 ft-lb)

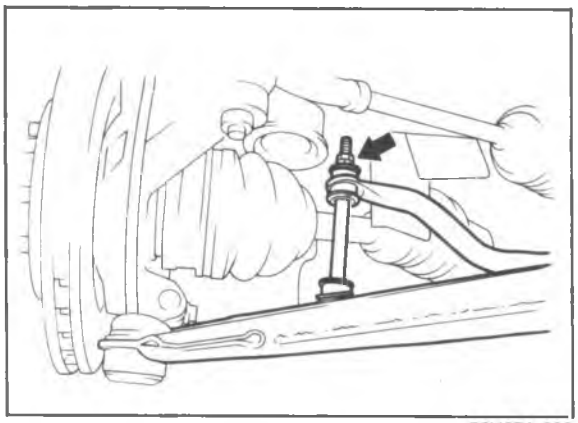

86U07A-222

19. Install the stabilizer bar control links as follows.
    (1) Install the stabilizer bar control link.
    (2) Adjust protrusion to 20.1 mm (0.79 in)
    (3) Tighten bolt to specified torque.

    Tightening torque: 16—23 N–m (1.6—2.3 m-kg , 12—17 ft-lb)

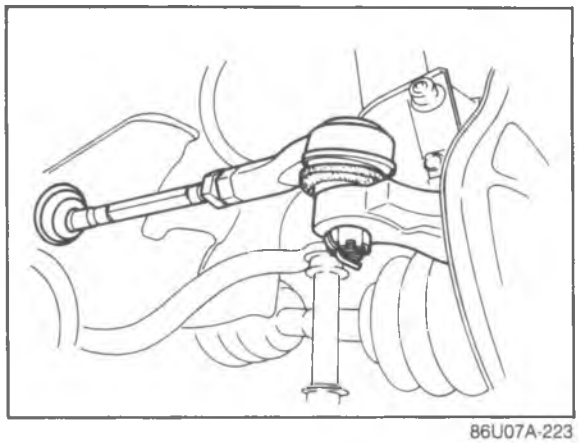

86U07A-223

20. Install the tie-rod ends and new cotter pin.

    Tightening torque: 29—44 N·m (3.0—4.5 m-kg, 22—33 ft-lb)

21. Install the splash shields.

    Tightening torque: 8—11 N·m (80—110 cm-kg, 69—95 in-lb)

22. Install the front wheels.

    Tightening torque: 88—118 N·m (9.0—12.0 m-kg, 65—87 ft-lb)

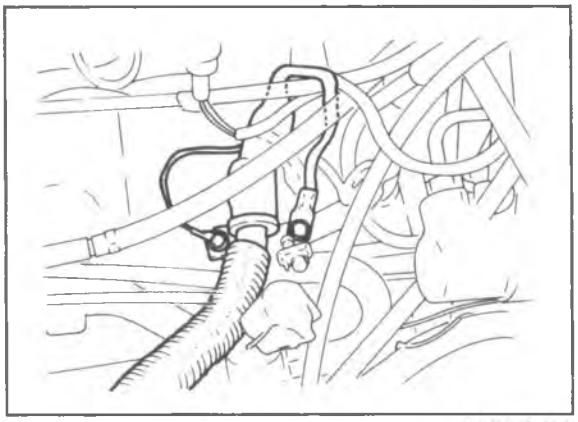

76G07A-652

23. Install the grounds to the transaxle case.

    Tightening torque: 8—11 N·m (80—115 cm-kg, 69—100 in-lb)

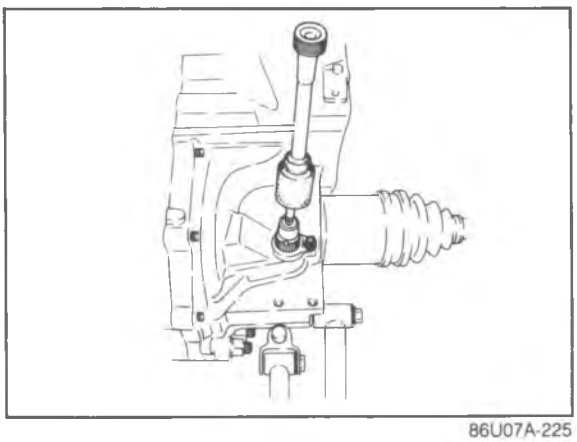

86U07A-225

24. Connect the speedometer cable.

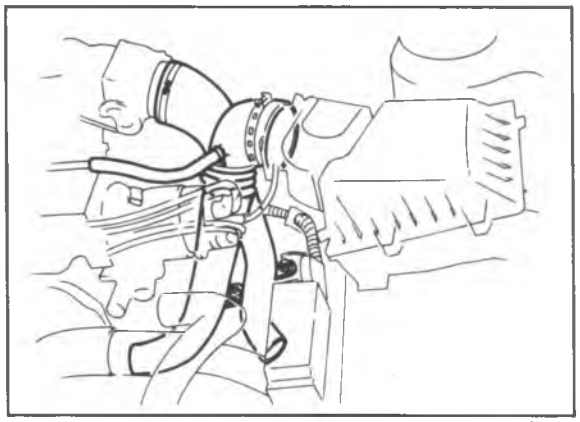

86U07A-226

25. Install the intercooler hoses as follows.
    (1) Air cleaner to turbocharger.
    (2) Inter cooler to throttle body.

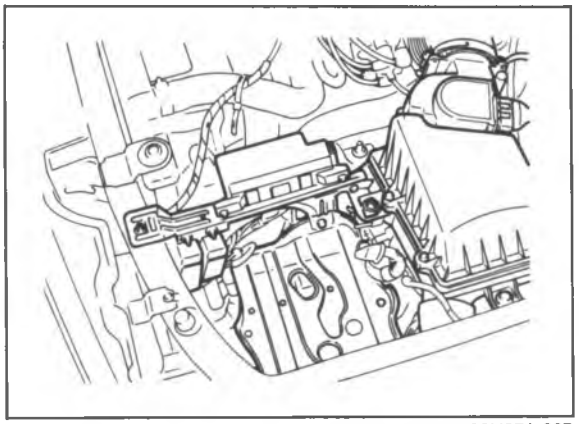

86U07A-227

26. Install the air cleaner assembly and connect the air flow meter connector.

    Tightening torque: 8—11 N·m (80—110 cm-kg, 69—95 in-lb)

27. Connect the distributor lead.
28. Connect the main fuse block.

    Tightening torque: 8—11 N·m (80—110 cm-kg, 69—95 in-lb)

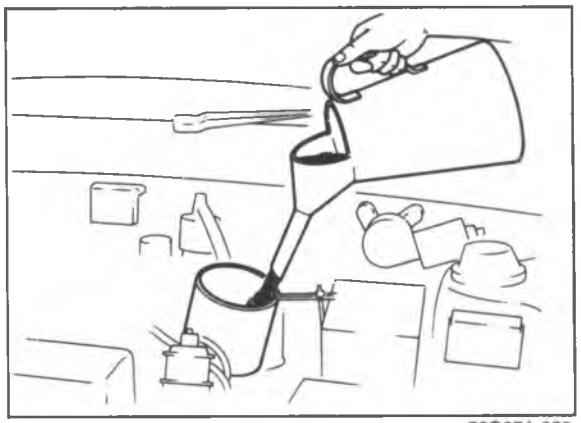

76G07A-653

29. Install the battery carrier and battery.
30. Add the correct quantity of the specified transaxle oil.

    Specified oil
    Type
    A.T.F.: DEXRON II
    Above 0°F:
    API: GL-4 or GL-5
    SAE 80W-90 or SAE 90

    Capacity:
    Non-Turbo. 3.35 liters (3.5 US qt, 3.0 Imp qt)
    Turbo. 3.65 liters (3.9 US qt, 3.3 Imp qt)

TRANSAXLE CONTROL

REMOVAL AND INSTALLATION

1. Jack up the vehicle and support it with safety stands.
2. Remove in the sequence shown in the figure.
3. Install in the reverse order of removal.

61G07X-165

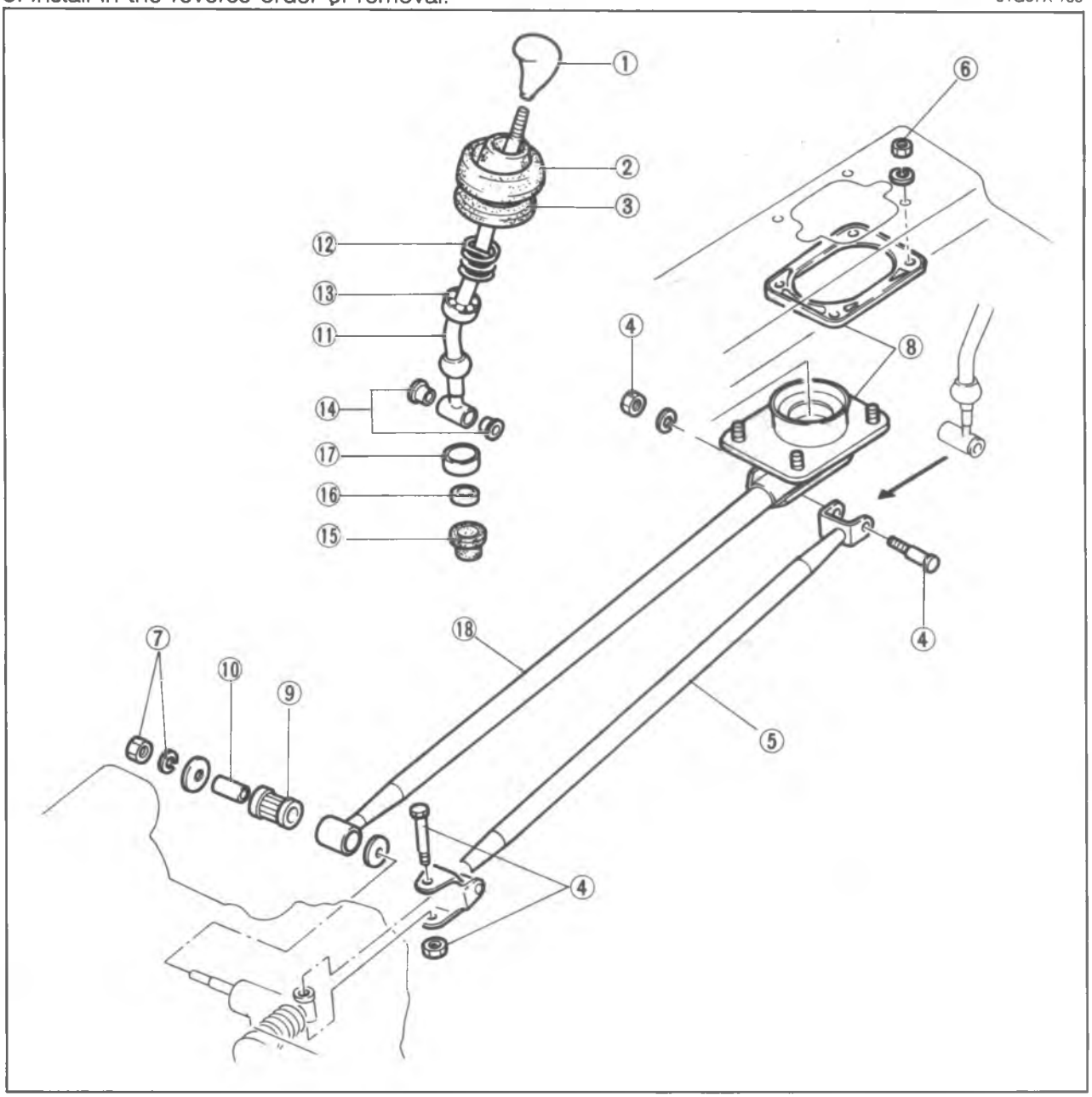

86U07A-230

1. Change lever knob
2. Assist boot
3. Mounting rubber boot
4. Bolts and nuts
5. Change control rod
6. Bracket installation nuts
7. Nut and washer
8. Extension bar bracket assembly and gasket
9. Bushing
10. Pipe
11. Change lever
12. Spring
13. Ball seat (upper)
14. Bushings
15. Boot
16. Holder
17. Ball seat (lower)
18. Extension bar

Note
Apply a coat of grease (lithium base, NLGI No. 2) to the change lever ball, the ball seats, and each joint.

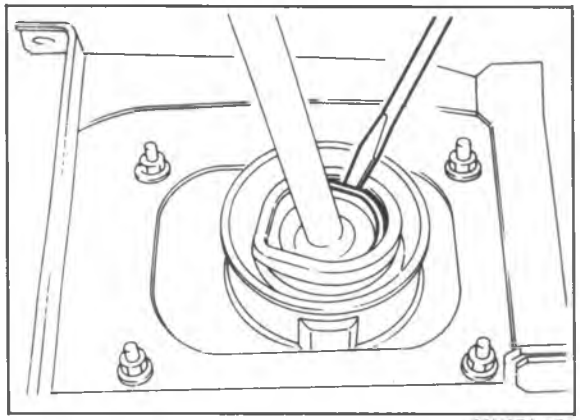

63U07A-151

Spring
Remove the spring by prying on the hooked part of the spring with a screwdriver.

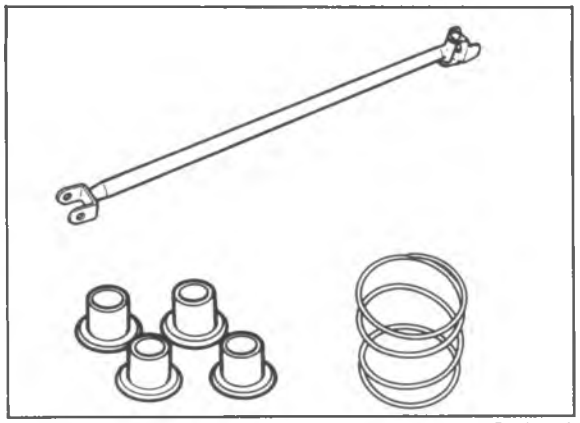

61G07X-192

INSPECTION
Check the following, and replace if necessary:
1. Bent control rod.
2. Wear, damage, or malfunction of any joint.
3. Damaged gear shift lever ball.
4. Weak spring.
5. Wear or damage of bushing.

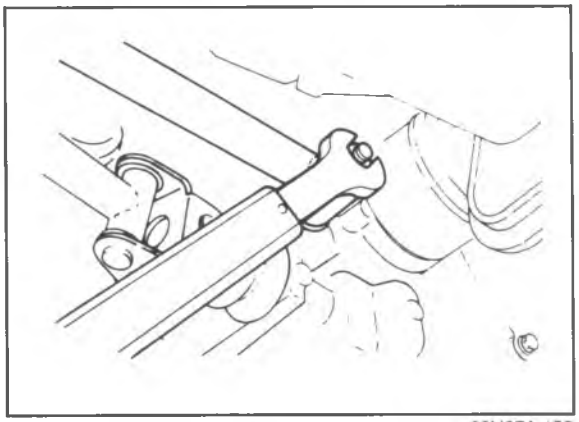

63U07A-153

INSTALLATION
Install in the reverse order of removal and note the following:
Extension Bar
First, install the extension bar to the floor, and then install it onto the transaxle.

Tightening torque:
31—46 N·m (3.2—4.7 m-kg, 23—34 ft-lb)

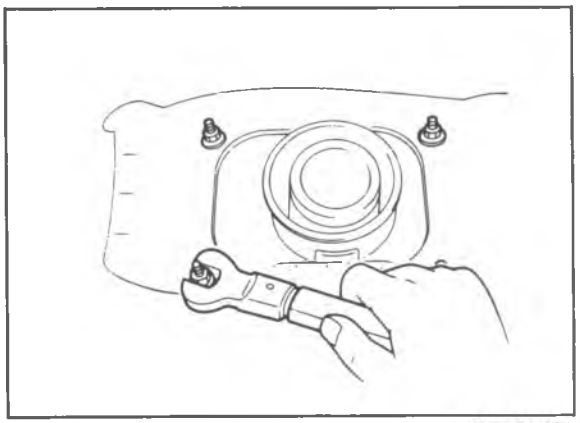

76G07A-654

Bracket Installation
Tighten the bracket installation nuts to the specified torque.

Tightening torque: 7—10 N·m
(70—100 cm-kg, 61—87 in-lb)

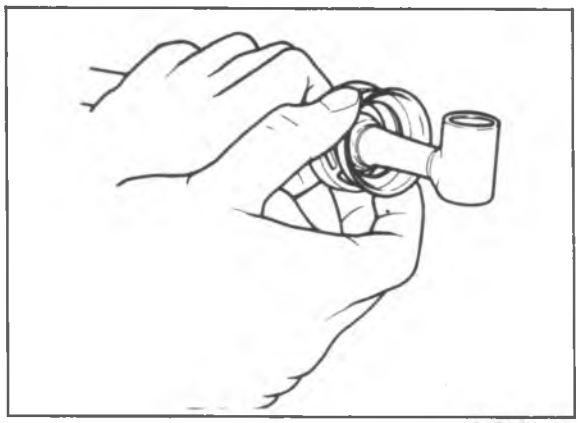

61G07X-193

Gear Shift Lever Ball
Apply grease to the ball seat surface, and install the upper and lower ball seat, holder, and boot.

Note
Apply grease to all joints.

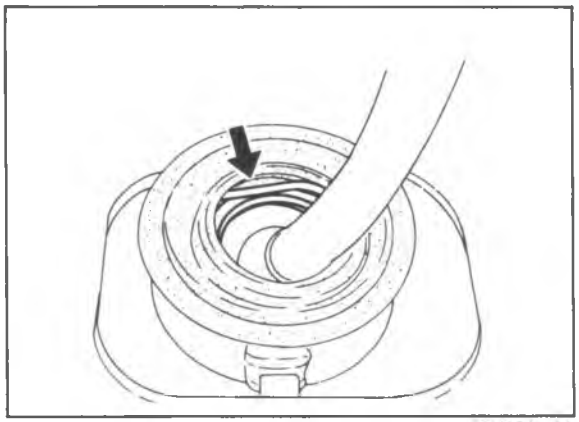

63U07A-156

Spring
Make sure that the hooked part of the spring is properly seated in the bracket groove, as shown in the figure.

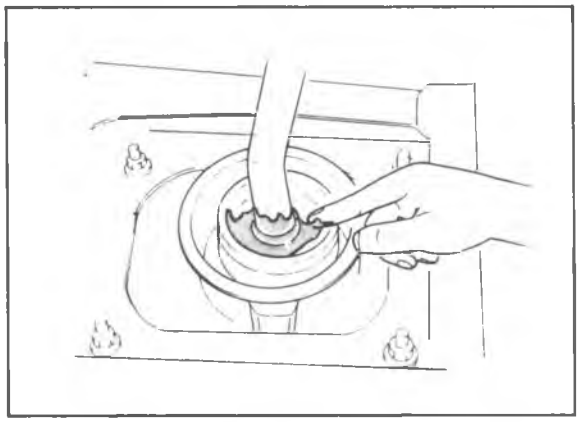

63U07A-157

Bracket Cavity
Put grease in the bracket cavity.

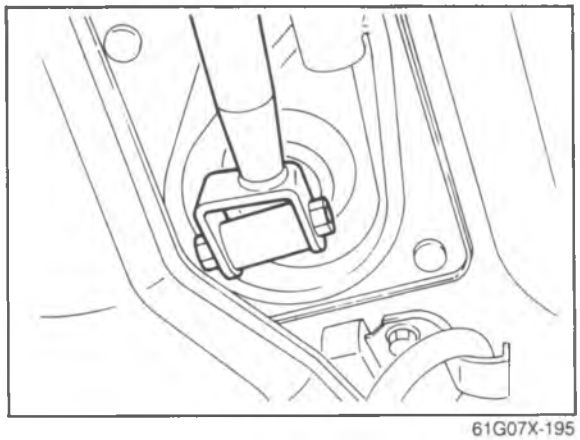

61G07X-195

Change Control Rod
Install the change control rod so that its relationship with the shift lever is as shown in the figure.

Tightening torque:
16—22 N·m (1.6—2.3 m-kg, 12—17 ft-lb)

AUTOMATIC TRANSAXLE (Electronically Controlled)

OUTLINE ..... 7B— 2
SPECIFICATIONS..... 7B— 2
COMPONENT LOCATION ..... 7B— 3
STRUCTURAL VIEW..... 7B— 4
OPERATION OF COMPONENTS . 7B— 5
FLUID PASSAGE LOCATION..... 7B— 6
TROUBLESHOOTING ..... 7B— 9
GENERAL NOTE ..... 7B— 9
STEP 1 (WARNING CODE RETRIEVAL)..... 7B— 12
STEP 2 (PRELIMINARY INSPECTION)..... 7B— 20
STEP 3 (SIGNAL INSPECTION)... 7B— 22
STEP 4 (STALL TEST)..... 7B— 25
STEP 5 (TIME LAG TEST)..... 7B— 28
STEP 6 (OIL PRESSURE TEST)... 7B— 29
STEP 7 (ROAD TEST) ..... 7B— 32
ELECTRICAL SYSTEM COMPONENTS ..... 7B— 41
MODE SWITCH ..... 7B— 41
HOLD SWITCH..... 7B— 41
INHIBITOR SWITCH ..... 7B— 42
WATER TEMPERATURE SWITCH 7B— 43
FLUID TEMPERATURE SWITCH.. 7B— 43
BRAKE LIGHT SWITCH ..... 7B— 44
PULSE GENERATOR..... 7B— 44
VEHICLE SPEED SENSOR ..... 7B— 44
CRUISE CONTROL SWITCH..... 7B— 45
IDLE SWITCH AND THROTTLE SENSOR..... 7B— 45
SOLENOID VALVES ..... 7B— 45
MODE, AND HOLD INDICATOR LIGHT..... 7B— 45
EC-AT CONTROL UNIT..... 7B— 46
ON-VEHICLE MAINTENANCE..... 7B— 48
AUTOMATIC TRANSAXLE FLUID (ATF) ..... 7B— 48
SELECTOR LEVER..... 7B— 49
THROTTLE CABLE ..... 7B— 50
CONTROL VALVE BODY ..... 7B— 53
OIL STRAINER ..... 7B— 55
ADJUSTMENT OF 2-4 BRAKE BAND ..... 7B— 56
REPLACEMENT OF DRIVESHAFT OIL SEAL ..... 7B— 56
OIL COOLER ..... 7B— 57
REMOVAL..... 7B— 58
DISASSEMBLY ..... 7B— 63
DISASSEMBLY-STEP 1 ..... 7B— 63
DISASSEMBLY-STEP 2 ..... 7B— 69
DISASSEMBLY-STEP 3 ..... 7B— 74
DISASSEMBLY-STEP 4 ..... 7B— 78
INSPECTION AND REPAIR ..... 7B— 81
PRECAUTION ..... 7B— 81
TORQUE CONVERTER ..... 7B— 81
OIL PUMP ..... 7B— 82
CLUTCH ASSEMBLY..... 7B— 87
SMALL SUN GEAR AND ONE-WAY CLUTCH..... 7B— 96
ONE-WAY CLUTCH AND CARRIER HUB ASSEMBLY..... 7B—100
3-4 CLUTCH ..... 7B—102
2-3 ACCUMULATOR ..... 7B—106
LOW AND REVERSE BRAKE..... 7B—107
2-4 BRAKE BAND..... 7B—108
BAND SERVO ..... 7B—108
OTHER INSPECTION..... 7B—108
CONTROL VALVE BODY ..... 7B—109
DIFFERENTIAL..... 7B—128
OUTPUT GEAR ..... 7B—131
IDLE GEAR..... 7B—132
BEARING COVER ASSEMBLY .... 7B—135
ASSEMBLY ..... 7B—137
ASSEMBLY-STEP 1 ..... 7B—137
ASSEMBLY-STEP 2 ..... 7B—145
ASSEMBLY-STEP 3 ..... 7B—150
ASSEMBLY-STEP 4 ..... 7B—156
INSTALLATION ..... 7B—163
TORQUE SPECIFICATIONS ..... 7B—163

86U07B-001

OUTLINE

SPECIFICATIONS

Model		EC-AT (G4A-EL)	
		Turbo	Non-Turbo
Torque converter stall torque ratio		1.600—1.800 : 1	1.700—1.900 : 1
Gear ratio	First	2.800	
	Second	1.540	
	Third	1.000	
	Fourth (OD)	0.700	
	Reverse	2.333	
Final gear ratio		3.700	
Number of drive plates/ driven plates	Forward clutch	4/4	3/3
	Coasting clutch	2/2	
	3-4 clutch	5/5	
	Reverse clutch	2/2	
	Low and reverse brake	5/5	4/4
Servo diameter (Piston outer dia./retainer inner dia.) mm (in)		78/36 (3.07/1.42)	78/40 (3.07/1.57)
Speedometer gear ratio (Driven/Drive gear)	P185/70 R14	20 : 25	
	P195/60 HR15 P195/60 R15 87H	21 : 25	
Automatic transmission fluid	Type	Dexron II or MIII	
	Capacity liters (US qt, Imp qt)	6.8 (7.2, 6.0)	

86U07B-002

COMPONENT LOCATION

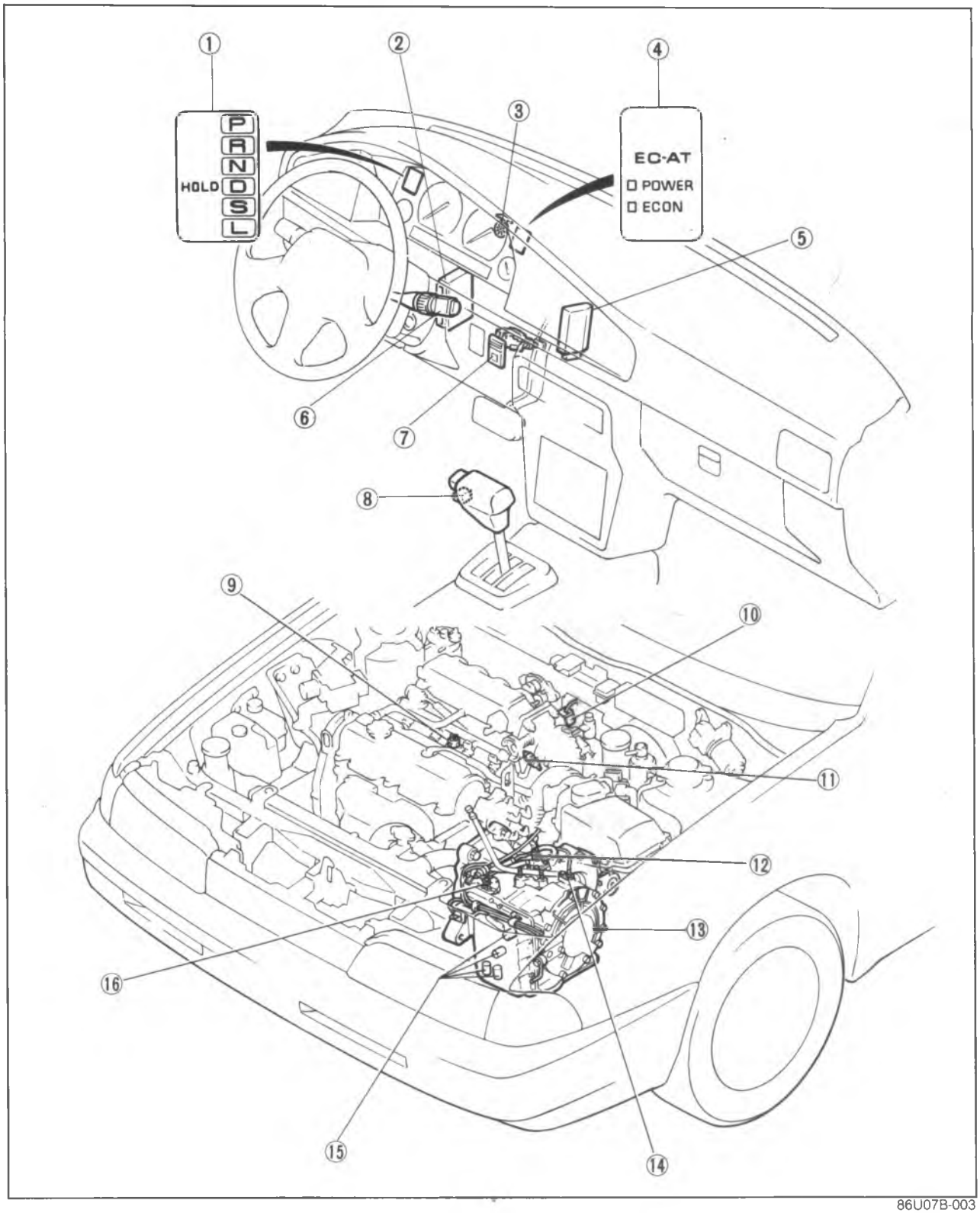

86U07B-003

1. Hold indicator light
2. EC-AT control unit
3. Vehicle speed sensor
4. Mode indicator light
5. Cruise control unit
6. Cruise control switch
7. Mode switch
8. Hold switch
9. Water temperature switch
10. Throttle sensor
11. Idle switch
12. Fluid temperature switch
13. EC-AT
14. Pulse genelator
15. Solenoid valves
16. Inhibitor switch

STRUCTUAL VIEW

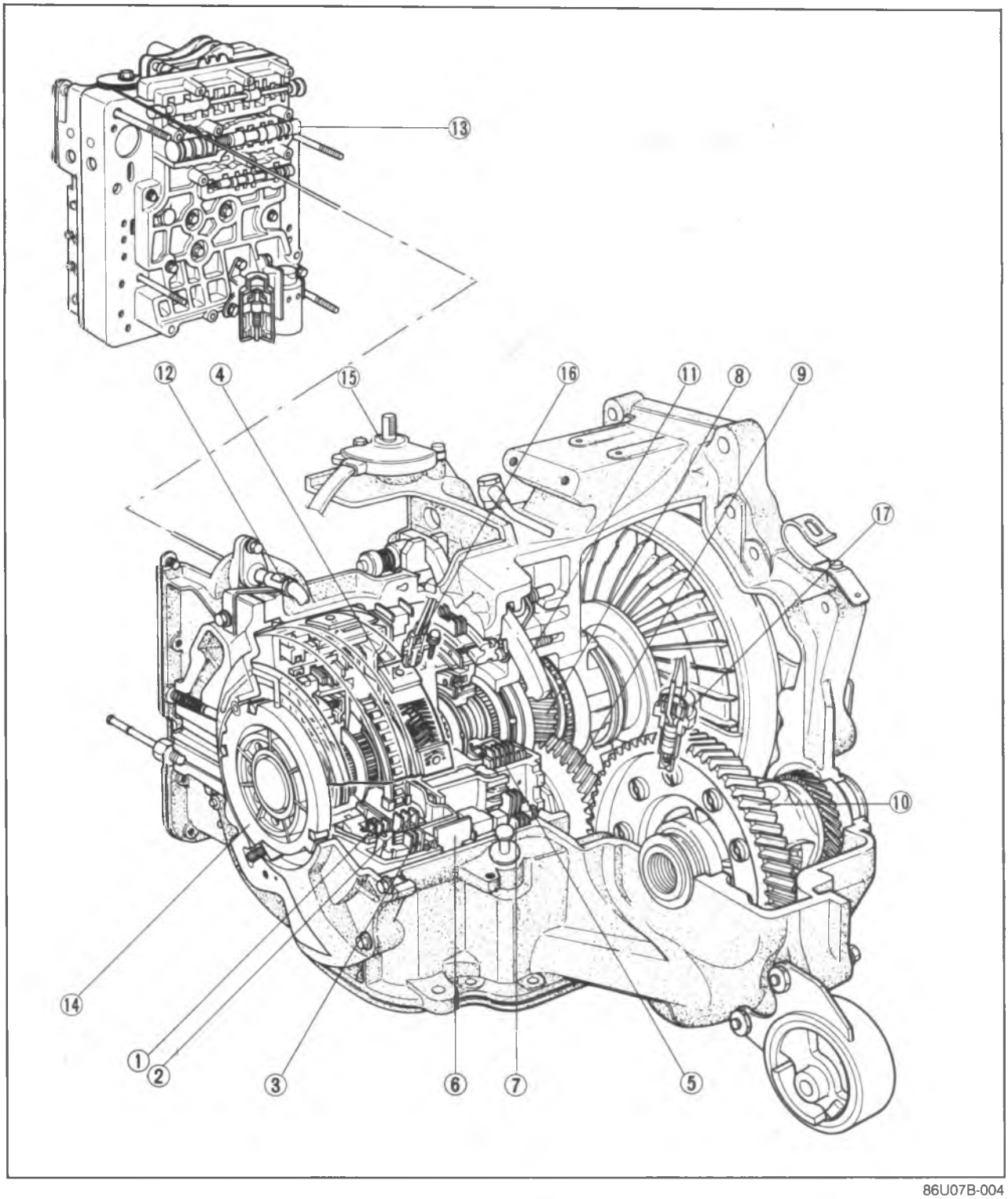

86U07B-004

1. Coasting clutch
2. Forward clutch
3. Reverse clutch
4. Reverse and forward drum
5. 3-4 clutch
6. 2-4 brake band
7. Low and reverse brake
8. Output gear
9. Idle gear
10. Differential
11. Parking pawl
12. Throttle cable
13. Control body
14. Oil pump
15. Inhibitor switch
16. Pulse generator
17. Fluid temperature switch

OPERATION OF COMPONENTS

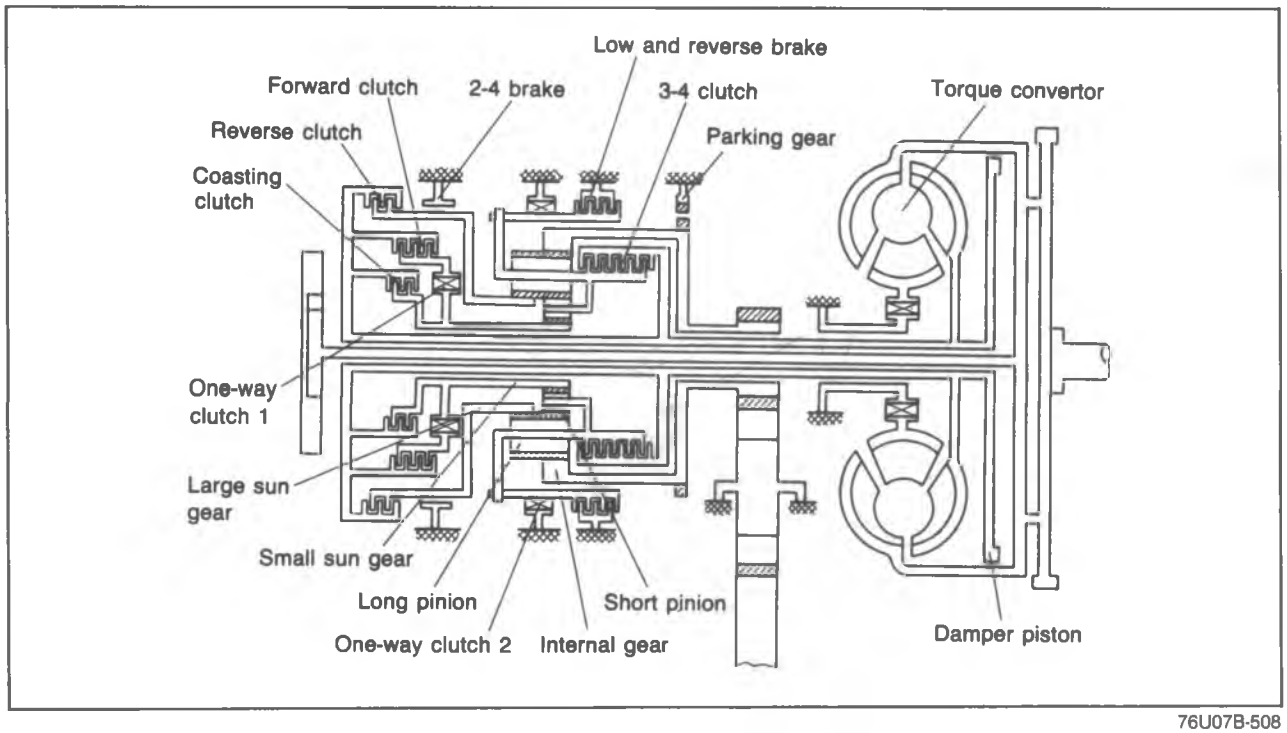

76U07B-508

Range	Gear		Engine braking effect	Operation elements								
				Forward clutch	Coasting clutch	3-4 clutch	Reverse clutch	2-4 brake Applied	2-4 brake Released	Low & reverse brake	One-way clutch 1	One-way clutch 2
P	Non		—									
R	Reverse		Yes				○			○		
N	Non		—									
D	1st		No	○							○	○
	2nd		No	○				○			○	
	3rd	Below approx. 40 km/h (25 mph)	Yes	○	○	○			○		○	
		Above approx. 40 km/h (25 mph)	Yes	○	○	○		⊗	○		○	
	OD		Yes	◎		○		○				
S	1st		No	○							○	○
	2nd		No	○				○			○	
	3rd	Below approx. 40 km/h (25 mph)	Yes	○	○	○			○		○	
		Above approx. 40 km/h (25 mph)	Yes	○	○	○		⊗	○		○	
L	1st		No	○						○	○	○
	2nd		Yes	○	○			○			○	
HOLD D	2nd		No	○				○			○	
	3rd	Below approx. 40 km/h (25 mph)	Yes	○	○	○			○		○	
		Above approx. 40 km/h (25 mph)	Yes	○	○	○		⊗	○		○	
HOLD S	2nd		Yes	○	○			○			○	
	3rd	Below approx. 40 km/h (25 mph)	Yes	○	○	○			○		○	
		Above approx. 40 km/h (25 mph)	Yes	○	○	○		⊗	○		○	
HOLD L	1st		Yes	○	○					○	○	○
	2nd		Yes	○	○			○			○	

⊗: Indicates fluid pressure to servo but band not applied due to pressure difference in servo.
◎: Indicates that it does not function to transmit power.

86U07B-005

FLUID PASSAGE LOCATION

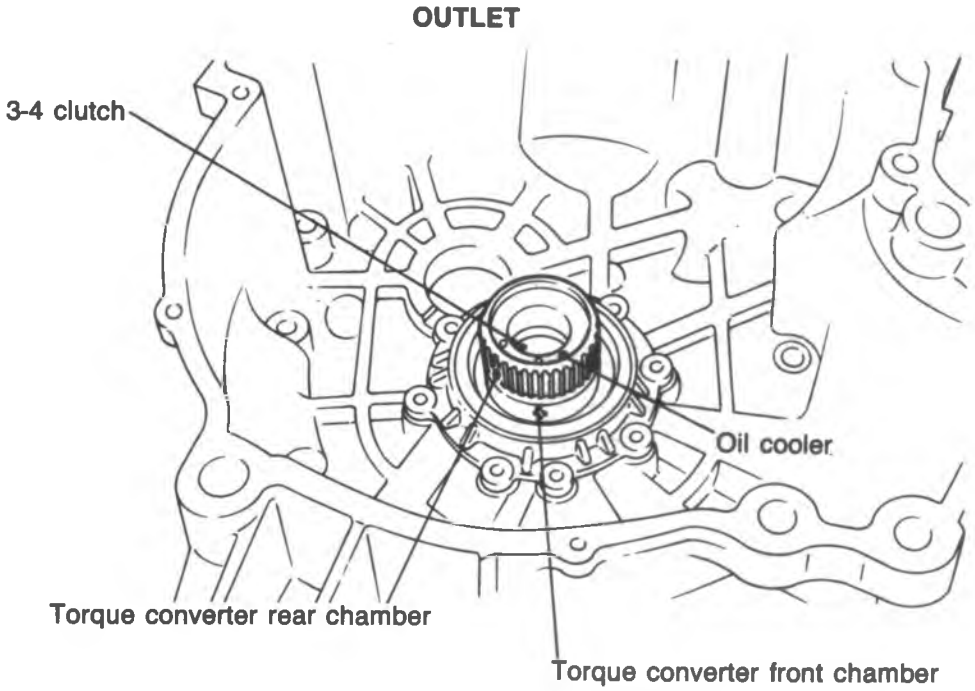

Converter housing

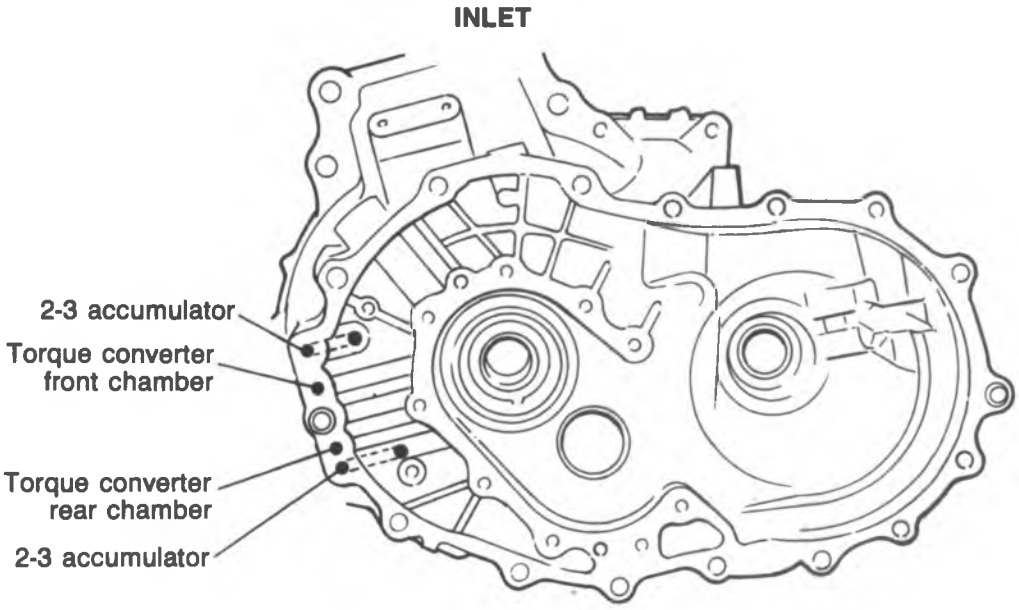

Converter housing

86U07B-006

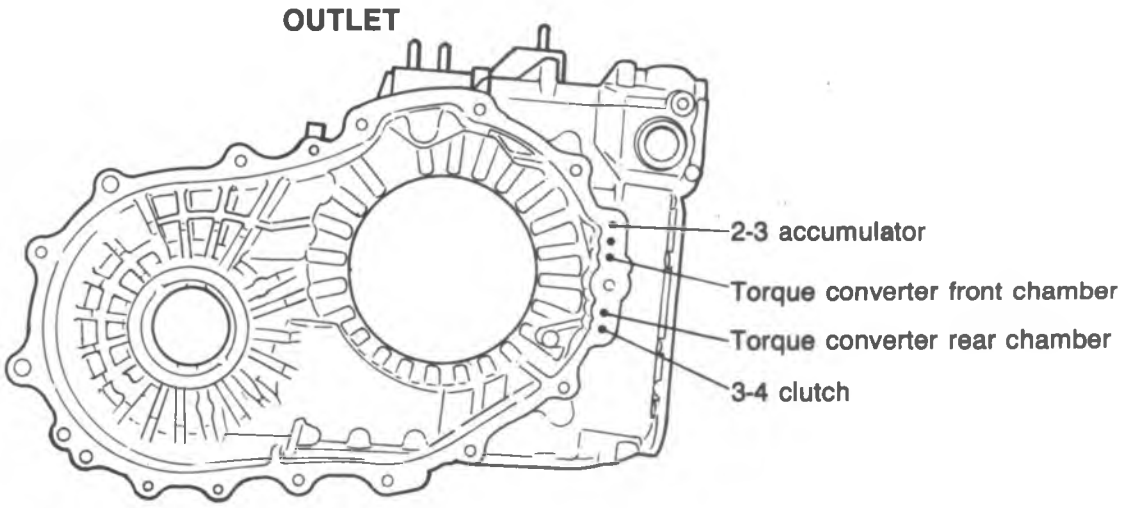

Transaxle case

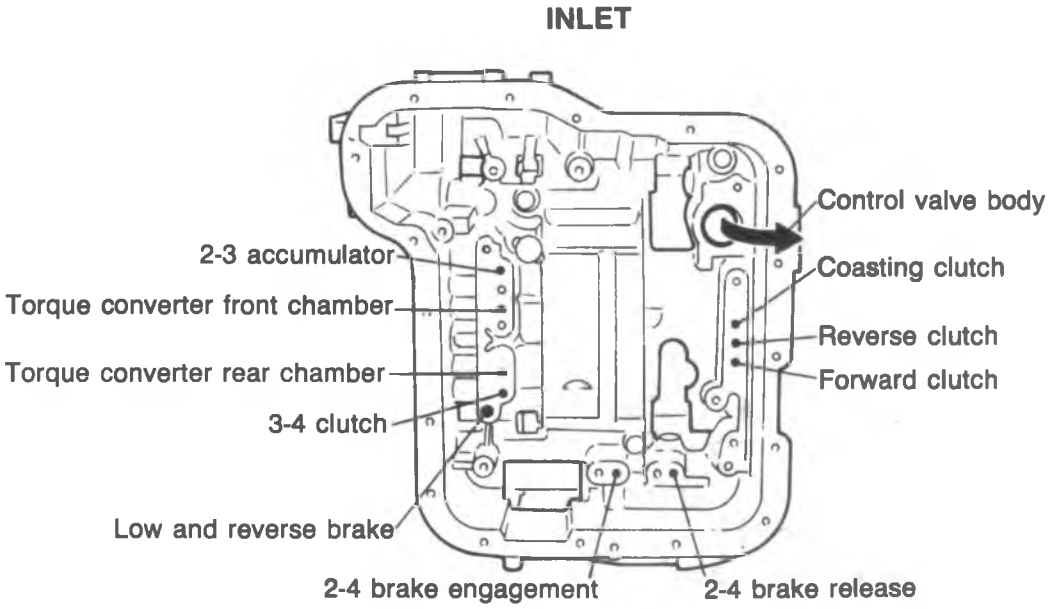

Transaxle case

INLET AND OUTLET

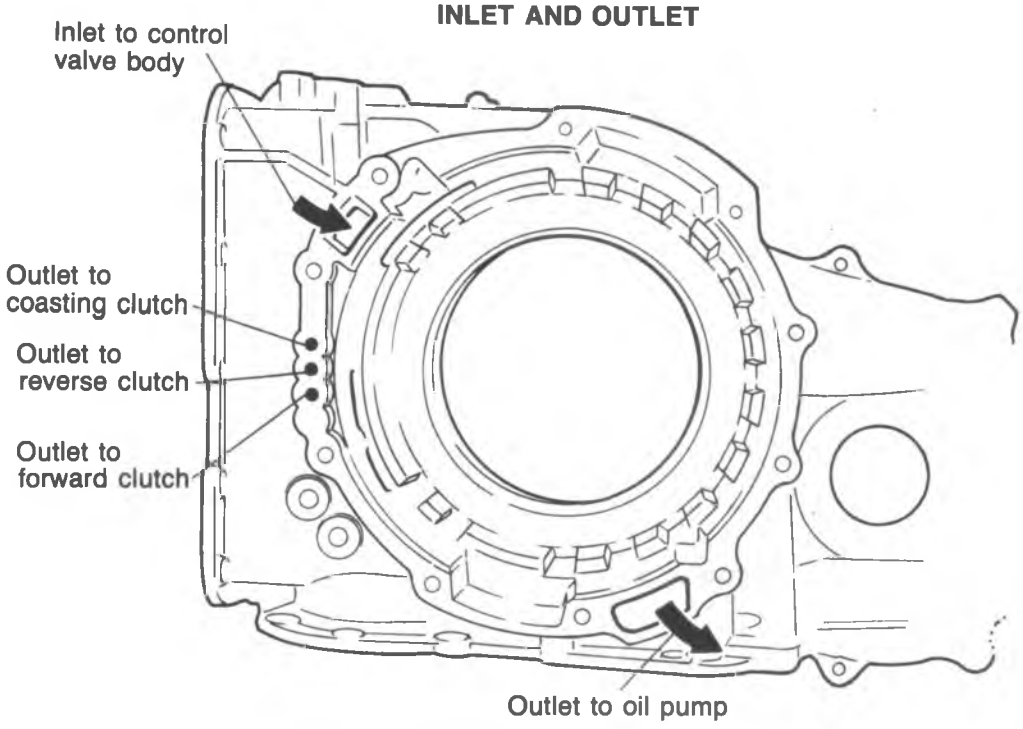

Transaxle case

INLET AND OUTLET

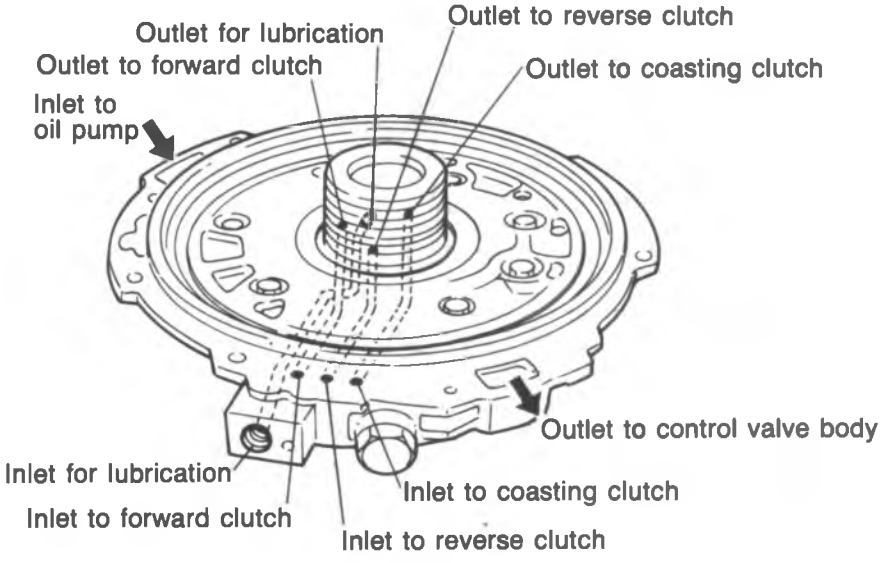

Oil pump

TROUBLESHOOTING

GENERAL NOTE

In the event of a problem with the EC-AT, the cause may be in the engine, EC-AT power train, hydraulic control system, or electronic control system.
When troubleshooting, therefore, it is recommended to begin from those points that can be judged quickly and easily. The recommended troubleshooting sequence is described below.

STEP 1: WARNING CODE RETRIEVAL
Check self-diagnosed warning code memorized in the EC-AT control unit with the **EC-AT TESTER**

..... This step checks the major electronic components.
- Throttle sensor and circuit
- Pulse genelator and circuit
- Speed sensor and circuit
- All solenoid valves and circuits
- EC-AT control unit

STEP 2: PRELIMINARY INSPECTION
Check preliminary check items
- ATF level and condition
- Oil leakage
- Selector lever position
- Idle speed
- Tire inflation pressure
- Inhibitor switch
- Throttle cable

..... This step checks conditions surrounding the automatic transmission.

STEP 3: SIGNAL INSPECTION
Check signals to the EC-AT control unit with the **EC-AT TESTER**

..... This step checks the electronic control system.
- All input signals to EC-AT control unit
- All output signals

STEP 4: STALL TEST
Check engine stall speed

..... This step checks the power train.
- Friction element slipping
- Torque converter capacity

STEP 5: TIME LAG TEST
Check time lag of oil pressure supply

..... This step checks operation of the hydraulic control system.
- Accumulators
- Friction elements slipping
- Regulating valves

STEP 6: OIL PRESSURE TEST
Check line pressures

..... This step checks major points of the hydraulic control system.
- Oil pump
- Line pressure control
- Throttle pressure control

STEP 7: ROAD TEST
Check items on road test
- Shift point
- Shift schedule
- Kick-down
- Shift shock
- Lock-up and overdrive inhibition

..... This step checks functions of the EC-AT control unit and hydraulic control system.

86U07B-007

By following the above seven steps, the cause of the problem should be located.
As another guide to faster location of the causes of problems, the Quick Diagnosis Chart is included at pages 7B—10,11.
In this chart, a circle is used to indicate the components that might be the cause of trouble for 23 types of problems. It is only necessary to check those components indicated by circles, at each step of the troubleshooting process, in order to quickly locate the cause of the problem.

Quick Diagnosis Chart
The Quick Diagnosis Chart shows various problems and the relationship of various components that might be the cause of the problem.

1. Components indicated in the "Self-Diag." column are diagnosed by the EC-AT control unit self-diagnosis function.
   The **EC-AT Tester** can be used for easy retrieval of these signals.
2. Components indicated in the "Adjustment" column indicate that there is a possibility that the problem may be the result of an incorrect adjustment.
   Check the adjustment of each component, and readjust if necessary.
3. Input and outout signals of the EC-AT control unit for the components indicated in the "EC-AT TESTER" column can be easily checked by using of the **EC-AT Tester**.
4. Components indicated in the "Stall Test" column can be checked for malfunction by the results of the stall test.
5. Components indicated in the "Time Lag Test" column can be checked for malfunction by the results of the time lag test.
6. Components indicated in the "Oil Pressure Test" column can be checked for malfunction by the results of the oil pressure test.
7. Components indicated in the "Road Test" column can be checked for malfunction by the results of the road test.
8. The checking, adjusting, repair or replacement procedures for each component is described in the page(s) noted in the "Reference Page" column.

86U07B-008

Inspection point / Item	Electronic control system														Preliminary			Hydraulic control system					Powertrain										
	Brake light switch	Inhibitor switch	Mode switch	Hold switch	Idle switch	Throttle sensor	Cruise control switch	Water temp. switch	Vehicle speed sensor	Pulse generator	1-2 solenoid	2-3 solenoid	3-4 solenoid	Lock-up solenoid	ATF level and condition	Selector lever	Throttle cable	Idle speed and Ignition timing	Control valves	Accumulators	Oil pump	Hydraulic circuit	Torque converter	Forward clutch	Coasting clutch	Reverse clutch	3-4 clutch	2-4 brake band and servo	Low and reverse brake	One-way clutch 1	One-way clutch 2	Parking gear	Planetary gear	Differential assembly
Self-diag.						○			○	○	○	○	○	○																				
Adjustment		○			○	○									○	○	○	○										○						
EC-AT TESTER	○	○	○	○	○	○	○	○	○	○	○	○	○	○																				
Stall Test																			○		○		○	○		○		○		○	○			
Time Lag Test																				○				○					○					
Oil Pressure Test																	○		○		○	○												
Road Test																								○	○		○	○	○	○				

86U07B-009

Condition	Inspection point and reference page	ON VEHICLE																																		OFF VEHICLE
		Electronic control system													Prelim-inary			Hydraulic control system					Powertrain												
		7B—44	7B—42	7B—41	7B—41	Section 4A	Section 4A	Section 15	7B—43	7B—44	7B—44	7B—45	7B—45	7B—45	7B—45	7B—48	7B—50	7B—49, 51	Section 4A	7B—53, 109	7B—106, 114	7B—82	7B—169	7B—81	7B—87	7B—87	7B—87	7B—102	7B—108	7B—107	7B—96	7B—100	7B—108	7B—100	7B—128
		Brake light switch	Inhibitor switch	Mode switch	Hold switch	Idle switch	Throttle sensor	Cruise control switch	Water temp. switch	Vehicle speed sensor	Pulse generator	1-2 solenoid	2-3 solenoid	3-4 solenoid	Lock-up solenoid	ATF level and condition	Selector lever	Throttle cable	Idle speed and Ignition timing	Control valves	Accumulators	Oil pump	Hydraulic circuit	Torque converter	Forward clutch	Coasting clutch	Reverse clutch	3-4 clutch	2-4 brake band and servo	Low and reverse brake	One-way clutch 1	One-way clutch 2	Parking gear	Planetary gear	Differential assembly
Accelerating	Vehicle does not move in D, S, L, or R range															○	○			○		○	○	○	○		○				○	○	○		
	Vehicle moves in N range																○			○															
	Excessive creep																	○	○					○											
	No creep at all															○	○	○		○		○	○		○		○								
Shifting	No shift		○		○							○	○	○		○	○			○		○													
	Abnormal shift sequence		○		○		○	○	○		○	○	○	○		○	○			○									○						
	Frequent shifting		○	○			○	○			○	○	○	○	○					○															
	Excessively high or low shift point		○	○	○	○	○				○	○	○	○			○			○															
	No lock-up	○					○	○	○		○	○	○	○	○		○							○											
	No kick-down		○		○		○										○																		
Slipping	Engine run away or slip when starting vehicle		○													○				○		○			○						○				
	Engine run away or slip when up- or down-shifting		○													○				○		○			○		○	○	○		○				
Shift shock	Excessive N to D or N to R shift shock															○			○	○	○				○		○								
	Excessive shift shock when upshifting or downshifting															○		○		○	○					○		○	○						
	Excessive shift shock when changing range		○														○			○						○				○					
Noise	Transmission noisy in N or P range															○						○		○											○
	Transmission noisy in D, S, L, or R range															○									○						○			○	
Others	No engine braking												○	○						○			○			○				○					
	No mode change		○	○	○		○		○	○	○	○	○	○	○																				
	Transmission overheats														○	○				○		○		○											
	Vehicle moves in "P", or parking gear not disengaged when "P" is disengaged																○																○		
	Hold indicator flashes						○			○	○	○	○	○	○																				
	Engine will not start		○														○																		

86U07B-010

STEP 1 (WARNING CODE RETRIEVAL)

Self-diagnosis Function

The self-diagnosis system, which is integrated in the EC-AT control unit, diagnoses malfunction of the main sensors (input) and solenoid valves (output), and the EC-AT control unit.
Malfunctions which have happened or are continuing are memorized in the EC-AT control unit as specific codes.
The **EC-AT Tester** is used to retrieve these warning codes. Each malfunction is indicated by a code number and buzzer as shown the table below.

Code Number

Code number	Location of malfunction	Buzzer	
		'87 EC-AT Tester **49 G019 901**	'88 EC-AT Tester **49 G019 901A**
06	Speed sensor	ON / OFF	ON / OFF
12	Throttle sensor		
55	Pulse generator	2.0 sec / 2.0 sec	
60	1-2 shift solenoid valve		
61	2-3 shift solenoid valve		
62	3-4 shift solenoid valve		
63	Lock-up solenoid valve	0.4 sec / 2.0 sec	0.4 sec / 4 sec / 1.2 sec / 1.6 sec

86U07B-011

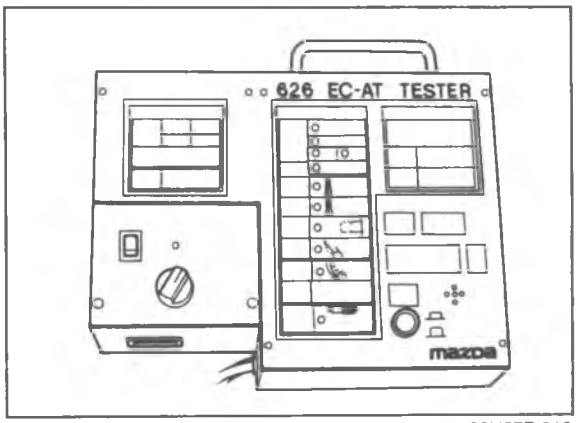

86U07B-012

EC-AT Tester

The previous **EC-AT Tester Body** (49 G019 901) can be used along with the **EC-AT Adapter Set** (49 G019 9A1). Also the new **EC-AT Tester** (49 G019 9A2) can be used '87 and '86 626.

Components

EC-AT Tester Body (49 G019 901) + EC-AT Adapter Set (49 G019 9A1)

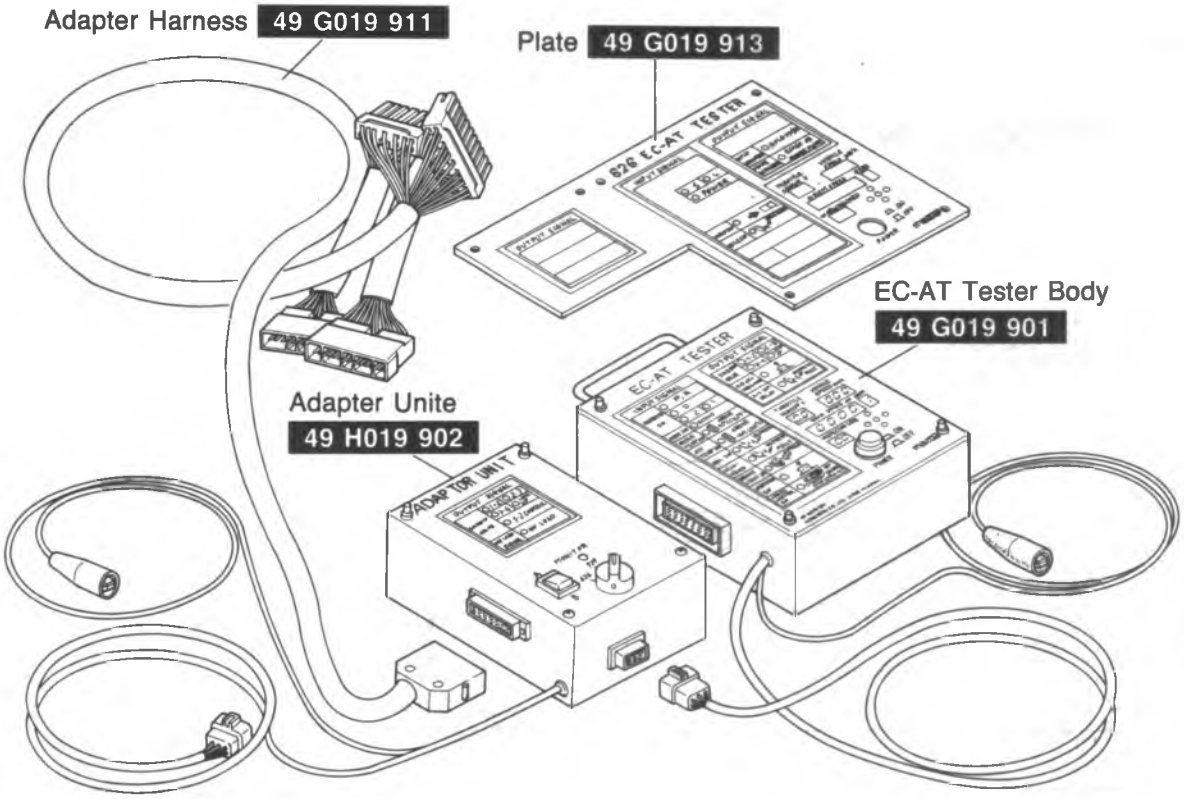

EC-AT Tester (49 G019 9A2)

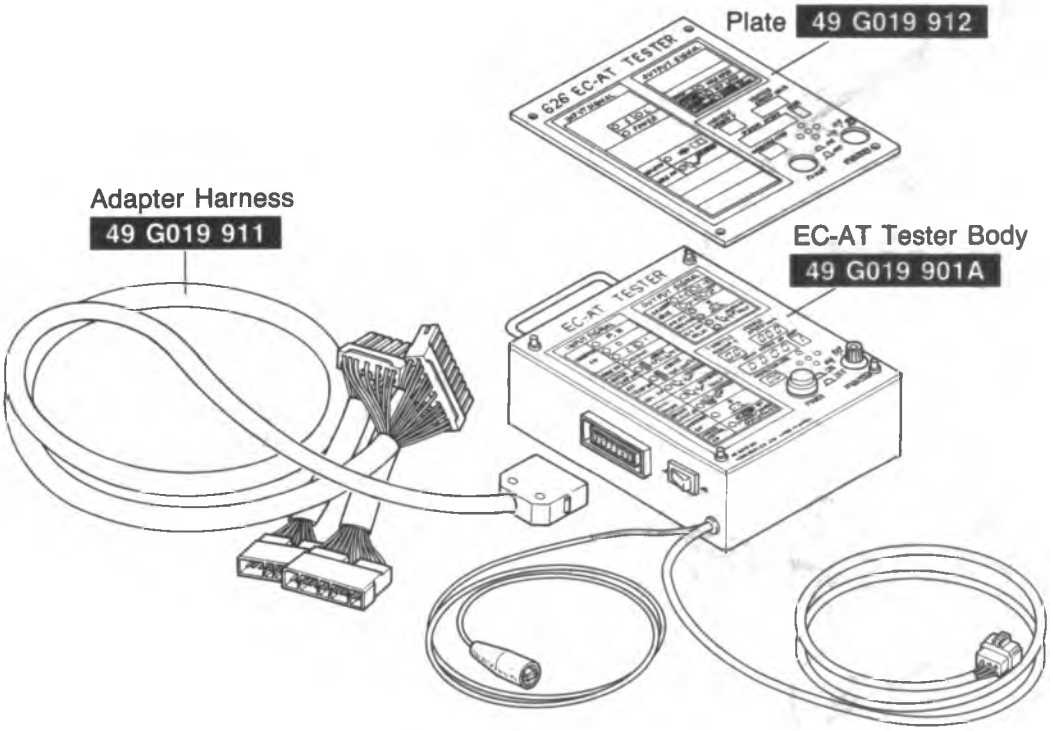

86U07B-013

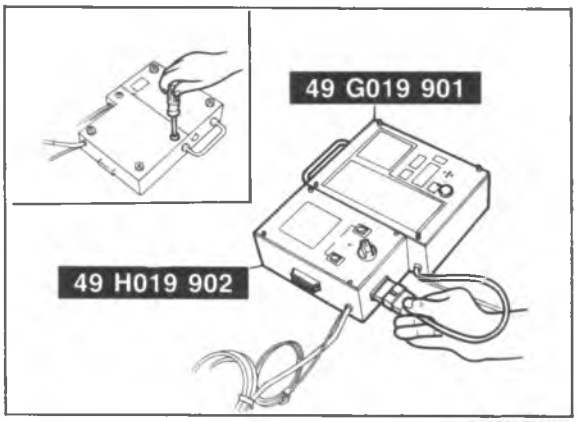

86U07B-014

Assembly of EC-AT Tester
For 1987 626 EC-AT tester

1. Install the **adapter unit** (49 H019 902) to the **EC-AT tester body** (49 G019 901).
2. Connect the 6 pin connector to the adapter unit.

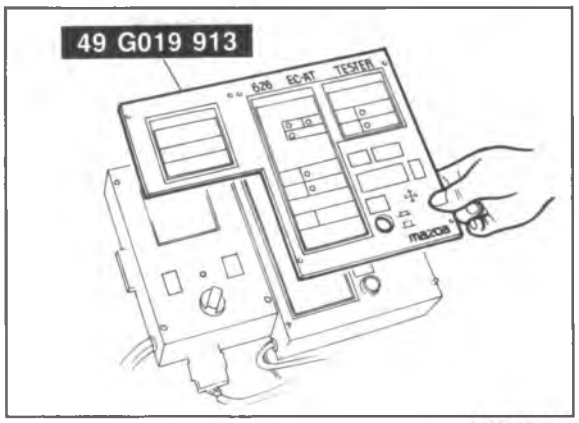

86U07B-015

3. Set the **plate** (49 G019 913) on to the EC-AT Tester.

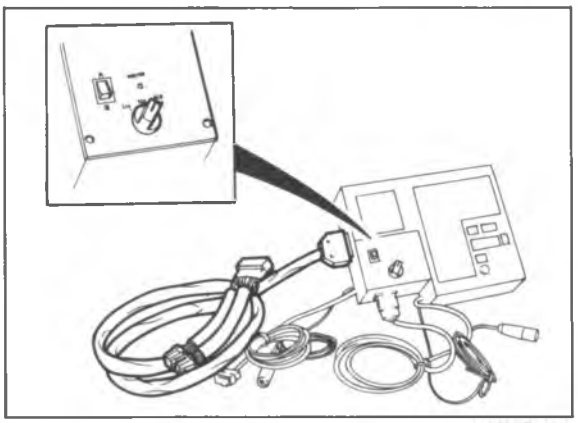
86U07B-016

4. Connect the **adapter harness** (49 G019 911) to the **adapter unit**.
5. Select the code select switch to A position.

Note
B position of code selector switch is used for '87 626.

6. Select the select switch to NEW 626 position.

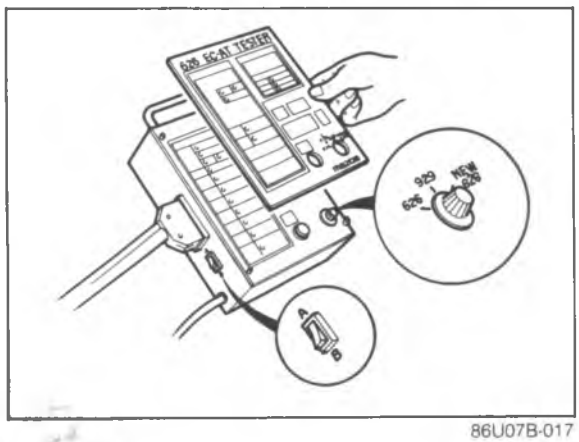

86U07B-017

For 1988 626 EC-AT tester

1. Set the **plate** (49 G019 912) onto the **EC-AT tester body** (49 G019 901A).
2. Connect the **adapter harness** (49 G019 911) to the **EC-AT tester body**.
3. Perform the steps 5 and 6 mentioned above.

06 → 4 second period →
55 → 4 second period →
63 → 4 second period →
Repeats above

86U07B-018

General Note

1. If there is more than one malfunction, the code numbers will be displayed on the tester one by one in a numerical order. In the case of malfunctions, 55, 06, and 63, the code numbers are displayed in an order of 06, 55, then 63. The display is as shown.

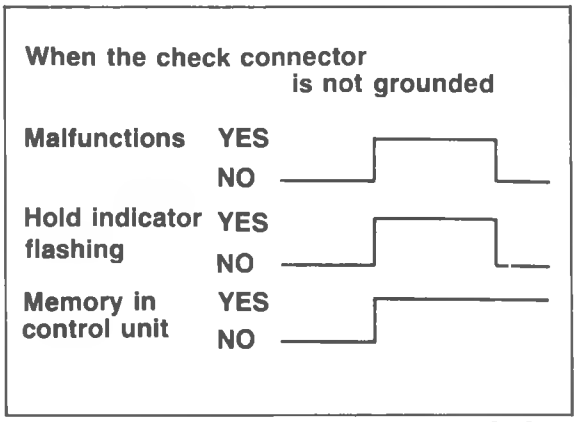

79G07C-061

2. The hold indicator flashes to indicate the same pattern as the buzzer of the new EC-AT Tester when the EC-AT service connector is grounded.
   When the EC-AT service connector is not grounded, the indicator flashes in a constant frequency while a malfunction is occurring and goes out if the malfunction recovers. However, the warning code is memorized in the EC-AT control unit.

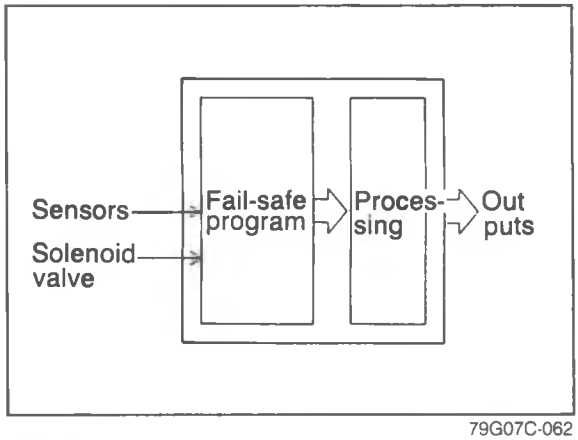

79G07C-062

3. The EC-AT control unit has a built-in fail-safe function for the throttle sensor, the pulse generator, and the 1-2, 2-3, and 3-4 shift solenoid valves.
   If a malfunction occurs, the EC-AT control unit will control operation of the remaining components according to a preset fail-safe program.
   The vehicle may still be driven, although the driving performance will be slightly affected.

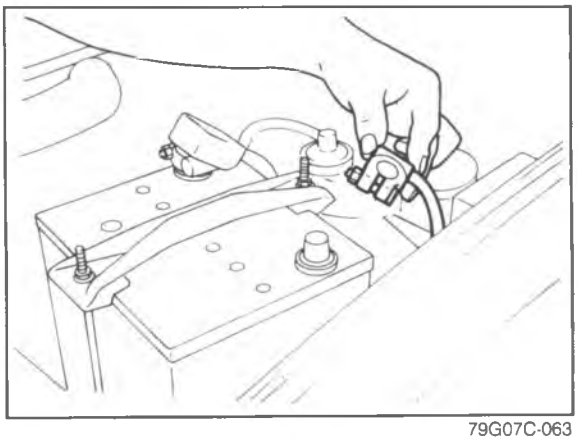

79G07C-063

4. The memory of warning codes is canceled by disconnecting the negative battery terminal for approx. five seconds.

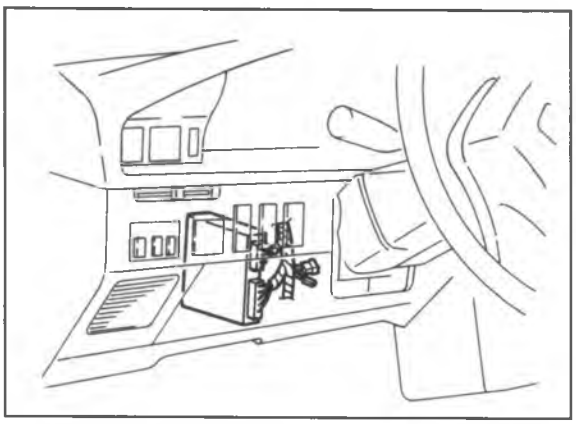

86U07B-019

Retrieval Procedure

1. Locate the service connector.

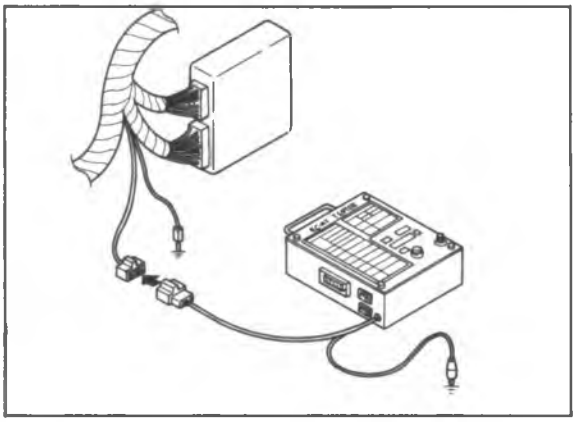

86U07B-020

2. Ground the ground connector of the **EC-AT Tester**.
3. Connect the 6 pin connector of the **EC-AT Tester** to the service connector.

   Note
   The service connector is blue-colored connector.

4. Ground the 1 pin service connector.

   Note
   The service connector is blue-colored connector.

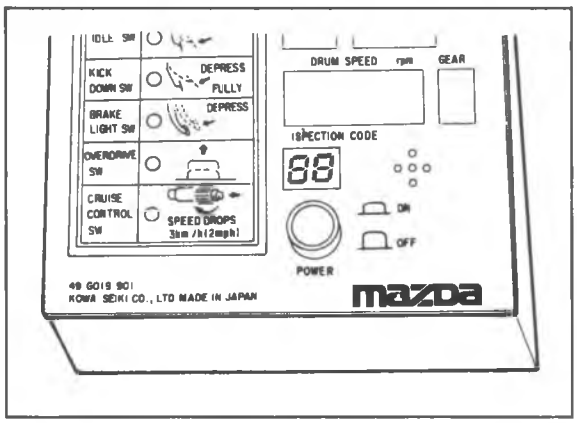

86U07B-021

5. Turn the ignition switch ON.
6. Check that "**88**" flashes on the digital display and the buzzer sounds for three seconds after turning the ignition switch ON.
7. If "**88**" does not flash, check the service connector wiring.
8. If "**88**" flashes and the buzzer sounds continuously for more than **20 seconds,** check wiring to 2M terminal of the EC-AT control unit for short-circuit then replace the EC-AT control unit and repeat steps 3 and 4.
9. Note the code numbers and check for the causes by referring to the Inspection Procedure shown on pages 7B—17 to 7B—19, repair as necessary.

   Note
   After repairs are made, recheck for code numbers by performing the "After-repair procedure."

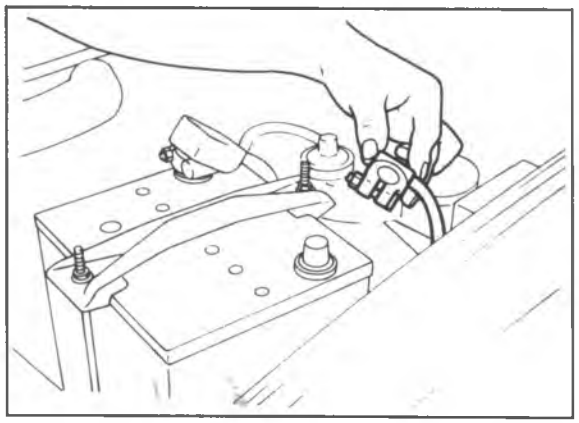

79G07C-068

After-repair Procedure

1. Cancel the memory of malfunctions by disconnecting the negative battery terminal for at least five seconds, then reconnect it.
2. Remove the EC-AT tester if it is connected.

Drive at 50 km/h (31 mph)

|

Kick-down

|

Stop the vehicle

79G07C-069

3. Drive the vehicle at 50 km/h (31 mph), then depress the accelerator pedal fully to activate kick-down. Stop the vehicle gradually.

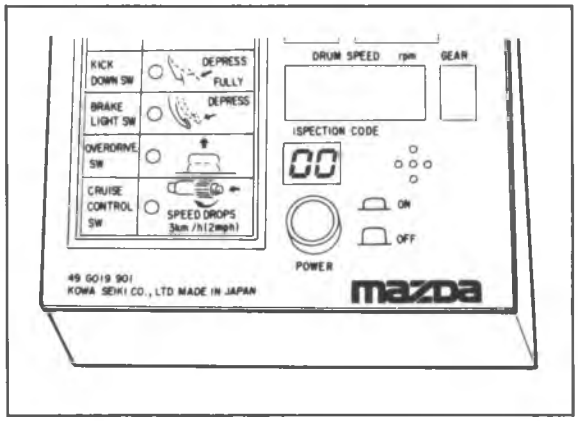

79G07C-070

4. Reconnect the **EC-AT tester** to the service connector.
5. Ground the EC-AT service connector with a jumper wire.
6. Turn the ignition switch ON.
7. Check that no code numbers are displayed.

Inspection Procedure
No. 06 code display (Vehicle speed sensor)

Is there poor connection at connector?	YES →	Repair or replace.
↓ NO		
Does **EC-AT Tester** display vehicle speed? (Refer to STEP 3-Signal Inspection)	YES →	Vehicle speed sensor OK. Cancel memory of code number.
↓ NO		
Does speed sensor operate correctly? (Refer to page 7B—44)	NO →	Check speedometer.
YES →		Check for open or short-circuit in wiring.

86U07B-023

No. 12 code display (Throttle sensor)

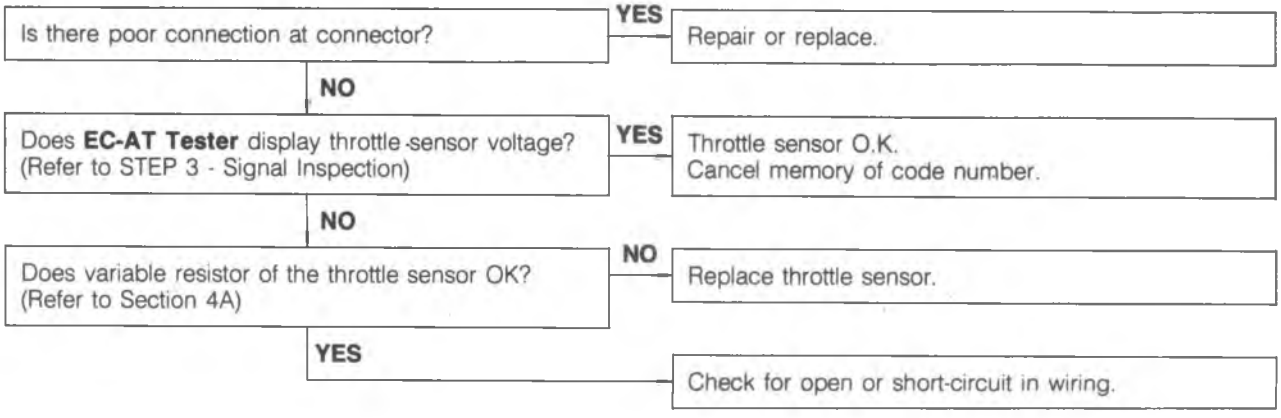

79G07C-072

No. 55 code display (Pulse generator)

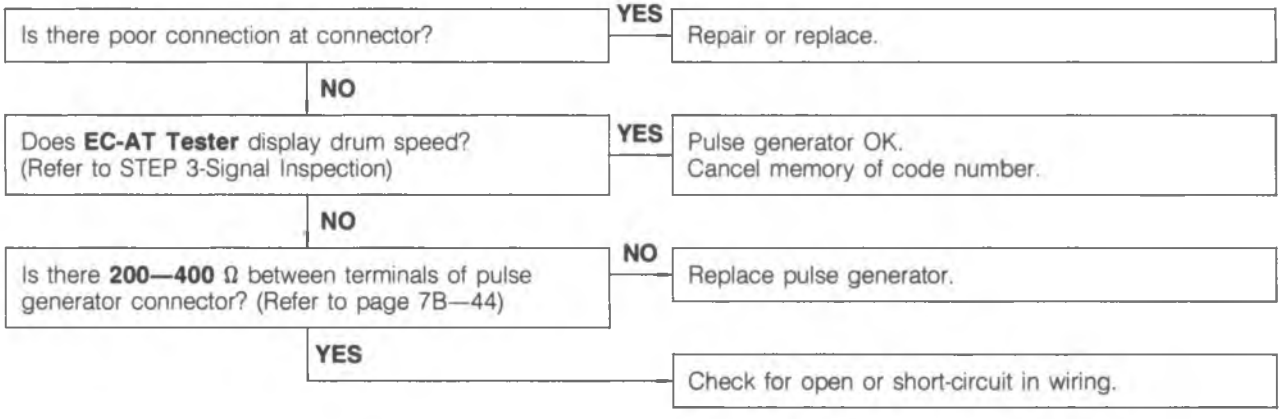

86U07B-024

No. 60, 61, 62, or 64 code display (1-2 shift, 2-3 shift, or 3-4 shift solenoid valve)

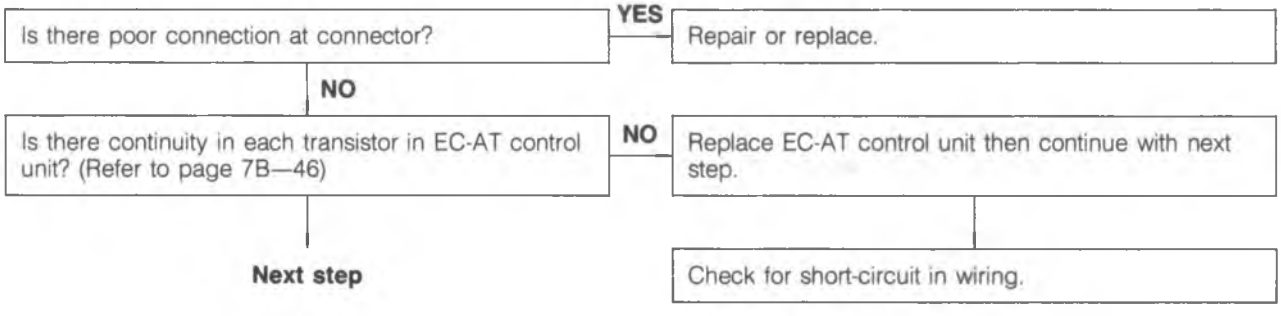

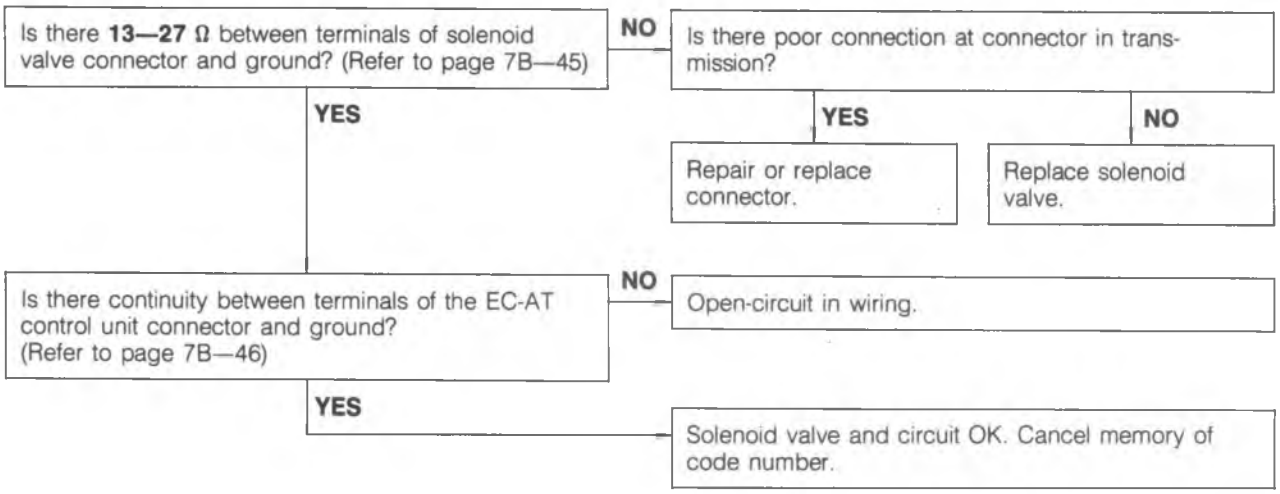

86U07B-025

No. 63 code display (Lock-up solenoid valve)

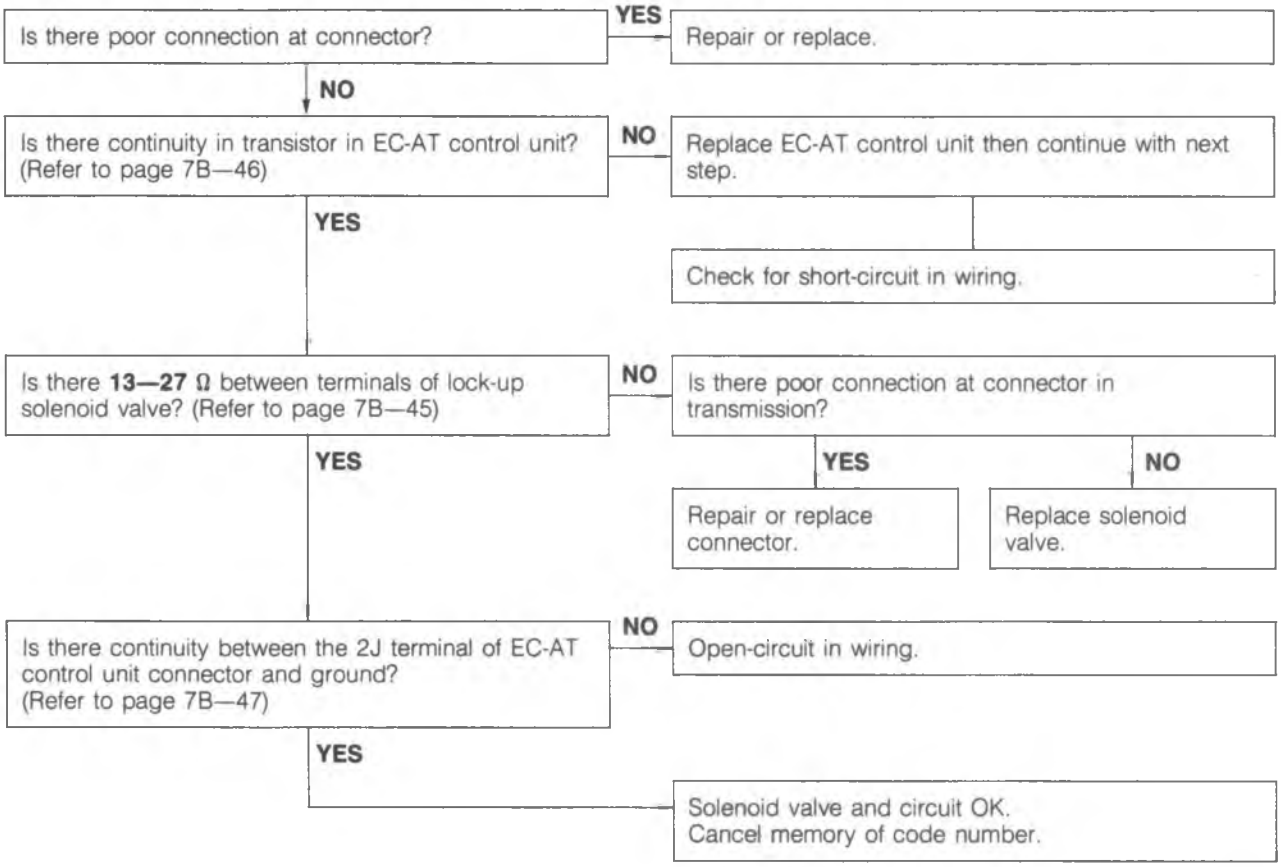

86U07B-026

STEP 2 (PRELIMINARY INSPECTION)
In this step, the fundamental points related to the automatic transaxle are checked. These points must be kept in the correct condition at all times in order to assure proper operation of the automatic transaxle.

1. Automatic Transmission Fluid (ATF)
Check ATF level and condition. (Refer to page 7B—48)

2. Selector Lever
Check selector lever position and adjust if necessary. (Refer to page 7B—49)

86U07B-027

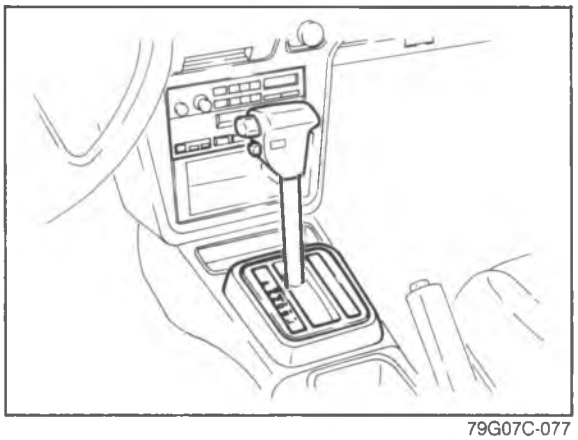

79G07C-077

3. Oil Leakage
Check for oil leakage.
(1) Warm up the ATF.
(2) Apply the parking brake and position wheel chocks securely to prevent the vehicle from rolling forward.
(3) Shift the selector lever to R range.
(4) Check if oil leaks from the following oil seals or gaskets.
(5) If oil leaks, replace the oil seal or gasket.

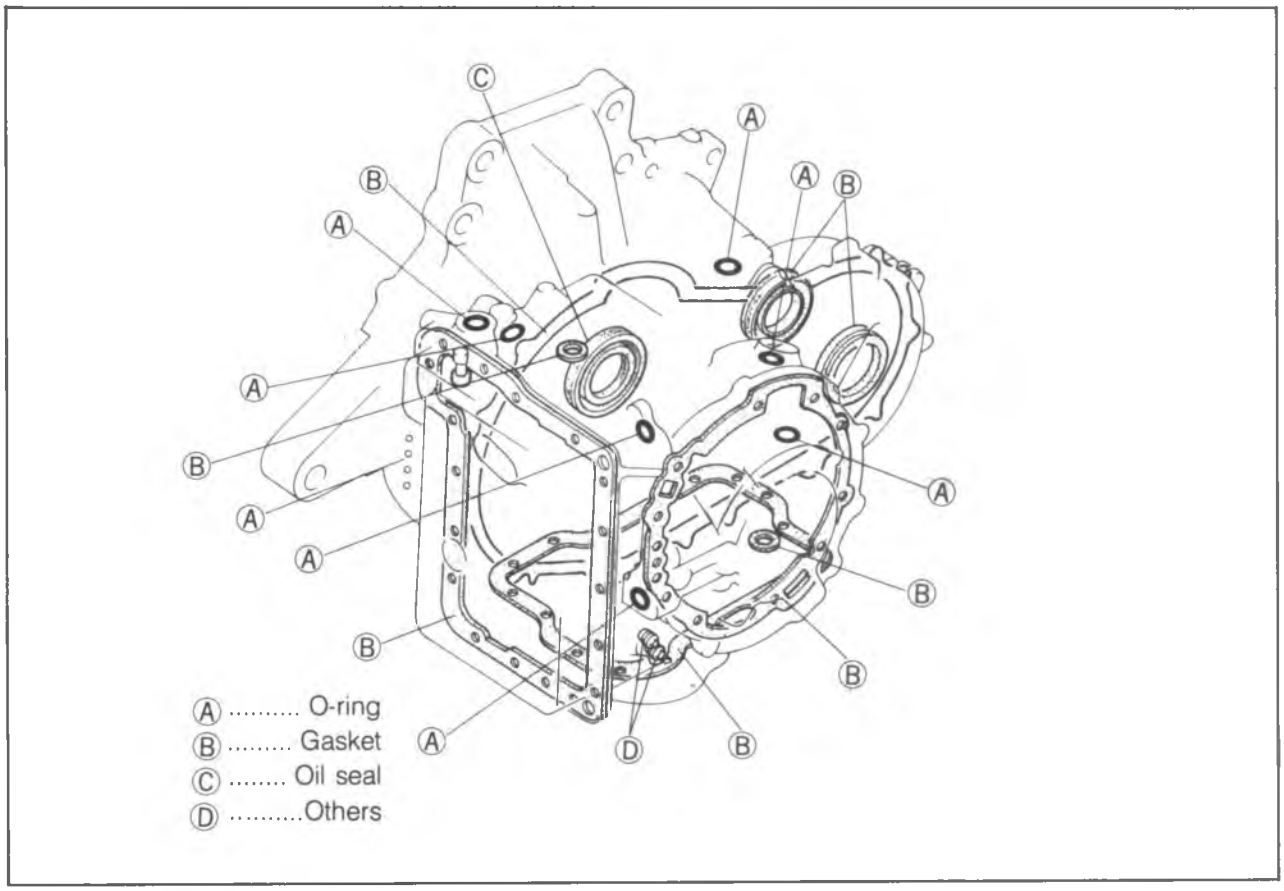

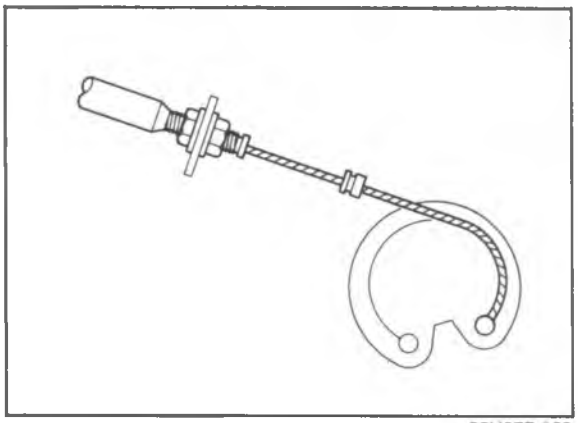

86U07B-028

4. Throttle cable

(1) Check the inner and outer cable for damage.
(2) Make sure that the accelerator operates smoothly.

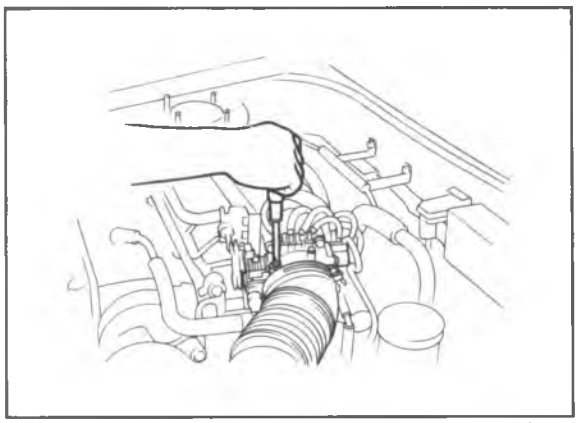

79G07C-079

5. Idle Speed

Check idle speed. (Refer to Section 4A)

6. Tire Inflation Pressure

Check tire inflation pressure. (Refer to Section 12)

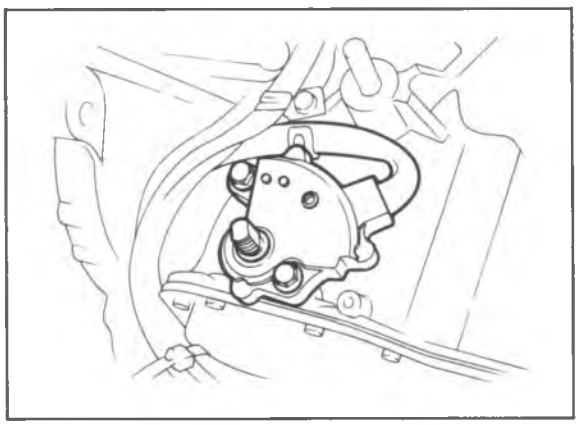

86U07B-029

7. Inhibitor Switch

Check the inhibitor switch for operation. (Refer to page 7B—42)

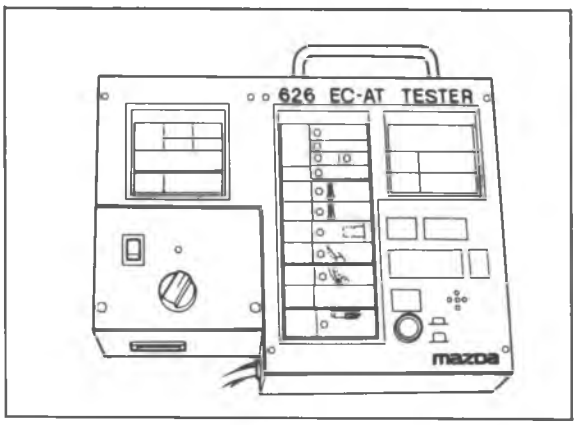

86U07B-030

STEP 3 (SIGNAL INSPECTION)
In this step, the input and output signals are checked with the **EC-AT Tester**.
The Tester checks for proper operation of the various switches and sensors in the EC-AT system. It also checks the control unit for output of the various control signals. Powertrain slippage is also checked.

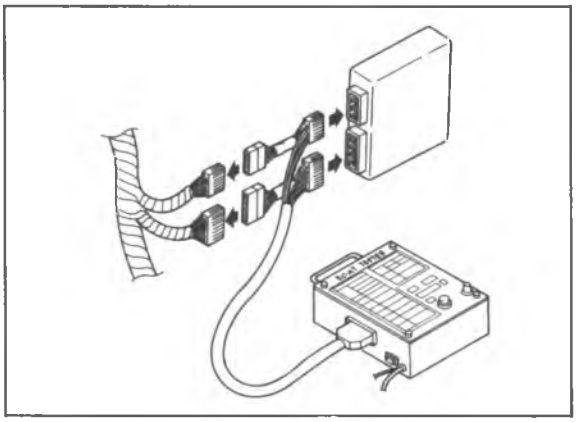

86U07B-031

Inspection Procedure
1. Disconnect the connectors from the EC-AT control unit.
2. Connect the adaptor harness between the control unit and the connectors.
3. Turn the ignition switch and main switch ON.
4. Check indication of the respective light or digital display in each condition, referring to the indication table below.

Indication table of light and digital display

Item		Indication	Condition	Possible cause
Input (Light)				
INHIBITOR SW	L	ON	L range	Inhibitor switch or wiring
		OFF	Other ranges	
	S	ON	S range	
		OFF	Other ranges	
	D	ON	D range	
		OFF	Other ranges	
	P,N	ON	P or N range	
		OFF	Other ranges	
HOLD SW		ON	Hold switch pushed	Hold switch or wiring
		OFF	Hold switch released	
MODE SW		ON	Power mode	Mode switch or wiring
		OFF	Economy mode	
IDLE SW		ON	Throttle valve fully closed	Idle switch or wiring
		OFF	Throttle valve open	

Item	Indication	Condition	Possible cause
BRAKE LIGHT SW	ON	Brake pedal depressed	Brake light switch or wiring
	OFF	Brake pedal released	
WATER TEMP SW	ON	Coolant temperature 72°C (162°F) or above	Water temp switch or wiring
	OFF	Coolant temperature lower than 65°C (149°F)	
ATF TEMP SW	ON	ATF temperature 150°C (302°F) or above	Fluid temperature switch or wiring
	OFF	ATF temperature lower than 143°C (289°F)	
CRUISE CONTROL SW	Not used	—	—
Input (Digital display)			
THROTTLE SENSOR	EC-AT control unit terminal voltage	All the time	Throttle sensor, idle switch or wirings
VEHICLE SPEED*	Vehicle speed calculated from speed sensor signal	All the time	Vehicle speed sensor, speedometer cable, or wiring
DRUM SPEED*	Drum speed	All the time	Pulse generator or wirings
Output (Light)			
1-2 SOLENOID VALVE*	ON	Refer to page 7B—24 solenoid valve operation table	Control unit, 1-2 shift sol., or wiring
	OFF		
2-3 SOLENOID VALVE*	ON		Control unit, 2-3 shift sol., or wiring
	OFF		
3-4 SOLENOID VALVE*	ON		Control unit, 3-4 shift sol., or wiring
	OFF		
LOCK-UP SOLENOID VALVE*	ON	Lock-up condition	Control unit, lock-up sol., or wiring
	OFF	Non-lock-up condition	
HOLD INDICATOR	ON	Hold mode	Control unit, hold switch, or wiring
	OFF	Other modes	
MODE INDICATOR	ON	Power or economy mode	Control unit, hold switch, mode switch, or wiring
	OFF	Hold mode	
NO LOAD SIGNAL*	ON	N or P range	Control unit, pluse generator, inhibitor switch or wiring
	OFF	Other range	

86U07B-032

Item	Indication	Condition
OUTPUT (Digital display)		
GEAR*	1	1st gear position
	2	2nd gear position
	3	3rd gear position
	4	Overdrive (OD) gear position

86U07B-033

Note
a) The back-up condition is as following condition
S range, hold mode, and the accelerator pedal depressed fully.
b) The * marked items must be checked with the engine running or while driving.

Comprehensive Usage
The **EC-AT Tester** can be used to inspect slippage of friction elements, shift points, and shift sequence during the road test.
The inspection procedure is shown in STEP 7 (ROAD TEST).

Solenoid valve operation table

RANGE		GEAR			SOLENOID VALVES			
					1-2	2-3	3-4	Lock-up
P		Non					ON	
R		Reverse			ON			
N		—	Below approx. 18 km/h (11 mph)				ON	
			Above approx. 18 km/h (11 mph)		ON			
D		1st				ON	ON	
		2nd			ON	ON	ON	
		3rd	Below approx. 40 km/h (25 mph)					
			Above approx. 40 km/h (25 mph)	Lock-up OFF	ON			
				Lock-up ON	ON			ON
		OD	Lock-up OFF		ON		ON	
			Lock-up ON		ON		ON	ON
S		1st				ON	ON	
		2nd			ON	ON	ON	
		3rd	Below approx. 40 km/h (25 mph)					
			Above approx. 40 km/h (25 mph)		ON			
L		1st				ON	ON	
		2nd	Below approx. 110 km/h (68 mph)		ON	ON		
			Above approx. 110 km/h (68 mph)		ON			
HOLD	D	2nd			ON	ON	ON	
		3rd	Below approx. 40 km/h (25 mph)					
			Above approx. 40 km/h (25 mph)		ON			
	S	2nd			ON	ON		
		3rd	Below approx. 40 km/h (25 mph)					
			Above approx. 40 km/h (25 mph)		ON			
	L	1st				ON		
		2nd	Below approx. 110 km/h (68 mph)		ON	ON		
			Above approx. 110 km/h (68 mph)		ON			

STEP 4 (STALL TEST)
This step is performed to determine if there is slippage of the friction elements or malfunction of the hydraulic components.

Preparation
Check the following items prior to testing:
1. Engine coolant, engine oil and ATF levels.
2. Warm the engine thoroughly to raise the ATF temperature to operating level (50—80°C, 122—176°F).
3. Engage the parking brake and use wheel chocks at the front and rear wheels.

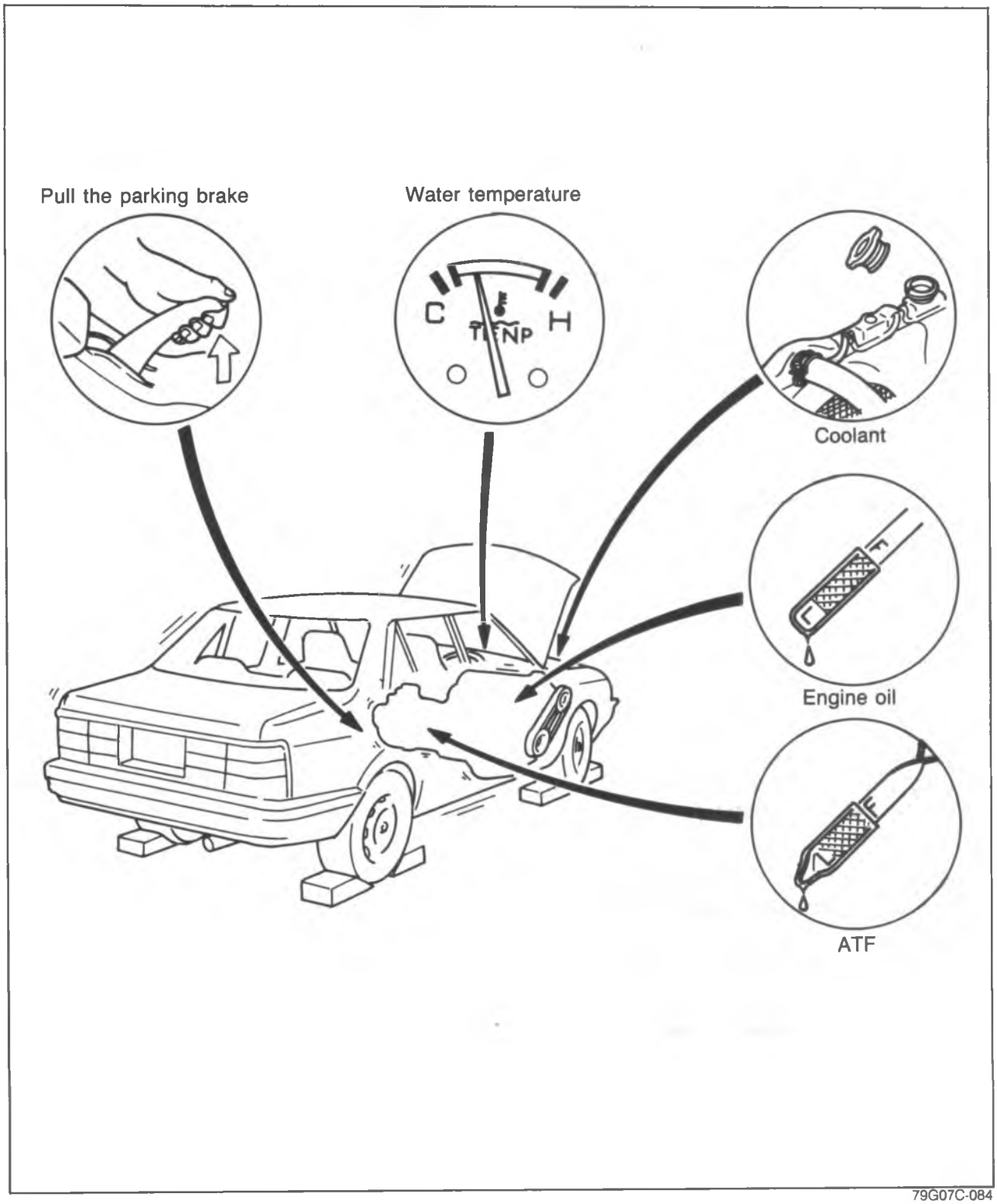

79G07C-084

Procedure

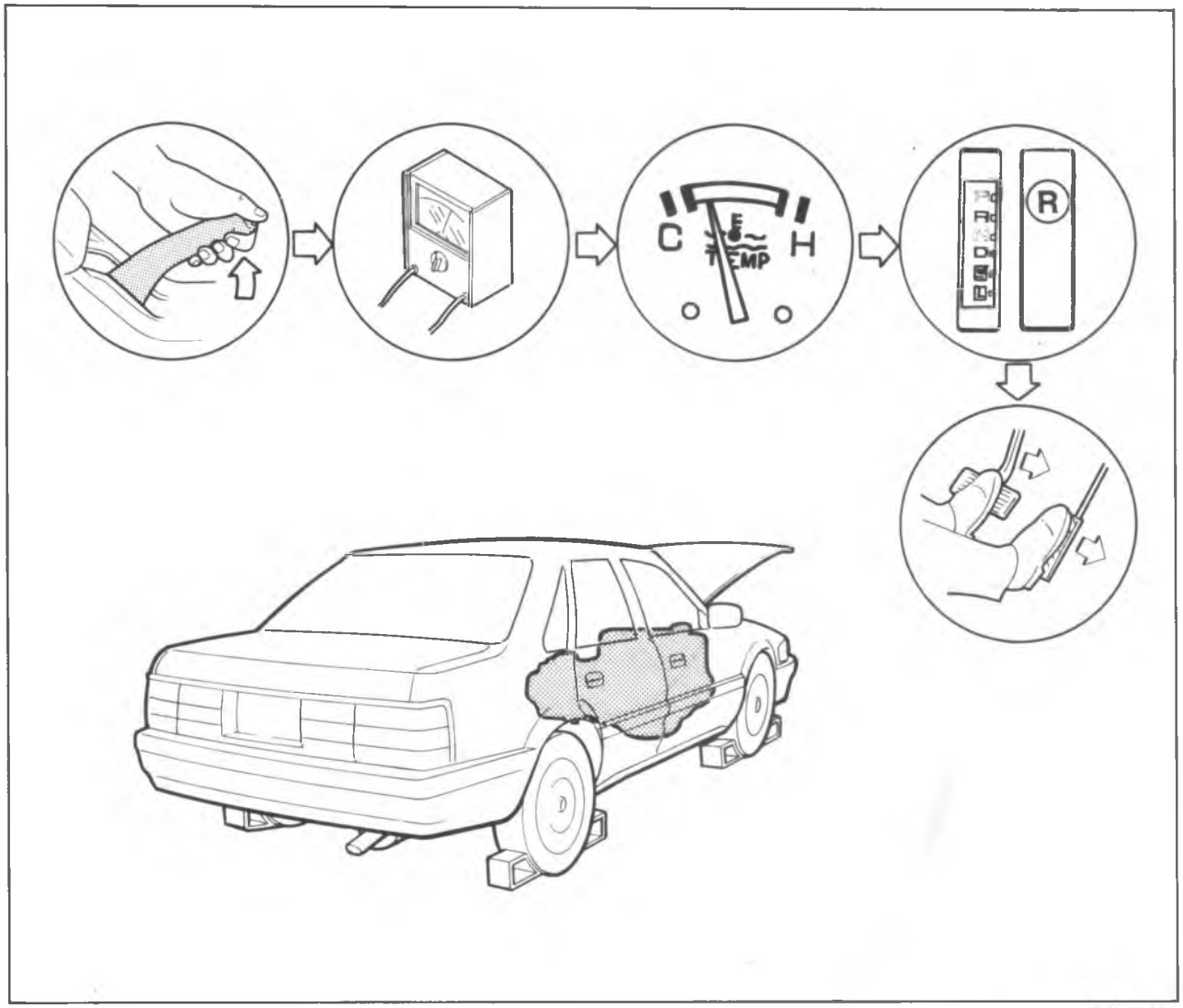

86U07B-034

1. Block the wheels and apply the parking brake.
2. Connect a tachometer to the engine.
3. Shift the selector lever to "R".
4. Firmly depress the foot brake with the left foot, and gently depress the accelerator pedal with the right.
5. When the engine speed no longer increases, quickly read the engine speed and release the accelerator.

   Caution
   Steps 4 → 5 must be done within 5 seconds.

6. Move the selector lever to "N" and let the engine idle for at least one minute.

   Caution
   The reason for idling for at least one minute is to cool the ATF and to prevent deterioration of the fluid.

7. Perform the stall test for the following ranges in the same manner.
   (1) "D" range
   (2) "D" range (Hold)
   (3) "S" range (Hold)
   (4) "L" range
   (5) "L" range (Hold)

Caution
Be sure to allow sufficient cooling time between each stall test.
Engine stall speed: Non-Turbo
D.S.L range 2,120—2,420 rpm
R range 2,080—2,380 rpm
Turbo
D.S.L range 2,550—2,850 rpm
R range 2,500—2,800 rpm

Note
The stall test can be performed with the EC-AT Tester in place of a tachometer.
Drum stall speed indication: 0 rpm

86U07B-035

Evaluation

Condition		Possible cause	
Above specification	In all ranges	Insufficient line pressure	Worn oil pump
			Oil leakage from oil pump, control valve, and/or transmission case
			Stuck pressure regulator valve
	In forward ranges	Forward clutch slipping One-way clutch 1 slipping	
	In "D" range	One-way clutch 2 slipping	
	In "S" (Hold) and "L" (Hold) ranges	Coasting clutch slipping	
	In "D" (Hold) and "S" (Hold) ranges	2-4 brake band slipping	
	In "R", "L" and "L" (Hold) ranges	Low and reverse brake slipping	
	In "R" range	Low and reverse brake slipping Reverse cluch slipping Perform road test to determine whether problem is low and reverse brake or reverse clutch a) Engine brake applied in 1st ...Reverse clutch b) Engine brake not applied in 1st ...Low and reverse brake	
Within specification		All shift control elements within transmission are functioning normally.	
Below specification		Engine out of tune	
		One-way clutch slipping within torque converter	

86U07B-036

STEP 5 (TIME LAG TEST)

If the selector lever is shifted while the engine is idling, there will be a certain time lapse, or time lag, before shock is felt. This step checks this time lag for checking condition of the 1-2, N-R, and N-D accumulators, forward, and one-way clutches, 2-4 brake band, and low and reverse brake.

Preparation

Perform the preparation procedure shown in the STEP 4 (STALL TEST).

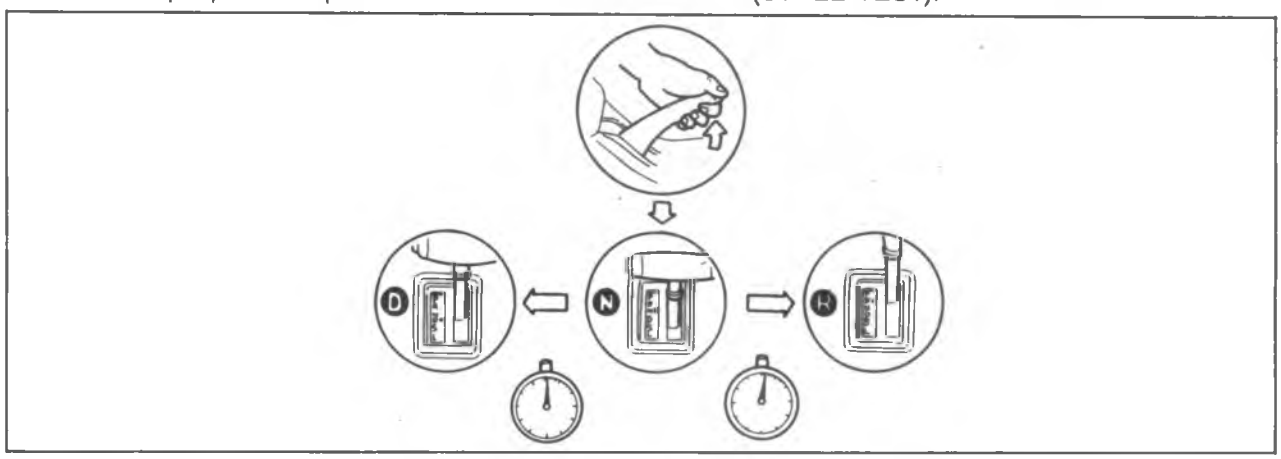

86U07B-037

Procedure

1. Start the engine and check the idle speed in P range.

   Idle speed:
   Non-Turbo 750 $^{+50}_{-0}$ rpm
   Turbo 750 ± 25 rpm

2. Shift from N range to D range
3. Measure the time it takes from shifting until shock is felt, with a stop watch.
4. Shift the selector to N range and run the engine at idle speed for at least one minute.
5. Perform the test for the following shifts in the same manner.
   (1) N → D range (Hold mode)
   (2) N → R range

   Note
   Make three measurements for each test and take the average value.

   Specified time lag: N → D range ..... 0.5—1.0 second
   N → R range ..... 0.5—1.0 second

Evaluation

Condition		Possible Cause
N → D (Economy) shifting	More than specification	Insufficient line pressure Forward clutch slipping One-way clutch 1 slipping One-way clutch 2 slipping
	Less than specification	N-D accumulator not operating properly Excessive line pressure
N → D (Hold) shifting	More than specification	Insufficient line pressure Forward clutch slipping 2-4 brake band slipping One-way clutch 1 slipping
	Less than specification	1-2 accumulator not operating properly Excessive line pressure
N → R shifting	More than specification	Insufficient line pressure Low and reverse brake slipping Revese clutch slipping
	Less than specification	N-R accumulator not operating properly Excessive line pressure

86U07B-038

STEP 6 (OIL PRESSURE TEST)
This step checks line pressures for checking the hydraulic components and for oil leakage.

Line Pressure Test
Preparation
1. Perform the preparation procedure shown in STEP 4 (STALL TEST).
2. Connect a tachometer to the engine.
3. Connect the **SST** to the line pressure inspection hole (sequare head plug "L")

Procedure

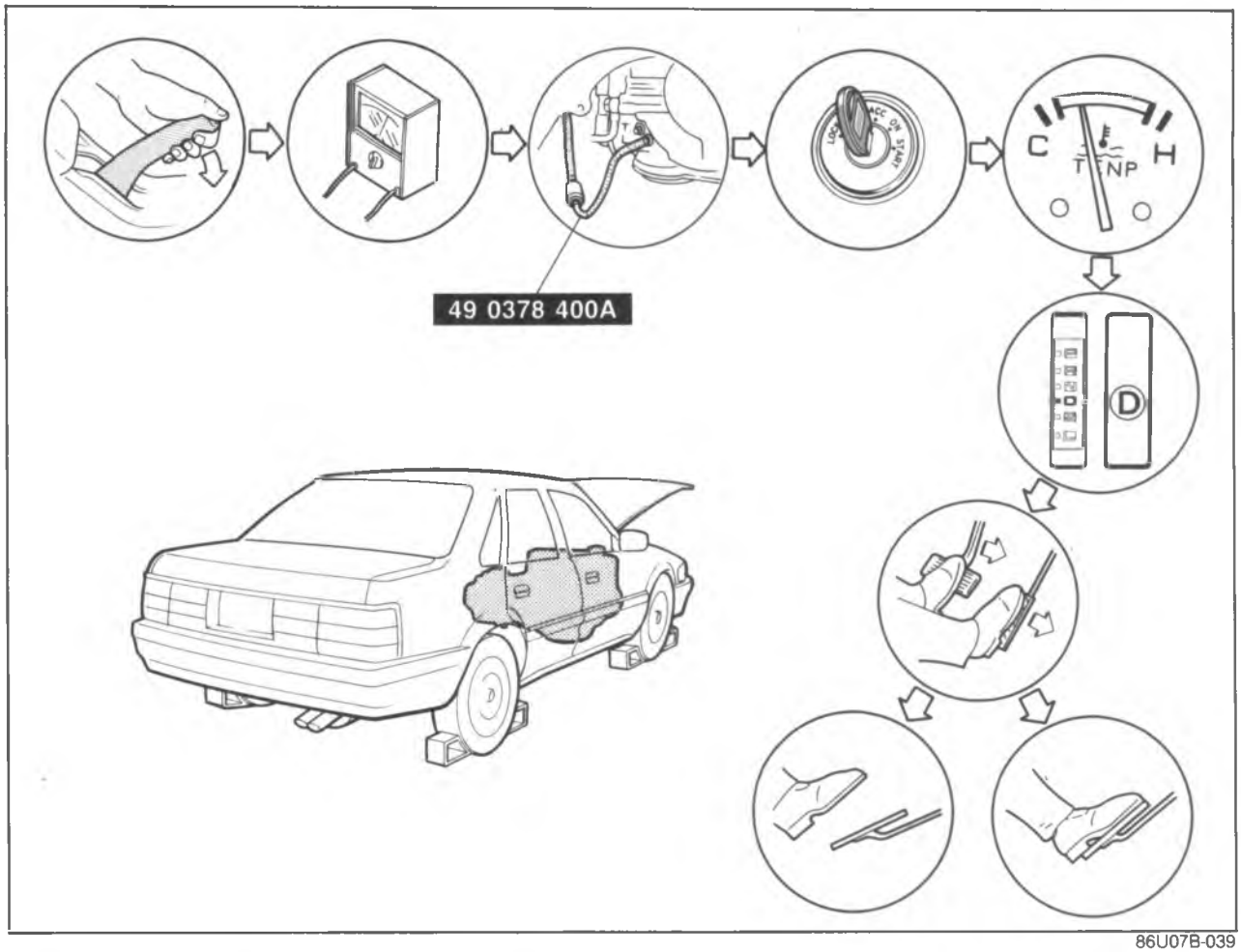

86U07B-039

1. Start the engine and check the idle speed in P range

   Idle speed:
   Non-Turbo 750 $^{+50}_{-0}$ rpm
   Turbo 750 ± 25 rpm

2. Shift the selector lever to D range and read the line pressure at idle.
3. Depress the brake pedal firmly with the left foot and gradually depress the accelerator pedal with the right foot.
4. Read the line pressure as soon as the engine speed becomes constant, then release the accelerator pedal.

   Caution
   Steps 3 to 4 must be performed within 5 seconds.

5. Shift the selector lever to N range and run the engine at idle for at least one minute.
6. Read the line pressure at idle and engine stall speeds for each range in the same manner.

	Line pressure kPa, (kg/cm^2, psi)	
Range	D S L	R
When idling	353—432 (3.6—4.4, 51—63)	598—942 (6.1—9.6, 87—137)
At stall speed	873—1040 (8.9—10.6, 127—151)	1668—2011 (17:0—20.5, 242—292)

86U07B-040

Evaluation of line pressure test

Line pressure	Possible location of problem
Low pressure in every position	Worn oil pump Fluid leaking from oil pump, control valve body, or transaxle case Pressure regulator valve sticking
Low pressure in "D" and "S" only	Fluid leaking from hydraulic circuit of forward clutch
Low pressure in "R" only	Fluid leaking from hydraulic circuit of low and reverse brake
Higher than specification	Throttle valve sticking Throttle modulator valve sticking Pressure regulator valve sticking

86U07B-041

Throttle Pressure Test

This step checks line pressure for checking the hydraulic components and for improper adjustment of throttle cable.

Preparation

1. Perform the preparation procedure shown in STEP 4 (STALL TEST).
2. Connect a tachometer to the engine.
3. Connect the **SST** to the throttle pressure inspection hole (square head plug "T").

Procedure

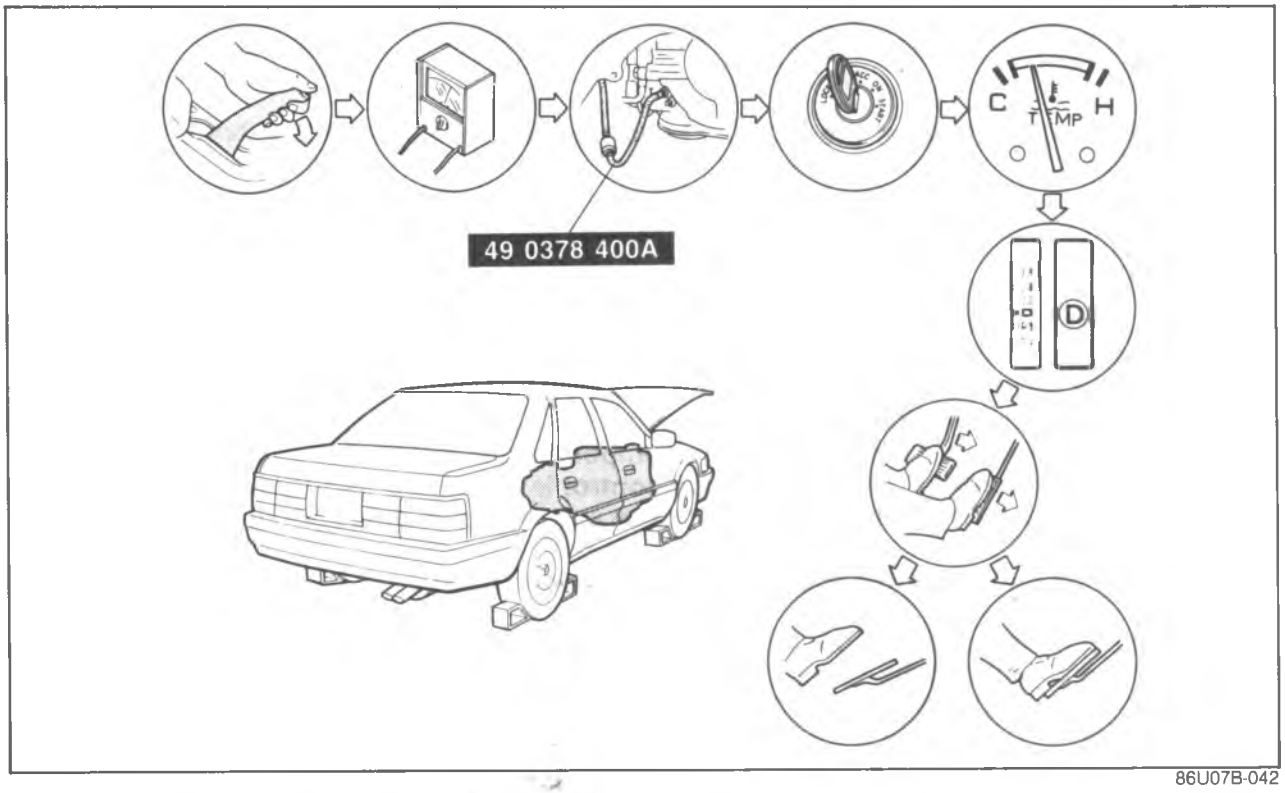

86U07B-042

1. Start the engine and check the idle speed in P range.

   Idle speed
   Non-Turbo 750 $^{+50}_{-0}$ rpm
   Turbo 750 ± 25 rpm

2. Shift the selector lever to D range and read the throttle pressure at idle.
3. Depress the brake pedal firmly with the left foot and gradually depress the accelerator pedal with the right foot.
4. Read the throttle pressure as soon as the engine speed becomes constant, then release the accelerator pedal.

   Caution
   Steps 3 to 4 must be performed within 5 seconds.

	Throttle pressure kPa (kg/cm^2, psi)
When idling	39—88 (0.4—0.9, 6—13)
At stall speed	471—589 (4.8—6.0, 68—85)

Evaluation of throttle pressure test

Throttle pressure	Possible location of problem
Not within specification	Throttle valve sticking Pressure regulator valve sticking Improper adjustment of throttle cable

STEP 7 (ROAD TEST)
This step is performed to inspect for problems at the various ranges. If these tests show any problems, adjust or replace by referring to the electronic system component or mechanical sections.

Caution
Perform the test at normal ATF operating temperature (50—80°C, 122—176°F).

D Range Test
Shift point, shift pattern, and shift shock
1. Shift the selector lever to D range and select the Power mode.
2. Accelerate the vehicle with half and full throttle valve opening.

Note
Throttle sensor voltage of the EC-AT Tester represents the throttle valve opening.

3. Check that 1-2, 2-3 and 3-OD up-shifts and downshifts and lock-up are obtained. The shift points must be as shown in the D range (Power) shift diagram.

Note
a) Drum speed (rpm) of the EC-AT Tester represents the shift point.
b) Vehicle speed of the EC-AT Tester and speedometer and vehicle speed on a chassis roller may not meet the specified shift pattern because of tire size. Therefore, check the shift points with the Drum speed.
c) There is no lock-up when the coolant temperature is below 72°C (162°F).
d) There is no overdrive when the cruise control is operating and there is a 3 km/h (1.9 mph) difference between the pre-set cruise speed and vehicle speed, or set or resume switch is ON.
e) There is no lock-up when the brake pedal is depressed.

4. Check the up-shifts for shift shock or slippage in the same manner.
5. While driving in OD, shift the selector lever to S range and check that 4-3 downshift immediately occurs, then decelerate and check that engine braking effect is felt in only 3rd gear.

Non-Turbo (Power)

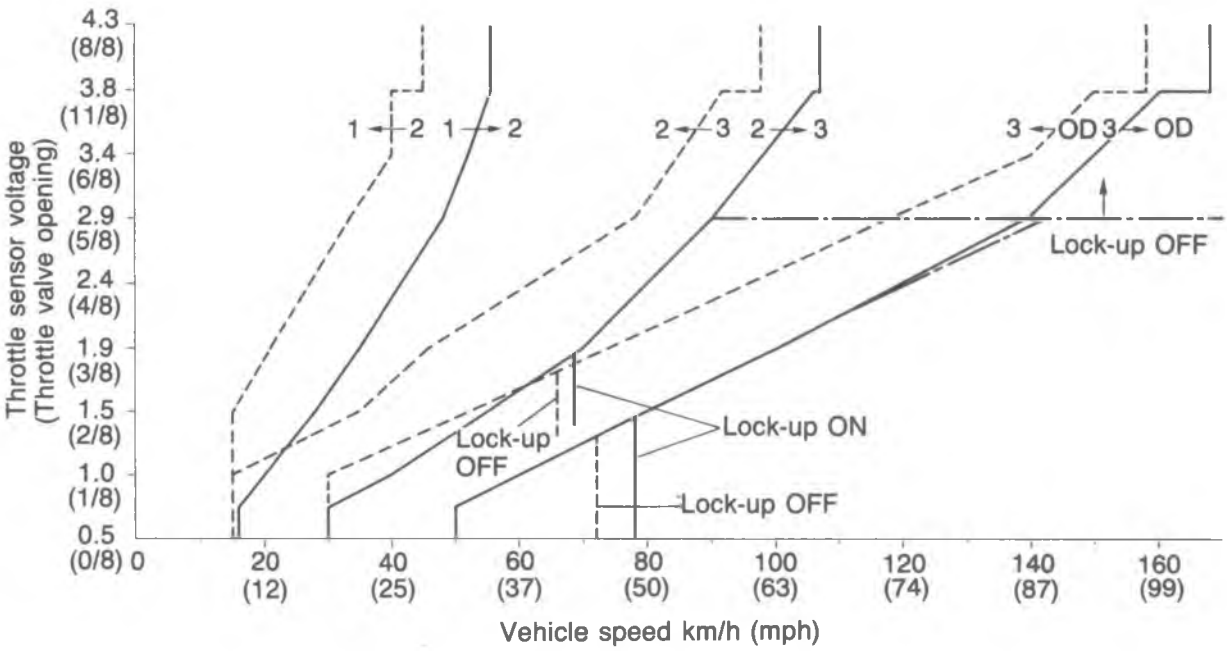

79G07C-093

Turbo (Power)

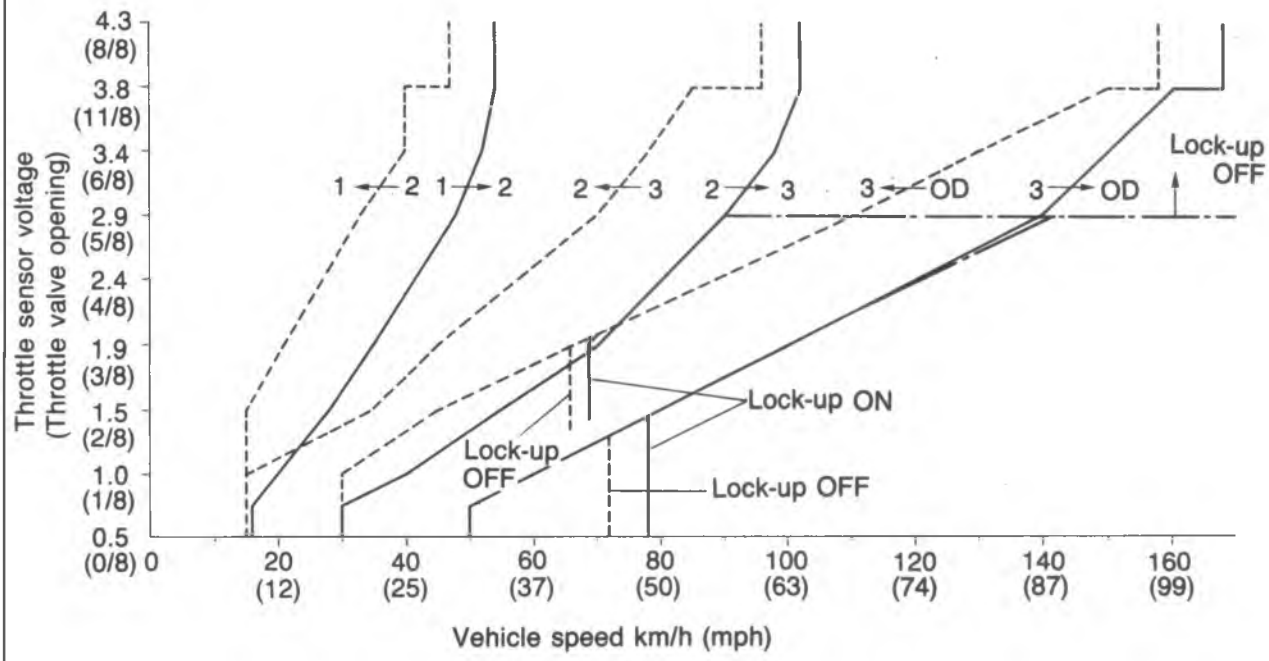

Non-Turbo (Economy)

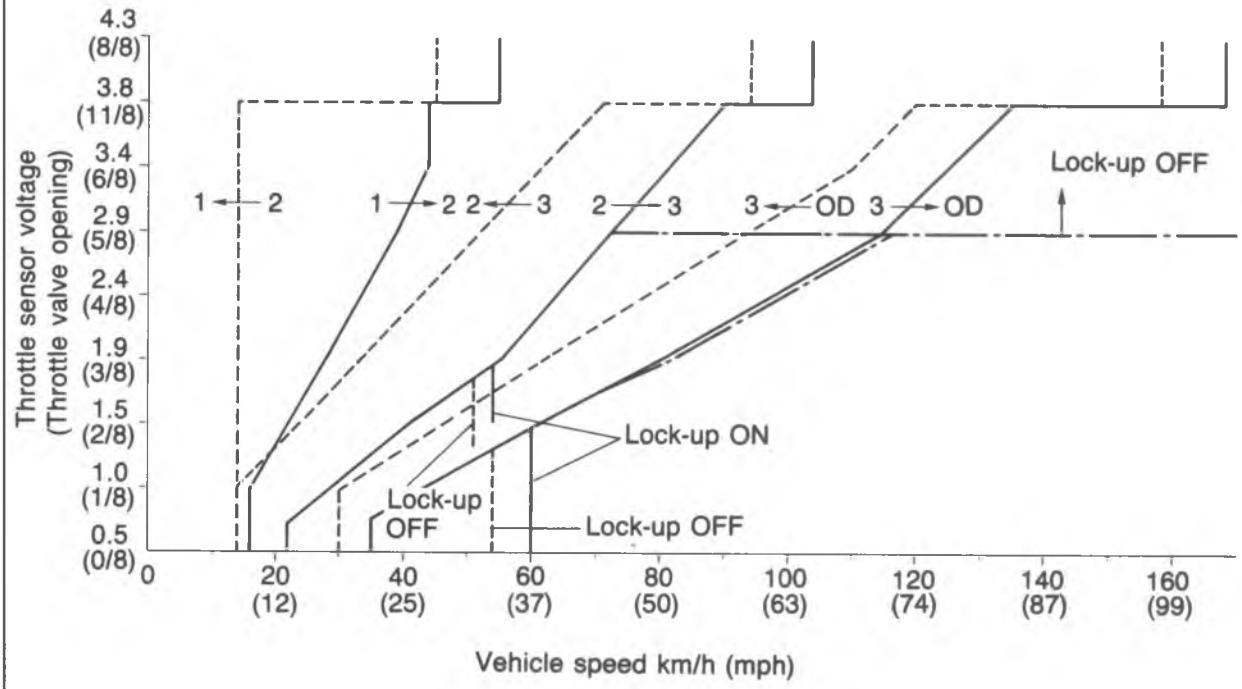

Turbo (Economy)

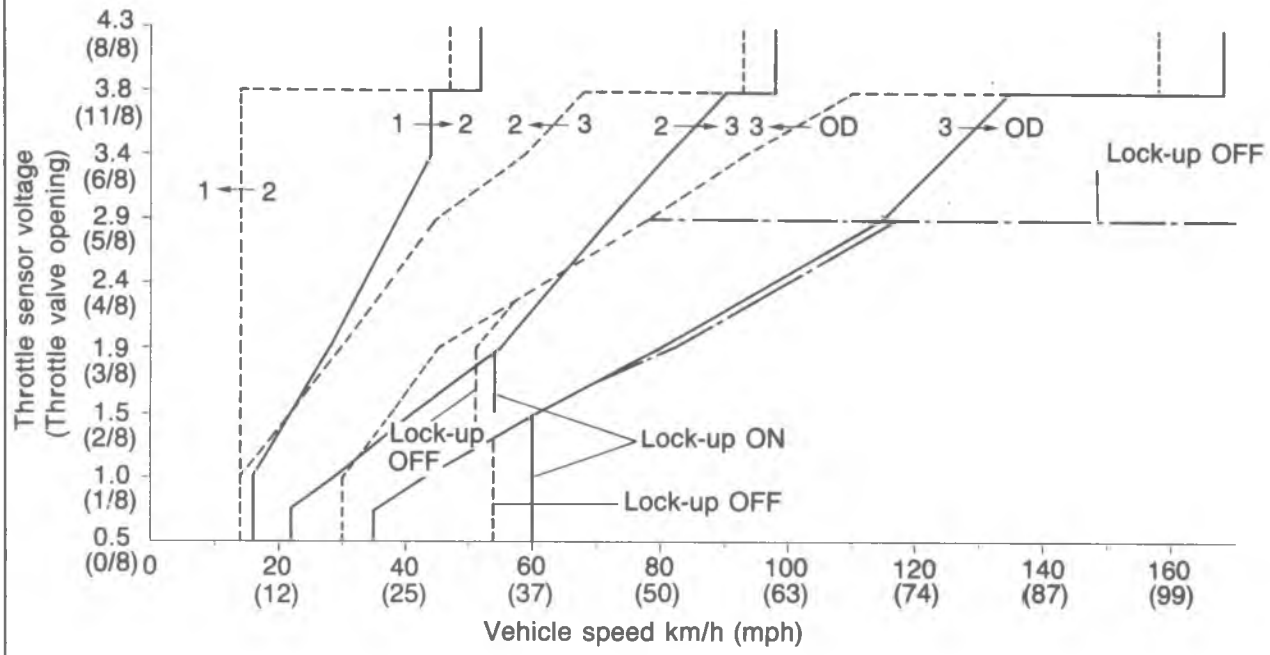

7. Select D range (Hold mode).
8. Accelerate the vehicle and check 2-3 up- and down-shifts, no 1st, and no OD is obtained and that the 2-3 shift points are as shown in the D range (Hold) shift diagram.

Non-Turbo

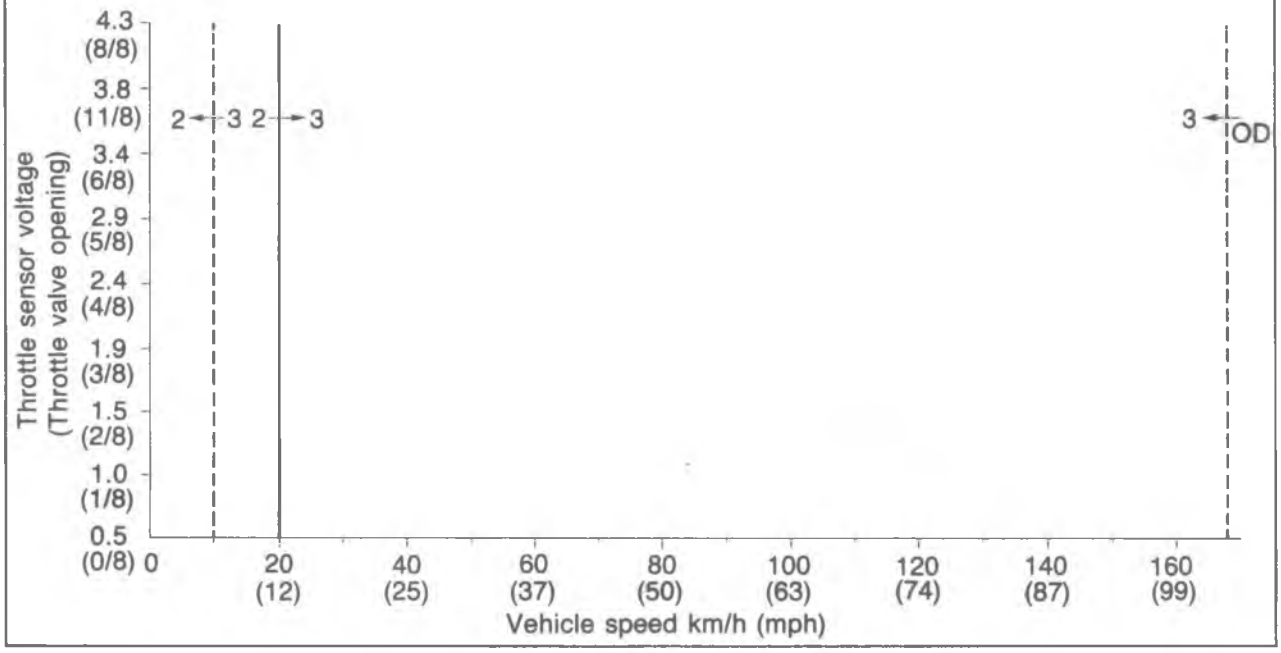

79G07C-094

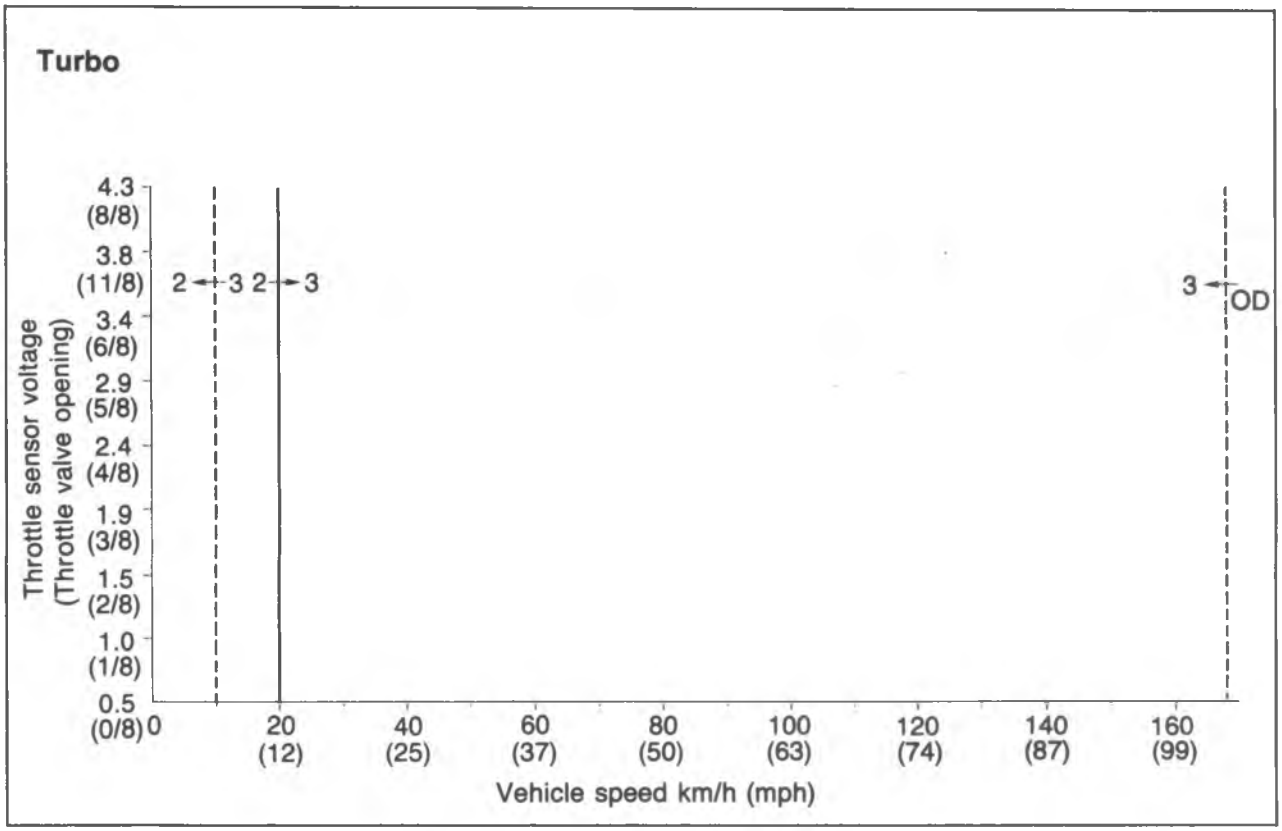

Evaluation

Condition	Possible Cause
No 1-2 up- or down-shift	Stuck 1-2 shift solenoid valve Stuck 1-2 shift valve
No 2-3 up- or down-shift	Stuck 2-3 shift solenoid valve Stuck 2-3 shift valve
No 3-OD up- or down-shift	Stuck 3-4 shift solenoid valve Stuck 3-4 shift valve
No lock-up shift	Stuck lock-up control solenoid valve Stuck lock-up control valve
Incorrect shift point	Mis-adjusted throttle sensor Sticking shift valves
Excessive shift shock or slippage	Excessive shift shock Stuck accumulators Stuck or no one-way check orifice Worn clutches, brakes, or one-way clutch
No engine braking effect	Worn clutches or brakes

79G07C-095

Noise and vibration

Drive the vehicle in OD (lock-up), OD (no lock-up), 3rd (Hold) and check for abnormal noise or vibration.

Note
Abnormal noise and vibration can also be caused by the torque converter, drive shaft, or differential. Therefore, checking of cause must be made with extreme care.

Kick-down

Drive the vehicle in OD, 3rd and 2nd gears and check that kick-down occurs for OD→3, OD→2, OD→1, 3→2, 3→1, 2→ 1, and the shift points are as shown in the shift diagram.

S Range Test
Shift pattern

1. Shift the selector lever to S range and select the Economy mode.
2. Accelerate the vehicle and check that 1-2 and 2-3 up-shifts and down-shifts are obtained, and that no overdrive and no lock-up are obtained.

Note
a) Inspections of shift shock and shift point are not necessary because these are the same as those of the D Range Test.
b) In S range, the shift patterns for Economy and Power modes are the same.
c) Shift points are the same as those of the D range (Power) shift diagram.

3. While driving in S range (Economy mode) and 3rd gear, select the Hold mode and check that 3rd gear is held until the 3-2 down-shift point as shown in the S range (Hold) shift diagram is achieved.
4. Accelerate the vehicle with S range (Hold mode) and check that 2nd gear is held.

Non-Turbo

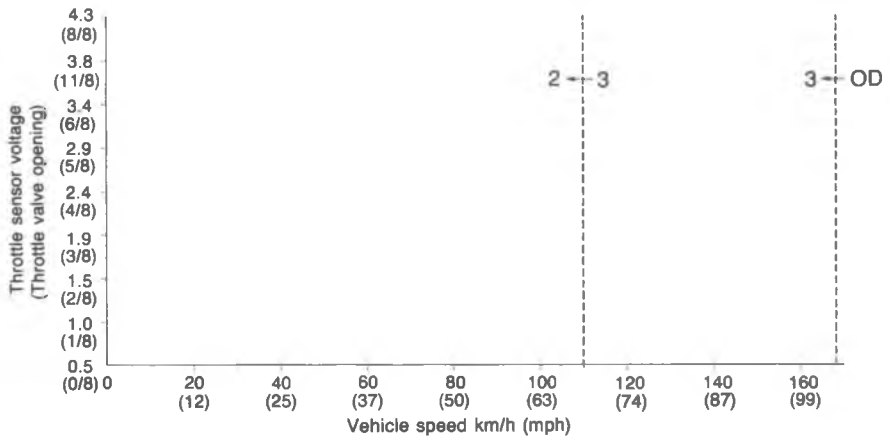

Turbo

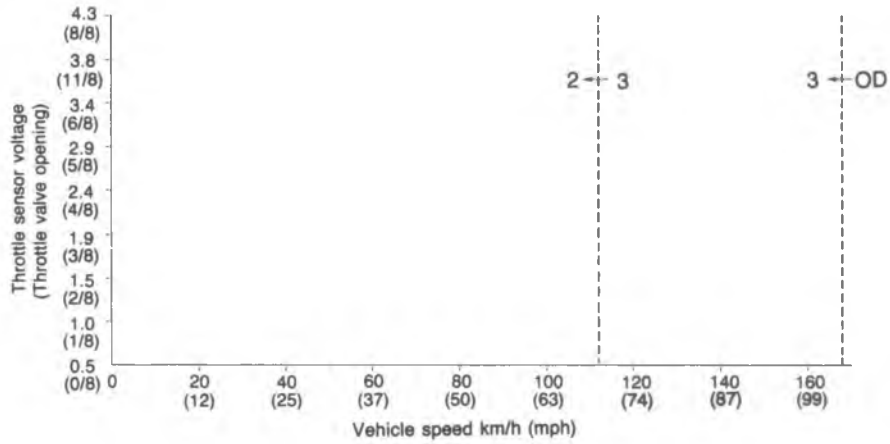

79G07C-096

Noise and vibration
Drive the vehicle in 2nd gear (Hold mode) and check for abnormal noise or vibration.

Note
Abnormal noise and vibration can also be caused by the torque converter, drive shaft or differential. Therefore, checking of cause must be made with extreme care.

L Range Test
Shift pattern

1. Shift the selector lever to L range and select the mode.
2. Accelerate the vehicle and check that the 1-2 up- and down-shiftings are obtained and that no 3rd gear, no OD, and no lock-up are obtained.

   Note
   Inspection of shift shock and shift point are not necessary because these are the same as those of the D Range Test.

3. Drive in 1st gear then decelerate and check that engine braking effect is felt.

   Note
   a) In L range, the shift patterns for Economy and Power modes are the same.
   b) Shift points are the same as those of the D range (Power) shift diagram.

4. While driving in S range (Hold mode) and 2nd gear, shift the selector lever to L range and check that 2nd gear is held until the 2-1 down-shift point as shown in the L range (Hold) shift diagram is achieved.
5. Accelerate the vehicle in L range (Hold mode) and check that 1st gear is held.

Non-Turbo

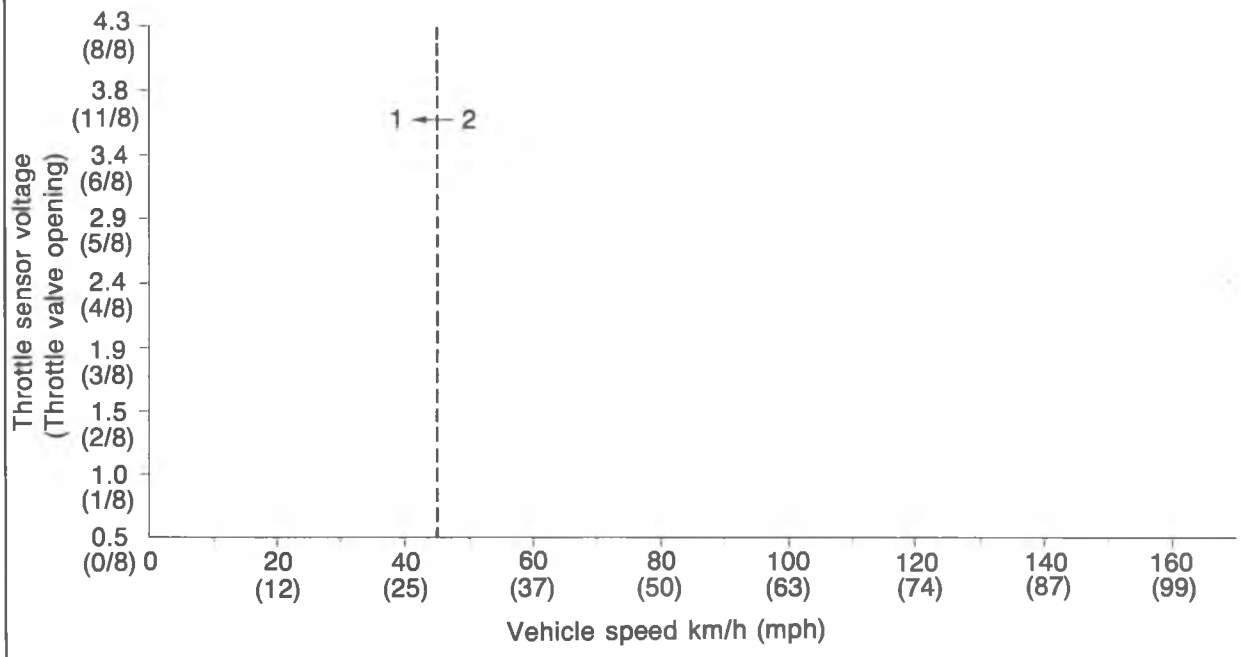

86U07B-043

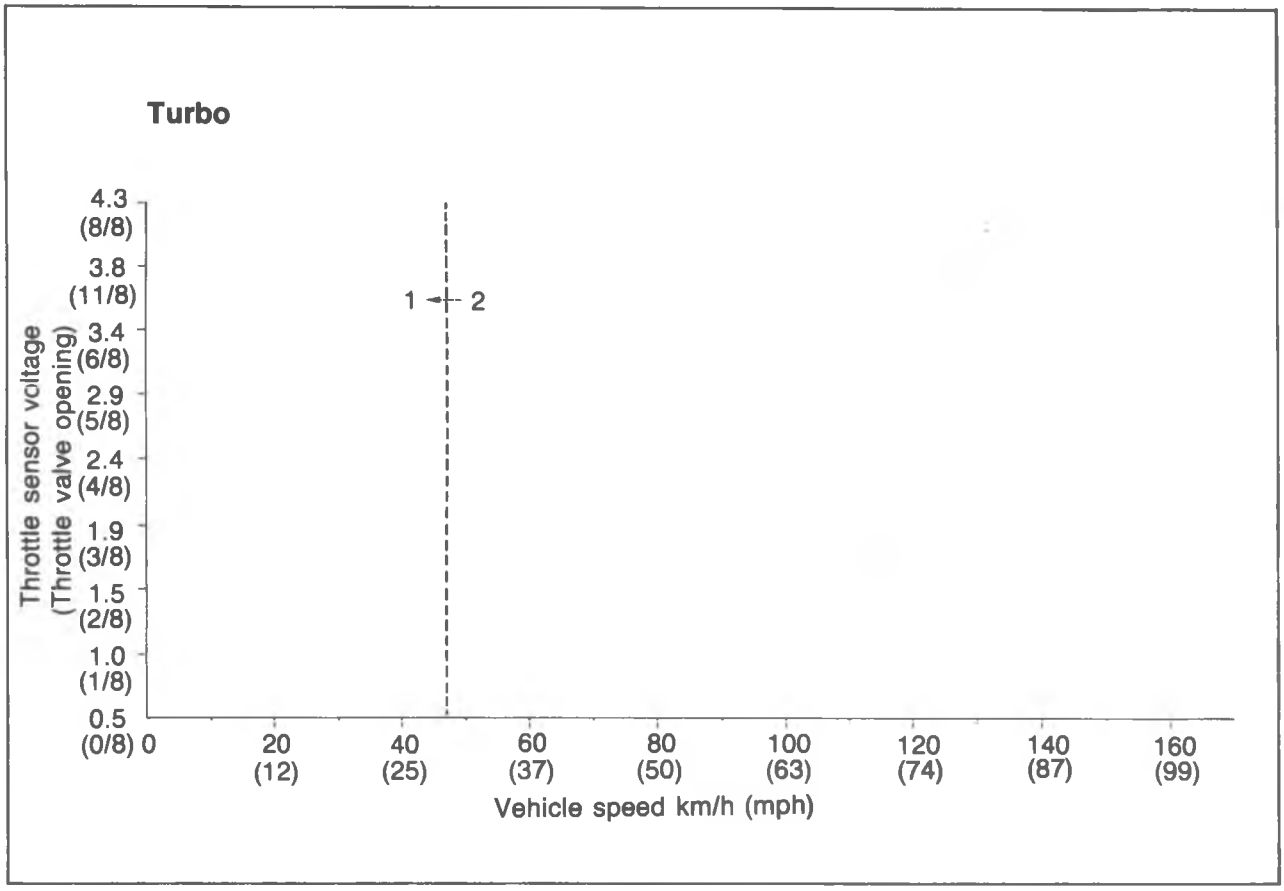

86U07B-044

Noise and vibration

Drive the vehicle in 1st gear (Hold mode) and check for abnormal noise or vibration.

Note

Abnormal noise and vibration can also be caused by the torque converter, drive shaft or differential. Therefore, checking of cause must be made with extreme care.

P Range Test

1. Shift into P range on a gentle slope, release the brake and check that the vehicle does not roll.
2. Shift into P range while driving the vehicle at maximum of 4 km/h (2.5 mph) on a level surface, and check that the vehicle stops.

Vehicle Speed at Gearshift Table

Range Mode		Throttle condition (Throttle sensor voltage)	Shifting	Drum speed rpm		Vehicle speed km/h (mph)	
				Non-Turbo	Turbo	Non-Turbo	Turbo
Power	D	Fully opened (4.3 volt)	$D_1 \rightarrow D_2$	5000—5500	4900—5500	54—56 (33—35)	53—59 (33—37)
			$D_2 \rightarrow D_3$	5300—5700	5100—5500	105—113 (65—70)	100—108 (62—67)
			$D_3 \rightarrow OD$	5400—5700	5450—5800	165—175 (102—109)	
		Half throttle (1.6—2.2 volt)	$D_1 \rightarrow D_2$	3500—4050	3550—4150	38—44 (24—27)	
			$D_2 \rightarrow D_3$	3750—4250	3850—4350	75—85 (47—53)	
			$D_3 \rightarrow OD$	3600—4250	3650—4300	110—130 (68—81)	
			Lock-up ON (OD)	2500—3000	2800—3000	110—130 (68—81)	
			Lock-up OFF (OD)	2400—2850	2400—2900	104—124 (64—77)	
			$OD \rightarrow D_3$	1950—2450	1800—2300	85—107 (53—66)	77—99 (48—61)
			$D_3 \rightarrow D_2$	1750—2300	1700—2100	54—70 (33—43)	51—63 (32—39)
		Kick-down	$OD \rightarrow D_3$	3500—3700	3550—3800	153—163 (95—101)	
			$OD \rightarrow D_2$	2150—2350	2150—2300	94—102 (58—63)	92—100 (57—62)
			$OD \rightarrow D_1$	950—1100	1000—1150	42—48 (26—30)	44—50 (27—31)
			$D_3 \rightarrow D_2$	3050—3350	3050—3300	94—102 (40—63)	92—100 (57—62)
			$D_3 \rightarrow D_1$	1350—1550	1450—1650	42—48 (26—30)	44—50 (27—31)
			$D_2 \rightarrow D_1$	2200—2400	2250—2550	42—48 (26—30)	44—50 (27—31)
Economy		Fully opened (4.3 volt)	$D_1 \rightarrow D_2$	4900—5450	4750—5300	54—60 (33—37)	51—57 (32—35)
			$D_2 \rightarrow D_3$	5100—5500	4900—5300	102—110 (63—68)	96—104 (60—64)
			$D_3 \rightarrow OD$	5400—5700	5450—5800	165—175 (102—109)	
		Half throttle (1.6—2.2 volt)	$D_1 \rightarrow D_2$	2800—3350	3200—3850	31—37 (19—23)	
			$D_2 \rightarrow D_3$	3000—3400	3450—3900	60—68 (37—42)	
			$D_3 \rightarrow OD$	2900—3450	3350—4000	89—107 (55—66)	
			Lock-up ON (OD)	2050—2500	2400—2850	91—109 (56—68)	
			Lock-up OFF (OD)	1950—2350	2250—2700	85—103 (53—64)	
			$OD \rightarrow D_3$	1600—1950	1400—1850	70—86 (43—53)	54—70 (33—43)
			$D_3 \rightarrow D_2$	1200—1550	1250—1550	38—48 (24—30)	34—42 (21—26)
		Kick-down	$OD \rightarrow D_3$	3500—3700	3550—3800	153—163 (95—101)	
			$OD \rightarrow D_2$	2050—2250		90—98 (56—61)	89—97 (55—60)
			$OD \rightarrow D_1$	950—1100	1000—1150	42—48 (26—30)	44—50 (27—31)
			$D_3 \rightarrow D_2$	2950—3200		90—98 (56—61)	89—97 (55—60)
			$D_3 \rightarrow D_1$	1350—1550	1450—1650	42—48 (26—30)	44—50 (27—31)
			$D_2 \rightarrow D_1$	2100—2400	2250—2550	42—48 (26—30)	44—50 (27—31)
	S	Fully opened (4.3 volt)	$S_1 \rightarrow S_2$	5000—5500	4900—5500	54—56 (33—35)	53—59 (33—37)
			$S_2 \rightarrow S_3$	5300—5700	5100—5500	105—113 (65—70)	100—108 (62—67)
			$S_4 \rightarrow S_3$	3750—4000	3850—4050	165—175 (102—109)	
			$S_3 \rightarrow S_2$	3050—3350	3050—3300	94—102 (40—63)	92—100 (57—62)
			$S_2 \rightarrow S_1$	2200—2400	2250—2550	42—48 (26—30)	44—50 (27—31)
		Half throttle (1.6—2.2 volt)	$S_1 \rightarrow S_2$	3500—4050	3350—4150	38—44 (24—27)	
			$S_2 \rightarrow S_3$	3750—4250	3850—4350	75—85 (47—53)	
			$S_4 \rightarrow S_3$	1950—2450	1800—2300	85—107 (53—66)	77—99 (48—61)
			$S_3 \rightarrow S_2$	1750—2300	1700—2100	54—70 (33—43)	51—63 (32—39)
	L	Fully opened (4.3 volt)	$L_1 \rightarrow L_2$	5000—5500	4900—5500	54—56 (33—35)	53—59 (33—37)
			$L_2 \rightarrow L_1$	2200—2400	2250—2550	42—48 (26—30)	44—50 (27—31)
		Half throttle (1.6—2.2 volt)	$L_1 \rightarrow L_2$	3500—4050	3350—4150	38—44 (24—27)	
Hold	D	—	$D_2 \rightarrow D_3$	850—1150	1000—1350	17—23 (11—14)	
			$D_3 \rightarrow D_2$	250—400	250—500	7—13 (4—8)	
		Fully closed (0.5 volt)	$OD \rightarrow D_3$	3750—4000	4350—4600	165—175 (102—109)	
	S		$S_3 \rightarrow S_2$	3600—3850	4100—4400	110—118 (68—73)	108—116 (67—72)
	L		$L_2 \rightarrow L_1$	2150—2450	2200—2500	43—49 (27—30)	

86U07B-045

Slippage Test
This step is performed to inspect slippage of the friction elements.

Preparation
1. Perform the preparation procedure shown in STEP 4 (STALL TEST).
2. Connect a tachometer to the engine and set it in the cabin.
3. Connect the **EC-AT Tester** and the **adaptor harness** between the EC-AT control unit and wiring harness.

Procedure
Drive the vehicle in each of the gears indicated below and check whether the vehicle speed or engine speed is above or below specification excessively as shown by the drum speed.

Driving condition			Speed	Model	Drum speed (rpm)			
No.	Gears	Other condition			1,000	2,000	3,000	4,000
1	1st	L range, Hold mode	Vehicle speed km/h (mph)	Non-Turbo	11 (7)	22 (11)	33 (20)	44 (27)
				Turbo			32 (20)	43 (27)
2	1st	D range, Economy mode		Non-Turbo	11 (7)	22 (11)	33 (20)	44 (27)
				Turbo			32 (20	43 (27)
3	2nd	S range, Hold mode		Non-Turbo	20 (20)	40 (25)	60 (37)	80 (50)
				Turbo		39 (24)	59 (37)	78 (48)
4	3rd	D range, Hold mode		Non-Turbo	31 (19)	61 (38)	92 (57)	123 (76)
				Turbo	30 (19)	60 (37)	90 (56)	121 (75)
5	OD	D range, Economy mode		Non-Turbo	44 (27)	88 (55)	131 (81)	175 (109)
				Turbo	43 (27)	86 (53)	129 (80)	172 (107)
6	OD	D range, Economy mode, Lock-up	Engine speed (rpm)	Non-Turbo	1,000	2,000	3,000	4,000
				Turbo				

76G07B-731

Evaluation
When there is no malfunction in the electrical system or hydraulic system, but vehicle speed or engine speed is below specification, the problem can be attributed to slippage of the friction elements.

Driving conditions below specification	Possible Cause
No.1 condition only	Low and reverse brake
No.2 condition only	One-way clutch
No.3 condition only	2-4 brake band
No.4 condition only	Coasting clutch
No.5 condition only	3-4 clutch
No.1—No.5 conditions	Forward clutch
No.6 condition only	Look-up piston (in torque converter)

76G07B-732

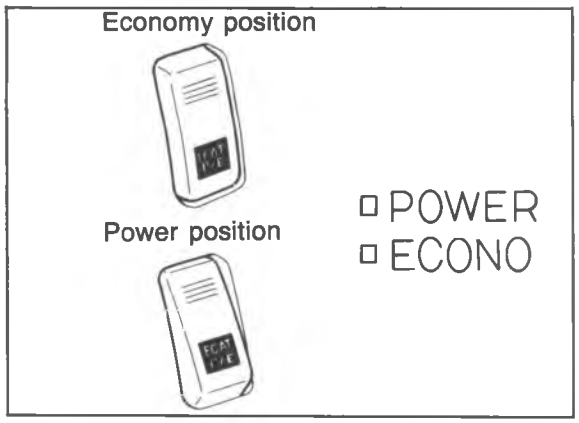

86U07B-048

ELECTRICAL SYSTEM COMPONENTS

MODE SWITCH

Inspection of Operation

1. Turn the ignition switch ON.
2. Check that the mode indicator illuminates at each model.
3. If it is not working properly, check terminal voltage of mode switch.

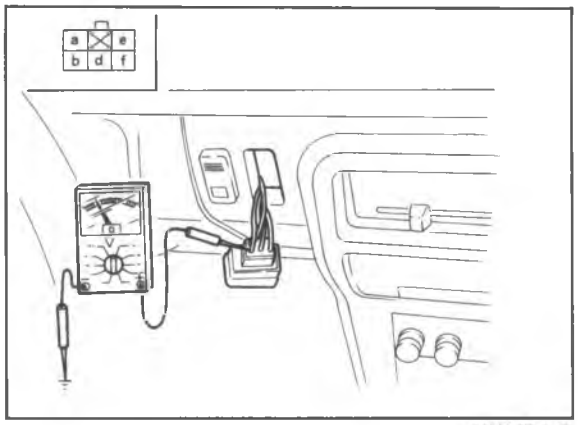

86U07B-049

Inspection of Continuity

1. Disconnect the mode switch.
2. Turn the ignition switch ON and light switch OFF.
3. Check the voltage between each terminal and ground.

Mode	Voltage				
	a	b	d	e	f
Power	Approx. 12V	Below 1.5 V	Below 1.5 V	Below 1.5 V	Below 1.5 V
Economy	Below 1.5 V	Below 1.5 V	Below 1.5 V	Below 1.5 V	Approx. 12V

4. If correct, check for continuty between the terminal.

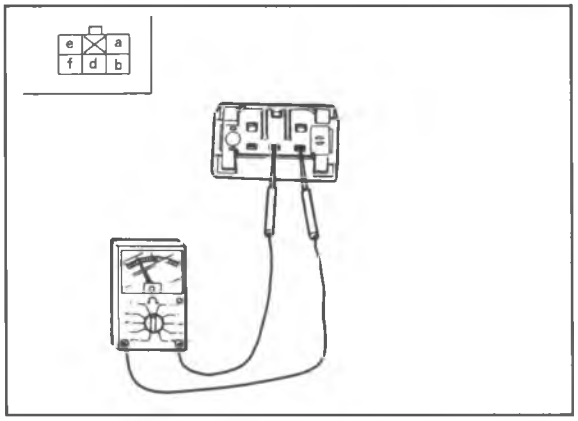

86U07B-050

Inspection of Terminal Voltage

1. Disconnect the mode switch connector.
2. Check continuity of the terminals.

Mode	Connector terminal				
	a	f	d	e	b
Economy	○—○		○—○		
Power	○—○		○		○

○—○: Indicates continuity

3. If not correct, replace the mode switch.

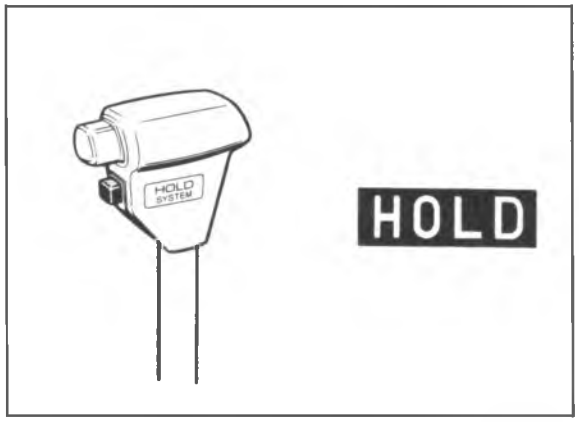

86U07B-051

HOLD SWITCH

Inspection of Operation

1. Turn the ignition switch ON.
2. Check that the hold indicator illuminates while switch depressed. Release the switch and mode indicator lights are out.
3. If it is not working properly, check terminal voltage of hold switch.

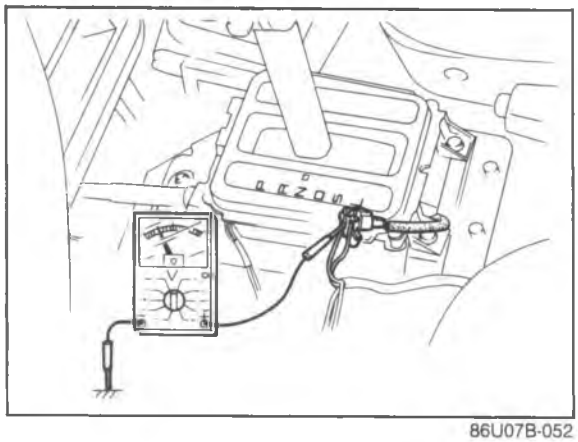

86U07B-052

Inspection of Terminal Voltage

1. Remove the consol box.
2. Turn the ignition switch ON.
3. Check the voltage between the terminal (B) and ground while depressing the switch.

Terminal voltage	Switch
Approx. 12V	Depressed
Below 1.5V	Released

4. If correct, check continuty between the terminal.

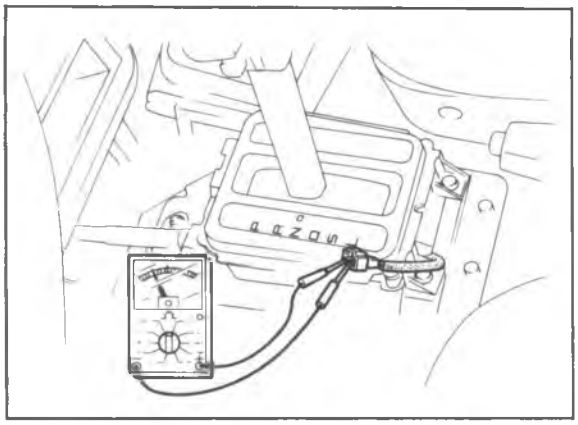

86U07B-053

Inspection of Continuity

1. Disconnect the hold switch connector.
2. Check for continuity between the terminals while depressing the switch.

Continuity	Switch
YES	Released
NO	Depressed

3. If not correct, replace the hold switch.

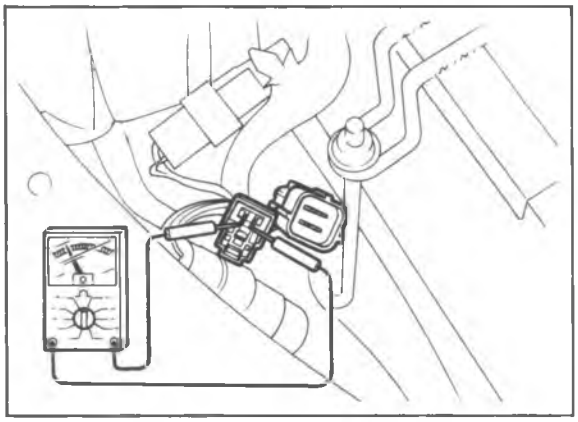

86U07B-054

INHIBITOR SWITCH

Inspection

1. Check that the starter turns with the ignition switch at START position and the selector in the "P" and "N" ranges, and dose not operate in other positions.
2. Check that the back-up (reverse) light illuminates when shifted to the "R" range with the ignition switch in the ON position.
3. Check the inhibitor switch if it is not working properly.

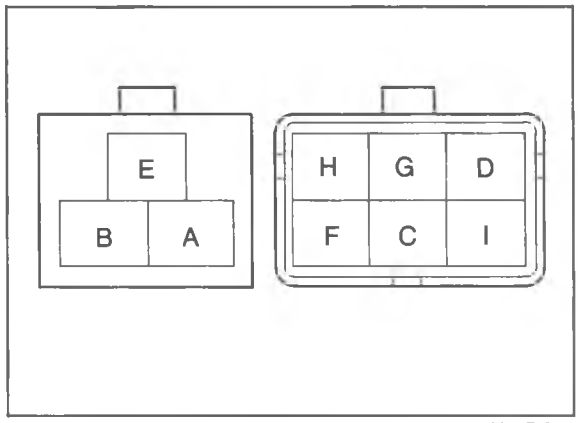

86U07B-055

Inspection of continuity

1. Disconnect the inhibitor switch connector.
2. Check continuity of the terminals.

Position	Connector terminal								
	A	B	C	D	E	F	G	H	I
P	○	○	○	○					
R			○		○				
N	○	○	○			○			
D			○				○		
S			○					○	
L			○						○

○—○: Indicates continuity

3. If not correct, replace switch and perform adjustment of inhibitor switch.

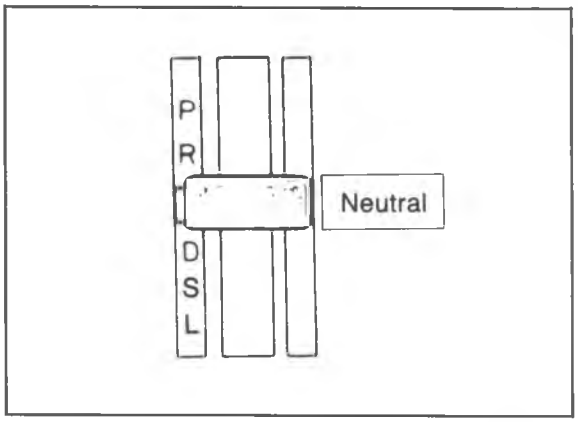

86U07B-479

Adjustment

1. Shift the selector lever to N range.
2. Loosen the inhibitor switch mounting bolts.
3. Remove the screw and move the inhibitor switch so that the small hole is aligned with the screw hole.
4. Set the alignment by inserting a **2.0 mm (0.079 in)** diameter pin through the holes.

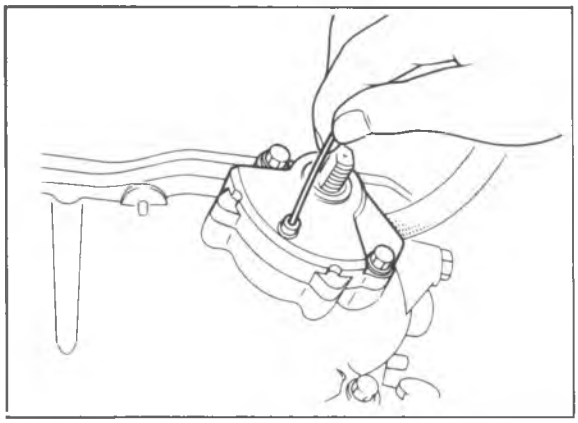
86U07B-480

5. Loosely tighten the switch mounting bolts, remove the pin, and replace the screw.
6. Tighten the switch mounting bolts to specification.

   Tightening torque:
   8—11 N·m (80—110 cm-kg, 69—95 in-lb)

7. Recheck the continuity of the individual terminals.

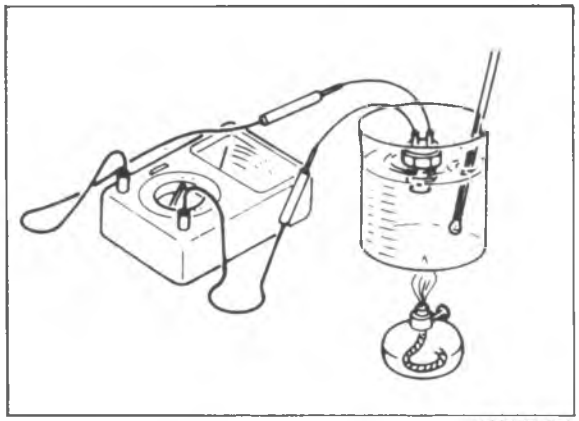
86U07B-481

WATER TEMPERATURE SWITCH

Inspection

1. Remove the water temperature switch.
2. Place the switch in water with a thermometer and heat up the water gradually.
3. Check the continuity of the terminals. If necessary replace the switch.

Connection guide

Water temperature	Continuity
Below 65°C (149°F)	Yes
Above 72°C (162°F)	No

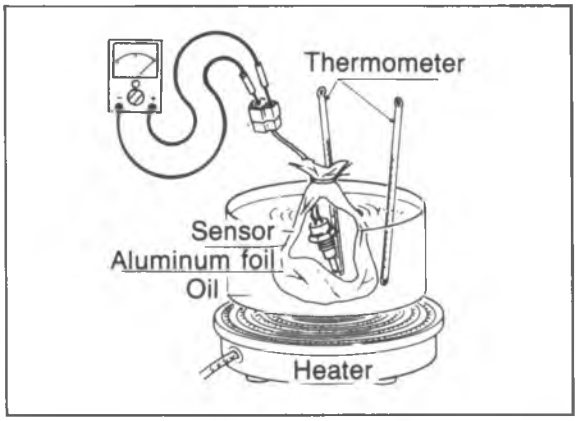

76U07B-061

FLUID TEMPERATURE SWITCH

Inspection

1. Remove the fluid temperature switch.
2. Place the switch in oil with a thermometer as shown and heat it up gradually.
3. Check the continuity of the terminals. If necessary replace the switch.

Connection guide

Fluid temperature	Continuity
Above 150°C (302°F)	Yes
Below 143°C (289°F)	No

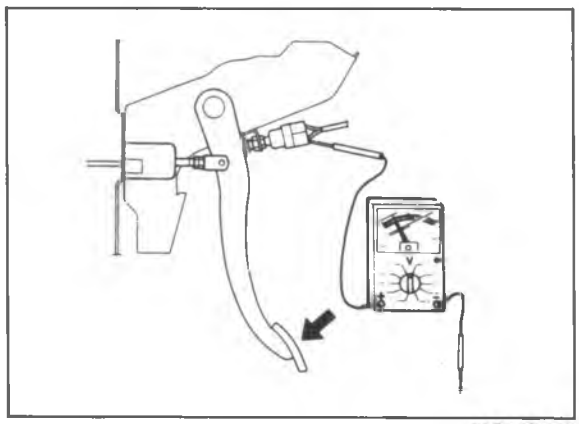

79G07C-113

BRAKE LIGHT SWITCH

Inspection of Terminal Voltage

1. Turn the ignition switch ON.
2. Check the voltage between terminal (WG) and ground while depressing the brake pedal.

Terminal voltage	Brake pedal
Approx. 12V	Depressed
Below 1.5V	Released

3. If not correct, check continuity of the switch.

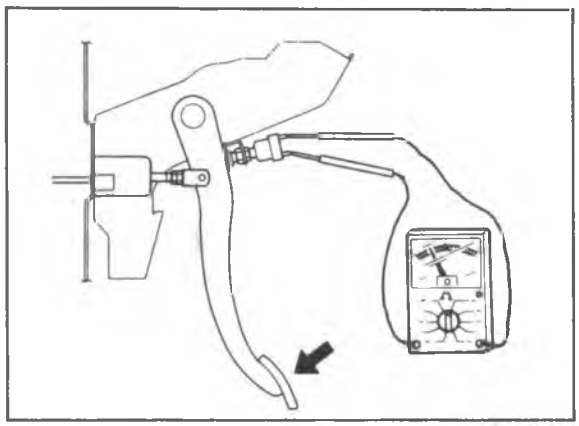

79G07C-114

Inspection of Continuity

1. Disconnect the brake light switch connector.
2. Check for continuity between the terminals while depressing the brake pedal.

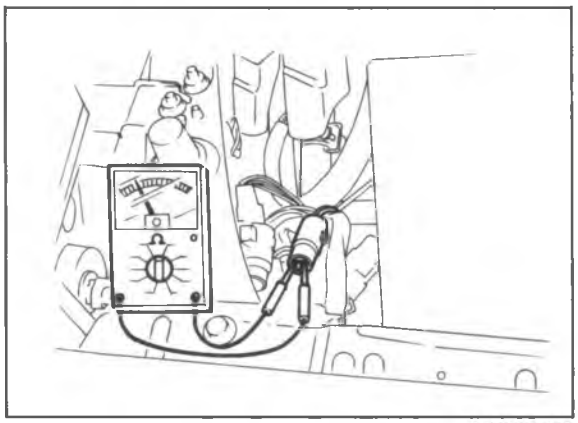

86U07B-056

PULSE GENERATOR

Inspection

1. Disconnect the pulse generator connector.
2. Check for continuity between the terminals, if necessary replace the pulse generator.

Resistance: 200—400Ω

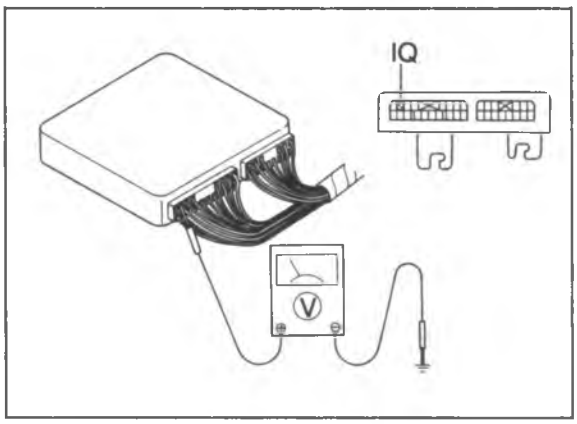

86U07B-057

SPEED SENSOR

Inspection of voltage

1. Connect a voltmeter between the 1Q terminal of the EC-AT control unit and ground as shown.
2. Turn the ignition switch ON.

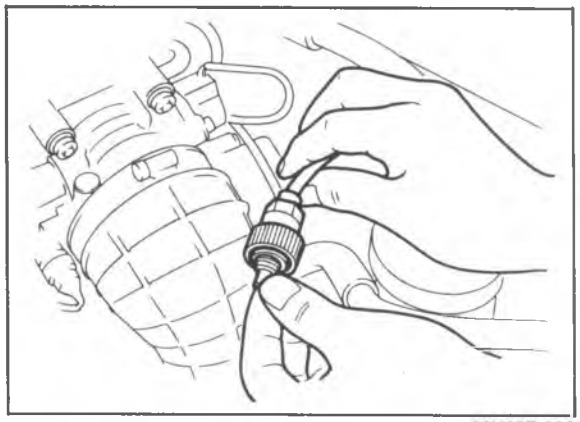

86U07B-058

3. Remove the speedometer cable from the transaxle.
4. Slowly turn the speedometer cable one turn.
5. Check that approx. 4.5V is shown 4 times.
6. If not correct, check the combination meter.

CRUISE CONTROL SWITCH (CRUISE CONTROL UNIT)
Refer to Section 15.

IDLE SWITCH AND THROTTLE SENSOR
Refer to Section 4A.

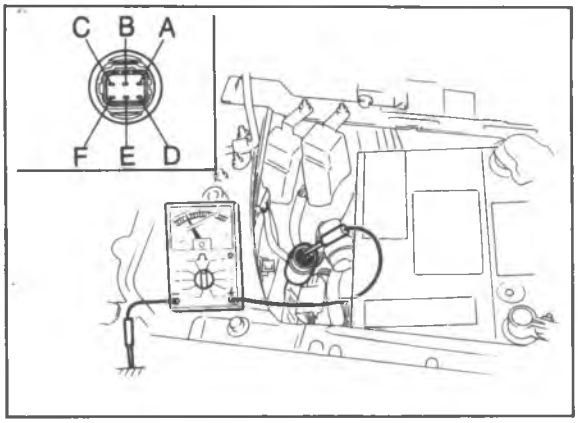

86U07B-059

SOLENOID VALVES
Inspection of Resistance
1. Disconnect the negative battery cable.
2. Disconnect the solenoid valve connector.
3. Measure the resistance of the terminals except (A) terminal, if necessary replace the solenoid valve.

Resistance: 13—27Ω

Note
1-2 solenoid valve : F
2-3 solenoid valve : C,E
3-4 solenoid valve : B
Lock-up solenoid valve : D

NO LOAD SIGNAL
Refer to STEP 3 in Troubleshooting.

MODE, AND HOLD INDICATOR LIGHT
Refer to Section 15.

EC-AT CONTROL UNIT

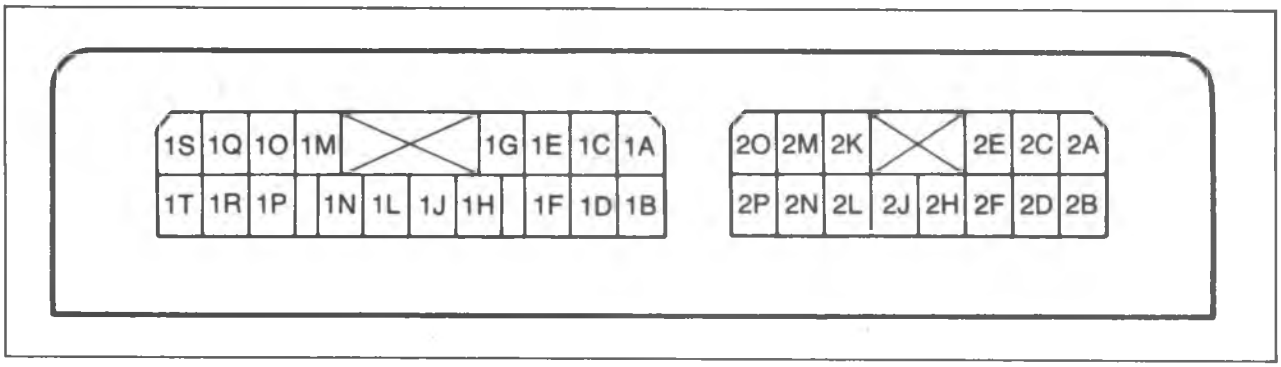

Terminal Voltage Chart

Terminal	Connected to		Voltage	Condition
1A (Input)	Hold switch		Approx. 12V	Switch depressed
			Below 1.5V	Switch released
1B (Input)	Mode switch (Power side)		Below 1.5V	POWER mode
			Approx. 12V	ECONOMY mode
1C (Input)	Inhibitor switch	L range	Approx. 12V	L range
			Below 1.5V	Other ranges
1D (Input)		S range	Approx. 12V	S range
			Below 1.5V	Other ranges
1E (Input)		D range	Approx. 12V	D range
			Below 1.5V	Other ranges
1F (Input)		N and P range	Below 1.5V	N or P range
			Approx. 12V	Other ranges
1G (Input)	Water temperature switch		Approx. 12V	Above 72°C (162°F)
			Below 1.5V	Below 65°C (149°F)
1H	—		—	—
1I	—		—	—
1J	—		—	—
1K	—		—	—
1L (Input)	Idle switch		Below 1.5V	At idle
			Approx. 12V	Other speeds
1M	—		—	—
1N (Input)	Brake light switch		Approx. 12V	Brake pedal depressed
			Below 1.5V	Brake pedal released
1O (Input)	Throttle sensor		Approx. 5V	Ignition switch ON
			Below 1.5V	Ignition switch OFF
1P (Input)			Approx. 0.5—4.3V	Throttle valve fully closed to fully open
1Q (Input)	Vehicle speed sensor		Approx. 4.5V	During driving
			Approx. 4.5V or below 1.5V	Vehicle stopped
1R (Ground)	Throttle sensor		Below 1.5V	—
1S (Input)	Pulse generator		Approx. 12V	Engine running
			Below 1.5V	Engine stopped

Terminal	Connected to	Voltage	Condition
1S (Ground)	Pluse generator	Below 1.5V	—
2A (Battery power)	Battery	Approx. 12V	Ignition switch ON
		Below 1.5V	Ignition switch OFF
2B (Ground)	Body ground	Below 1.5V	—
2C (Memory power)	Battery	Approx. 12V	—
2D (Ground)	Body ground	Below 1.5V	—
2E (Output)	1-2 shift solenoid valve	Approx. 12V	Refer to page 7B—24 of solenoid valve operation table
		Below 1.5V	
2F (Output)	2-3 shift solenoid valve	Approx. 12V	
		Below 1.5V	
2G	—	—	—
2H (Output)	3-4 shift solenoid valve	Approx. 12V	Refer to page 7B—24 of solenoid valve operation table
		Below 1.5V	
2I	—	—	—
2J (Output)	Lock-up solenoid valve	Approx. 12V	Lock-up
		Below 1.5V	Other
2K (Output)	Hold indicator	Below 1.5V	Hold mode
		Approx. 12V	Other modes
2L (Output)	Mode indicator	Approx. 12V	Hold mode
		Below 1.5V	Power or economy mode
2M (Output)	EC-AT Tester (malfunction code)	Approx. 12V	Normal
		Below 1.5V	If malfunction present
		Code signal	Self-diagnosis check connector grounded
2N (Output)	EGI control unit (No load signal)	Approx. 12V	Drum speed below 80 rpm
		Below 1.5V	Drum speed above 640 rpm, and N or P range
2O (Input)	Fluid temperature switch	Below 1.5V	Above 150°C (302°F)
		Approx. 10—12V	Below 143°C (289°F)
2P (Input)	EC-AT check connector	Approx. 12V	—

86U07B-061

ON-VEHICLE MAINTENANCE

AUTOMATIC TRANSAXLE FLUID (ATF)

Inspection for Fluid Leaks

Check for fluid leaks; the following figure shows the locations where fluid leakage may possibly occur.

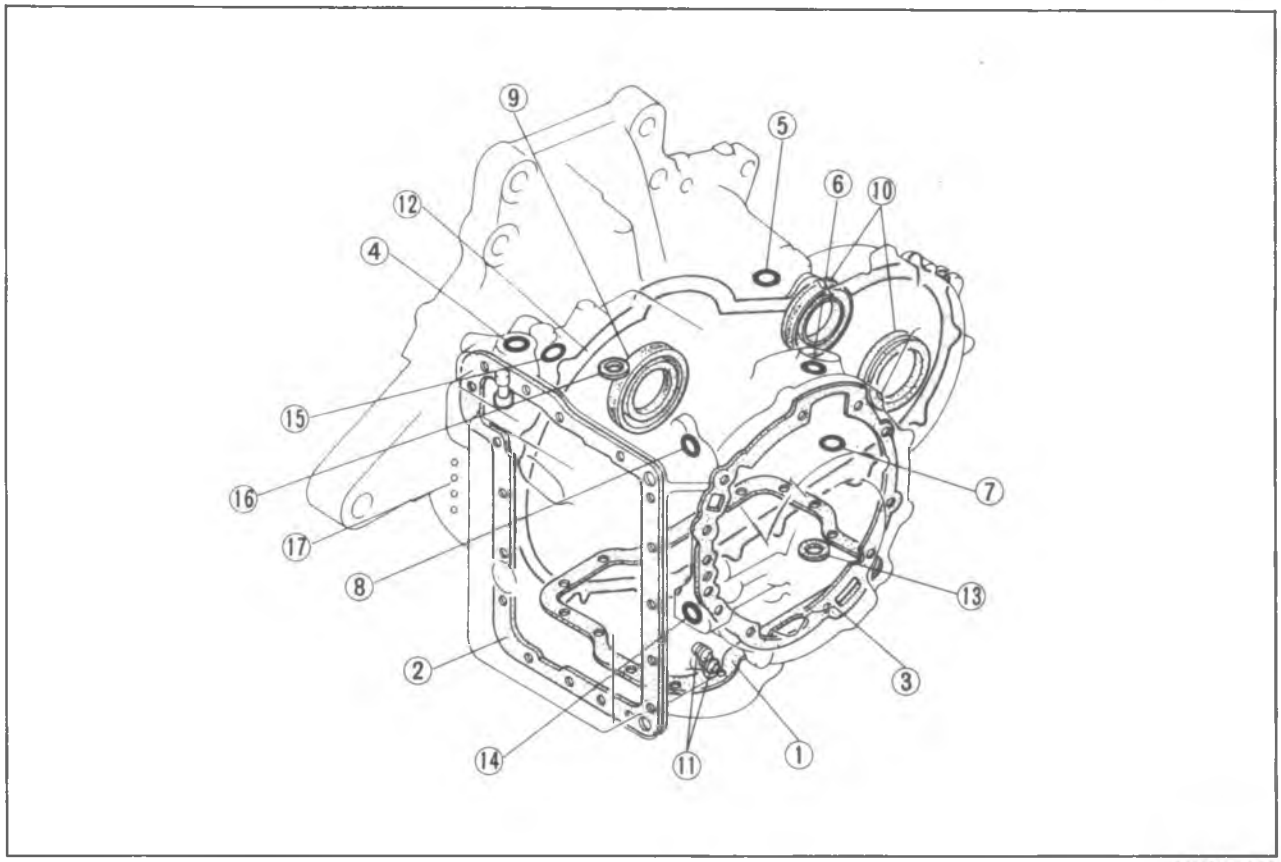

86U07B-062

1. Oil pan
2. Control valve body cover
3. Oil pump
4. Inhibitor switch
5. Speedometer driven gear
6. Pulse generator
7. Oil filler tube
8. Throttle cable
9. Bearing cover
10. Driveshaft
11. Square head plug
12. Transaxle case
13. Drain plug
14. Oil cooler return pipe
15. Oil cooler outlet pipe
16. Fluid temperature switch
17. Blind plugs

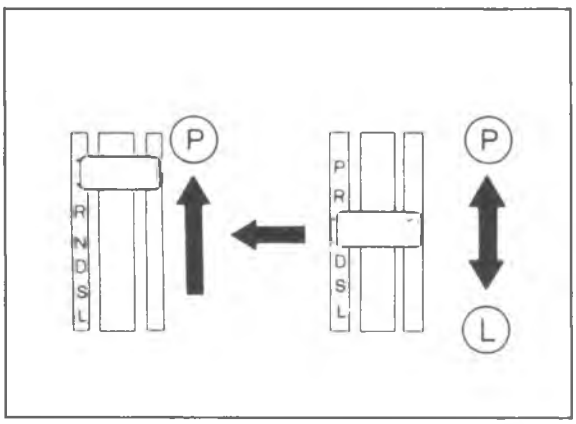

86U07B-063

Inspection of Level

1. Apply the parking brake and position wheel chocks to prevent the car from rolling forward.

   Note
   Place the car on a flat, level surface.

2. Run the engine so that the automatic transaxle fluid reaches specified temperature.
3. While the engine is idling, shift the select lever from "P" to "L" and back again.
4. Let the engine idle.
5. Shift the select lever to "P".

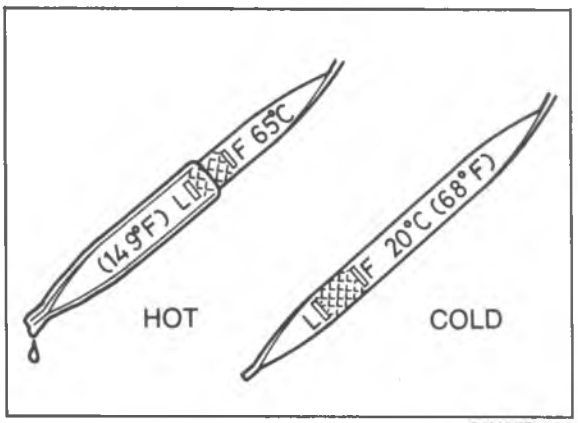

86U07B-064

6. Ensure that the ATF level is between the F and L marks. Add ATF to specification, if necessary.

Low temperature scale:
20°C (68°F)
High temperature scale:
65°C (149°F)
ATF type:
Dexron II or M III

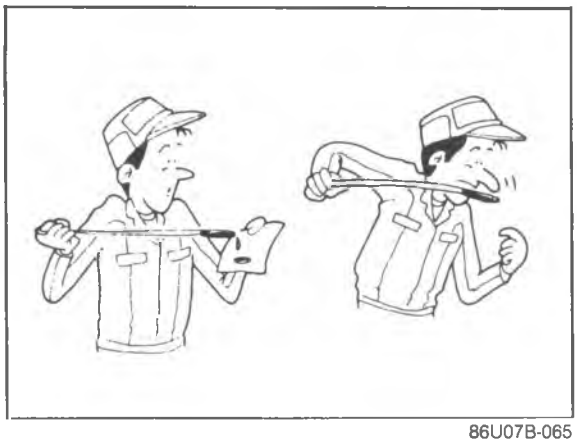

86U07B-065

Inspection of Condition

1. Check the ATF for discoloration.
2. Check the ATF for any unusual smell.

Note
Determine whether or not the automatic transmission should be disassembled by observing the condition of fluid carefully.
If the fluid is muddy and varnished, it indicates burned drive plates.

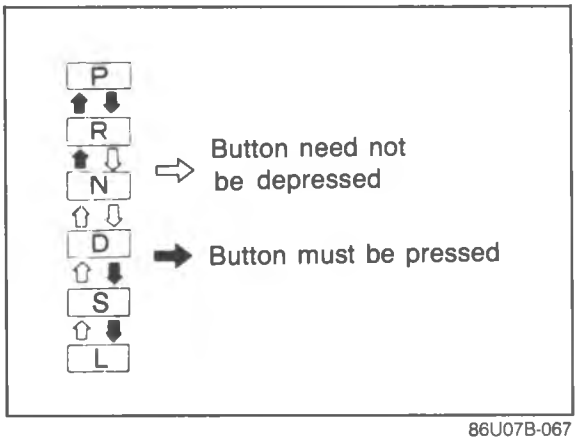

86U07B-067

SELECTOR LEVER

Inspection

1. Check that the selector lever can only be shifted as shown in the figure.
2. Make sure there is a click at each range when shifted from "P" ↔ "L" range.
3. Check that the position of the selector lever and the indicator are exact.
4. Check that the button returns smoothly when used to shift the selector.

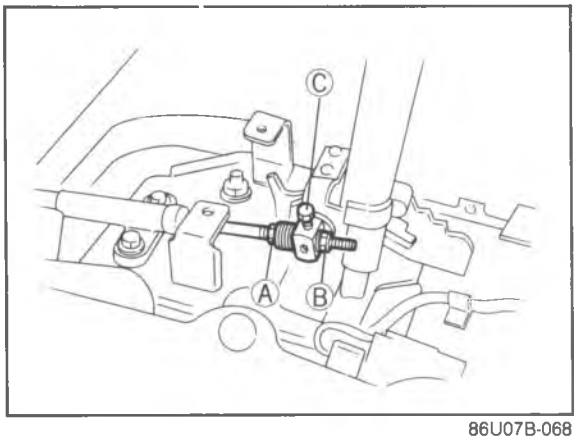

86U07B-068

Adjustment

1. Loosen locknuts A, B, and lockbolt C.
2. Shift the selector lever to "P" range.
3. Shift the transmission to "P" range by moving the manual shaft of the transmission.
4. While holding the selector lever forward in "P" range, tighten lockbolt C to the specified torque.

Tightening torque:
8—11 N·m (80—110 cm-kg, 67—96 in-lb)

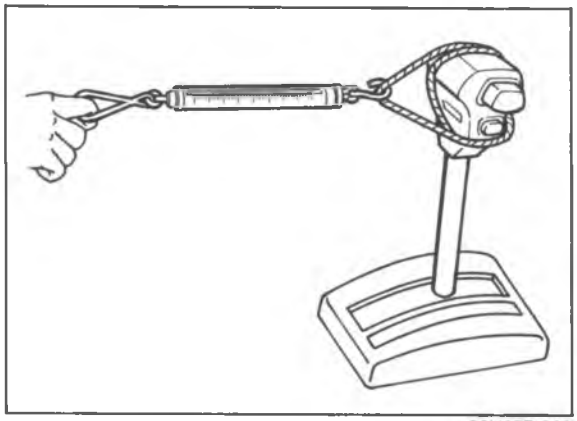

86U07B-069

5. Turn locknut A by hand until it just touches the spacer.
6. Tighten locknut B to the specified torque.

   Tightening torque:
   8—11 N·m (80—110 cm-kg, 67—96 in-lb)

7. Shift the selector lever to "N" range.
8. With the button on the selector lever knob pressed, push the selector toward "R" range with a force of **20 N (2 kg, 4.4 lb)** and check the amount of movement (a) at the selector lever knob.
9. Pull the selector lever toward "D" range in the same manner and check the amount of movement (b).
10. Verify the stroke difference of (a) and (B) is as specified.

    Stroke difference: 8 mm (0.315 in) max.

    Note
    If not within specification, return to step 1.

11. Check the selector lever operation.
    (Refer to Inspection section)

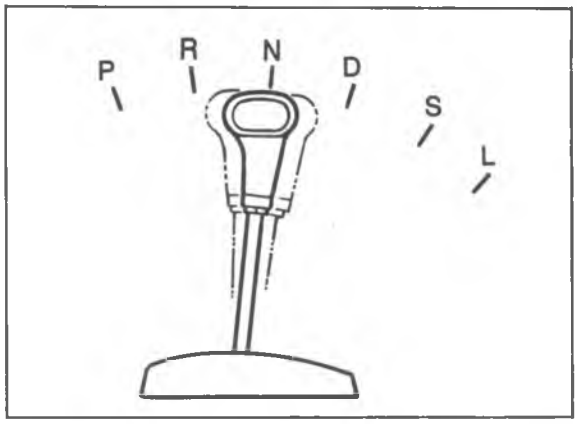

86U07B-070

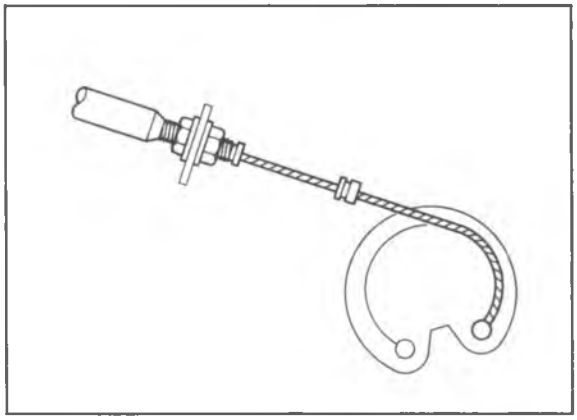

86U07B-066

THROTTLE CABLE

Inspection

1. Check the inner and outer cable for damage.
2. Make sure that the accelerator operates smoothly.

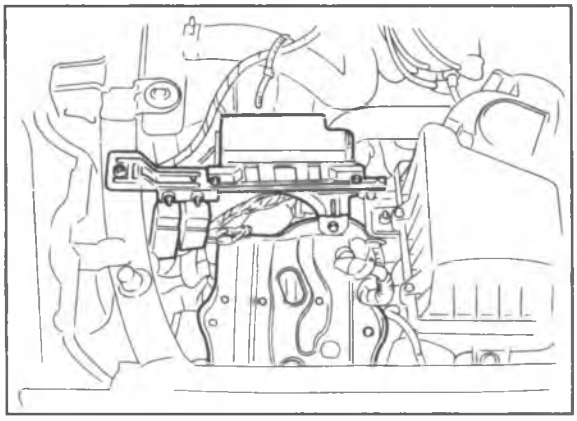

86U07B-071

Removal

1. Remove the battery and battery carrier.
2. Remove the main fuse block.
3. Remove the intercooler hoses.
   (1) Intercooler to air funnel
   (2) Intercooler to intercooler pipe

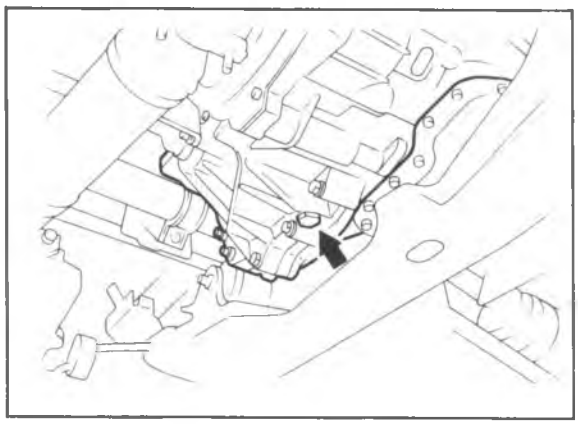

86U07B-073

4. Separate the EC-AT harness from the clip.
5. Jack up the vehicle and support it with safety stands, then drain the ATF.

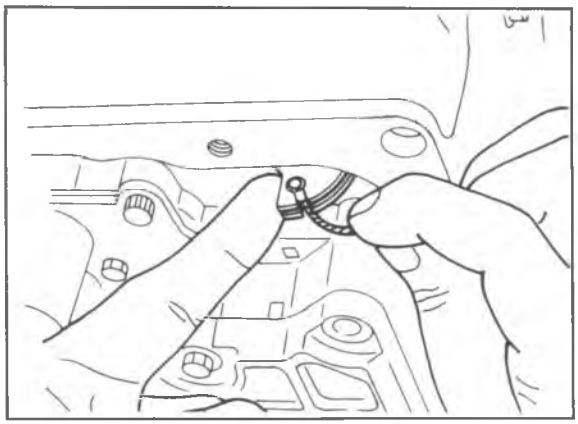

86U07B-074

6. Remove the throttle cable from the throttle cam (throttle chamber).
7. Remove the control valve body cover and gasket.
8. Remove the throttle cable from the throttle cam (control valve body).
9. Remove the mounting bolt and throttle cable from the transaxle.
10. Remove the O-ring.

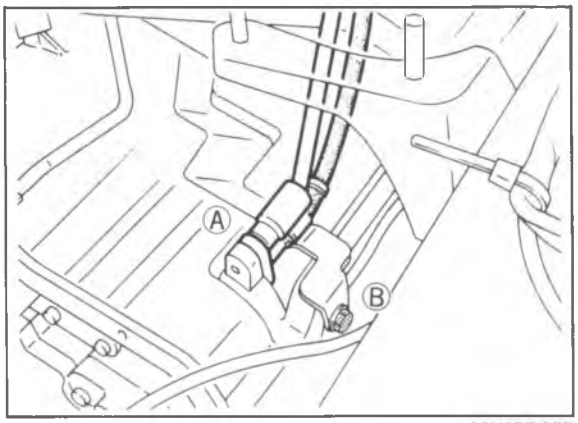

86U07B-075

Installation
Install in the reverse order of removal referring to installation note.

Installation note
Throttle cable
Install the throttle cable and a new O-ring into the transaxle case.

Tightening torque:
Ⓐ 8—11 N·m
(80—110 cm-kg, 69—95 in-lb)
Ⓑ 19—26 N·m
(1.9—2.6 m-kg, 14—19 ft-lb)

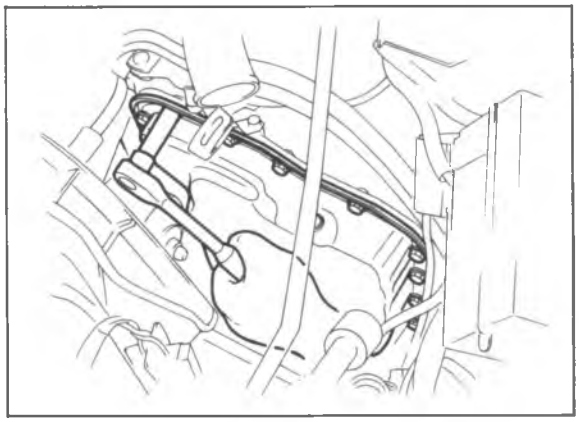

86U07B-076

Control valve body cover
Install the control valve body cover and a new gasket.

Tightening torque:
8—11 N·m (85—110 cm-kg, 74—95 in-lb)

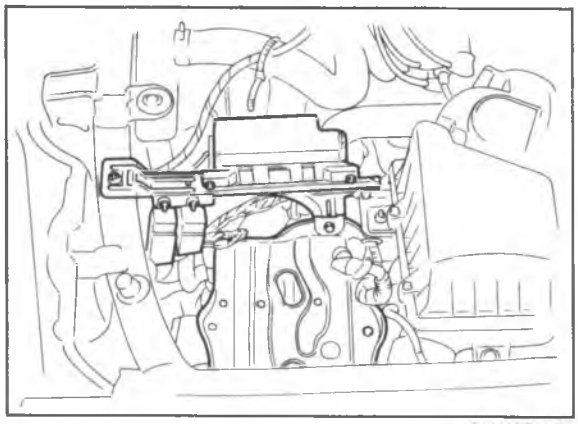

86U07B-077

Main fuse block
Install the main fuse block.

Tightening torque:
8—11 N·m (80—110 cm-kg, 69—95 in-lb)

Battery carrier
Install the battery carrier.

Tightening torque:
31—40 N·m (3.2—4.1 m-kg, 23—30 ft-lb)

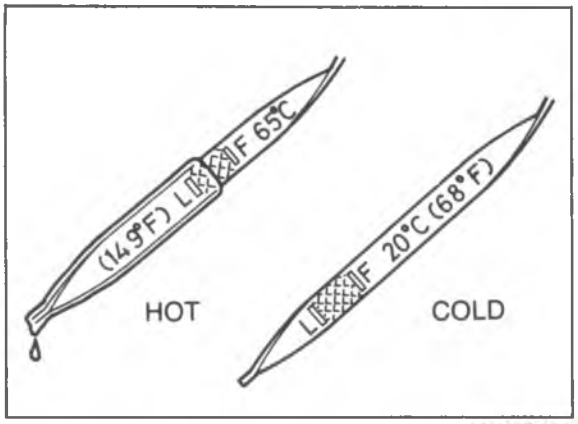

86U07B-078

ATF level
After installation, add ATF, and with the engine idling, check the fluid level and for leaks. (Refer to page 7B—48)

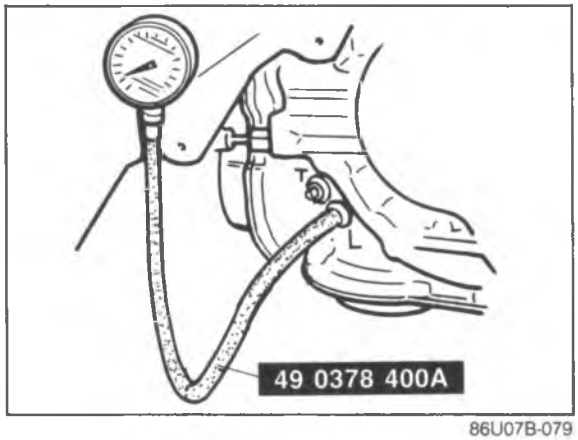

86U07B-079

Adjustment
1. Remove the splash shield next to the left front tire.
2. Remove the square head plug L and install the **SST**.
3. Shift into P range and start the engine. Warm up the engine to normal operating temperature, and adjust the idle speed.

Idle speed:
Non-Turbo 750 $^{+50}_{-0}$ rpm
Turbo 750 ± 25 rpm

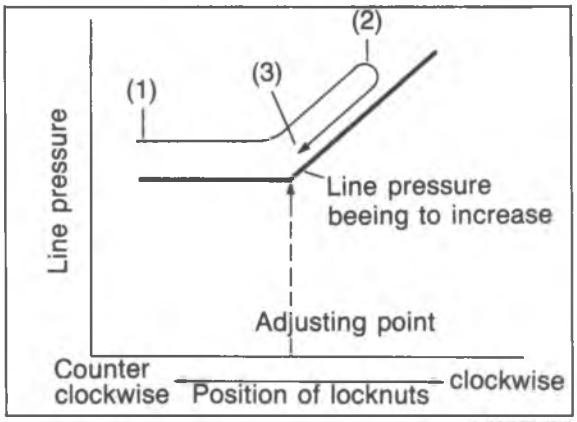

86U07B-482

4. Adjust locknuts as follows:
When the locknuts are moved, line pressure is increased or decreased as shown. Adjust the locknuts to the correct position using the following procedure.

(1) Initially install the locknuts fully away from the throttle cam. (Loosen the cable all the way)
(2) Adjust the locknuts in a clockwise direction as viewed from the front of the vehicle until the line pressure begins to increase above the specification shown below.

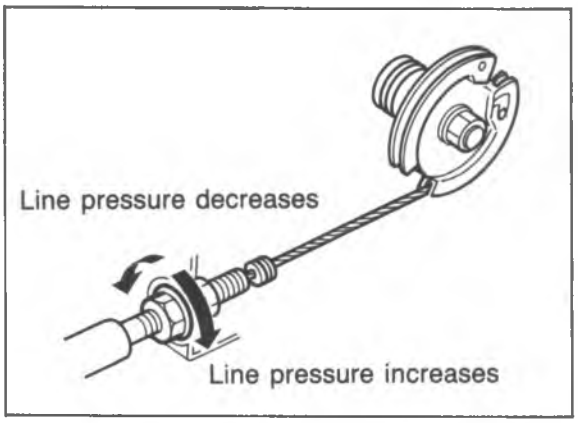

86U07B-483

(3) Adjust the locknuts in a counterclockwise direction until the line pressure decreases to the specification. Tighten the locknuts.

Specified pressure: 432—450 kPa (4.4—4.6 kg/cm^2, 63—66 psi)

Note
Transmission in P range

5. Turn off the engine.

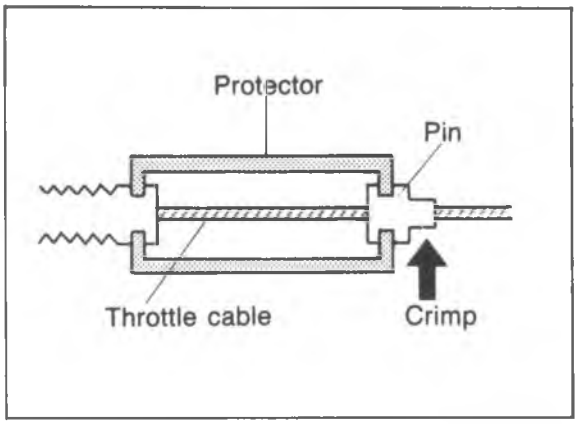

86U07B-080

6. Reinstall the square head plug.

Tightening torque:
5—10 N·m (50—100 cm-kg, 43—87 in-lb)

7. Fully open the throttle valve; then crimp the pin with the protector installed as shown.
8. Remove the protector.

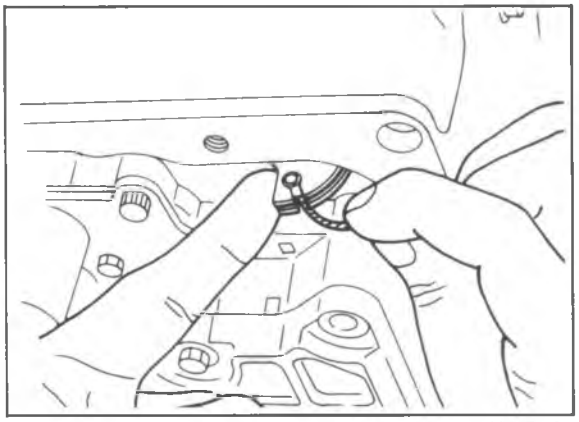

86U07B-081

CONTROL VALVE BODY

Note
Remove the control valve body only if troubleshooting indicates a probable failure.

Removal
1. Remove the throttle cable. (Refer to 7B—50)
2. Disconnect the solenoid connector.

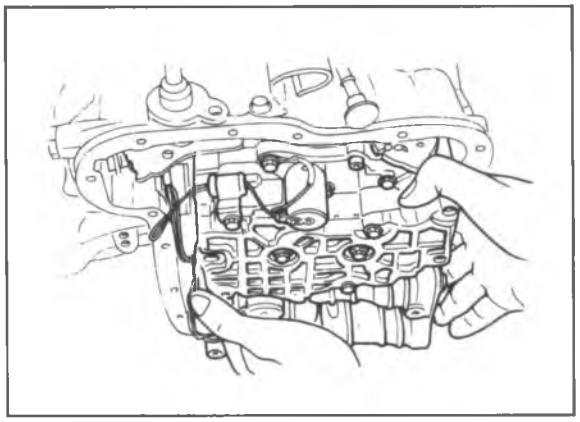

86U07B-082

3. Remove the control valve body.

Disassembly, Inspection and Assembly
Refer to control valve body section of INSPECTION AND REPAIR.

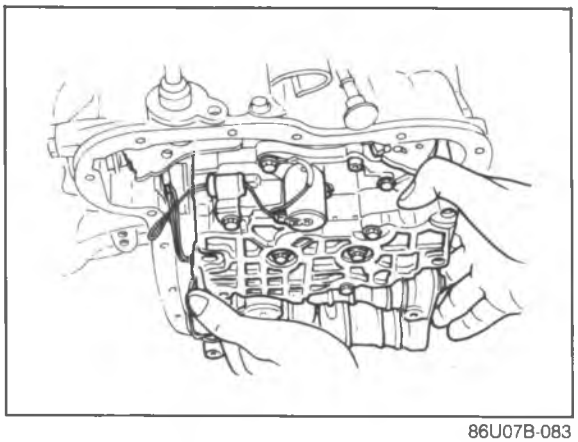

86U07B-083

Installation
Install in the reverse order of removal referring to installation note.

Installation note
Control valve body
Install the control valve body.

Tightening torque:
11—15 N·m (110—150 cm-kg, 95—130 in-lb)

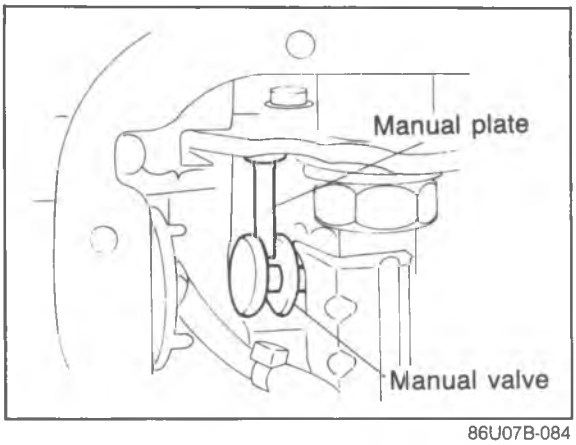

86U07B-084

Note
a) To place the manual plate in the correct position of the manual valve, shift into "R" before installation.
b) Verify that the manual plate and manual valve are assembled correctly by using a mirror, then tighten the mounting bolts.

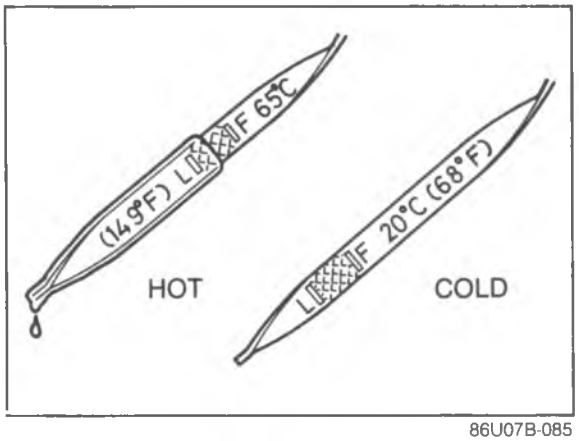

86U07B-085

ATF level
After installation, add ATF, and with the engine idling, check the fluid level and for leaks.
(Refer to page 7B—48)

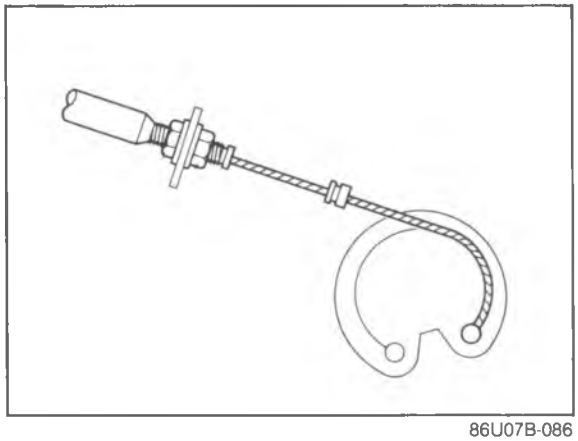

86U07B-086

Throttle cable
Adjust the throttle cable with the oil pressure test.

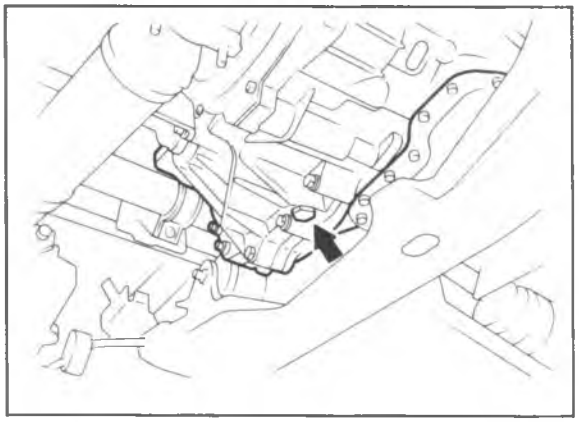

86U07B-087

OIL STRAINER

Removal

1. Jack up the vehicle and support it with safety stands.
2. Drain the ATF.
3. Remove the left side splash shield.

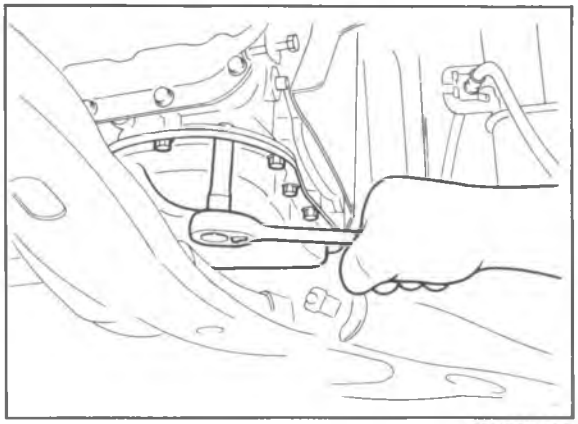

86U07B-088

4. Remove the oil pan and gasket.
5. Remove the oil strainer.
6. Remove the O-ring from the oil strainer.

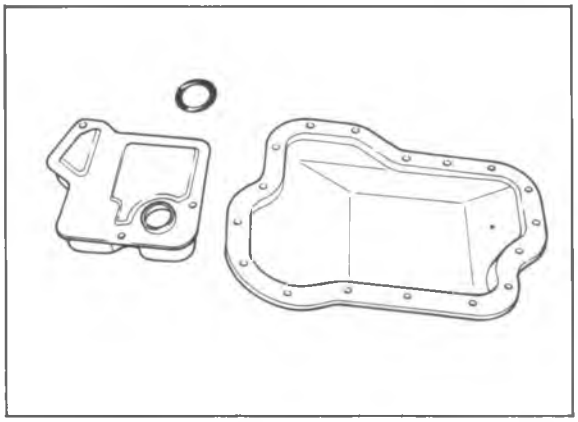

86U07B-089

Inspection

Check the following and repair or replace any faulty parts.

1. Deformed or cracked oil pan
2. Deformed or clogged oil strainer

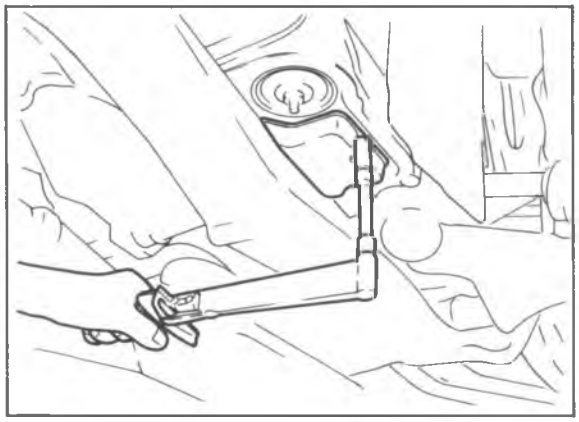

86U07B-090

Installation

1. Apply ATF to the O-ring and install it onto the oil strainer.
2. Install the oil strainer.

Tightening torque:
8—11 N·m (80—110 cm-kg, 69—95 in-lb)

86U07B-091

3. Install the magnets on the oil pan as shown and install the oil pan along with a new gasket.

Tightening torque:
8—11 N·m (80—110 cm-kg, 69—95 in-lb)

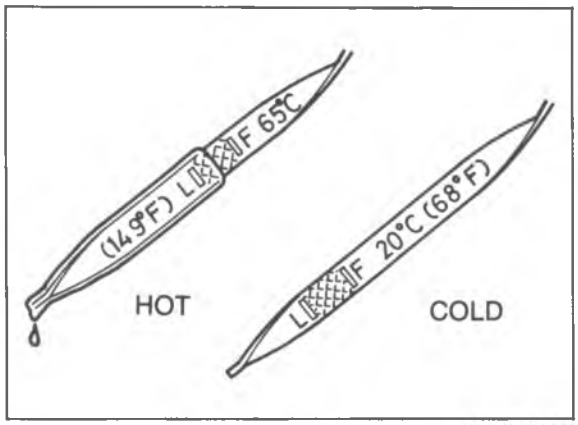

86U07B-092

4. Add ATF, and with the engine idling, check the fluid level and for leaks. (Refer to page 7B—48)

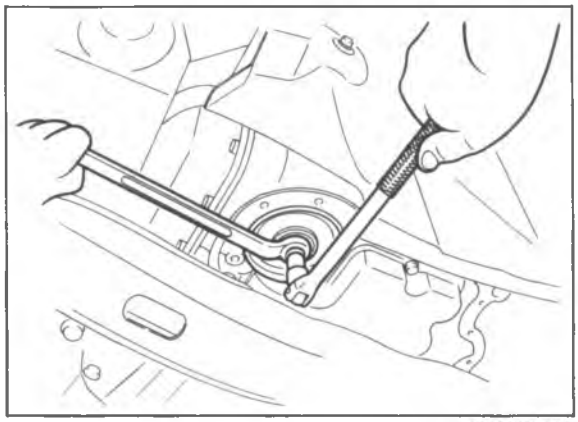

86U07B-093

ADJUSTMENT OF 2-4 BRAKE BAND

1. Remove the oil pan. (Refer to page 7B—55)
2. Adjust the 2-4 brake band. (Refer to page 7B—158)

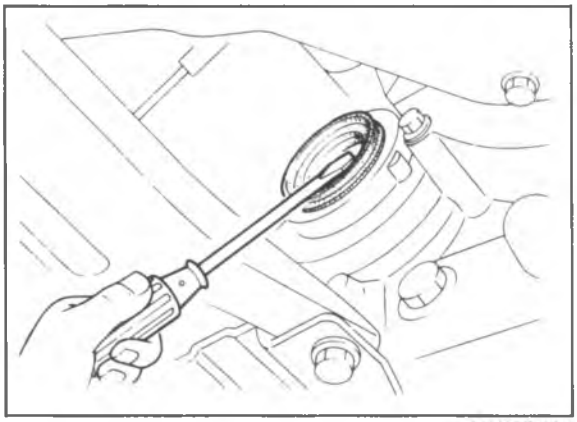

86U07B-094

REPLACEMENT OF DRIVESHAFT OIL SEAL

Replace the oil seal in the same manner as for the manual transaxle. (Refer to page 7A—9)

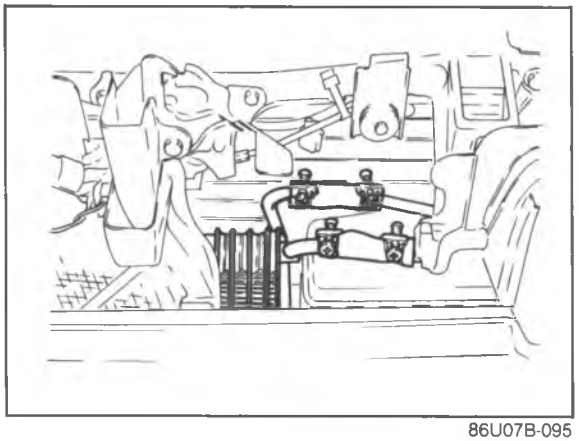

86U07B-095

OIL COOLER

Removal

1. Remove the front grille.
2. Disconnect the oil cooler hoses.

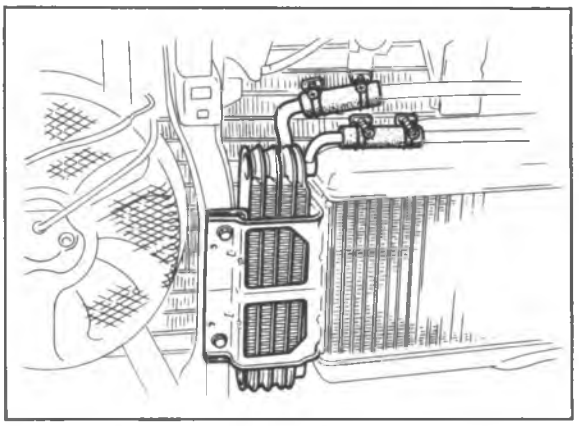

86U07B-096

3. Remove the oil cooler.

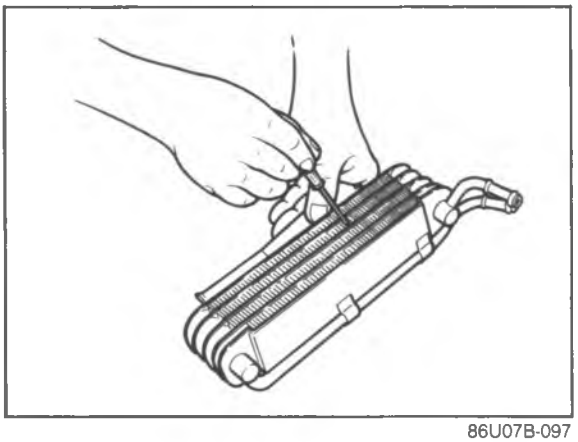

86U07B-097

Inspection

Check the following and repair or replace any faulty parts.

1. Cracks, damage, or oil leakage
2. Bent fins (repair with a screwdriver)

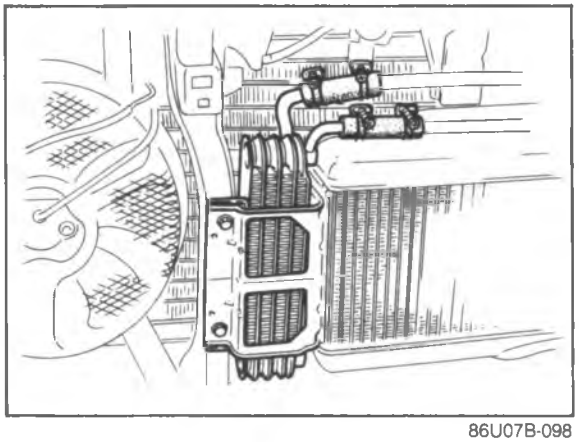

86U07B-098

Installation

Install the oil cooler referring to installation note.

Installation note

Oil cooler

Install the oil cooler.

Tightening torque:
8—11 N·m (80—110 cm-kg, 69—95 in-lb)

REMOVAL

PRECAUTION

(1) Drain the ATF before removal.
(2) Jack up the vehicle and support it with safety stands after attaching the engine support.

Components

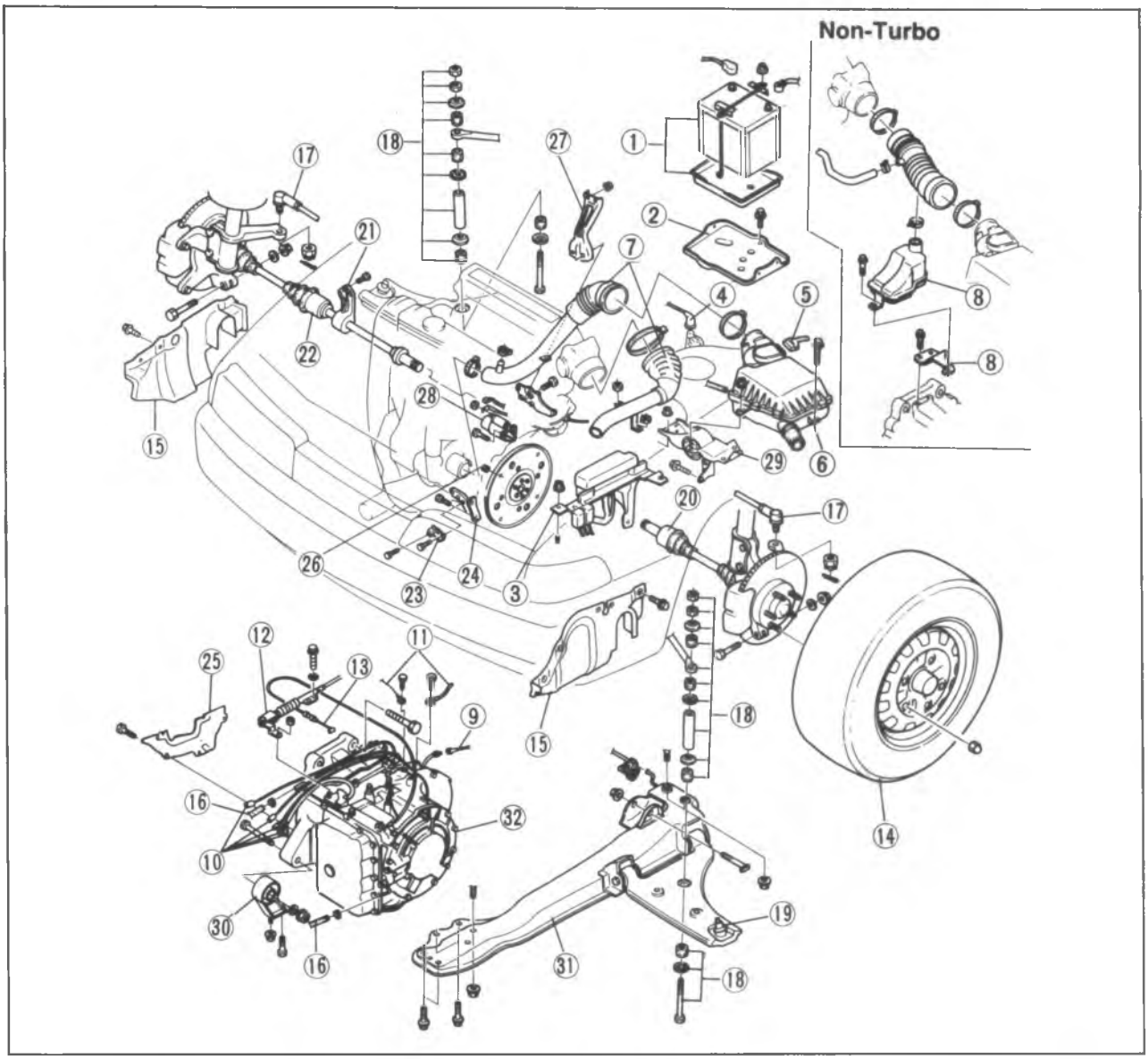

86U07B-099

1. Battery
2. Battery carrier
3. Main fuse block
4. Distributor lead
5. Air flow meter connector
6. Air cleaner assembly
7. Intercooler hoses (Turbo)
8. Resonance chamber and bracket (Non-Turbo)
9. Speedometer cable
10. EC-AT connectors
11. Grounds
12. Selector cable
13. Throttle cable
14. Front wheels
15. Splash shields
16. Oil cooler outlet and inlet hoses
17. Tie-rod ends
18. Stabilizer bar control links
19. Lower arm ball joints
20. Driveshaft
21. Joint shaft bracket
22. Joint shaft and driveshaft
23. Exhaust pipe bracket
24. Gusset plates
25. Under cover
26. Torque converter nuts
27. Manifold bracket
28. Starter
29. Engine mount No.4
30. Engine mount No.2
31. Crossmember and left side lower arm
32. Transaxle

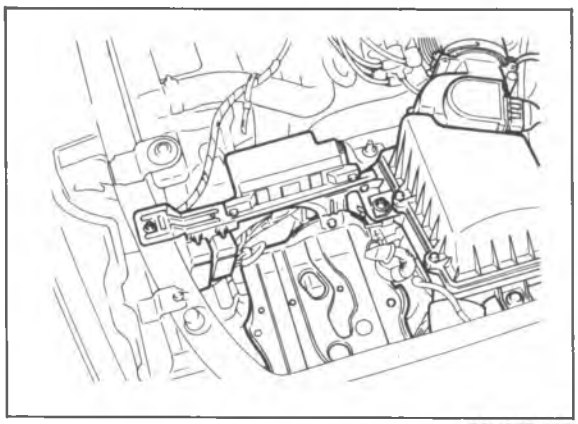

86U07B-100

1. Remove the battery and battery carrier.
2. Disconnect the main fuse block.
3. Disconnect the distributor lead.
4. Disconnect the air flow meter connector and remove the air cleaner assembly.

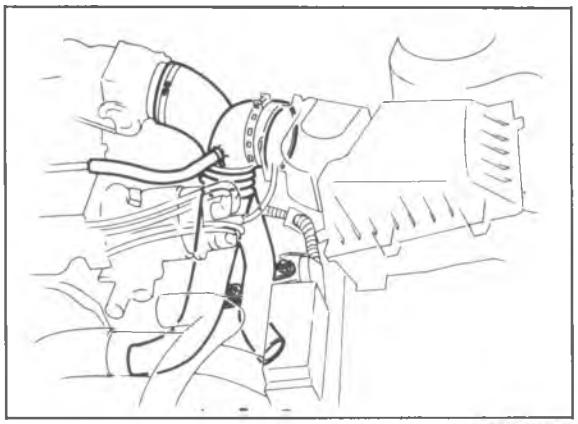

86U07B-101

5. Remove the intercooler hoses as follows (Turbo).
   (1) Intercooler to throttle body
   (2) Air cleaner to turbocharger
6. Remove the air cleaner hose and resonance chamber. (Non-Turbo)
7. Remove the resonance chamber bracket. (Non-Turbo)

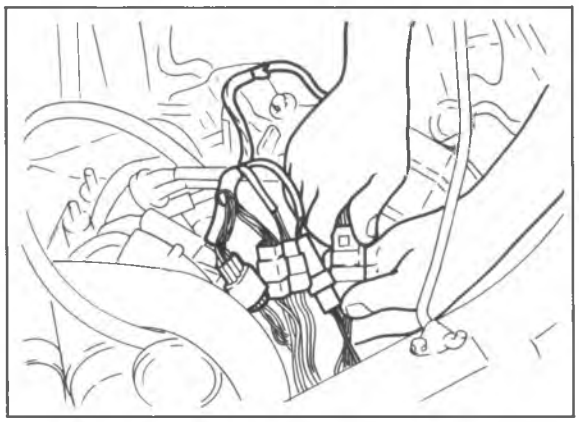

86U07B-102

8. Disconnect the speedometer cable.
9. Disconnect the EC-AT connectors.
   (1) Inhibitor switch
   (2) Solenoid valve
   (3) Pulse generator
   (4) Fluid temperature switch
10. Disconnect the grounds from the transaxle case.

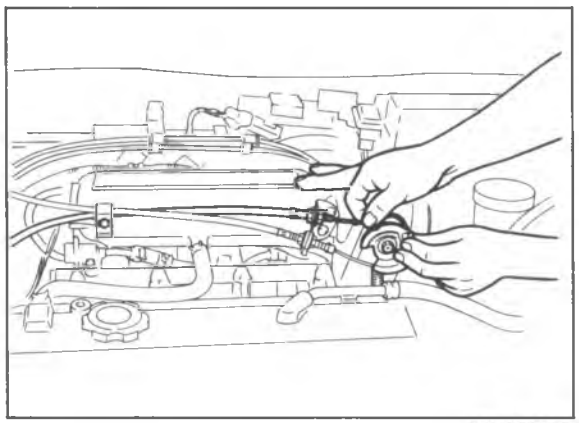

86U07B-103

11. Disconnect the selector cable.
12. Disconnect the throttle cable.

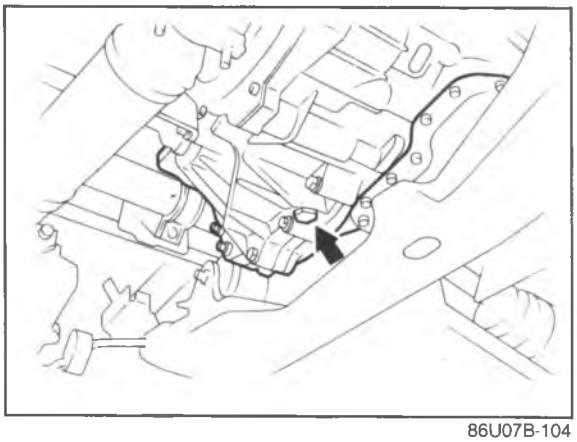

86U07B-104

13. Remove the front wheels.
14. Remove the splash shields.
15. Drain the ATF.
16. Disconnect the oil cooler outlet and inlet hoses.

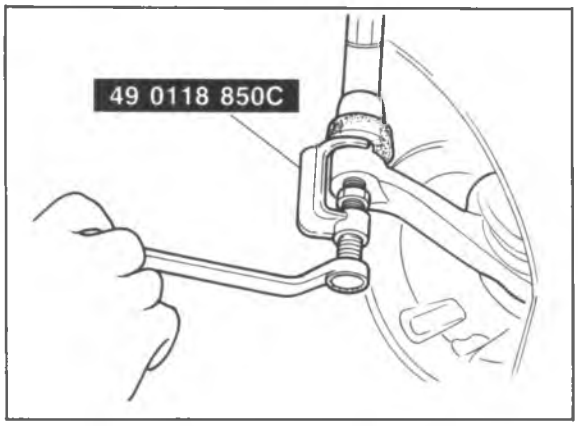

86U07B-105

17. Disconnect the tie-rod ends with the **SST**.

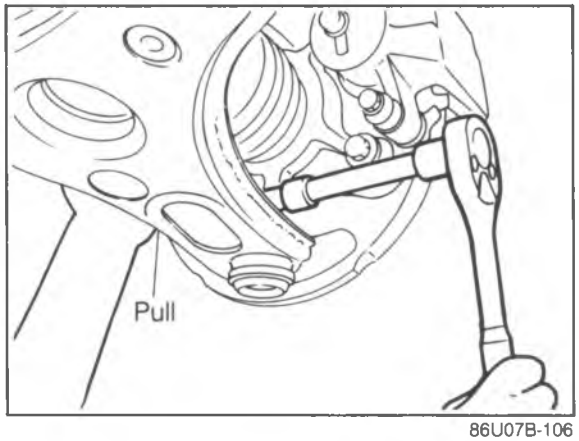

86U07B-106

18. Remove the stabilizer bar control links.
19. Remove the bolts and nuts at the left and right lower arm ball joints.
20. Pull the lower arms downward to separate them from the knuckles.

    Caution
    Do not damage the ball joint dust boots.

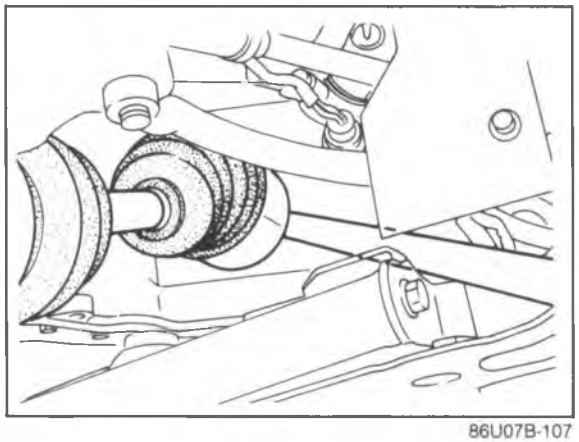

86U07B-107

21. Separate the left driveshaft from the transaxle by prying with a bar inserted between the shaft and the case.

    Caution
    Do not damage the oil seal.

22. Remove the joint shaft bracket.
23. Separate the right driveshaft together with the joint shaft in the same manner.

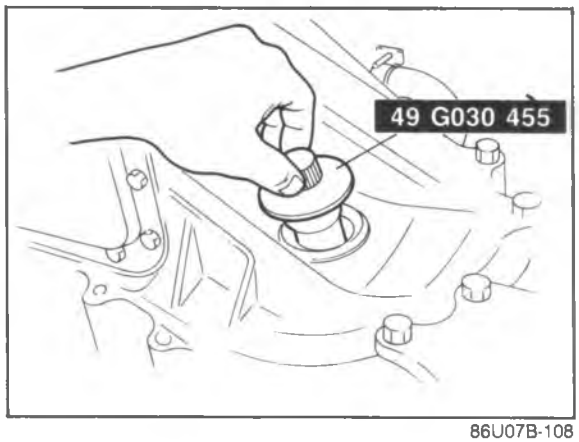

86U07B-108

24. Install the **SST** into the differential side gears.

Caution
Failure to install the SST may allow the differential side gears to become misaligned.

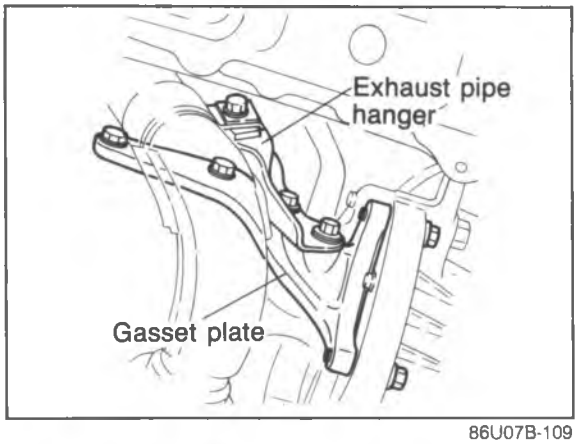

86U07B-109

25. Remove the exhaust pipe hanger and gusset plates.
26. Remove the under cover.
27. Remove the torque converter nuts.

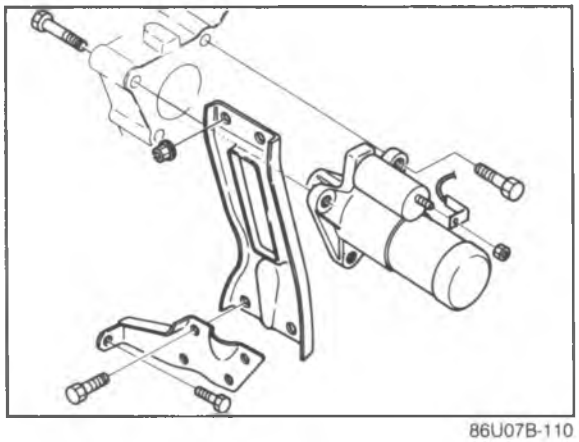

86U07B-110

28. Remove the manifold bracket.
29. Remove the starter.

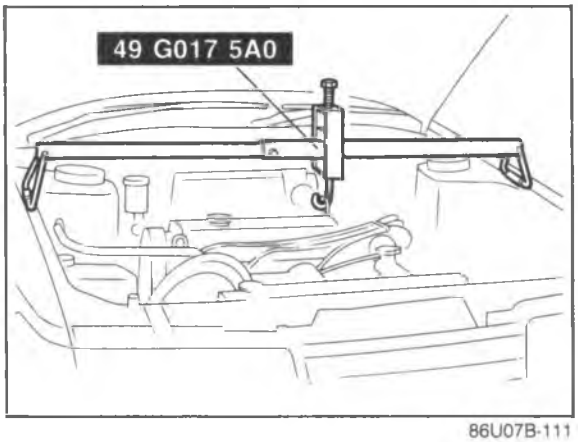

86U07B-111

30. Suspend the engine with the **SST**.

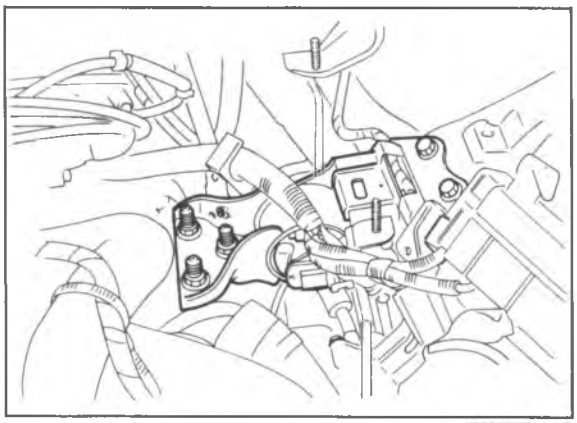

86U07B-112

31. Remove engine mount No. 4 and bracket.

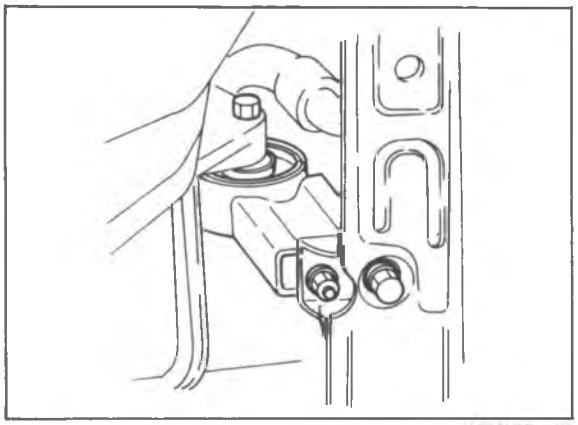

86U07B-113

32. Remove engine mount No. 2.

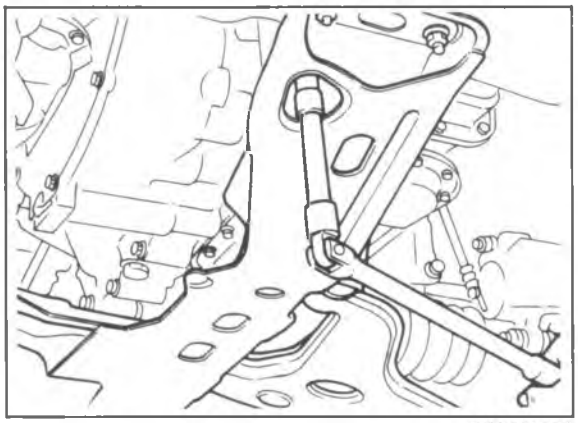

86U07B-114

33. Remove the crossmember and the left side lower arm as an assembly.

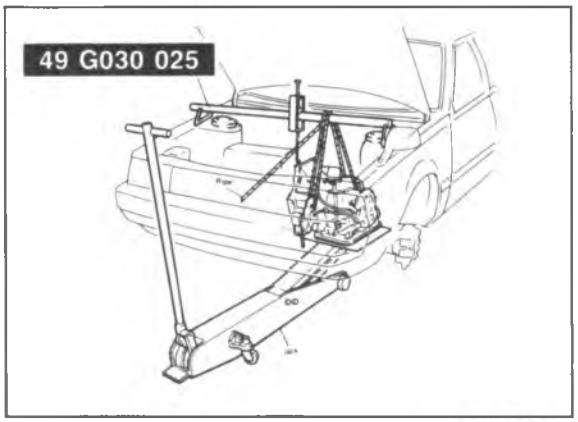

86U07B-115

34. Lean the engine toward the transaxle by loosening the engine support hook bolt.
35. Support the transaxle with a jack.
36. Remove the transaxle mounting bolts.
37. Remove the transaxle.

DISASSEMBLY

DISASSEMBLY-STEP 1
Components

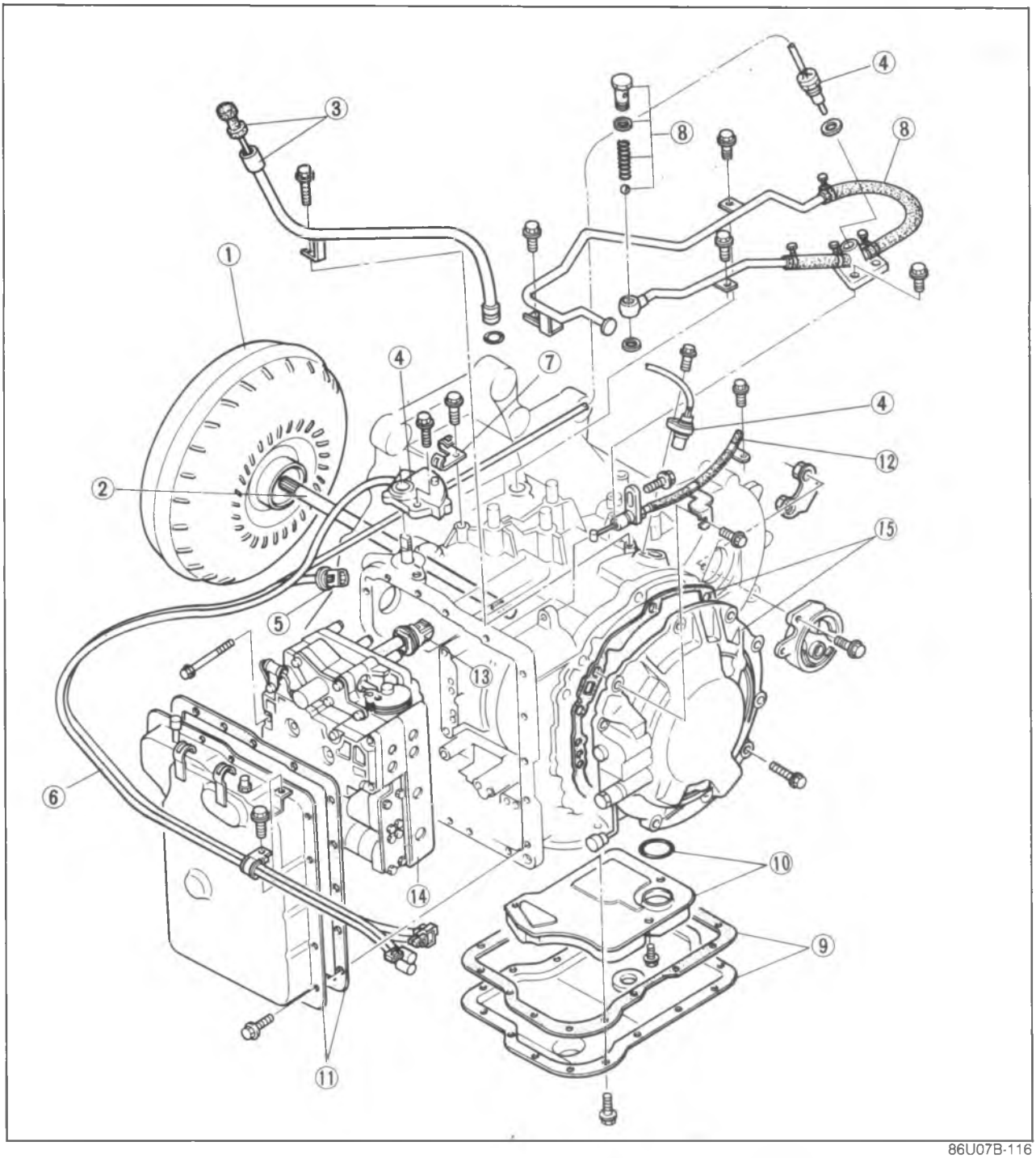

86U07B-116

1. Torque converter
2. Oil pump shaft
3. Oil level gauge and oil filler tube
4. Pulse generator fluid temperature switch, and inhibitor switch
5. Solenoid connector
6. Wire harnesses
7. Harness clip
8. Oil pipes, oil hoses, and switch box
9. Oil pan and gasket
10. Oil strainer and O-ring
11. Control valve body cover and gasket
12. Throttle cable
13. Solenoid connector (Valve body side)
14. Control valve body
15. Oil pump and gasket

Procedure
Precaution

(1) Drain the ATF before removing the transaxle from the vehicle.
(2) Disassemble the transaxle in a clean area (dustproof workspace) to prevent dust entry into the mechanisms.
(3) Clean the transaxle exterior thoroughly with steam and/or cleaning solvents prior to disassembly.
(4) Inspect the individual transaxle components in accordance with the Troubleshooting during disassembly.
(5) Use plastic hammers when applying force to separate the light alloy case joints.
(6) Do not use rags during disassembly.
(7) Neatly arrange the removed parts in order during disassembly.

86U07B-117

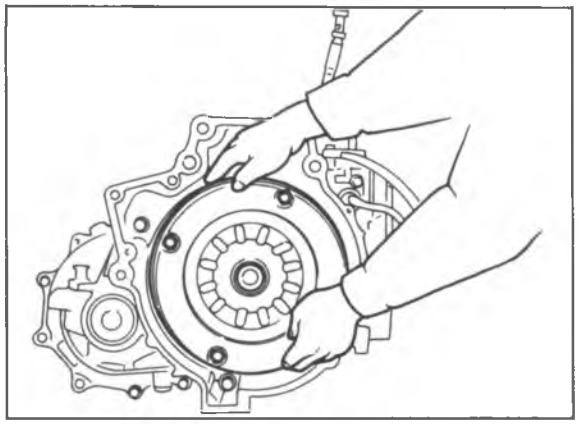

86U07B-118

1. Remove the torque converter from the converter housing.

Note
Do not allow the ATF to spill when removing the torque converter.

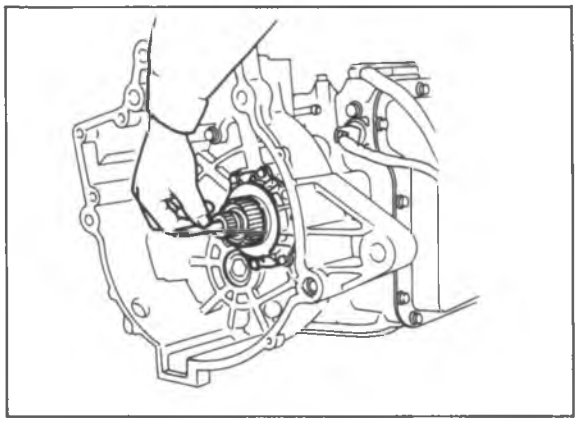

86U07B-119

2. Pull out the oil pump shaft by hand.

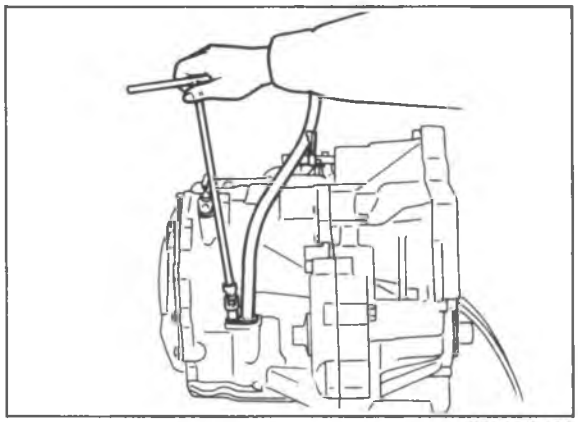

86U07B-120

3. Remove the oil level gauge and oil filler tube.

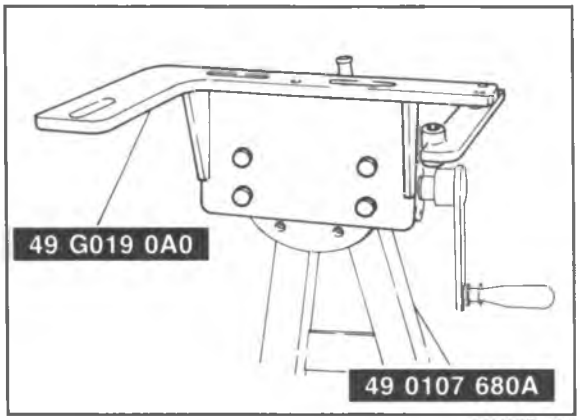

86U07B-121

4. Assemble the **SST**.

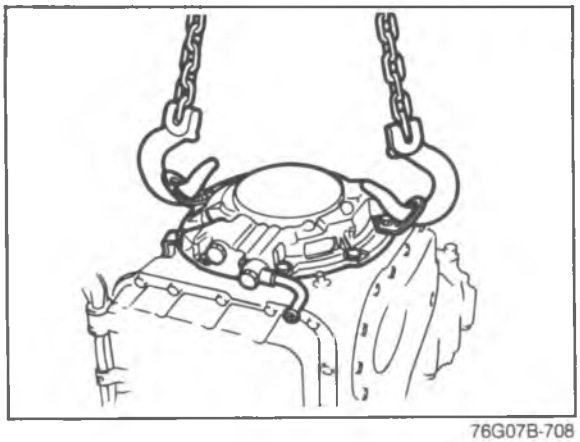
76G07B-708

5. Attach the suitable hanger to the oil pump as shown.

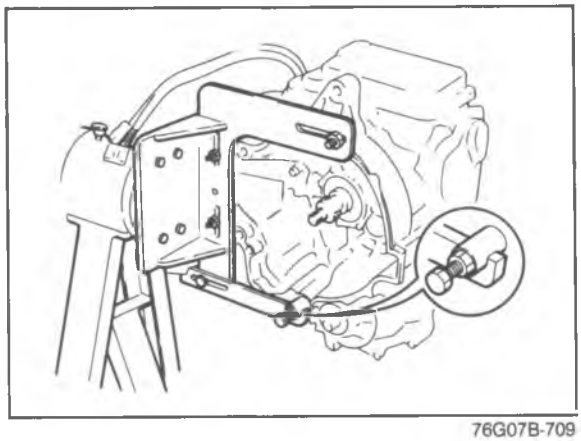
76G07B-709

6. Lift the transaxle and mount it on the **SST**.

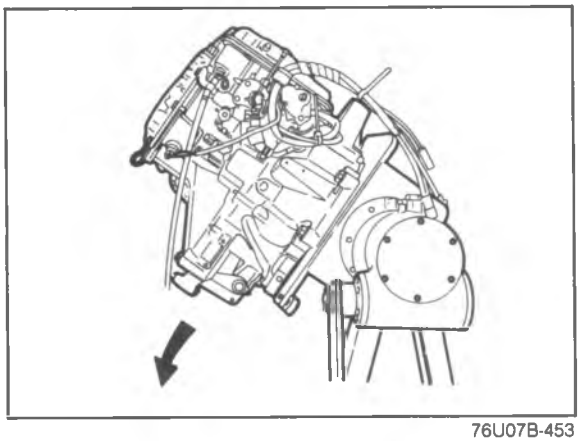
76U07B-453

Warning
Avoid leaning the transaxle to one side during disassembly, it may turn quickly and cause injury.

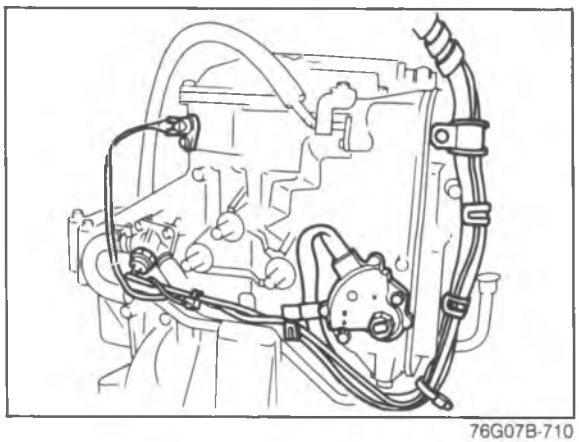

76G07B-710

7. Remove the pulse generator, fluid temperature switch, and inhibitor switch.

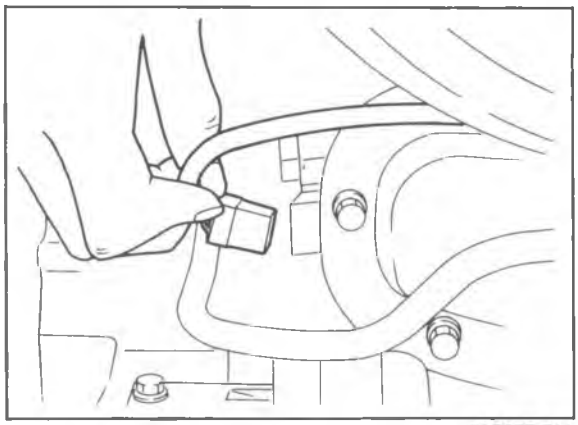

76G07B-711

8. Disconnect the solenoid connector.

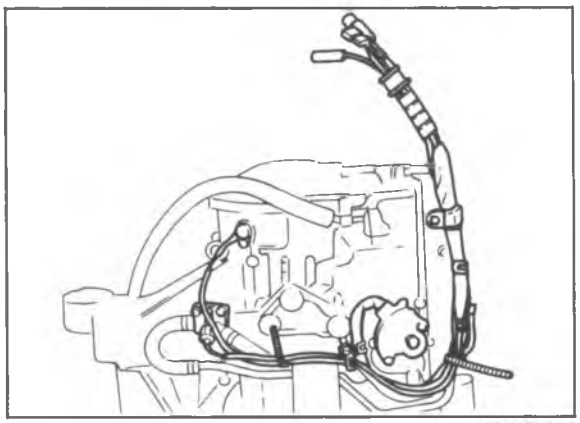

76G07B-712

9. Remove the harnesses.

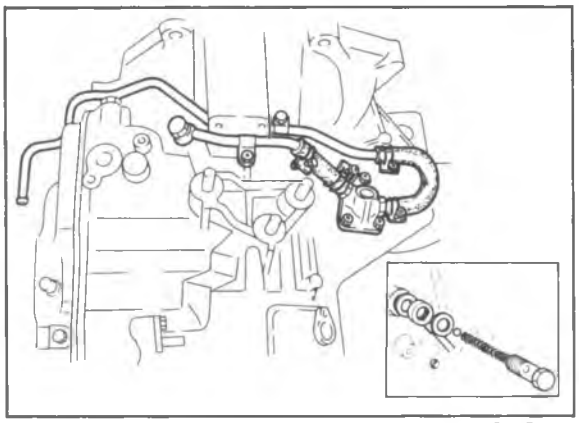

76G07B-713

10. Remove the harness clip, then remove the oil pipes, oil hoses and switch box as an assembly.

Note
Remove the ball from the case.

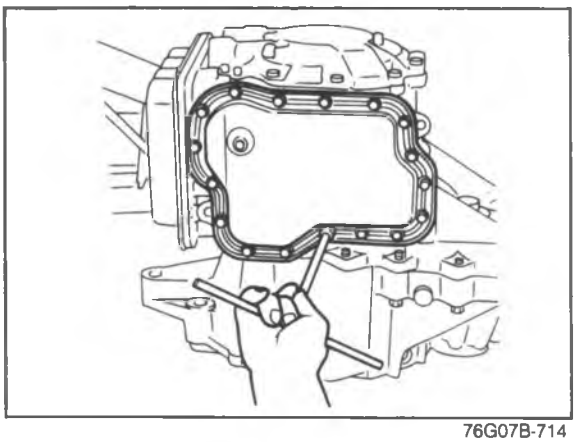

76G07B-714

11. Remove the oil pan and gasket.

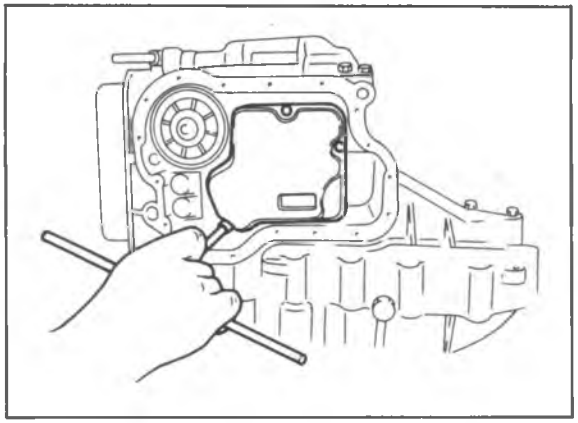

76G07B-715

12. Remove the oil strainer and O-ring.

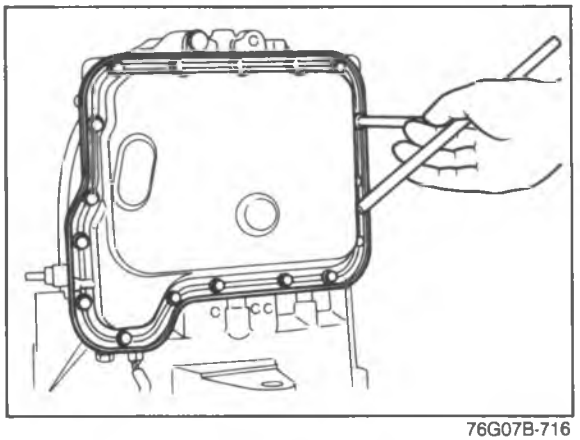

76G07B-716

13. Remove the control valve body cover and gasket.

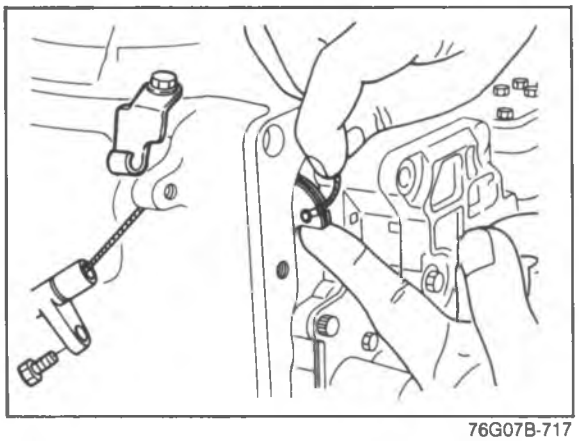

76G07B-717

14. Remove the throttle cable.
    (1) Remove the throttle cable attaching bolt and bracket.
    (2) Remove the cable from the throttle cam of the valve body.

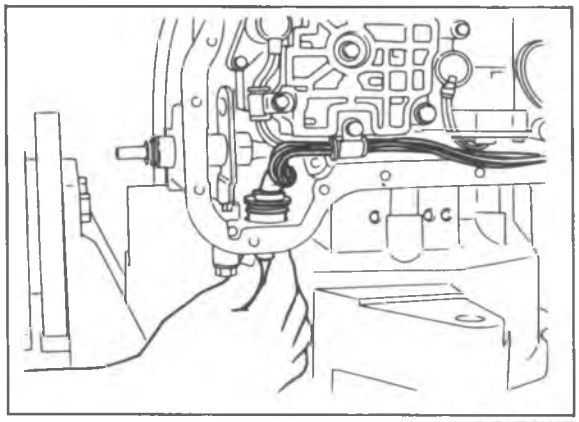

76G07B-718

15. Pinch the tangs of the solenoid connector and remove it by pushing inward.

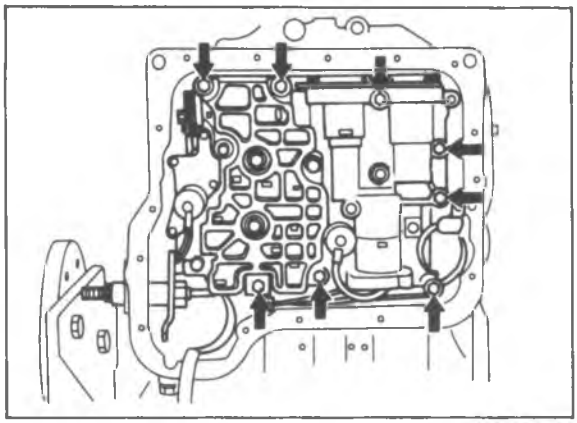

76G07B-719

16. Remove the control valve body as an assembly.

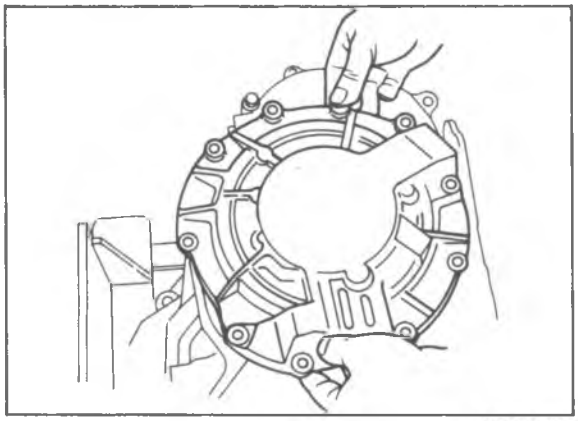

76G07B-720

17. Remove the oil pump as an assembly.

DISASSEMBLY-STEP 2
Components

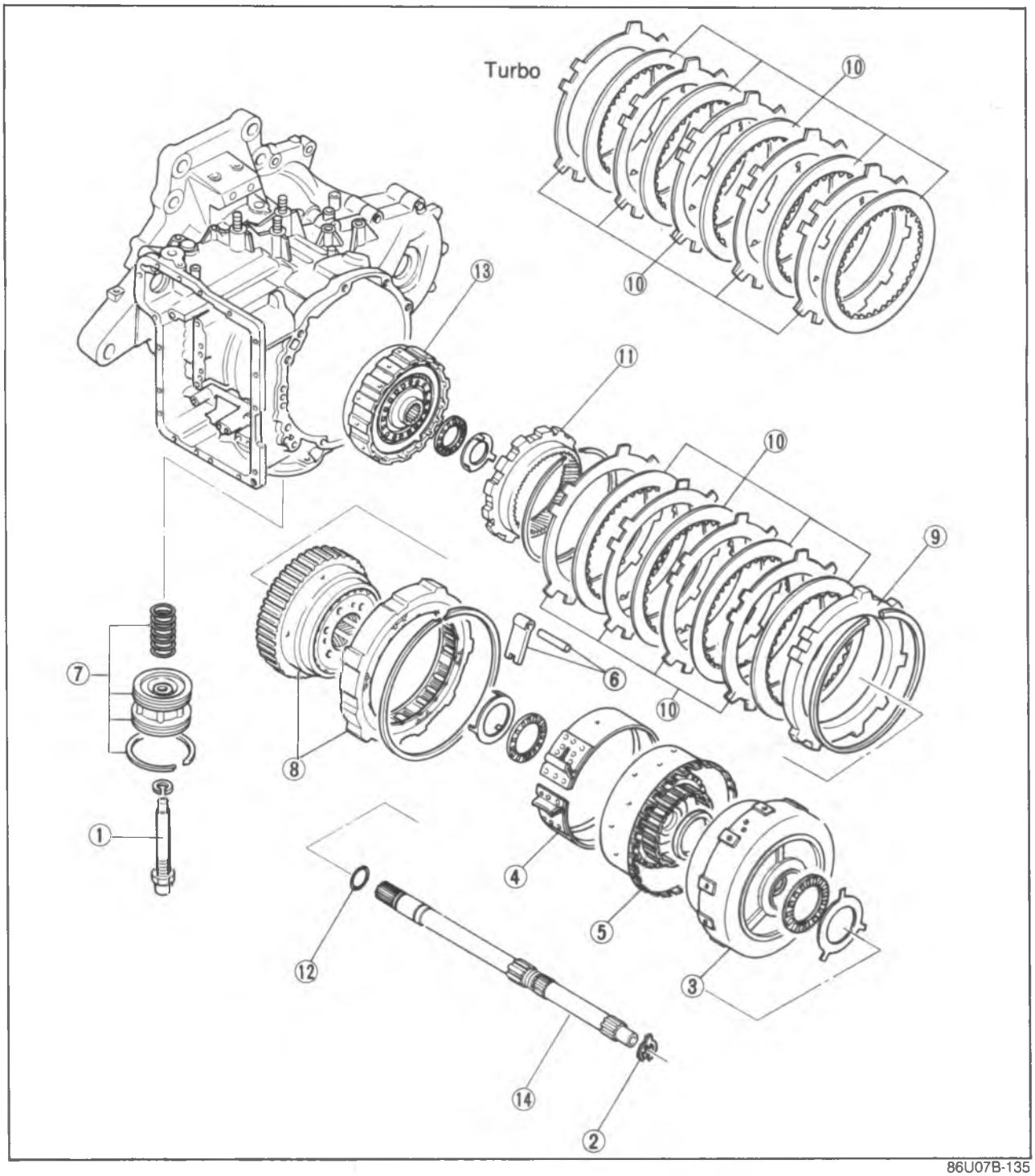

86U07B-135

1. Piston stem
2. Snap ring
3. Clutch assembly
4. 2-4 brake band
5. Small sun gear and one-way clutch
6. Anchor strut and shaft
7. Servo
8. One-way clutch and carrier hub assembly

—Low and reverse brake—

9. Retaining plate
10. Drive and driven plates
11. Internal gear
12. O-ring
13. 3-4 clutch assembly
14. Turbine shaft

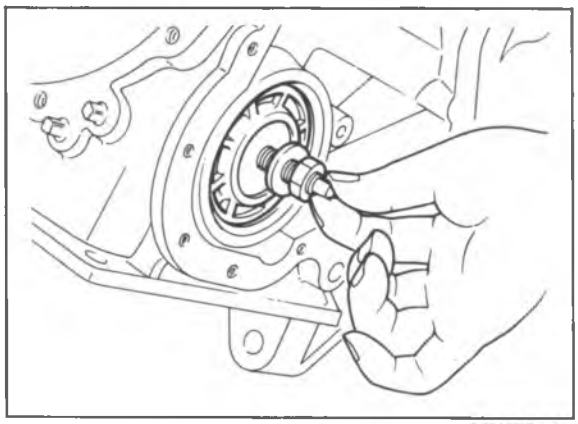

86U07B-136

Procedure

1. Remove the piston stem from the servo.

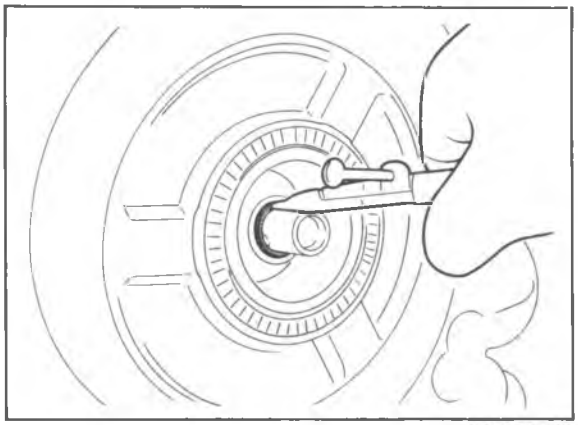

86U07B-137

2. Remove the clutch assembly.
   (1) Remove the turbine shaft snap ring.

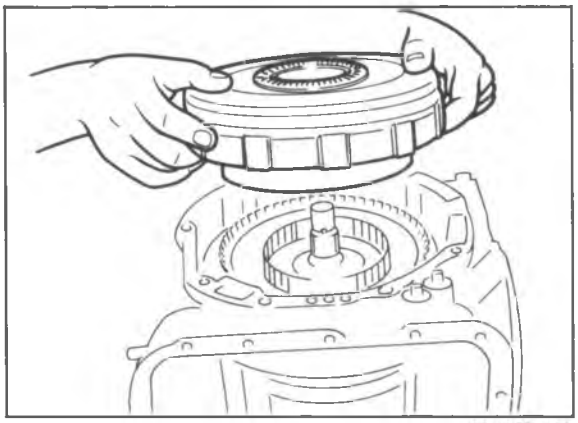

86U07B-138

   (2) Pull the reverse and forward drum and remove the clutch assembly.

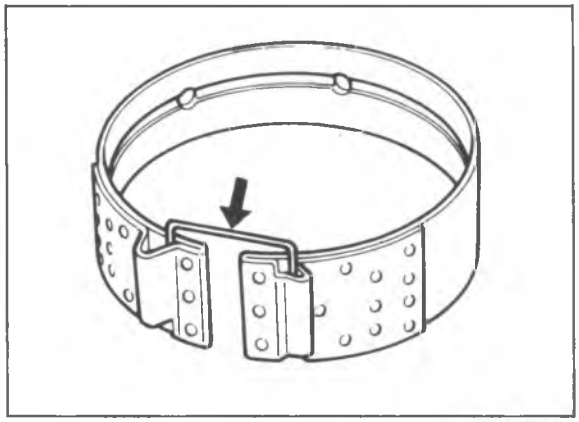

86U07B-139

3. Remove the 2-4 brake band.

Note
Use a piece of wire to secure the brake band so that it is not damaged by being stretched.

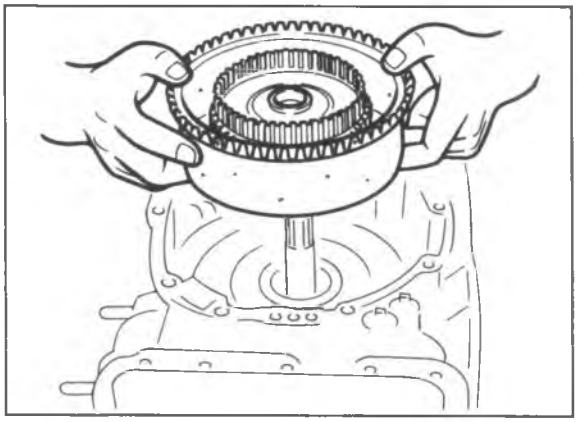

86U07B-140

4. Remove the small sun gear and one-way clutch.

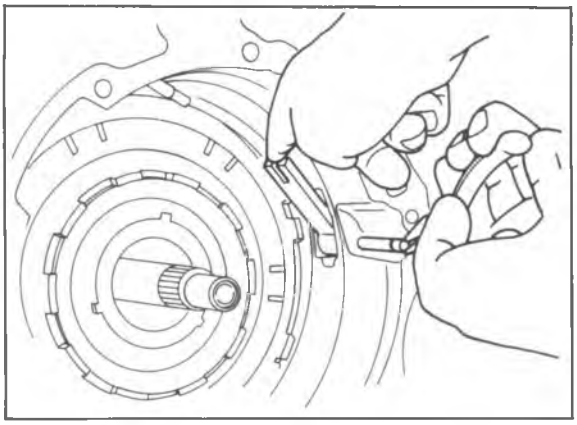

86U07B-141

5. Pull the anchor shaft while holding the strut, then remove the strut.

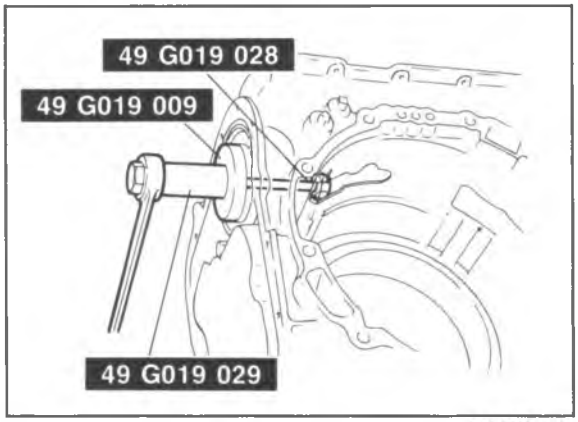

86U07B-142

6. Remove the servo.
   (1) Remove the snap ring with the **SST**.
   (2) Remove the servo and spring.

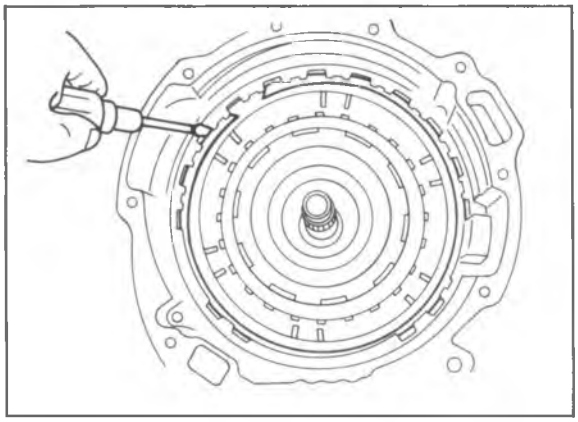

86U07B-143

7. Remove the one-way clutch and carrier hub assembly.
   (1) Remove the snap ring.

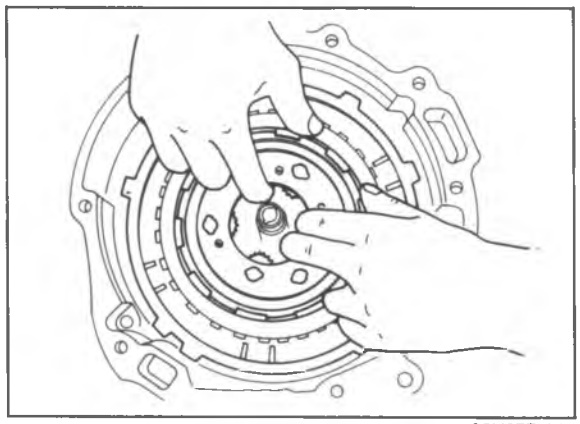

86U07B-144

(2) Remove the one-way clutch together with the carrier hub assembly.

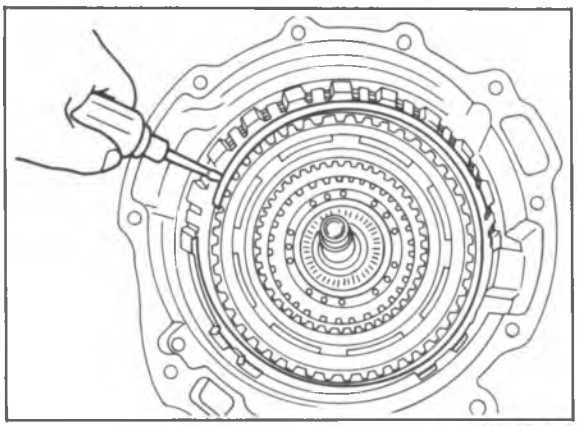

86U07B-145

8. Remove the low and reverse brake assembly.
   (1) Remove the snap ring.

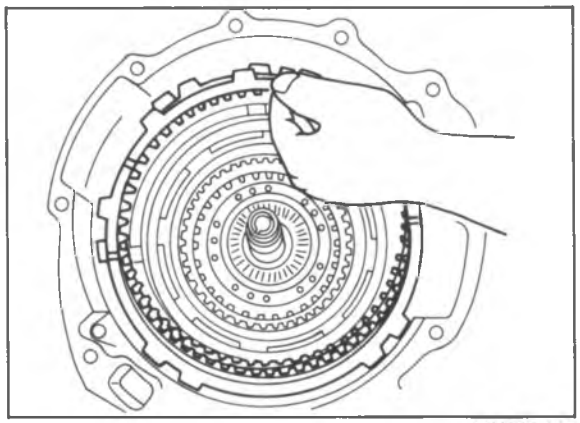

86U07B-146

(2) Remove the retaining plate and the drive and driven plates.

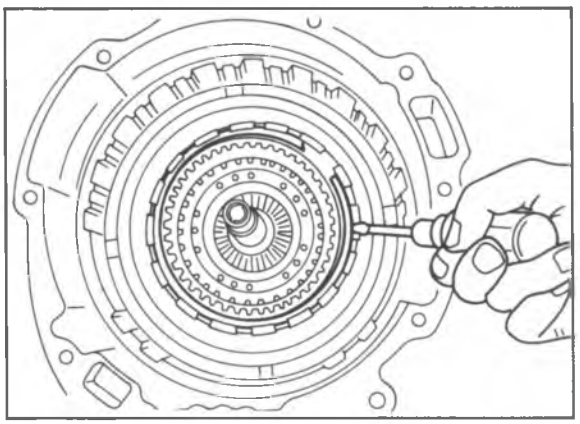

86U07B-147

9. Remove the internal gear.
   (1) Remove the snap ring.

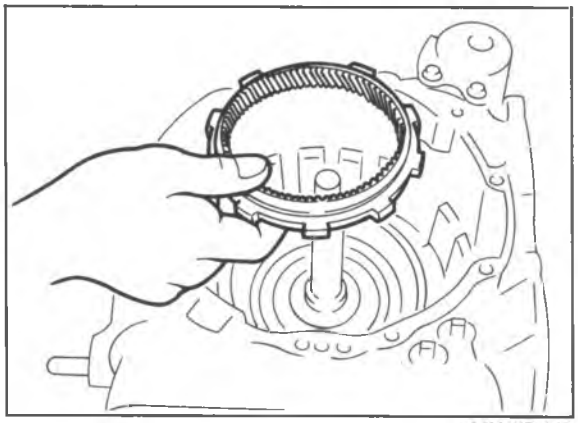

86U07B-148

(2) Remove the internal gear from the 3-4 clutch drum.

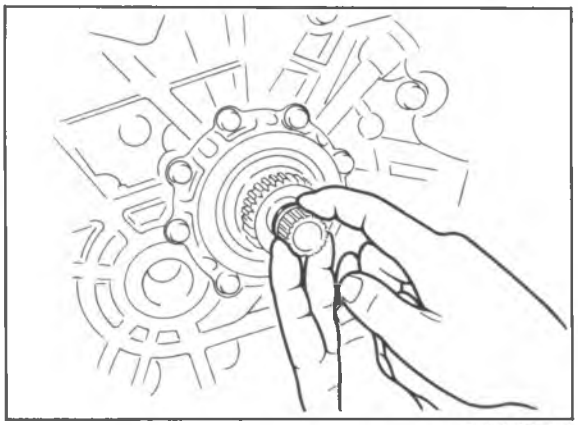

86U07B-149

10. Remove the 3-4 clutch assembly.
    (1) Remove the O-ring from the turbine shaft at the converter housing side.

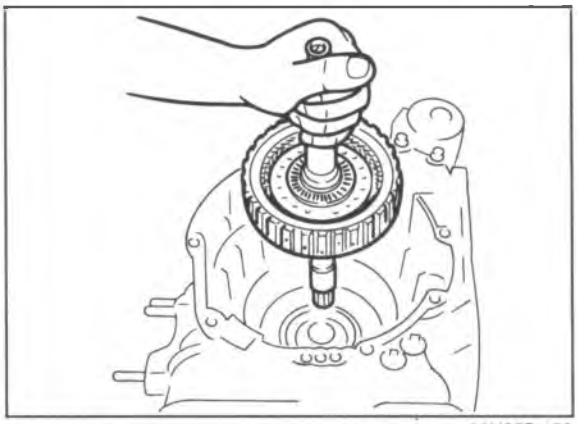

86U07B-150

(2) Pull out the turbine shaft to remove the 3-4 clutch assembly.
(3) Remove the 3-4 clutch assembly.

DISASSEMBLY-STEP 3
Component

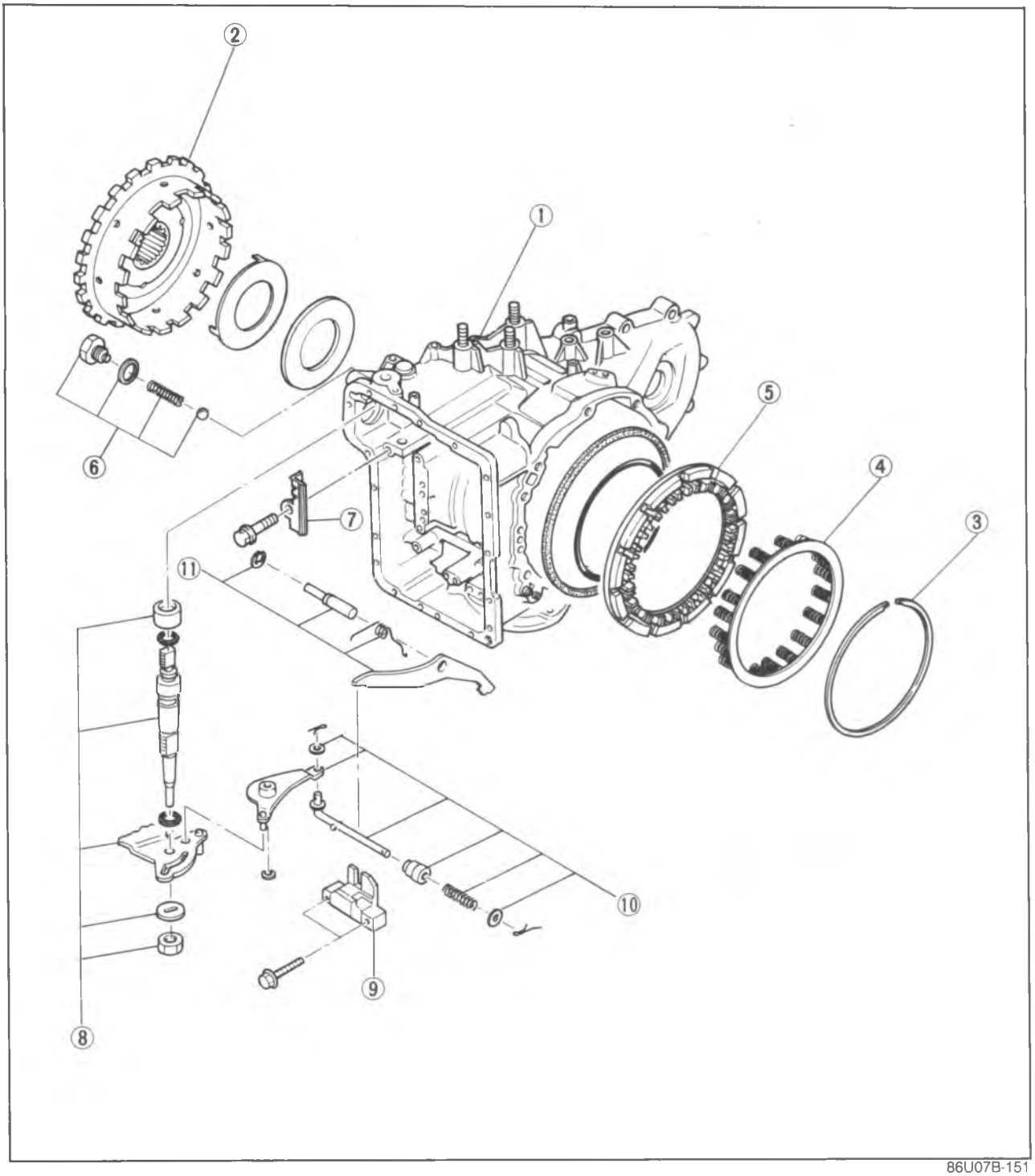

86U07B-151

1. Transaxle case
2. Output shell
3. Snap ring
4. Spring and retainer assembly
5. Low and reverse brake piston
6. Plug, washer, spring, and detent ball
7. Bracket
8. Manual shaft and manual plate
9. Actuator support
10. Parking assist lever
11. Parking pawl

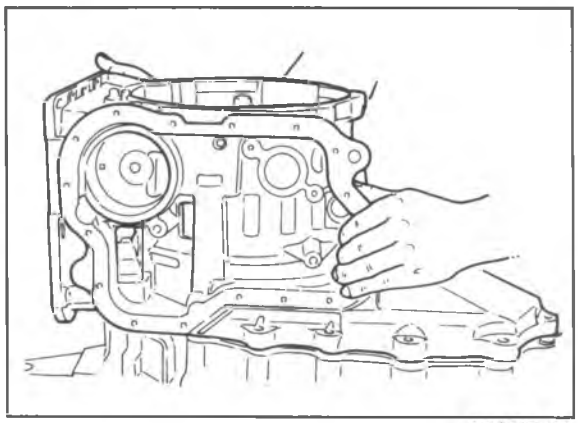

86U07B-152

1. Remove the bolts; then remove the transmission case by tapping lightly with a plastic hammer.

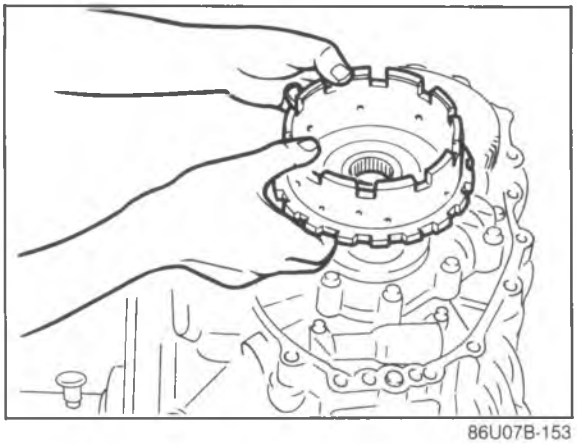

86U07B-153

2. Remove the output shell from the output gear.

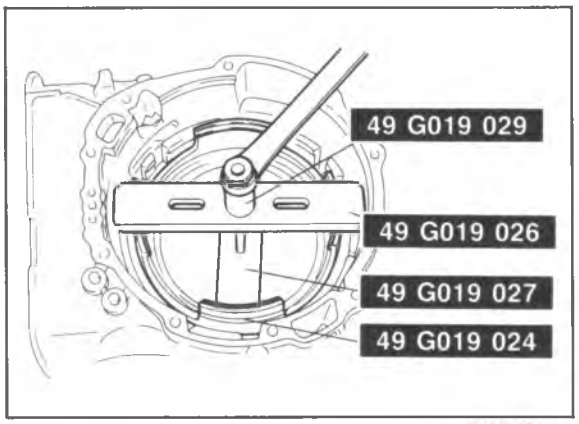

86U07B-154

3. Remove the low and reverse brake piston
   (1) Install the **SST**.
   (2) Compress the spring and retainer assembly.

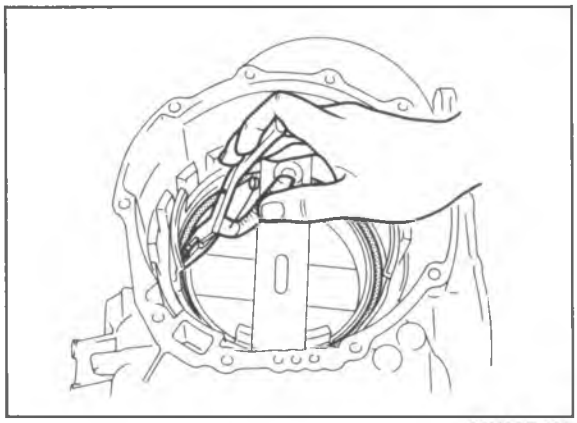

86U07B-155

   (3) Remove the snap ring with snap ring pliers; then remove the spring and retainer assembly.

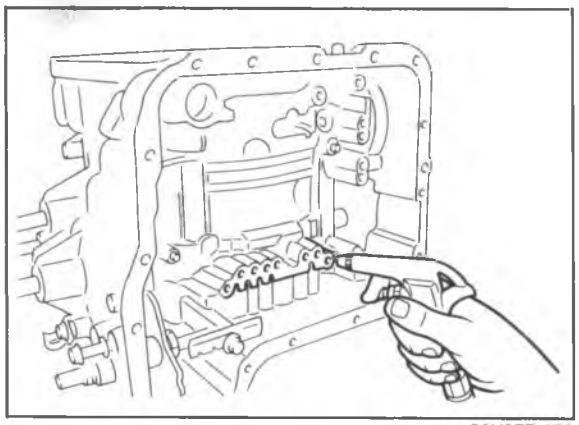

86U07B-156

(4) Remove the low and reverse brake piston by applying compressed air through the fluid passage.

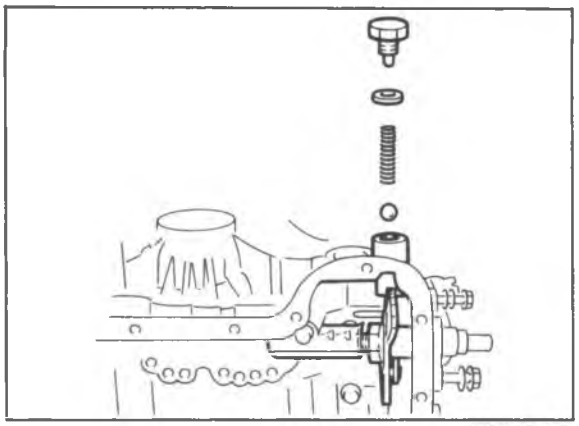

86U07B-157

4. Remove the manual shaft and manual plate.
   (1) Remove the plug, washer, spring, and detent ball.

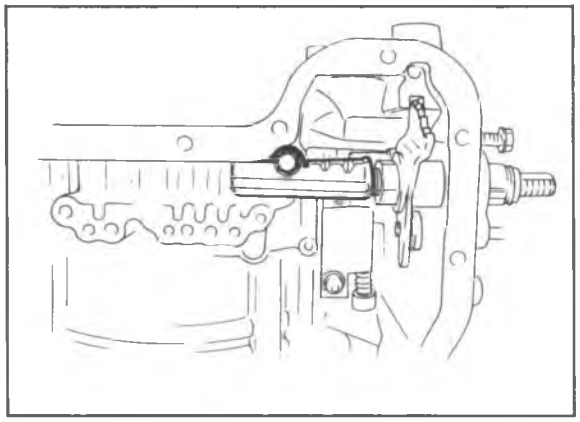

86U07B-158

(2) Remove the bracket.

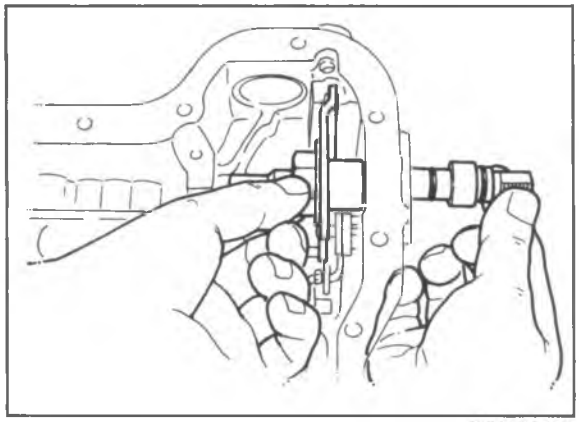

86U07B-159

(3) Loosen the nut and pull the manual shaft out.
(4) Remove the nut, washer, spacer, and manual plate.

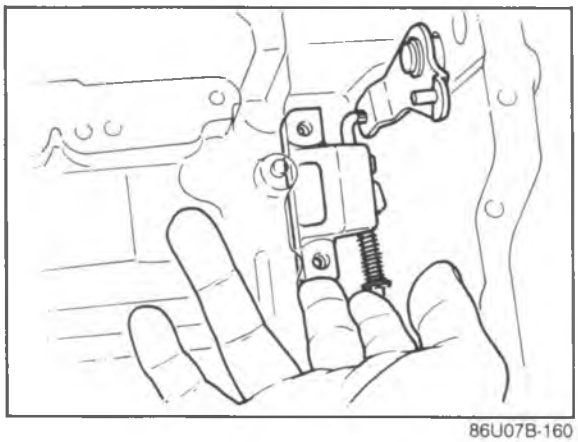

86U07B-160

5. Remove the actuator support.

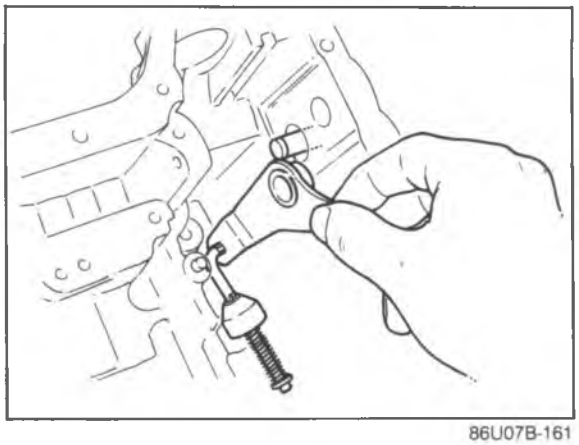

86U07B-161

6. Remove the snap ring; then remove the parking assist lever.

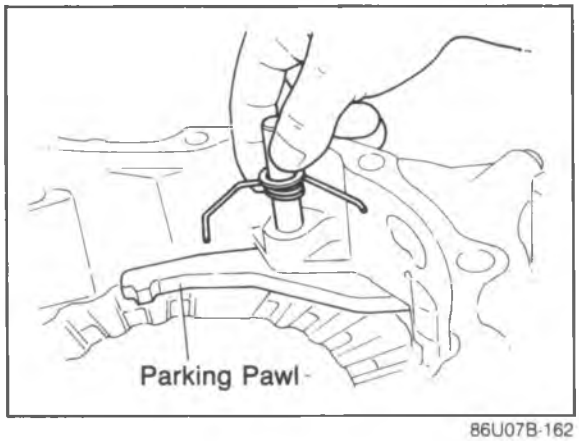

86U07B-162

7. Remove the parking pawl.
   (1) Remove the snap ring.
   (2) Pull the parking shaft, then remove the spring and parking pawl.

DISASSEMBLY-STEP 4
Component

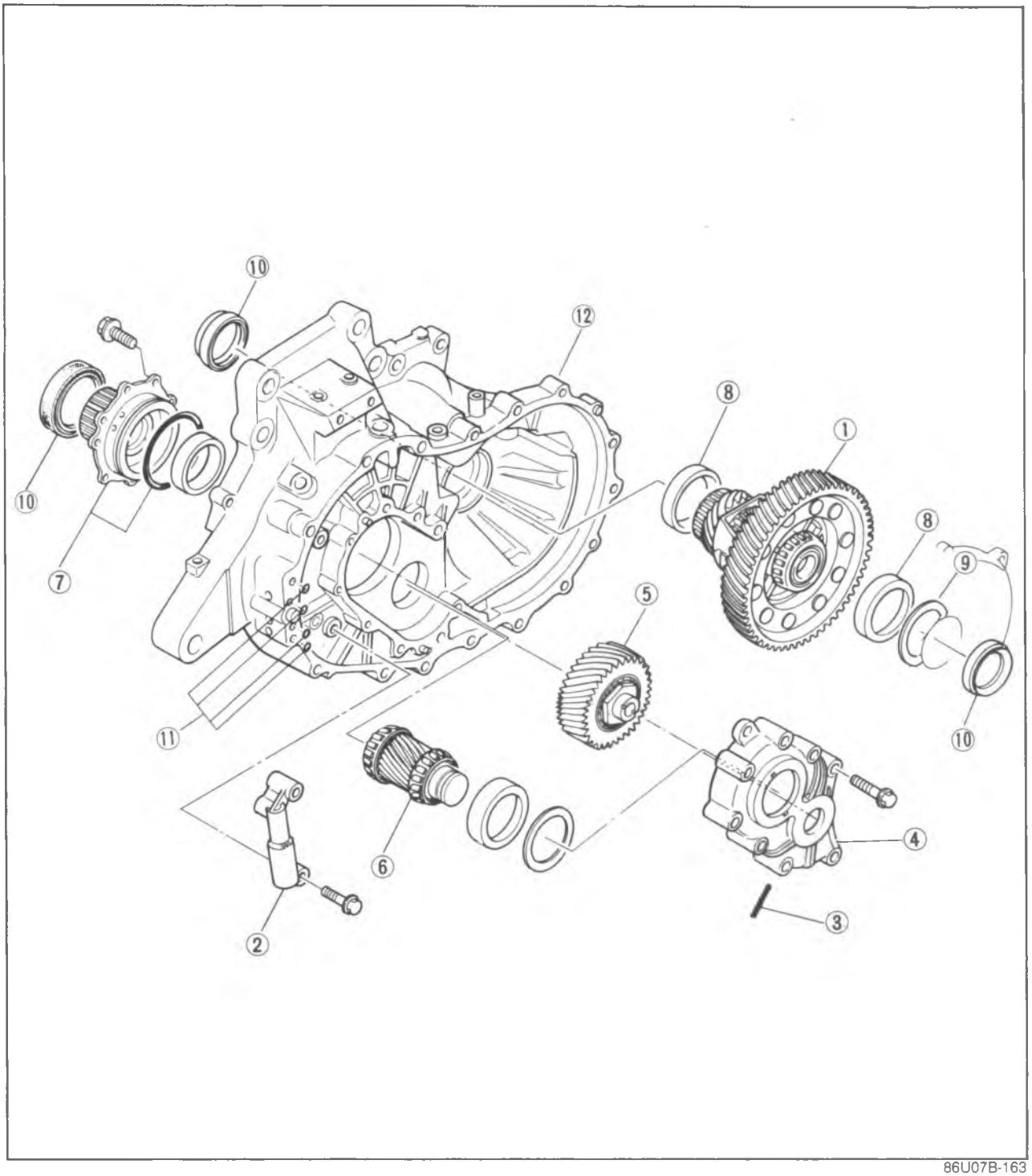

86U07B-163

1. Differential assembly
2. 2-3 accumulator piston assembly
3. Roll pin
4. Bearing housing
5. Idle gear assembly
6. Output gear assembly
7. Bearing cover assembly
8. Bearing outer races
9. Adjust shim
10. Oil seals
11. O-rings
12. Converter housing

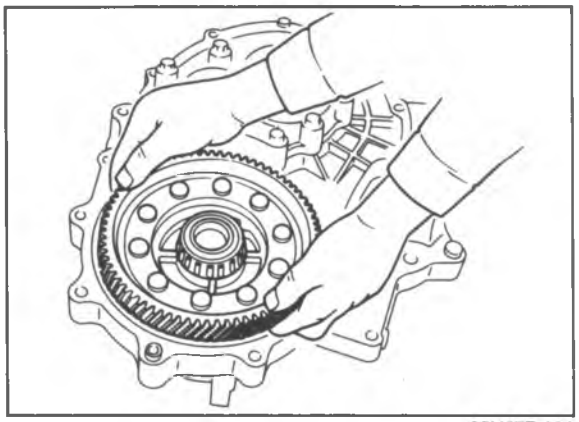

86U07B-164

Procedure

1. Remove the differential assembly.

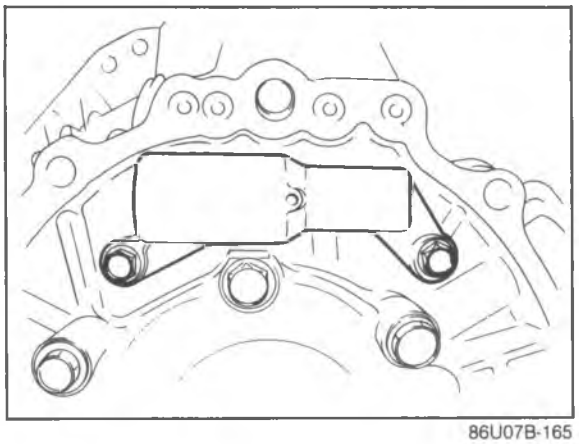

86U07B-165

2. Remove the 2-3 accumulator piston assembly.

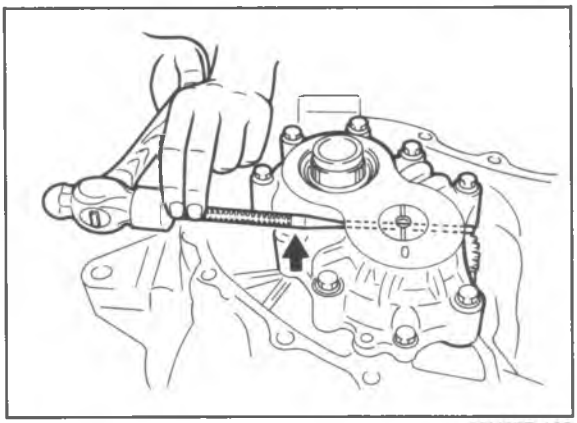

86U07B-166

3. Remove the bearing housing.
   (1) Remove the bolt indicated in the figure.
   (2) Remove the roll pin with a pin punch.
   (3) Remove the bearing housing by tapping lightly with a plastic hammer.

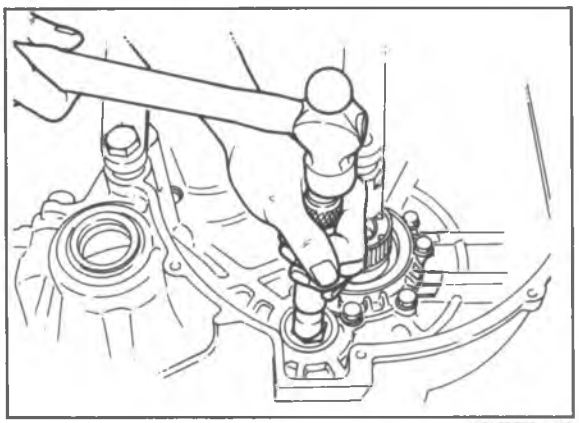

86U07B-167

4. Remove the idle gear assembly and output gear assembly by tapping out from the torque converter side.

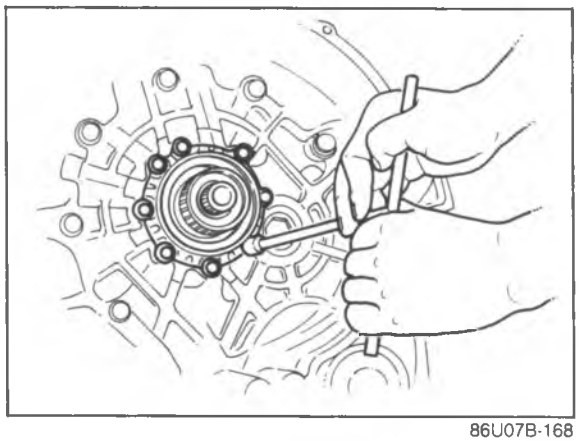

86U07B-168

5. Remove the bearing cover.
   (1) Remove the converter housing from the transaxle hanger.
   (2) Remove the bearing cover bolts.

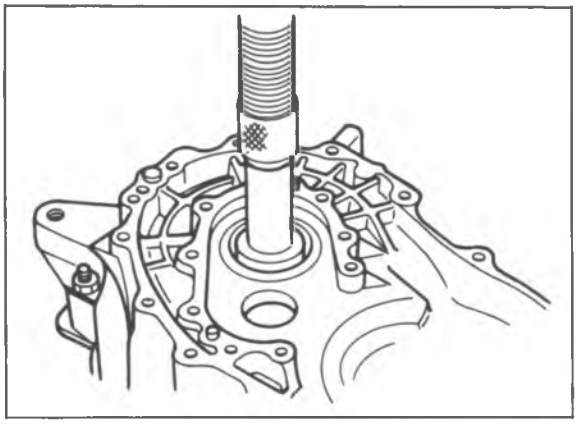

86U07B-169

   (3) Press the bearing cover assembly out of the converter housing.

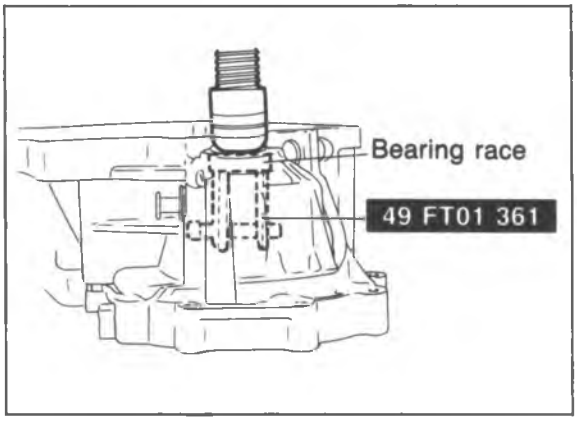

86U07B-170

6. Remove the bearing outer race.
   (1) Press out the bearing outer races with the **SST**.

   Note
   Install the bearing outer race during reassembly to adjust the preload.

7. Check the oil seals for damage, replace if necessary.
8. Check the O-rings for damage, replace if necessary.

INSPECTION AND REPAIR

PRECAUTION

(1) Several of the parts reassemble each other; organize them so that they do not get mixed up.
(2) Clean each part with cleaning oil, clean out the oil holes and oil passages with compressed air, and check that there are no obstructions.
(3) When using cleaning oil and compressed air, wear protective eyewear.
(4) If a clutch plate or brake band is replaced with a new one, soak it in ATF for 2 hours or more before installing.
(5) Before assembly, apply ATF to all seal rings, rotating parts, and sliding parts.
(6) All seals, gaskets and roll pins must be replaced with new ones during assembly.
(7) Use petroleum jelly, not grease where required.
(8) When it is necessary to replace a bushing, replace the assembly which includes that bushing.

86U07B-171

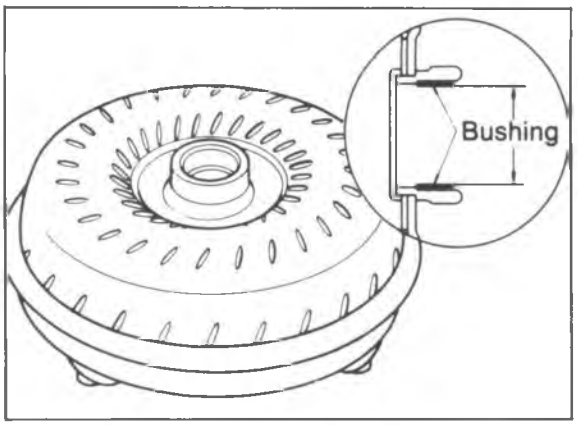

86U07B-172

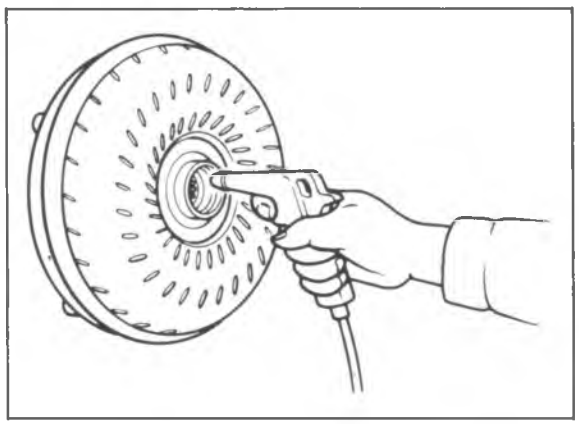

86U07B-173

TORQUE CONVERTER

The torque converter is welded together and cannot be disassembled.

Inspection

1. Check the outer part of the converter for damage or cracks, and replace it if necessary.
2. Check whether there is any rust on the pilot hub of the converter or on the boss. If there is any, remove it completely.
3. Measure the bushing of the converter boss. Replace the converter assembly if the bushing is worn.

Bushing inner diameter
Standard: 53.030 mm (2.088 in)
Maximum: 53.076 mm (2.090 in)

Washing Inside of Converter

1. Drain any ATF remaining in the converter.
2. Pour in solvent [approximately **0.5 liter (0.53 US qt, 0.44 Imp qt)**].
3. Shake the converter to clean the inside. Pour out the solvent.
4. Clean the inside of the converter with compressed air so that the inside is perfectly empty.
5. Pour in ATF.
6. Shake the converter to clean the inside. Pour out the ATF.

OIL PUMP

Disassembly

Disassemble in the sequence shown in the figure.

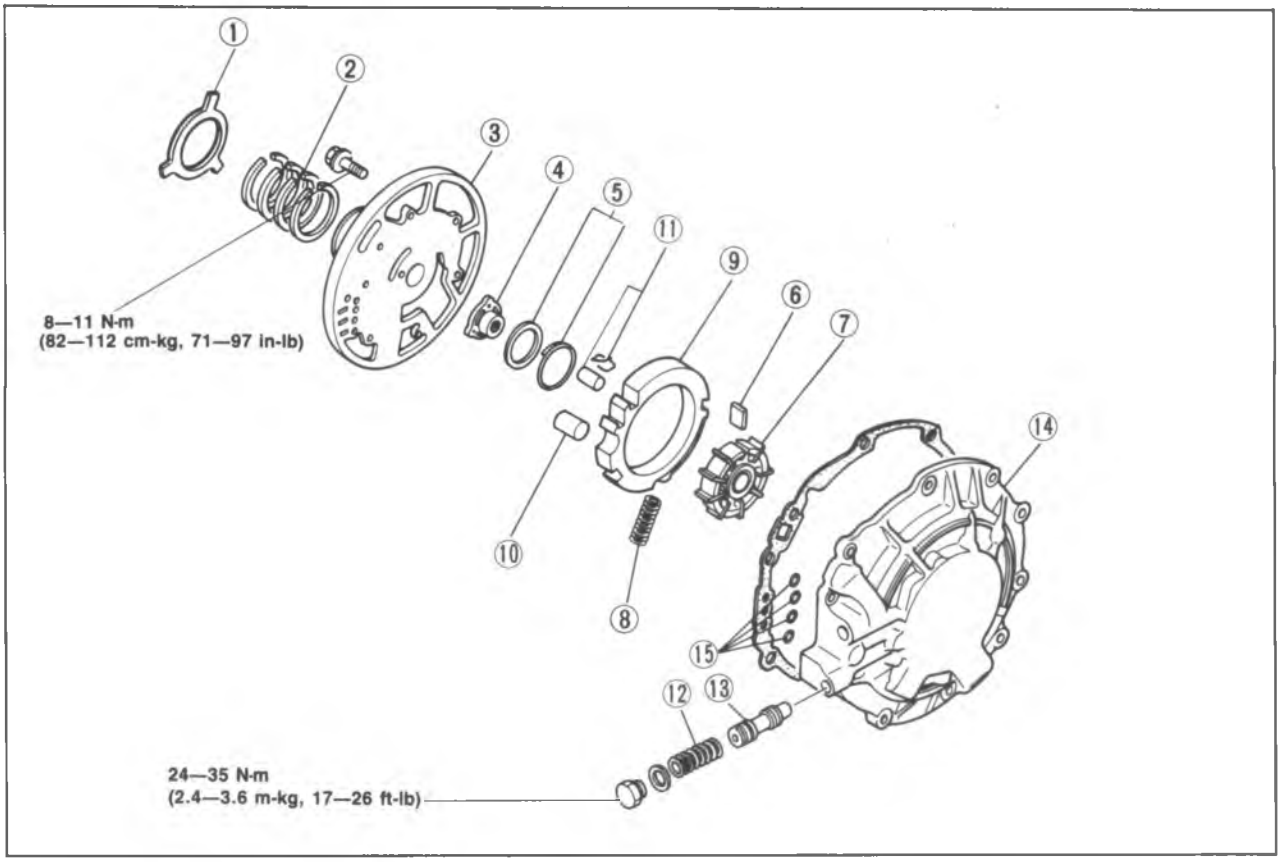

86U07B-174

1. Bearing race
2. Seal rings
3. Oil pump cover
4. Pump flange
5. Guide ring and guide spring
6. Vane
7. Rotor
8. Spring
9. Cam ring
10. Pivot roller
11. Seal pin and spring
12. Spring
13. Valve
14. Oil pump body
15. O-ring

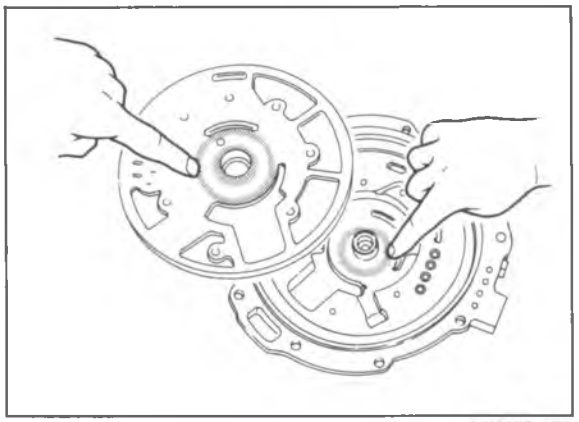

86U07B-175

Inspection

Check the following and replace any faulty parts.

1. Sliding surfaces of the oil pump cover and oil pump body for damage or wear
2. Broken or worn seal ring
3. Weakened spring

Free length of springs:
(1) For the cam ring (No. 8)
41.6 mm (1.64 in)
(2) For the valve (No. 12)
35.0 mm (1.38 in)

4. Clearance
Measure the clearances below; if not within specification, replace the oil pump.

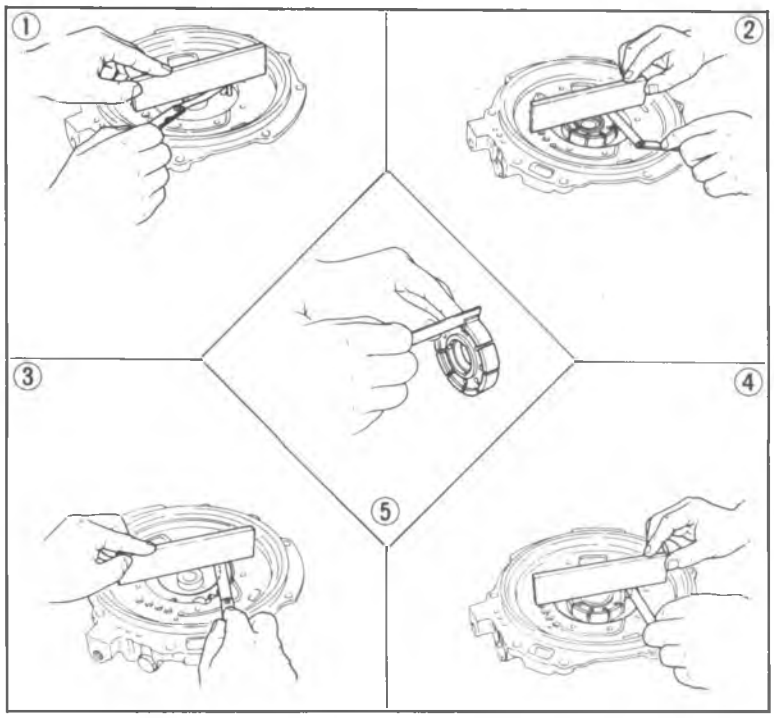

86U07B-176

1. Seal pin—Oil pump cover
Standard:
0.005—0.020 mm
(0.0002—0.0008 in)
Maximum: 0.060 mm (0.002 in)

2. Rotor—Oil pump cover
Standard:
0.005—0.020 mm
(0.0002—0.0008 in)
Maximum: 0.030 mm (0.0012 in)

3. Cam ring—Oil pump cover
Standard:
0.005—0.020 mm
(0.0002—0.0008 in)
Maximum: 0.080 mm (0.003 in)

4. Vane—Oil pump cover
Standard:
0.015—0.050 mm
(0.0006—0.0020 in)
Maximum: 0.080 mm (0.003 in)

5. Vane—Rotor groove
Standard:
0.010—0.045 mm
(0.0004—0.0018 in)
Maximum: 0.065 mm (0.0026 in)

5. Wear limit
Check each part for wear; if not within specification, replace the oil pump.

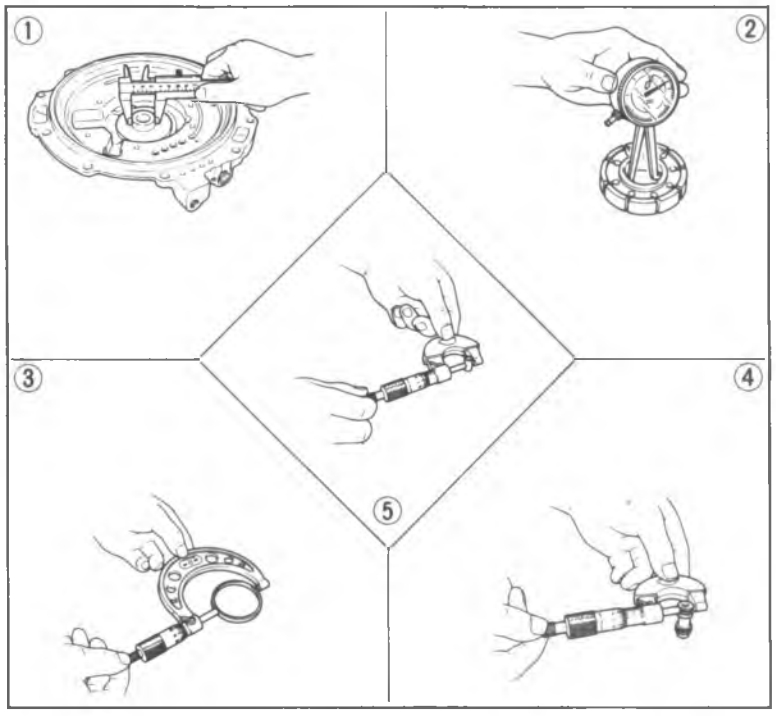

86U07B-177

1. Oil pump body sleeve.. outer diameter
Standard: 28.00 mm (1.102 in)

2. Rotor bushing .... inner diameter
Standard: 28.00 mm (1.102 in)
Maximum: 28.05 mm (1.104 in)

3. Guide ring ..... outer diameter
Standard: 57.85 mm (2.278 in)
Minimum: 57.70 mm (2.272 in)

4. Valve..... outer diameter
Standard: 12.00 mm (0.472 in)
Minimum: 11.86 mm (0.467 in)

5. Seal pin..... outer diameter
Standard: 6.00 mm (0.236 in)
Minimum: 5.90 mm (0.232 in)

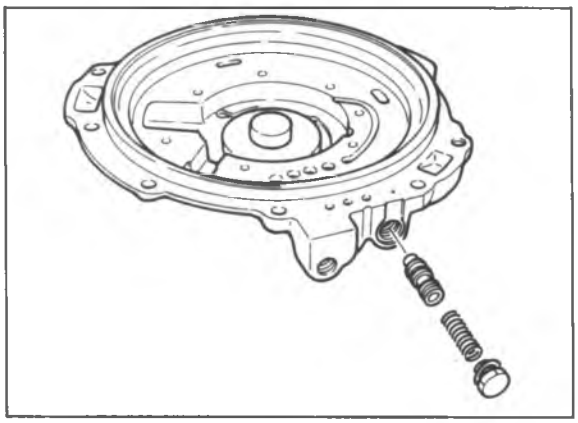

86U07B-178

Assembly

1. Install the valve and spring into the oil pump body, and check that the valve moves smoothly.
2. Install the plug.

Tightening torque:
24—35 N·m (2.4—3.6 m-kg, 17—26 ft-lb)

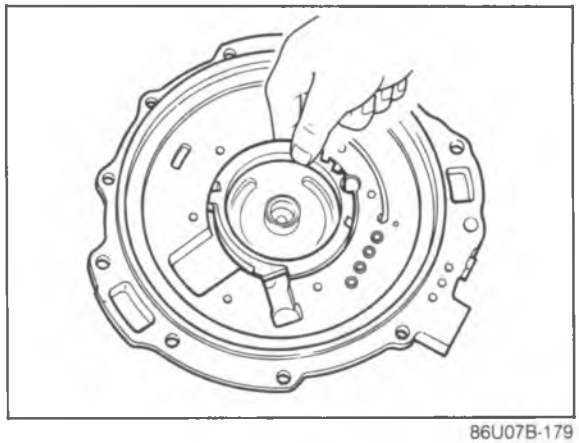

86U07B-179

3. Install the cam ring and pivot roller onto the oil pump body.

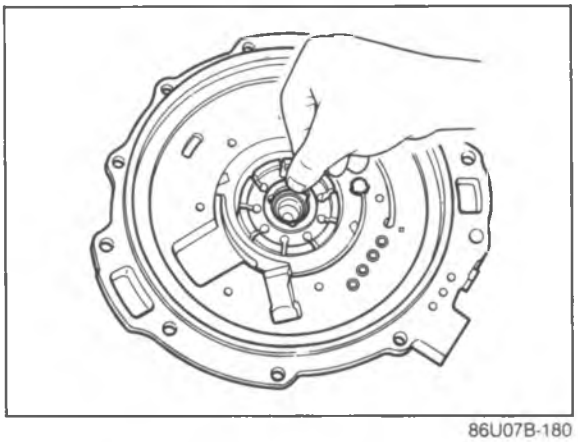

86U07B-180

4. Install the rotor onto the oil pump body.

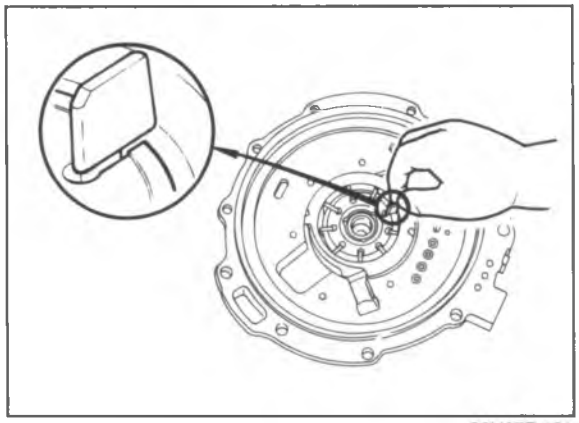

86U07B-181

5. Install the vanes into the rotor as shown.

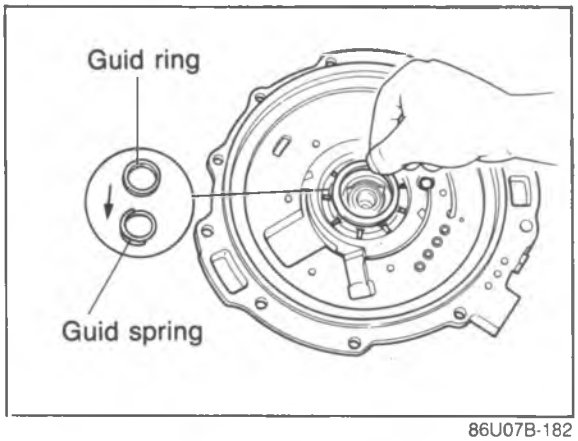

86U07B-182

6. Install the guide spring and guide ring while expanding the vanes toward the cam ring.

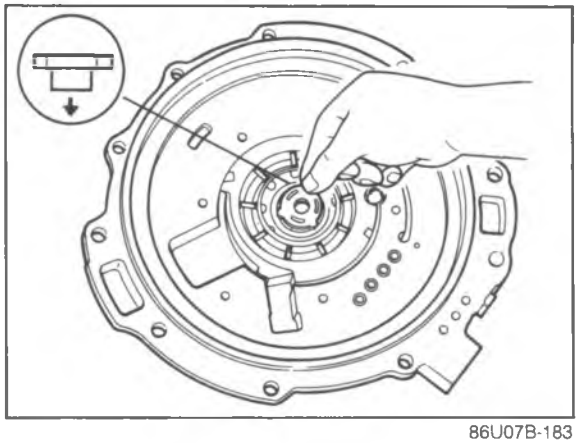

86U07B-183

7. Install the pump flange onto the rotor.

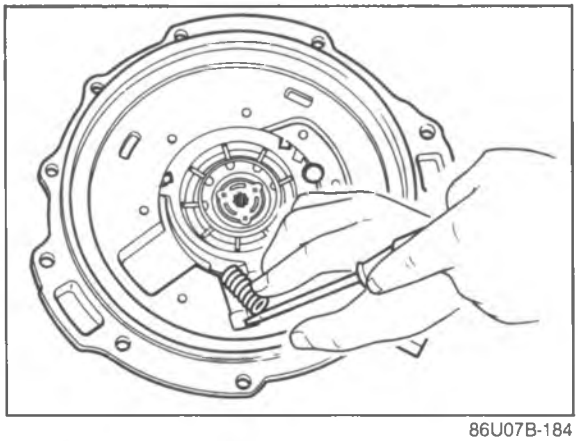

86U07B-184

8. Install the spring between the cam ring and oil pump body.

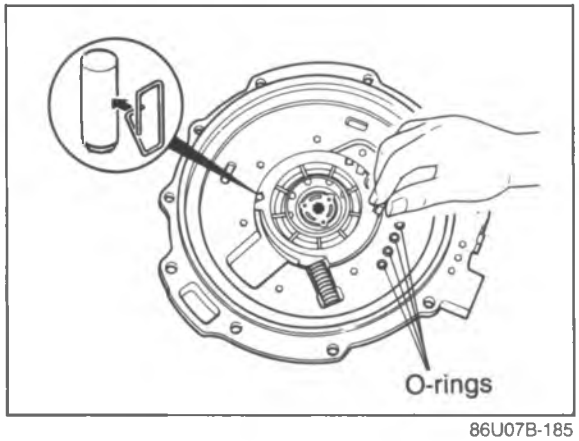

86U07B-185

9. Install the seal pins and springs with the pins facing toward the oil pump body.

Note
Install the seal pins round end first.

10. Install the O-rings.

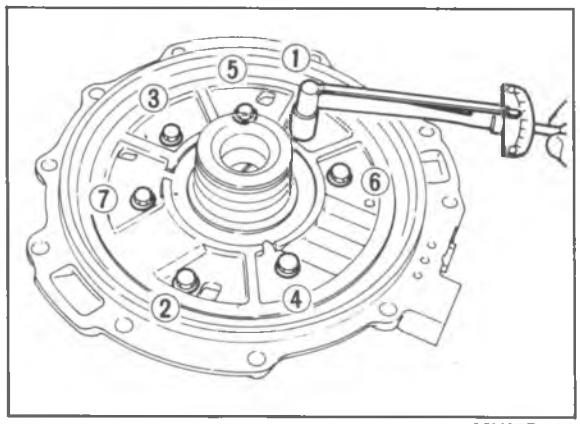

86U07B-186

11. Install the oil pump cover to the oil pump body. Tighten the bolts in sequence.

Tightening torque:
8—11 N·m (82—112 cm-kg, 71—97 in-lb)

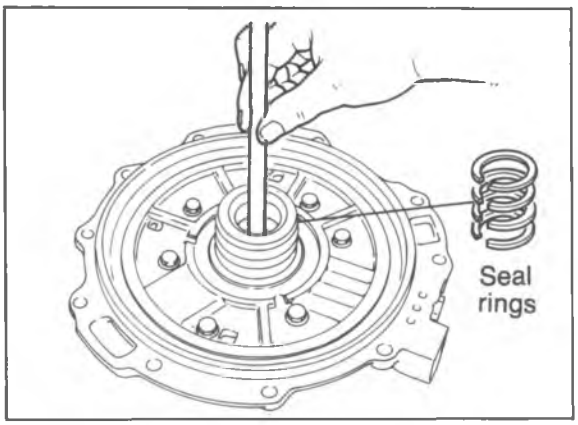

86U07B-187

12. Install the oil pump shaft and check for smooth oil pump operation.
13. Install the seal rings.

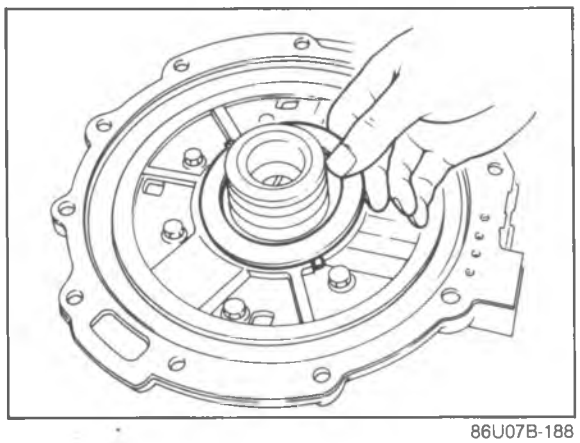

86U07B-188

14. Apply petroleum jelly to the bearing race to secure it to the oil pump cover; then install it on the oil pump cover.

Bearing race outer diameter:
88.0 mm (3.46 in)

CLUTCH ASSEMBLY

Disassembly

Disassemble in the sequence shown in the figure referring to the disassembly note for the specially marked parts.

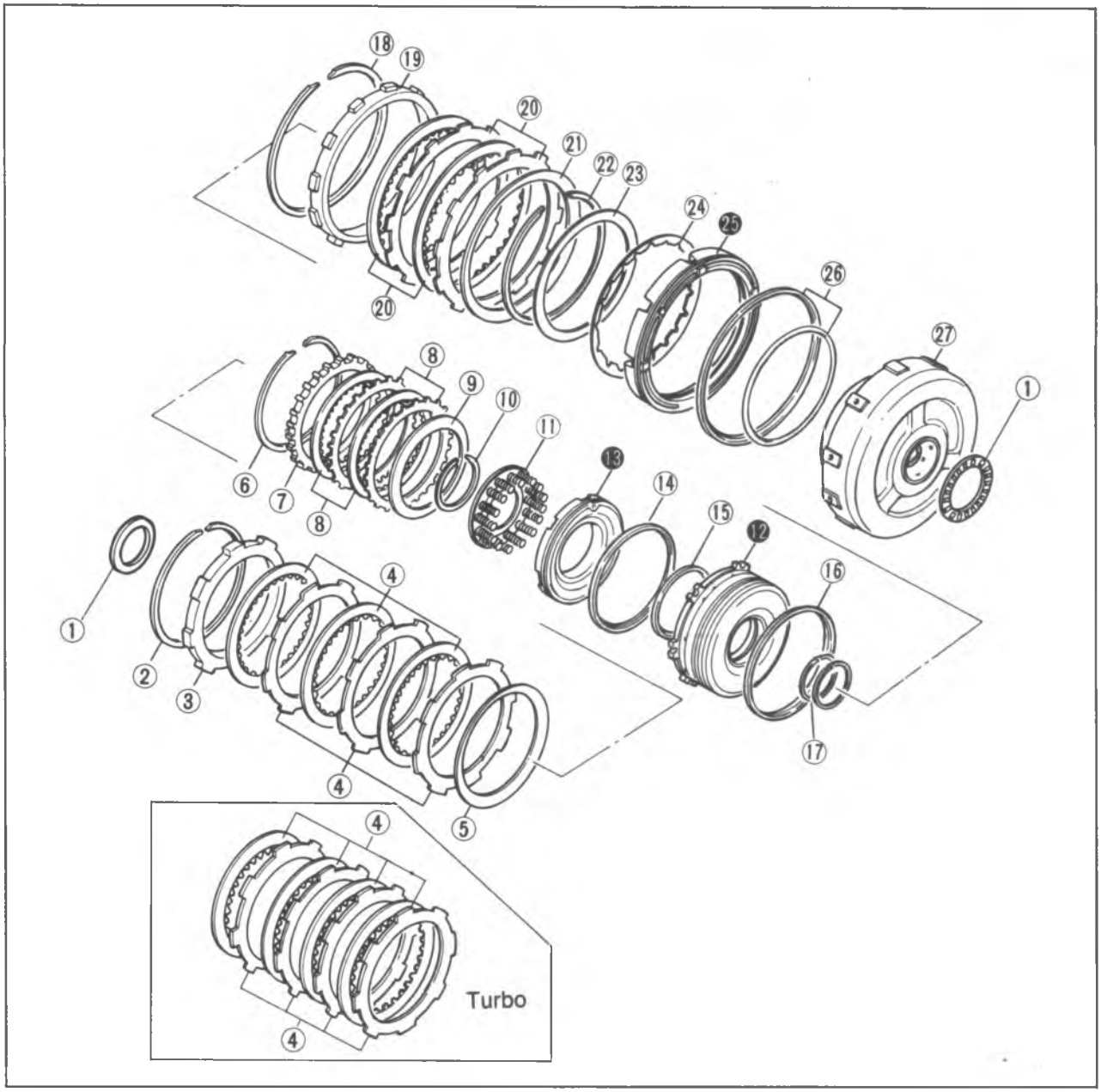

86U07B-189

—Forward clutch—
1. Thrust bearings
2. Snap ring
3. Retaining plate
4. Drive and driven plates
5. Dished plate

—Coasting clutch—
6. Snap ring
7. Retaining plate
8. Drive and driven plates
9. Dished plate
10. Snap ring
11. Spring and retainer assembly
12. Coasting clutch drum
13. Coasting piston
14. Outer seal
15. Inner seal
16. Outer seal
17. Seal rings

—Reverse clutch—
18. Snap ring
19. Retaining plate
20. Drive and driven plates
21. Dished plate
22. Snap ring
23. Return spring stopper
24. Piston return spring
25. Reverse piston
26. Seal rings (inner and outer)
27. Reverse and forward drum

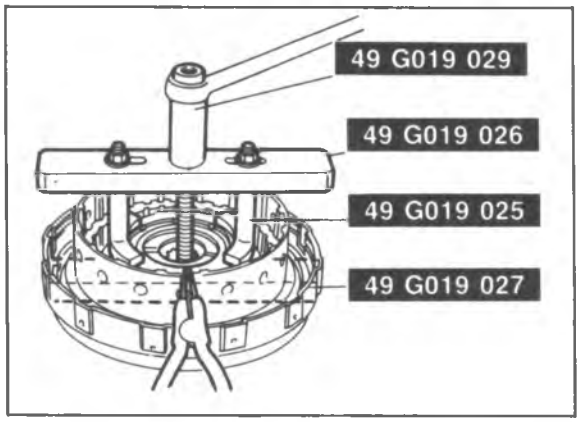

86U07B-190

Disassembly note
Coasting clutch drum

1. Install the **SST** in the coasting clutch drum as shown.
2. Compress the spring and retainer assembly.
3. Remove the snap ring.
4. Remove the **SST**, then remove the spring and retainer assembly.

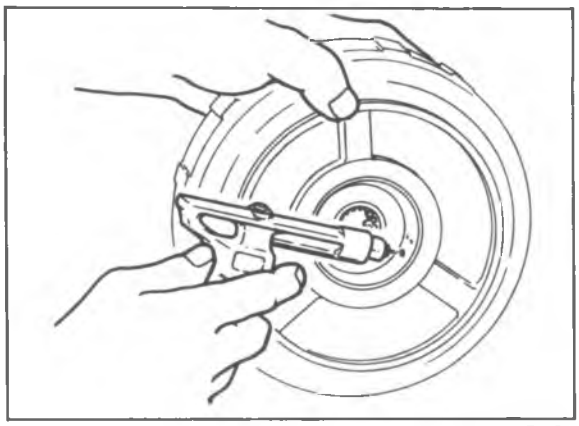
86U07B-191

5. Remove the coasting clutch drum from the reverse and forward drum by applying compressed air through the fluid passage.

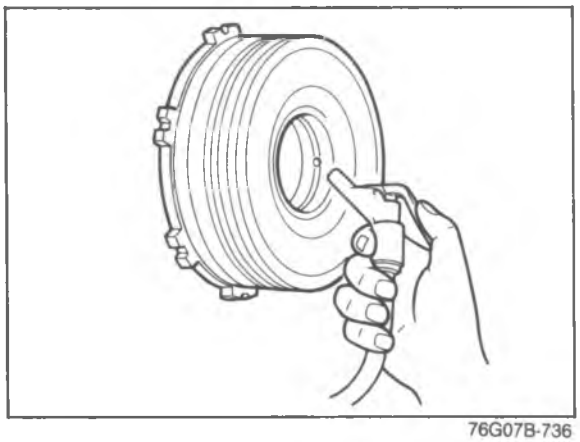
76G07B-736

Coasting piston

1. Remove the coasting clutch drum from the coasting clutch drum by applying compressed air through the fluid passage.

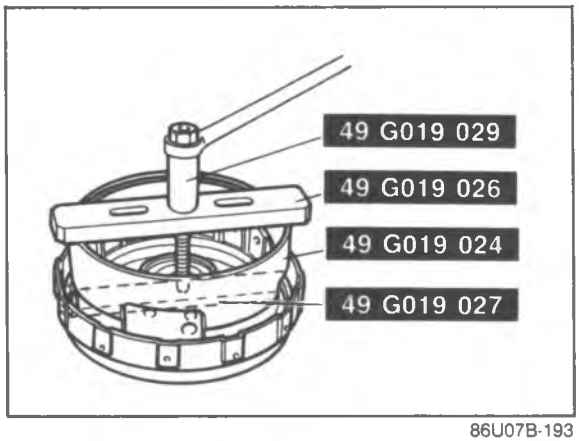

86U07B-193

Reverse piston

1. Install the **SST** in the reverse and forward drum as shown.
2. Compress the piston return spring.

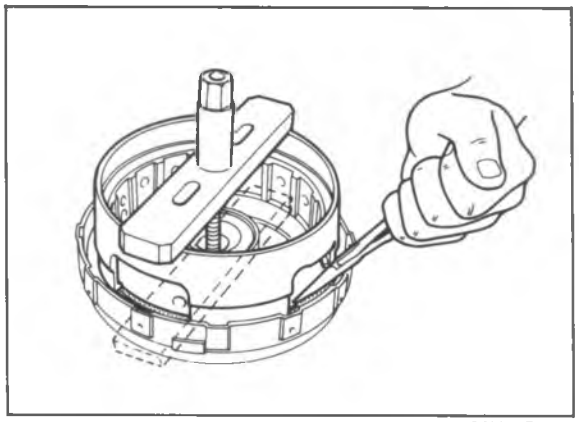

86U07B-194

3. Remove one end of the snap ring from the groove with snap ring pliers.

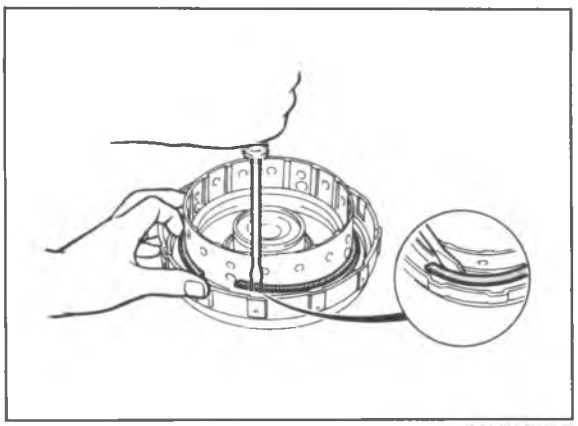

86U07B-195

4. Remove the **SST** from the reverse and forward drum.
5. Remove the snap ring with a screw driver.

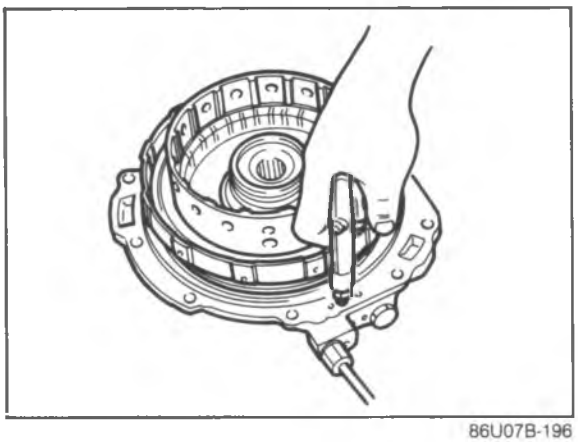

86U07B-196

6. Place the reverse and forward drum on the oil pump.
7. Remove the reverse piston by applying compressed air through the fluid passage.

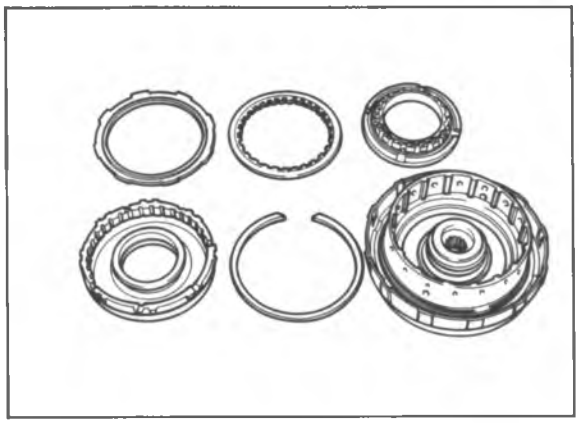

86U07B-197

Inspection

Check the following and repair or replace any faulty parts.

1. Drive and driven plates for damage or wear

   Drive plate thickness
   Standard: 1.6 mm (0.063 in)
   Minimum: 1.4 mm (0.055 in)

2. Clutch piston for damage or cracks
3. Clutch drum for damage or deformation
4. Seal contact area for damage
5. Check ball for leaking sticking
6. Broken or worn snap ring
7. Broken or weakened spring

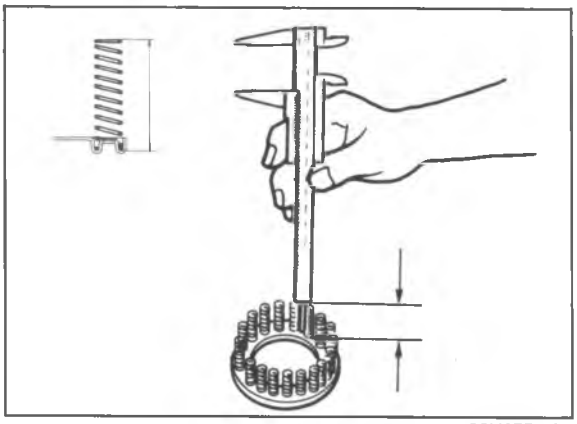

86U07B-198

6. Spring and retainer assembly for separation or deformation

Free length of spring:
29.8 mm (1.173 in)

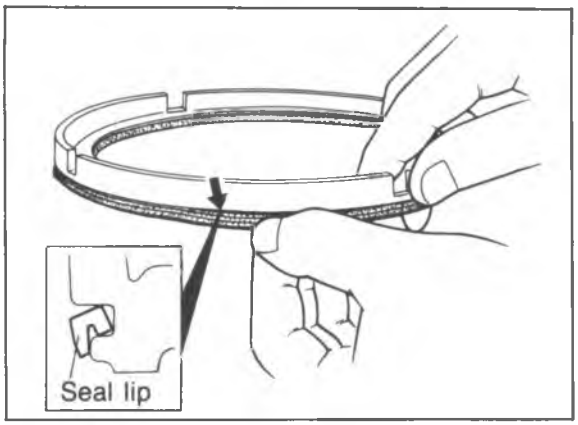

86U07B-199

Assembly
Reverse clutch

1. Install the reverse piston.
   (1) Apply ATF to inner and outer faces of the seals, and install them to the reverse piston.
   (2) Face the outer seal lip toward the inside by gently rolling it down around the circumference for easier installation into the reverse clutch drum.

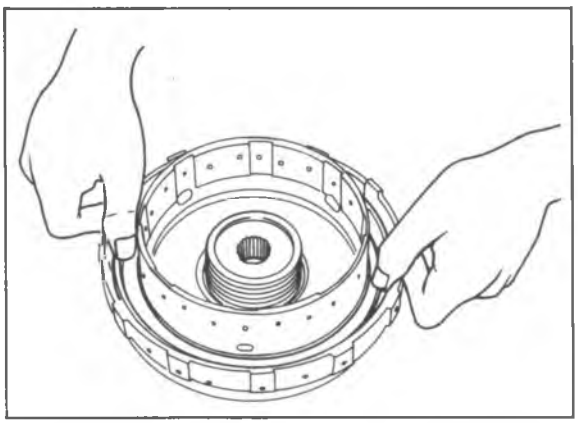

86U07B-200

   (3) Install the reverse piston by pushing evenly around the circumference, being careful not to damage the seal rings.

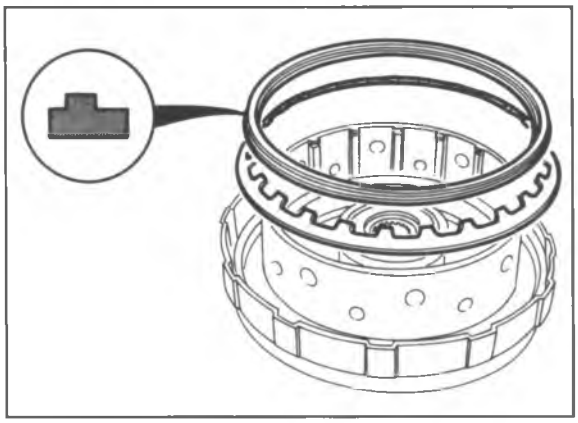

86U07B-201

2. Install the piston return spring with the tabs facing away from the reverse piston.
3. Install the return spring stopper with the step facing upwards.

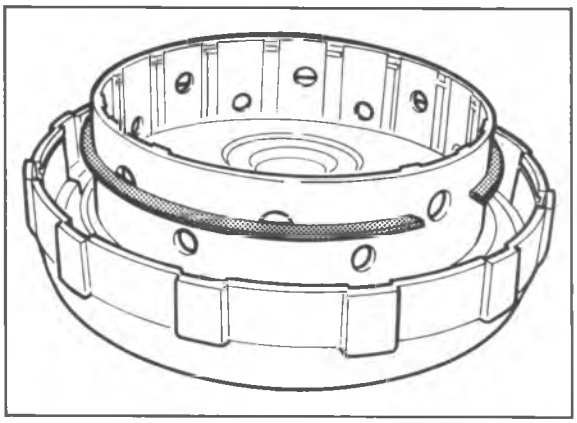

86U07B-202

4. Install the snap ring half-way down the reverse forward drum as shown.

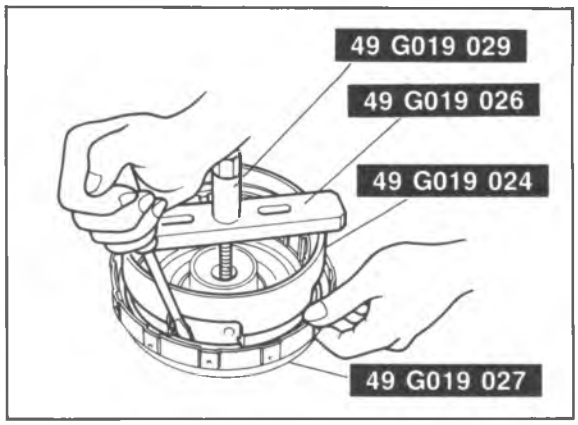

86U07B-203

5. Install the **SST** on the reverse and forward drum.
6. Compress the spring and retainer assembly.
7. Install the snap ring with a screwdriver.
8. Remove the **SST**.

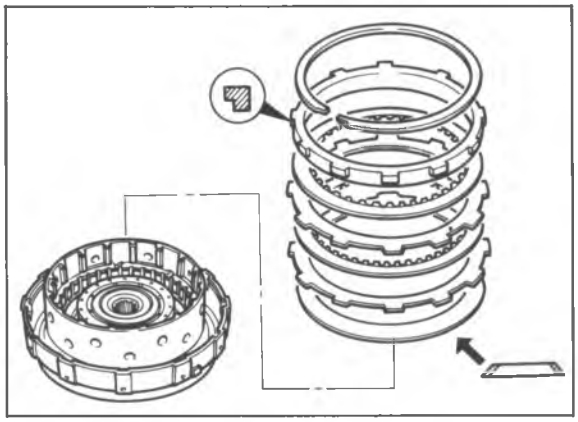

86U07B-204

9. Install the dished plate with the dished side facing the piston as shown.
10. Install the drive and driven plates.

Note
Installation order:
Driven-Drive-Driven-Drive

11. Install the retaining plate with the step facing downward.
12. Install the snap ring.

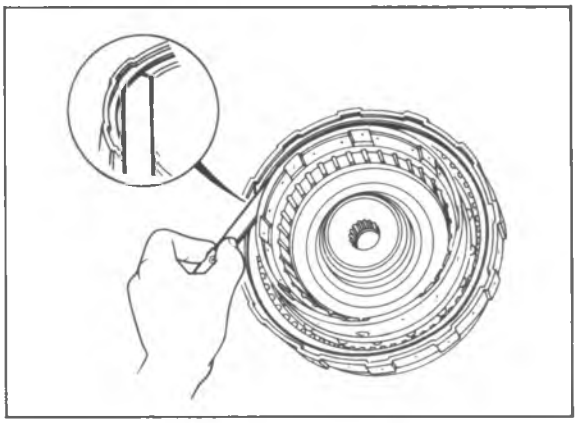

86U07B-205

13. Check the reverse clutch clearance.
    (1) Measure the clearance between the snap ring and the retaining plate of the reverse clutch.
    (2) If the clearance is not within specification, adjust it by selecting a proper retaining plate.

Reverse clutch clearance:
2.1—2.4 mm (0.083—0.094 in)

Retaining plate sizes mm (in)

6.6 (0.260)	6.8 (0.268)	7.0 (0.276)
7.2 (0.283)	7.4 (0.291)	7.6 (0.299)

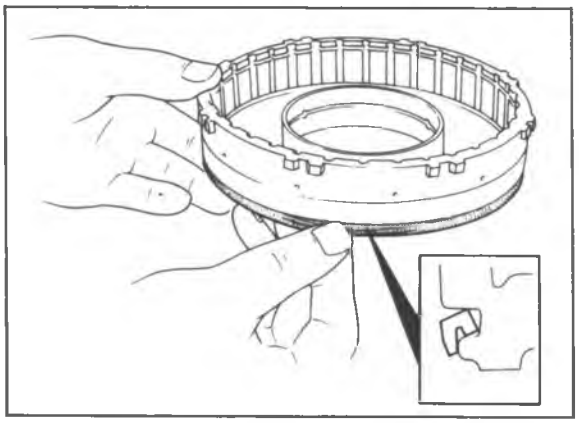

86U07B-206

Coasting clutch

1. Install the coasting clutch drum.
   (1) Apply ATF to inner and outer faces of the seal, and install it onto the coasting clutch drum.
   (2) Face the outer seal lip toward the inside by gently rolling it down around the circumference for easier installation into the drum.

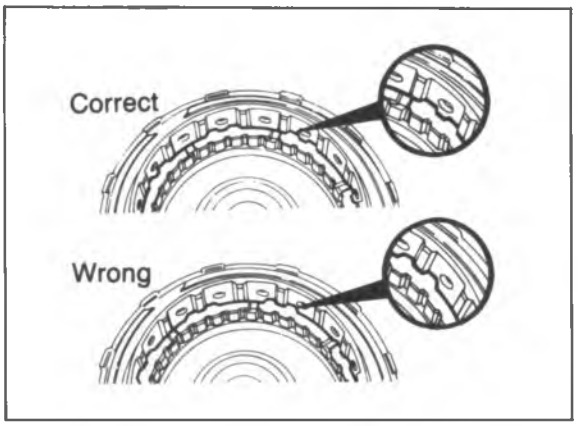

86U07B-207

   (3) Install the coasting clutch drum the correct position in the reverse and forward drum.
   (4) Push evenly around the circumference, being careful not to damage the outer seal.

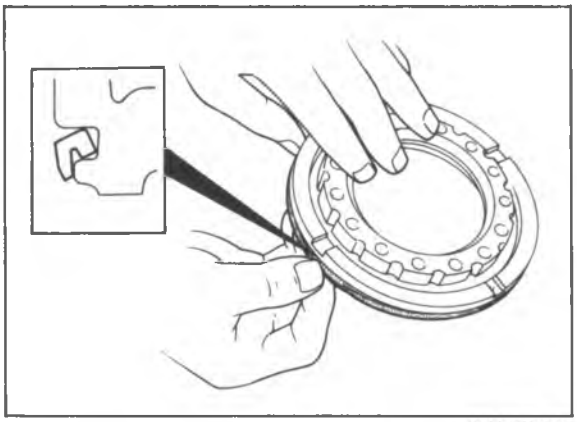

86U07B-208

2. Install the coasting piston
   (1) Apply ATF to inner and outer faces of the seals and install them onto the coasting piston.
   (2) Face the outer seal lip toward the inside by gently rolling it down around the circumference for easier installation into the drum.

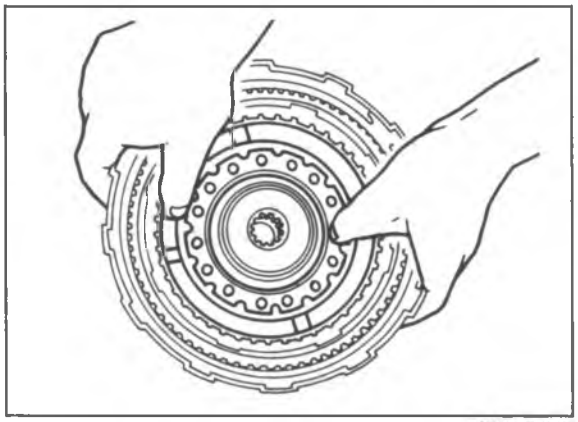

86U07B-209

   (3) Install the coasting piston by pushing evenly around the circumference, being careful not to damage the outer seal.

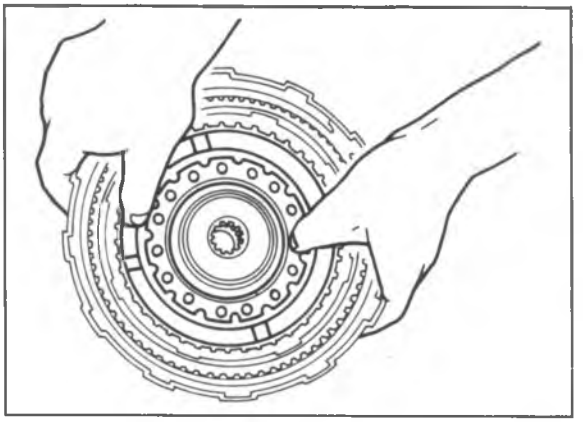

86U07B-210

3. Install the spring and retainer assembly.

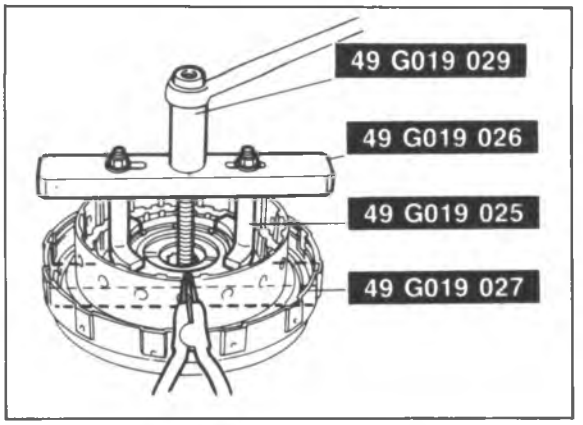

86U07B-211

4. Install the **SST** in the coasting clutch as shown.
5. Compress the spring and retainer assembly.
6. Install the snap ring.
7. Remove the **SST**.

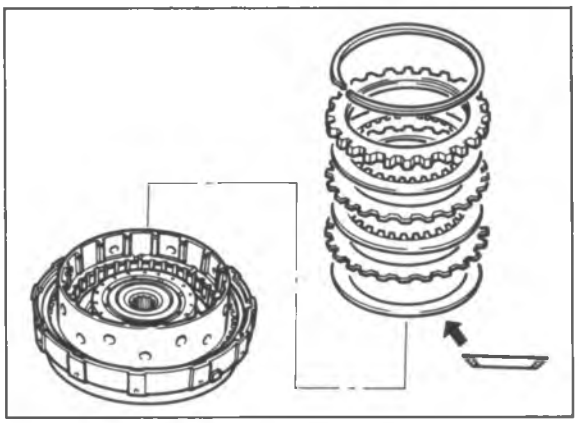

86U07B-212

8. Install the dished plate with the dished side upward.
9. Install the drive and driven plates.

Note
Installation order:
Driven-Drive-Driven-Drive

10. Install the retaining plate.
11. Install the snap ring.

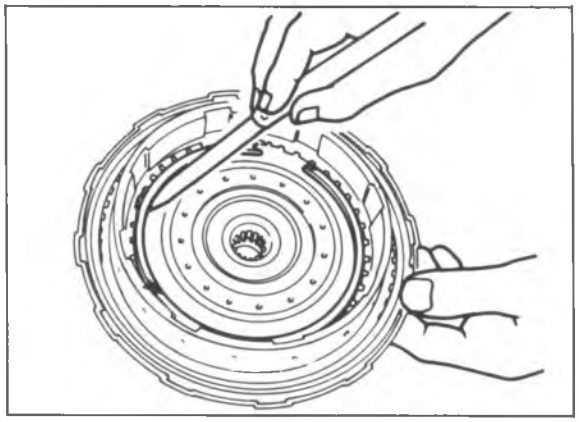

86U07B-213

12. Check the coasting clutch clearance.
    (1) Measure the clearance between the snap ring and the retaining plate of the coasting clutch.
    (2) If the clearance is not within specification, adjust it by selecting a proper retaining plate.

Coasting clutch clearance:
1.0—1.2 mm (0.040—0.047 in)

Retaining plate sizes mm (in)

4.6 (0.181)	4.8 (0.189)	5.0 (0.197)
5.2 (0.205)	5.4 (0.213)	5.6 (0.220)

Caution
The 5.6 mm (0.220 in) retaining plate use only for Non-Turbo.

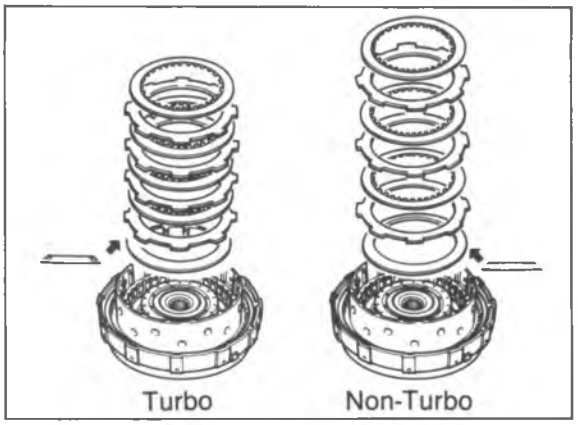

86U07B-214

Forward clutch

1. Install the dished plate with the dished side downward.
2. Install the drive and driven plates.

Note
Installation order:
Non-Turbo model
Driven-Drive-Driven-Drive-Driven-Drive
Turbo model
Driven-Drive-Driven-Drive-Driven-Drive-Driven-Drive

3. Install the retaining plate.
4. Install the snap ring.

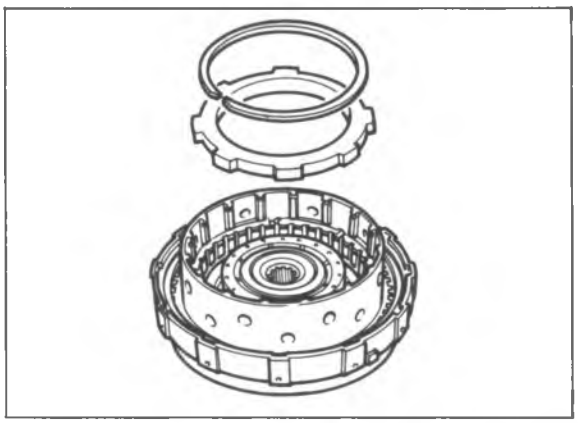

86U07B-215

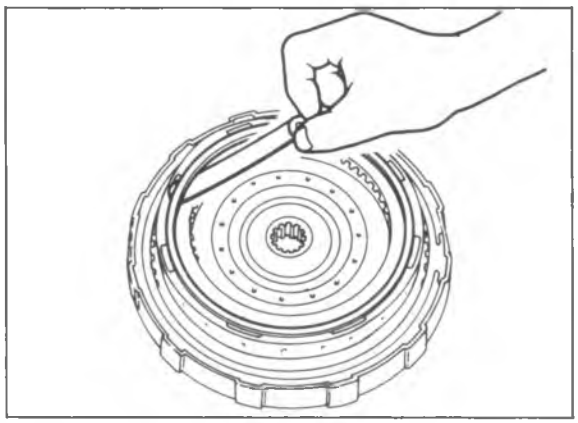

86U07B-216

5. Check the forward clutch clearance.
    (1) Measure the clearance between the snap ring and the retaining plate of the forward clutch.
    (2) If the clearance is not within specification, adjust it by selecting a proper retaining plate.

Forward clutch clearance:
1.0—1.2 mm (0.040—0.047 in)

Retaining plate sizes mm (in)

5.9 (0.232)	6.1 (0.240)	6.3 (0.248)
6.5 (0.256)	6.7 (0.264)	8.9 (0.350)

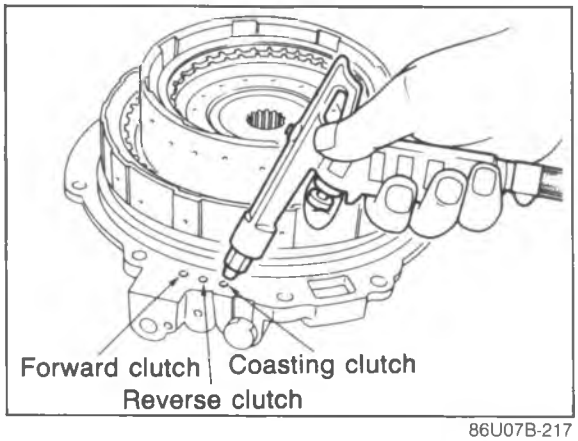

86U07B-217

6. Check for the clutch operation as follows.
   (1) Set the clutch assembly onto the oil pump.
   (2) Check the clutch operation by applying compressed air through the fluid passages as shown.

Applied air pressure:
392 kPa (4.0 kg/cm^2, 57 psi)

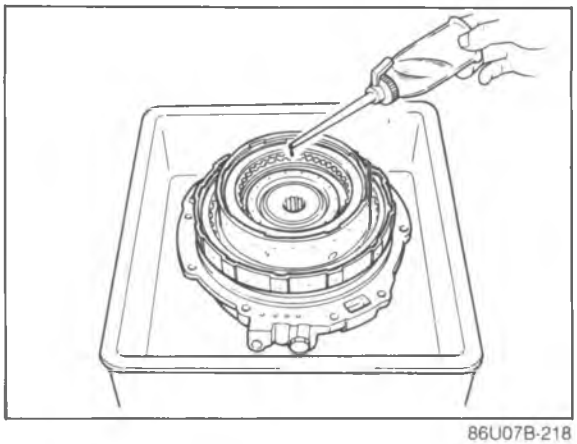
86U07B-218

(3) Pour in ATF so that the reverse piston, coasting clutch drum, and coasting clutch piston are fully submerged.

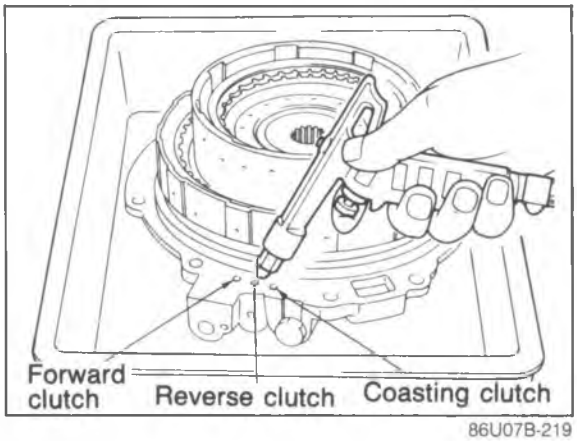

86U07B-219

(4) Check that no bubbles come from between the piston and drum seal when applying compressed air through the fluid passages as shown.

Caution
The compressed air must be under 392 kPa (4.0 kg/cm^2, 57 psi), and should not applied for over 3 seconds.

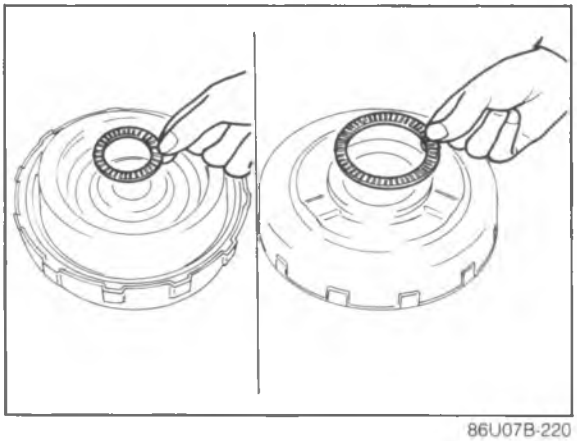
86U07B-220

7. Apply petroleum jelly to the thrust bearings to secure them; then install them on both sides of the reverse and forward drum.

Thrust bearing outer diameter
Oil pump side: 86.0 mm (3.39 in)

Small sun gear and one-way clutch side:
56.1 mm (2.21 in)

SMALL SUN GEAR AND ONE-WAY CLUTCH

Disassembly

Disassemble in the sequence shown in the figure.

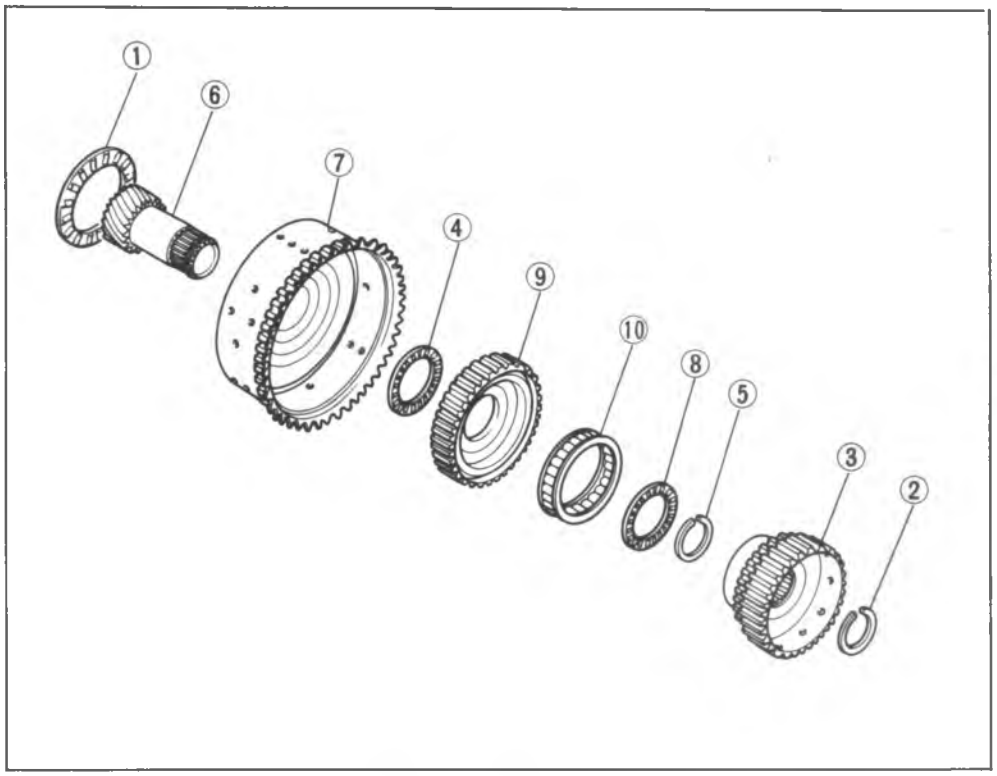

86U07B-221

1. Thrust bearing
2. Snap ring
3. One-way clutch inner race
4. Thrust bearing
5. Snap ring
6. Small sun gear
7. Sun gear drum
8. Thrust bearing
9. One-way clutch outer race
10. One-way clutch

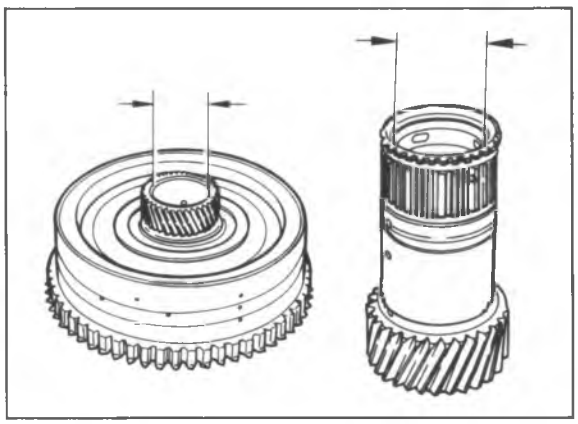

86U07B-222

Inspection

Check the following and replace any faulty parts.

1. Sun gear drum and small sun gear for damage or wear
2. Bushing for damage or wear

Specification:

Sun gear drum: 33.425 mm (1.316 in) max.
Small sun gear: 24.021 mm (0.946 in) max.

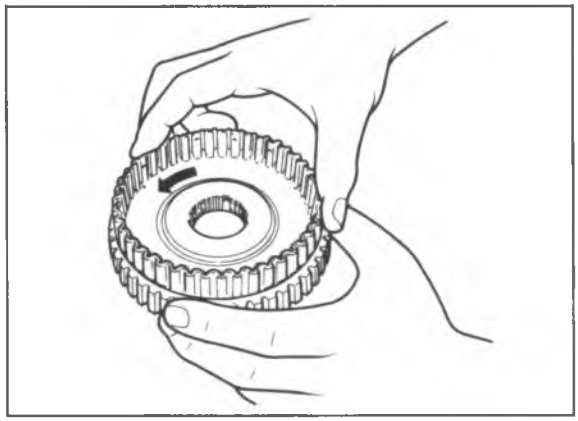

86U07B-223

3. Inner and outer race for damage or wear
4. Damaged or worn clutch hub
5. Damaged or worn gear
6. Damaged or worn thrust bearing
7. Broken or worn snap ring
8. One-way clutch operation
   Hold the one-way clutch outer race. Check that the inner race turns only counterclockwise.

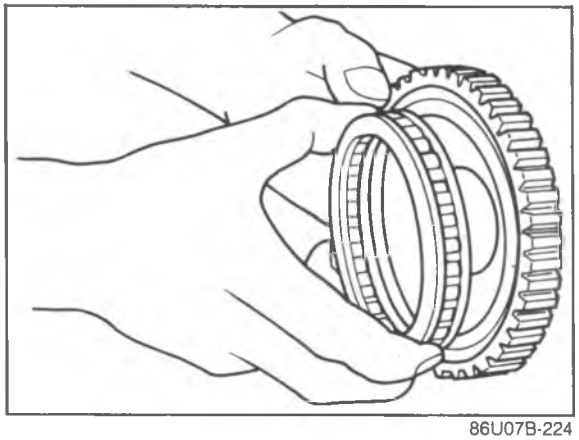

86U07B-224

Replacement of one-way clutch

1. Remove the one-way clutch inner race.
2. Remove the one-way clutch.
3. Remove the thrust bearing.

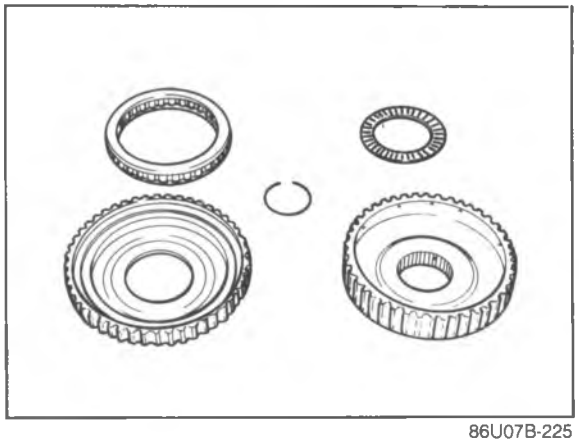

86U07B-225

4. Inspect the one-way clutch inner and outer race, and replace if necessary.

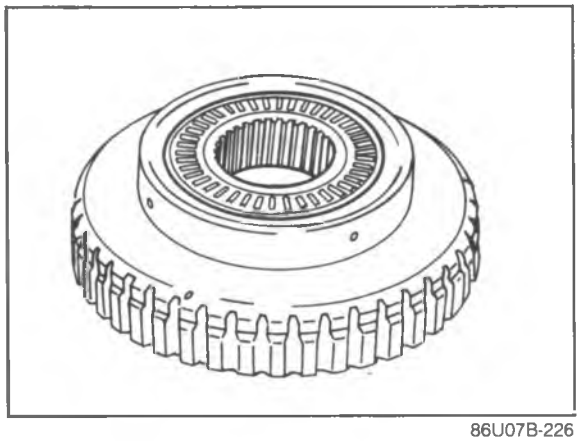

86U07B-226

5. Apply petroleum jelly to the thrust bearing to secure it; then install it to the one-way clutch inner race.

   Thrust bearing outer diameter:
   62.1 mm (2.44 in)

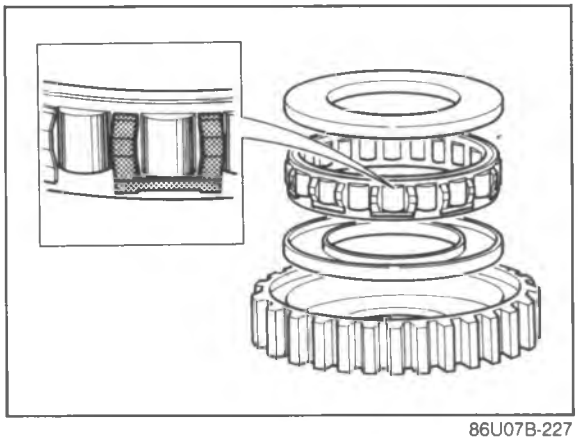

86U07B-227

6. Install the one-way clutch into the one-way clutch outer race.

   Caution
   Check that the spring cage of the one-way clutch faces toward the outer race.

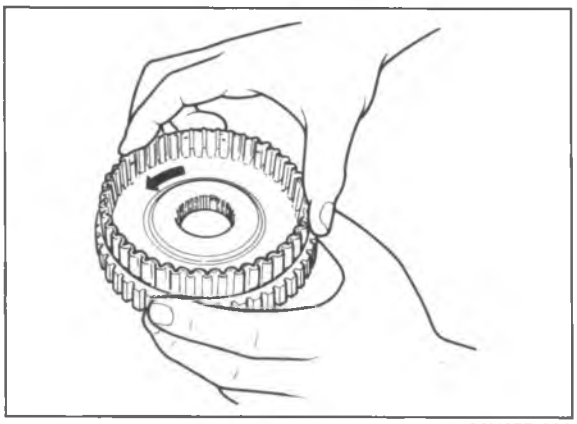

86U07B-228

7. Install the one-way clutch inner race into the one-way clutch outer race by turning inner race counterclockwise.
8. Hold the one-way clutch outer race. Check that the inner race turns only counterclockwise.

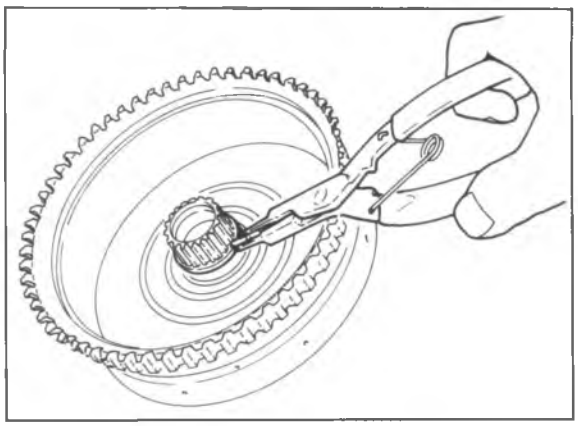

86U07B-229

Assembly

1. Install the small sun gear into the sun gear drum.
2. Install the snap ring.

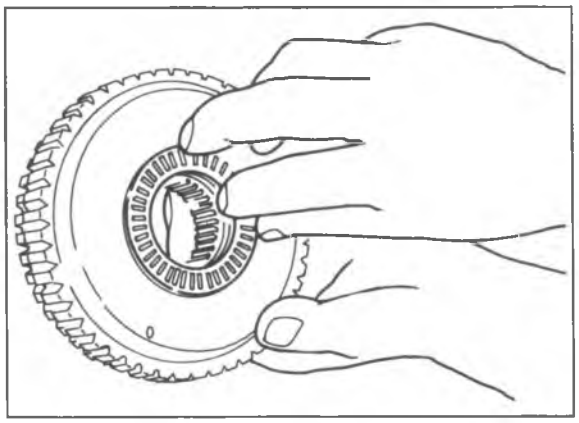

86U07B-230

3. Apply petroleum jelly to the thrust bearing to secure it; then install it to the one-way clutch inner race.

Thrust bearing outer diameter:
62.1 mm (2.44 in)

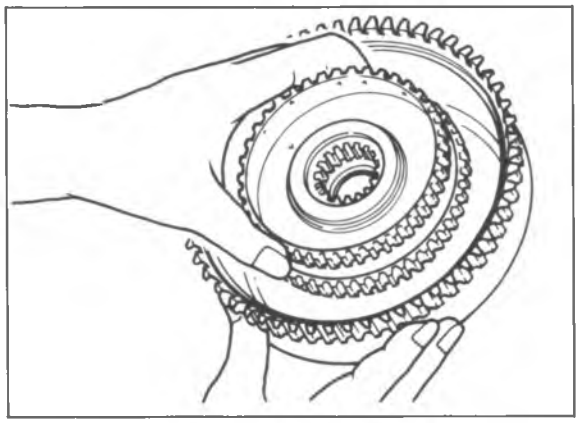

86U07B-231

4. Install the one-way clutch inner and outer race to the sun gear drum.

Note
Align the splines of the one-way clutch inner race and small sun gear clutch hub.

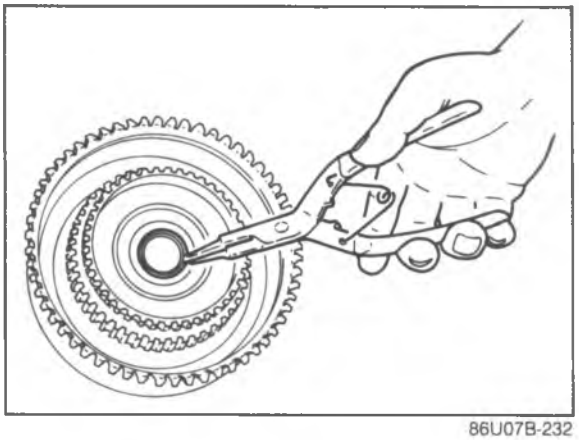

86U07B-232

5. Install the snap ring.

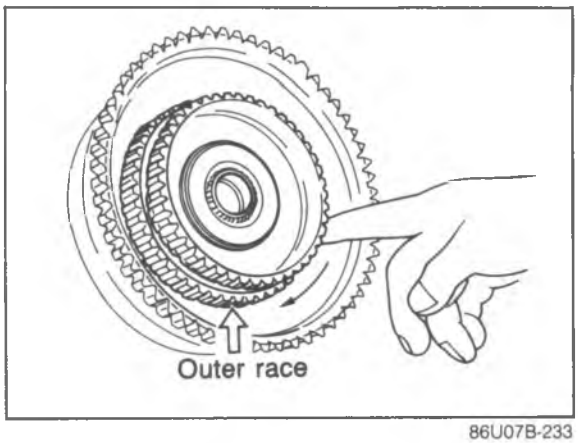

86U07B-233

6. Check that when the small sun gear is held, the one-way clutch outer race turns smoothly and only clockwise.

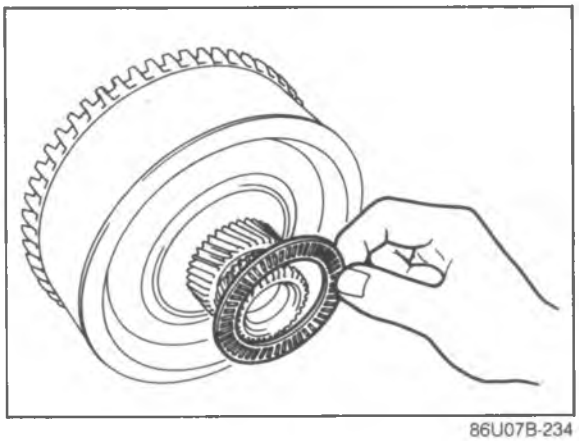

86U07B-234

7. Apply petroleum jelly to the thrust bearing to secure it; then install it to the sun gear drum.

Thrust bearing outer diameter:
72.0 mm (2.83 in)

ONE-WAY CLUTCH AND CARRIER HUB ASSEMBLY

Disassembly

Disassemble in the sequence shown in the figure.

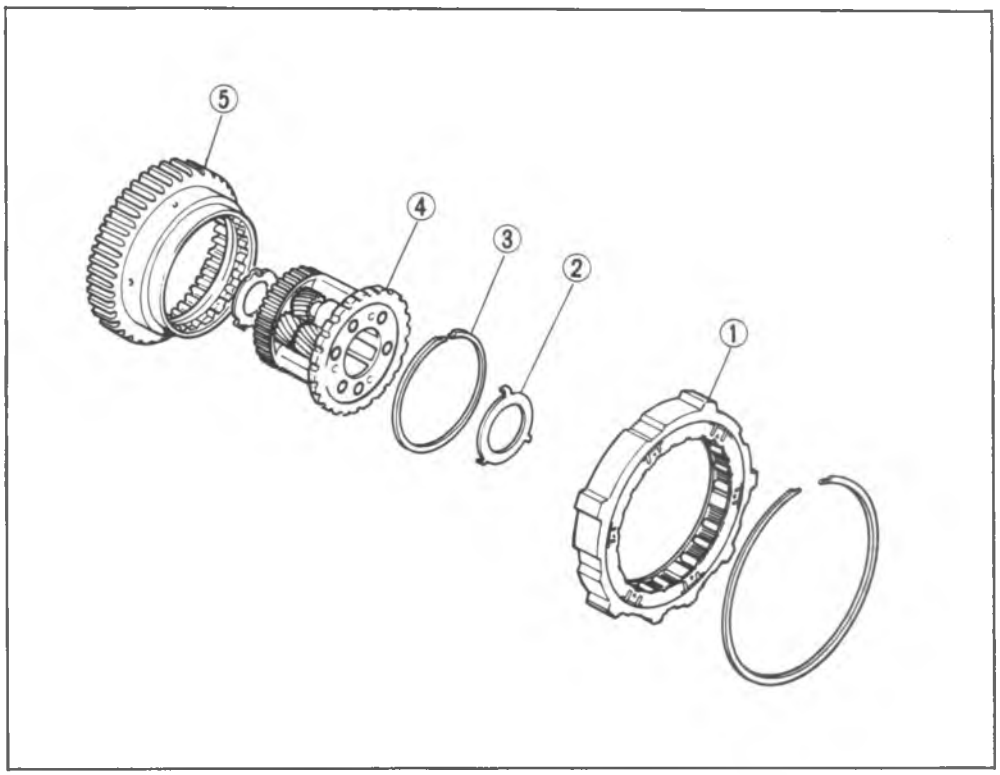

86U07B-235

1. One-way clutch
2. Bearing races
3. Snap ring
4. Carrier hub assembly
5. Inner race (Low and reverse hub)

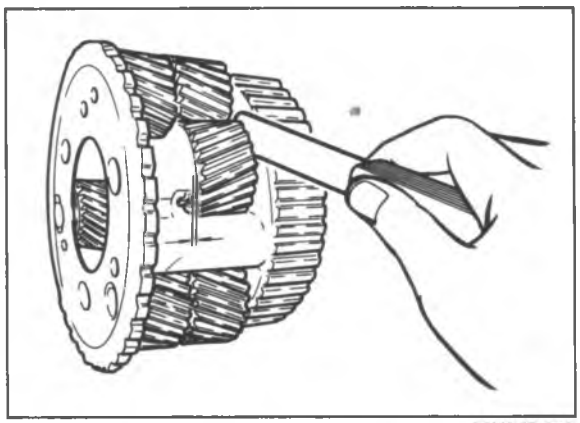

86U07B-236

Inspection

Check the following and replace any faulty parts.

1. Damaged or worn gear and operation
2. Clearance between pinion washer and planetary carrier

Clearance:
0.2—0.7 mm (0.008—0.028 in)

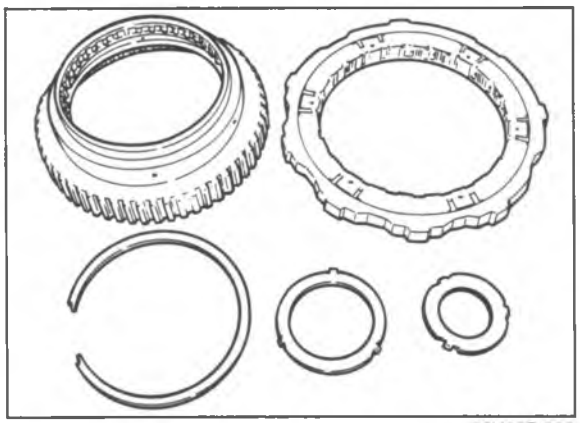

86U07B-237

3. Damaged or worn inner race
4. Broken or worn snap ring
5. Damaged or worn bearing race

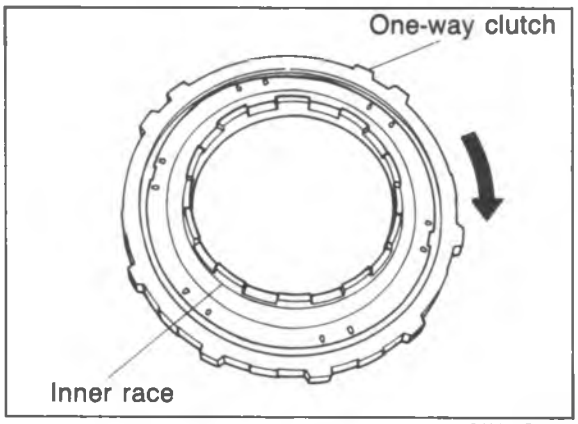

86U07B-238

6. Damaged or worn one-way clutch and operation
7. Detached roller

Note
Assemble the one-way clutch and the inner race, then confirm that the one-way clutch rotates only clockwise and smoothly.

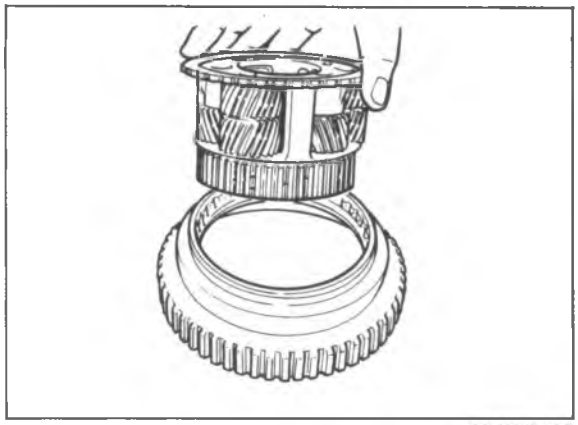
86U07B-239

Assembly
1. Assemble the carrier hub assembly to the inner race.

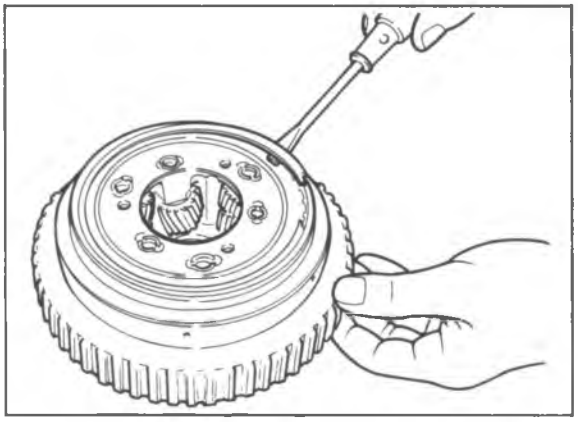
86U07B-240

2. Install th snap ring.

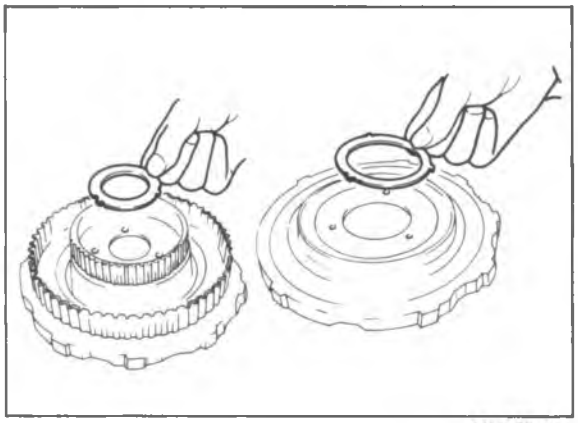
86U07B-241

3. Apply petroleum jelly to the bearing races to secure them; then install them to both sides of the one-way clutch and carrier hub assembly.

Bearing race outer diameter
Sun gear drum side: 72.0 mm (2.83 in)
3-4 clutch side: 57.0 mm (2.21 in)

Note
Install the tabs of the bearing race into the alignment holes.

3-4 CLUTCH
Disassembly

Disassemble in the sequence shown in the figure referring to the disassembly note for the specially marked part.

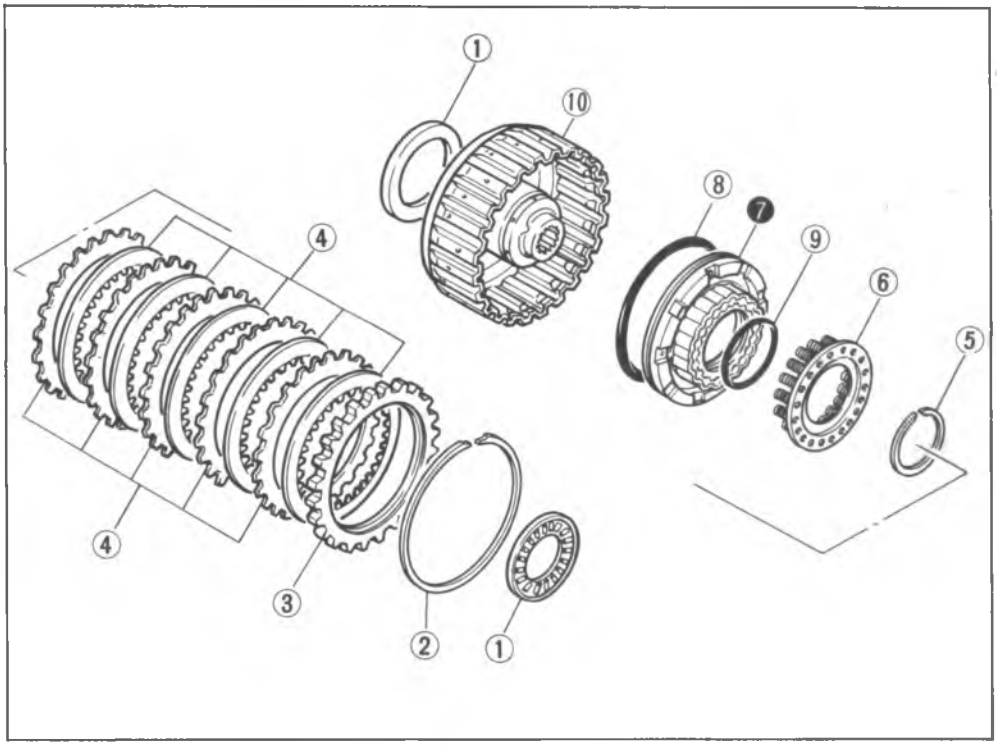

1. Thrust bearings
2. Snap ring
3. Retaining plate
4. Drive and driven plates
5. Snap ring
6. Spring and retainer assembly
7. 3-4 clutch piston
8. Outer seal
9. Inner seal
10. 3-4 clutch drum

86U07B-242

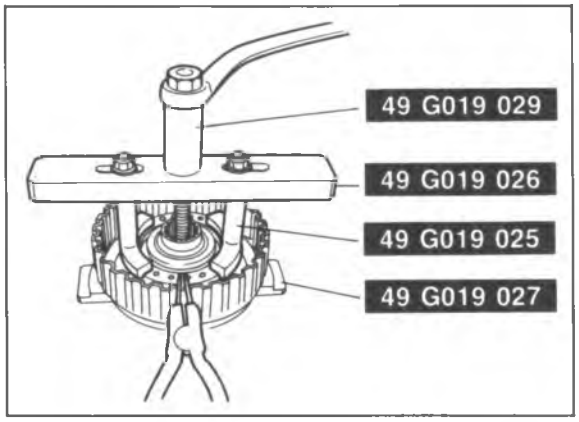

86U07B-243

Disassembly note
3-4 clutch piston

1. Install the **SST** to the 3-4 clutch as shown.
2. Compress the spring and retainer assembly.
3. Remove the snap ring.
4. Remove the **SST** then remove the spring and retainer assembly.

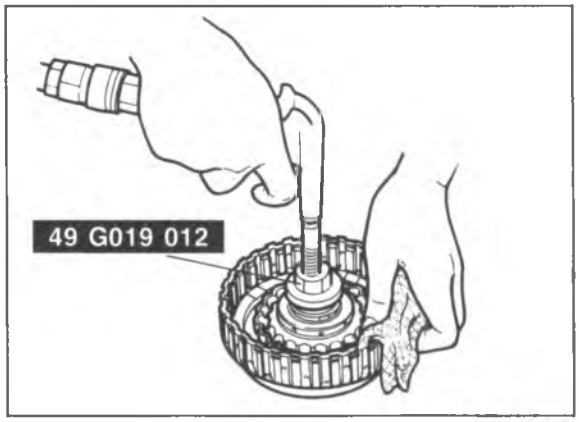

86U07B-244

5. Remove the 3-4 clutch piston with the **SST** and compressed air.

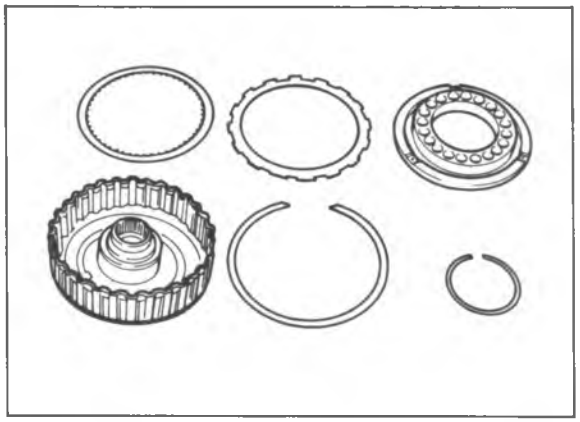

86U07B-245

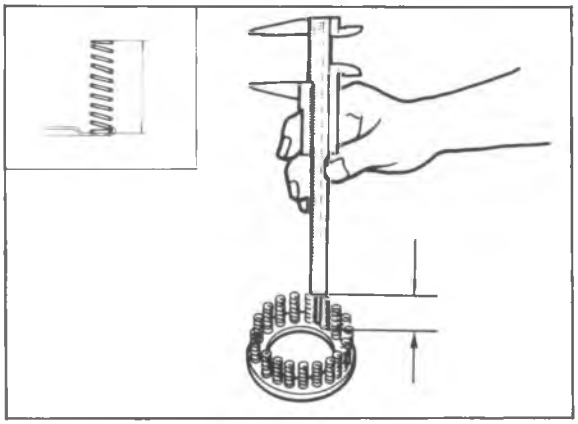

86U07B-246

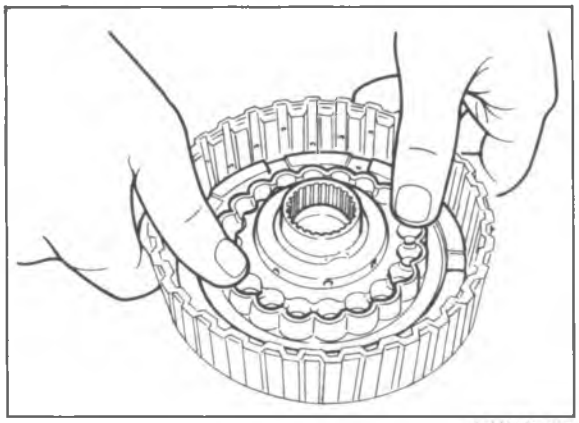

86U07B-247

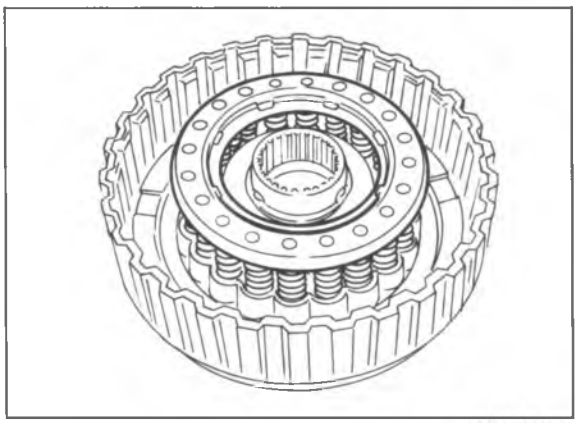

86U07B-248

Inspection

Check the following and repair or replace any faulty parts.

1. Drive and driven plates for damage or wear

   Drive plate thickness
   Standard: 1.6 mm (0.063 in)
   Minimum: 1.4 mm (0.055 in)

2. Clutch piston for damage or cracks
3. Clutch drum for damage or deformation
4. Seal contact areas for damage
5. Check ball for leaking or sticking
6. Spring and retainer assembly for separation or deformation
7. Broken or worn snap ring
8. Broken or weakened spring

   Free length of spring:
   33.2 mm (1.307 in)

Assembly

1. Install the 3-4 clutch piston.
   (1) Apply ATF to the inner and outer seals, and install them onto the 3-4 clutch piston.
   (2) Install the piston by pushing evenly around the circumference, being careful not to damage the seal rings.

2. Install the spring and retainer assembly.

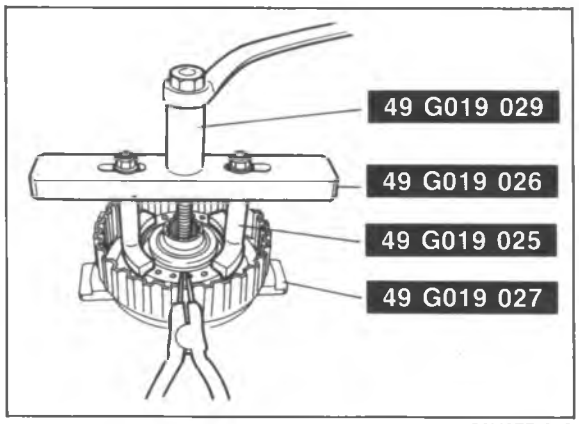

86U07B-249

3. Install the **SST** to the 3-4 clutch as shown.
4. Compress the spring and retainer assembly.
5. Install the snap ring.
6. Remove the **SST**.

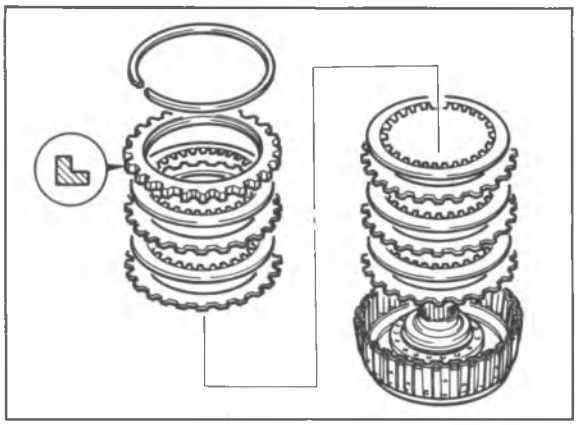
86U07B-250

7. Install the drive and driven plates.

Note
Installation order:
Driven-Drive-Driven-Drive-Driven-Drive-Driven-Drive-Driven-Drive

8. Install the retaining plate with the step facing upward.
9. Install the snap ring.

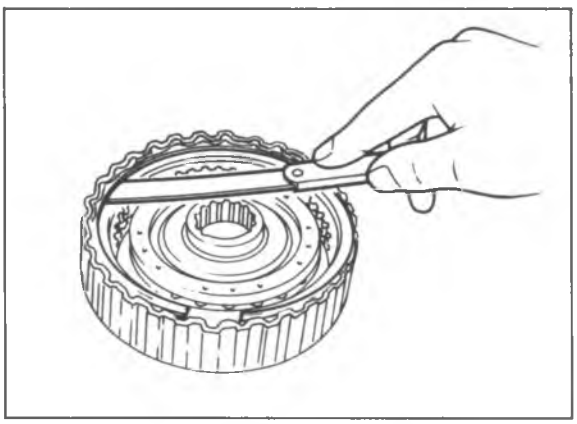
86U07B-251

10. Check the 3-4 clutch clearance.
    (1) Measure the clearance between the snap ring and the retaining plate of the 3-4 clutch.
    (2) If the clearance is not within specification, adjust it by selecting a proper retaining plate.

3-4 clutch clearance:
1.3—1.5 mm (0.051—0.059 in)

Retaining plate sizes mm (in)

3.8 (0.150)	4.0 (0.157)	4.2 (0.165)
4.4 (0.173)	4.6 (0.181)	4.8 (0.189)

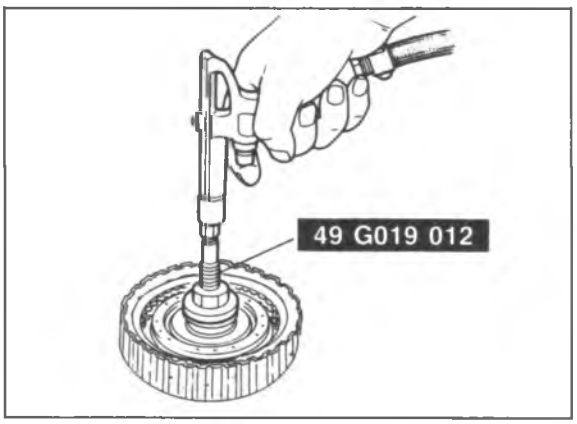

86U07B-252

11. Check clutch operation as follows:
    (1) Install the **SST** as shown, and check clutch operation by applying compressed air.

Air pressure:
392 kPa (4.0 kg/cm^2, 57 psi)

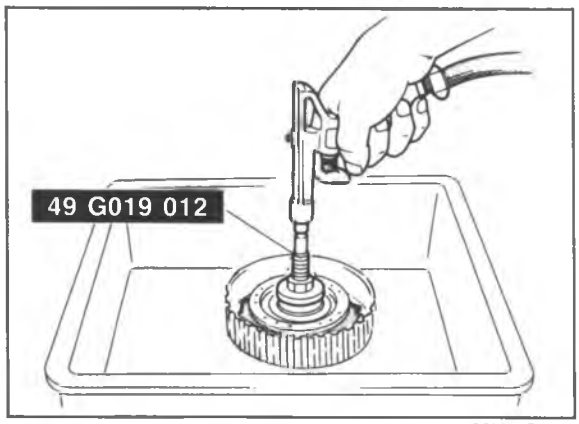

86U07B-253

(2) Pour ATF into the clutch drum so that the 3-4 clutch piston is fully submerged.
(3) Check that no bubbles come from the 3-4 clutch piston seal while applying compressed air.

Caution
The compressed air must be under 392 kPa (4.0 kg/cm^2, 57 psi) and not applied for over 3 seconds.

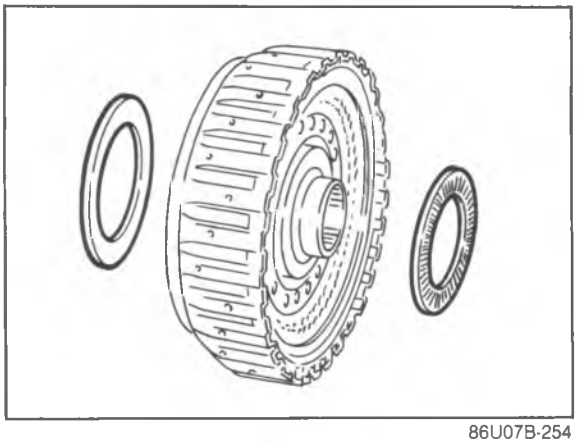

86U07B-254

12. Apply petroleum jelly to the thrust bearings and secure them to both sides of the 3-4 clutch drum.

Thrust bearing outer diameter
Carrier hub side: 56.1 mm (2.21 in)
Output shell side: 72.1 mm (2.84 in)

2-3 ACCUMULATOR

Disassembly

Disassemble in the sequence shown in the figure.

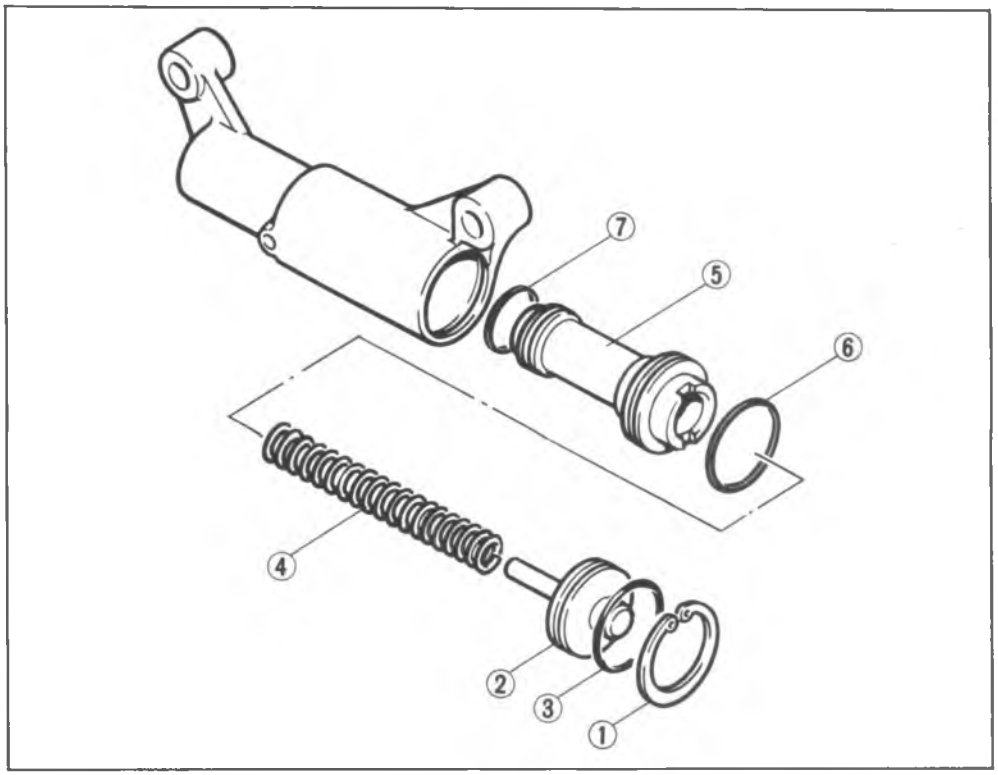

1. Snap ring
2. Stopper plug
3. O-ring
4. 2-3 accumulator spring
5. 2-3 accumulator piston
6. Large seal ring
7. Small sea ring

86U07B-255

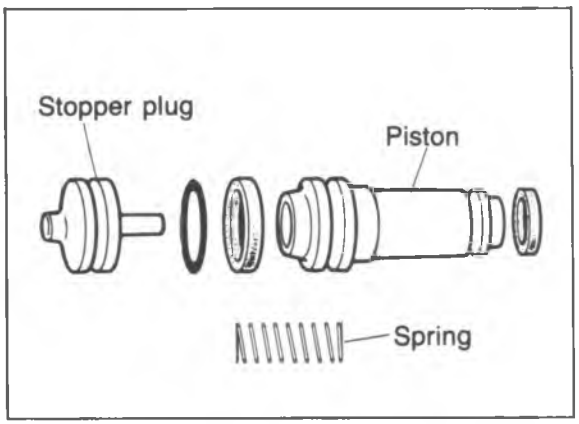

86U07B-256

Inspection

Check the following and replace any faulty parts.

1. Damaged or worn piston
2. Damaged or worn stopper plug
3. Broken or weakened spring

Free length of spring:
Non-Turbo 83.3 mm (3.280 in)
Turbo 75.4 mm (2.968 in)

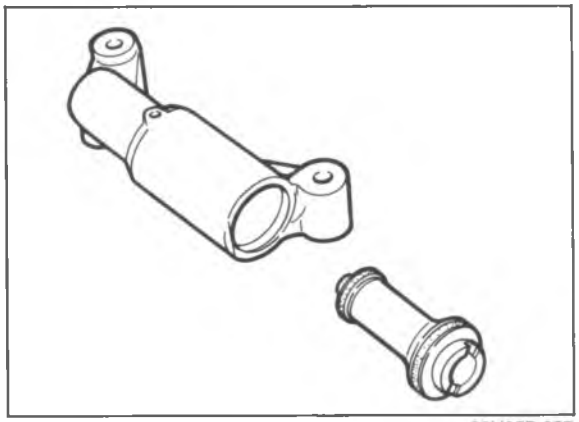

86U07B-257

Assembly

1. Install the 2-3 accumulator.
   (1) Apply ATF to large and small seal rings; then install them to the accumulator piston.
   (2) Insert the 2-3 accumulator.

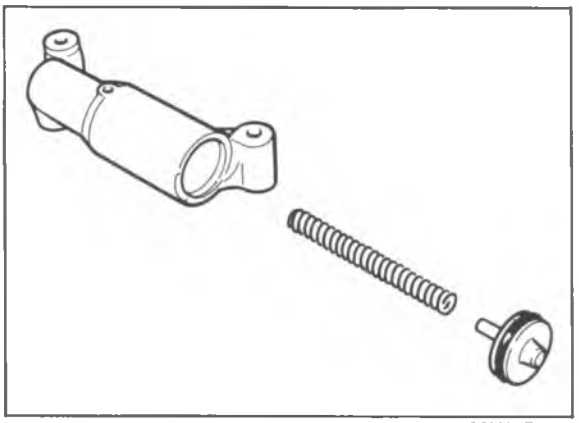

86U07B-258

2. Install the spring to the piston.
3. Install the stopper plug.
   (1) Apply ATF to O-ring, and install it onto the stopper plug.
   (2) Install the stopper plug.

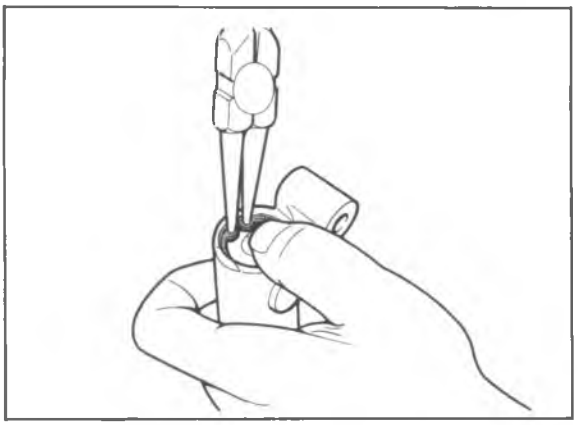

86U07B-259

4. Install the snap ring while holding in the stopper plug.

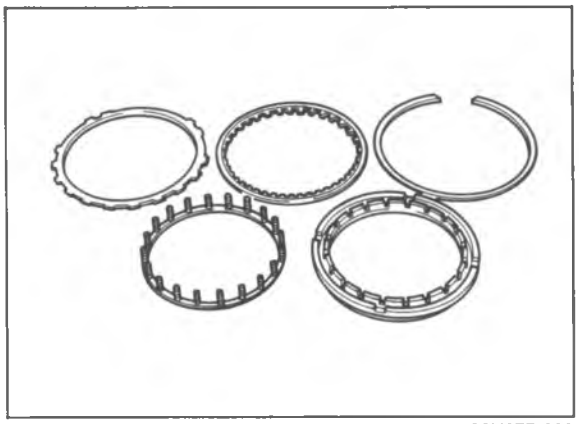

86U07B-260

LOW AND REVERSE BRAKE

Inspection

Check the following and replace any faulty parts.

1. Damaged or worn drive and driven plates

   Drive plate thickness
   Standard: 1.6 mm (0.063 in)
   Minimum: 1.4 mm (0.055 in)

2. Broken or worn snap ring
3. Deformed or detached spring and retainer assembly
4. Broken or weakened spring

   Free length of spring:
   20.5 mm (0.807 in)

5. Damaged or worn piston
6. Damaged seal contact area of transaxle case

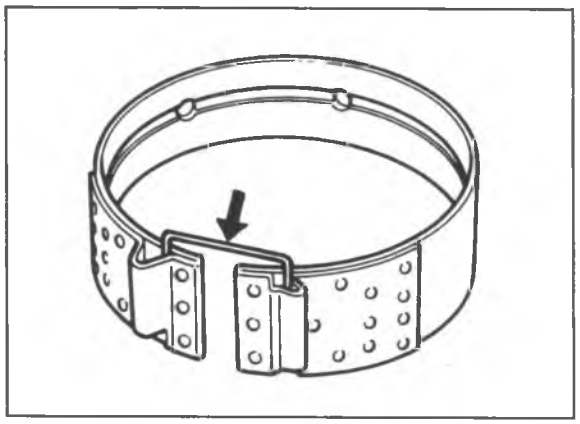

86U07B-261

2-4 BRAKE BAND

Inspection

Check the following and replace if necessary.

1. Damaged or worn 2-4 brake band

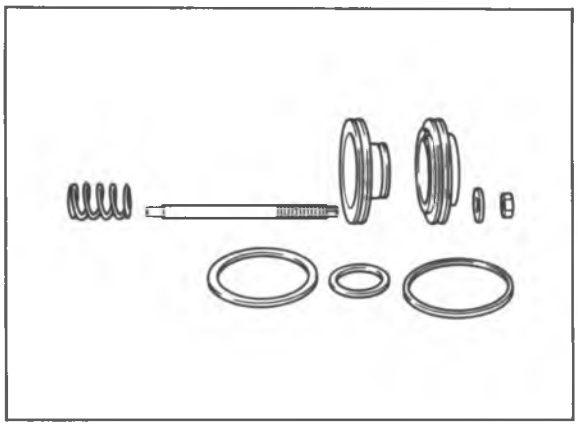

86U07B-262

BAND SERVO

Inspection

Check the following and replace any faulty parts.

1. Damaged or worn piston
2. Weakened return spring

Free length of spring:

Non-Turbo	**43.25 mm (1.703 in)**
Turbo	**42.0 mm (1.654 in)**

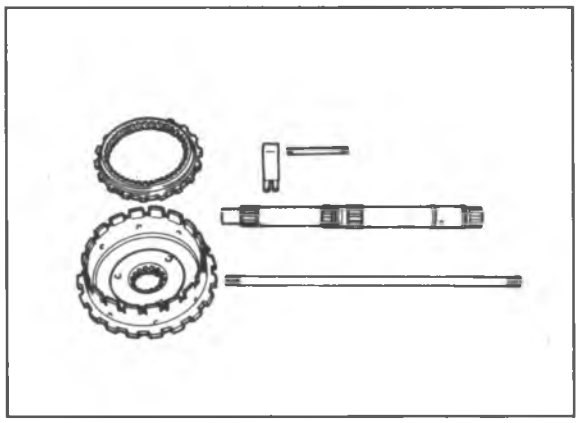

86U07B-263

OTHER INSPECTION

Check the following and replace any faulty parts.

1. Damaged or worn output shell
2. Damaged or worn internal gear
3. Damaged or worn turbine shaft
4. Damaged or worn oil pump shaft
5. Damaged or worn anchor strut and shaft

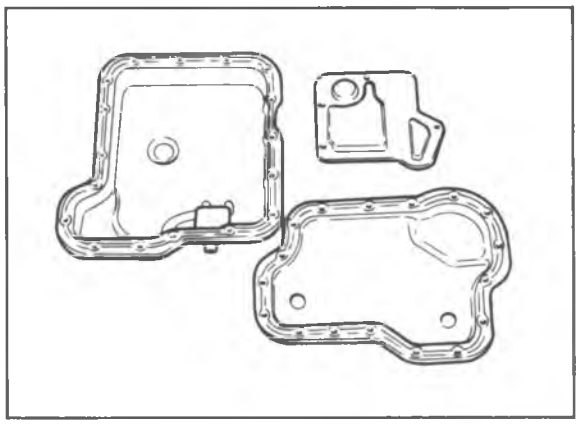

86U07B-264

6. Damaged or cracked valve body cover
7. Damaged or cracked oil pan
8. Damaged or clogged oil strainer

CONTROL VALVE BODY

Precaution

(1) Pay close attention when handling the control valve because it consists of the most precise and delicate parts of the transaxle.
(2) Neatly arrange the removed parts in order to avoid mixing up similar parts.
(3) Disassemble the control valve assembly and thoroughly clean it when the clutch and/or brake bands are burned, and/or when the automatic transmission fluid is degenerated.

Components I

Front and premain control body

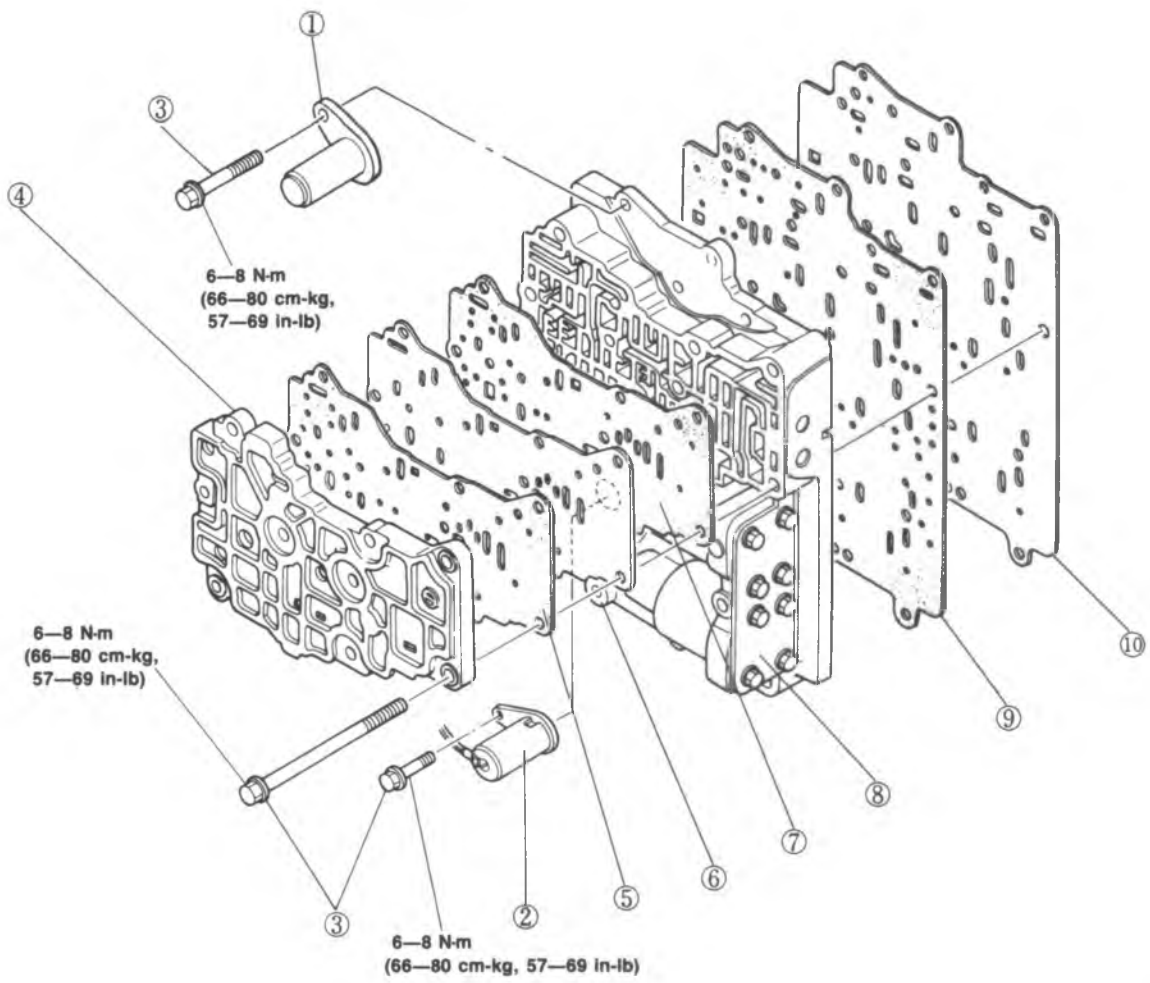

86U07B-265

1. 1-2 Solenoid valve
2. 2-3 Solenoid valve
3. Bolts
4. Front control body
5. Front/premain front gasket
6. Premain separator
7. Front/premain rear gasket
8. Premain control body
9. Premain/main front gasket
10. Main separator

Components II

Main and rear control body

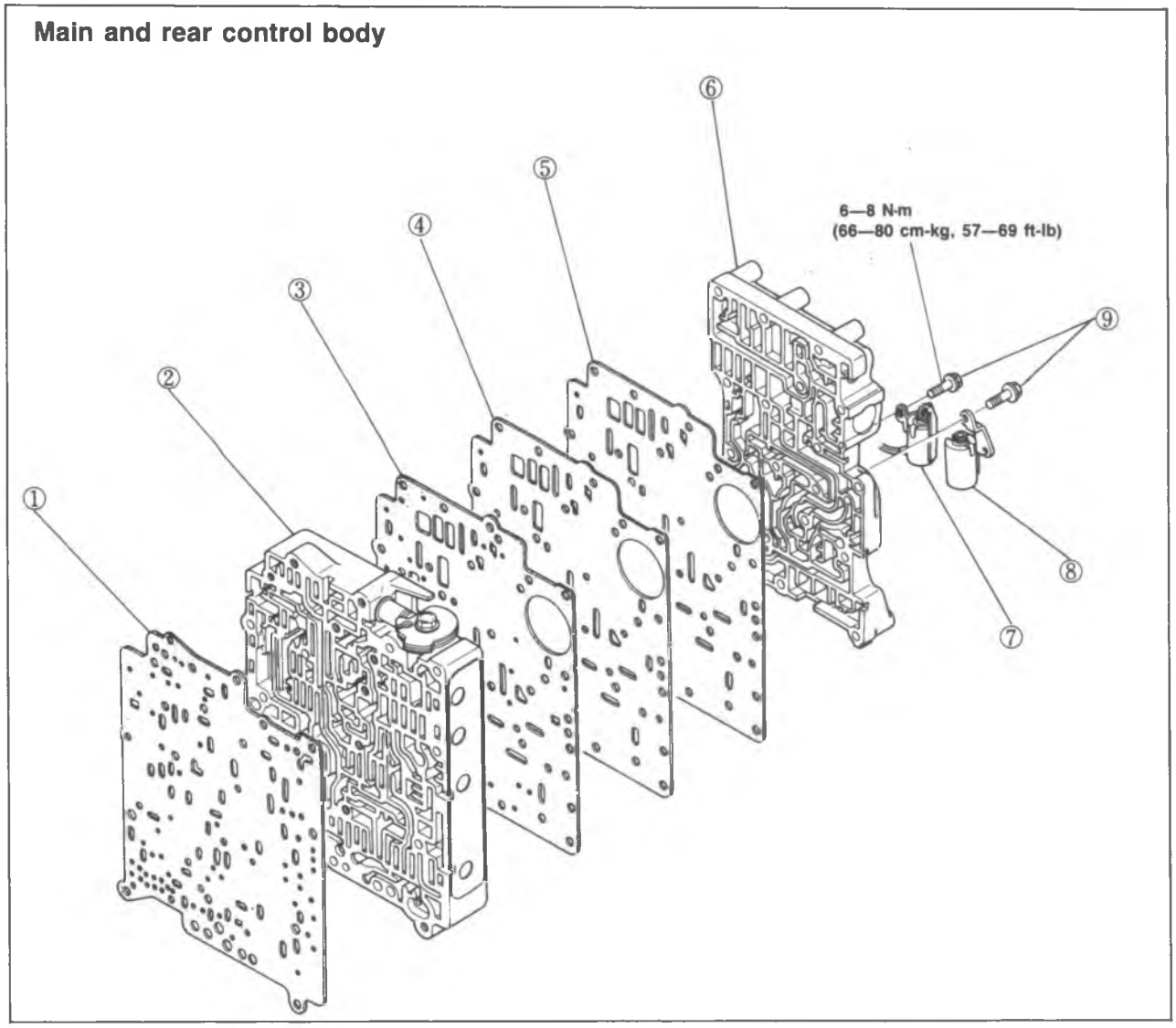

86U07B-266

1. Premain/main rear gasket
2. Main control body
3. Main/rear front gasket
4. Rear separator
5. Main/rear rear gasket
6. Rear control body
7. 3-4 solenoid valve
8. Lock-up solenoid valve
9. Bolts

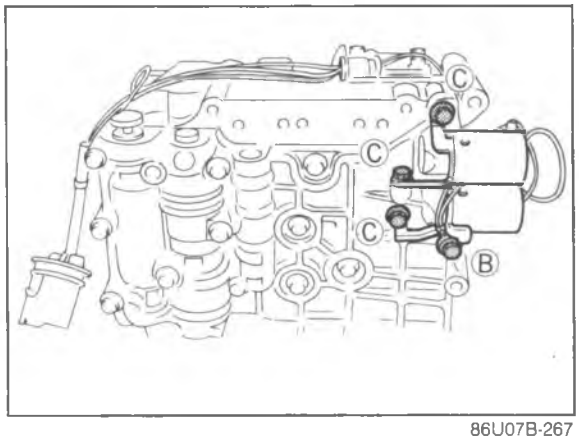

86U07B-267

Disassembly of Control Valve Body

1. Remove the 3-4 solenoid valve and lock-up solenoid valve.
2. Remove the O-rings and oil strainers.

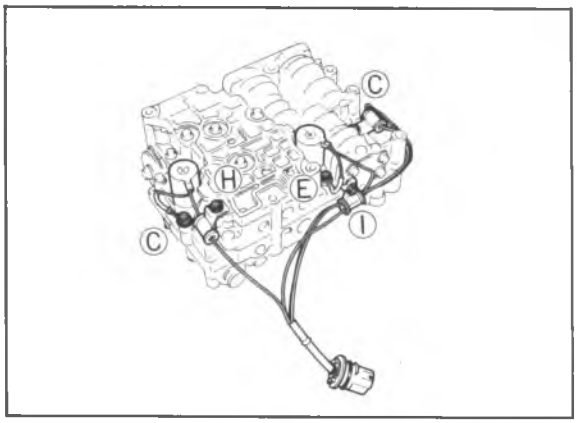

86U07B-268

3. Remove the 1-2 solenoid valve and 2-3 solenoid valve and wire harness.
4. Remove the O-rings and oil strainers.

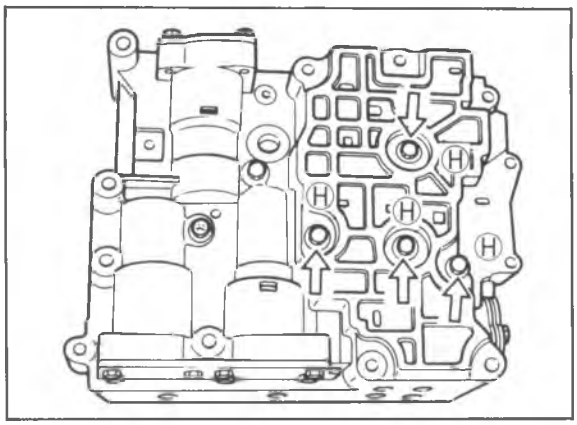

86U07B-269

5. Remove the front indicated bolts and pull out the front control body with premain separator as a unit.

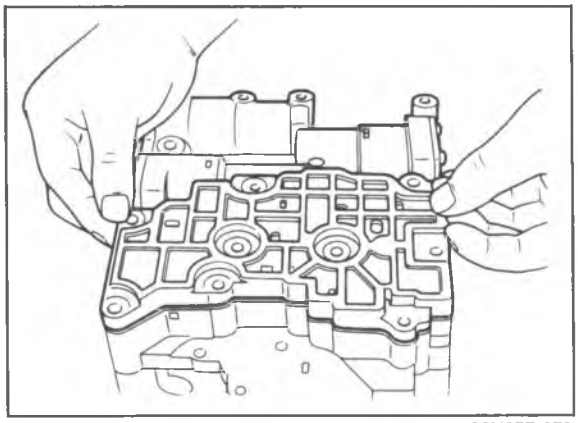

86U07B-270

6. Remove the front/premain gaskets and separator from the front control body.

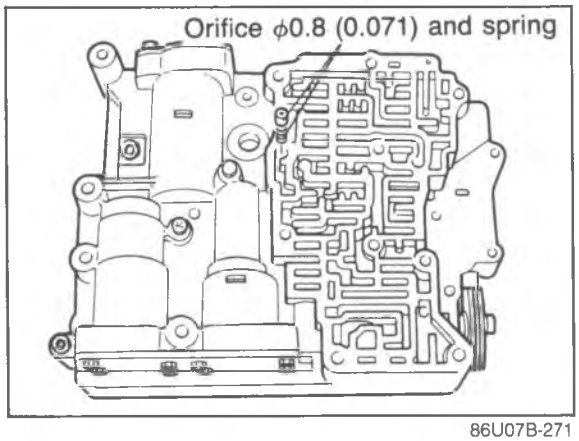

86U07B-271

7. Remove the orifice check valve (ϕ0.8 mm, 0.071 in) and spring from the premain control body.

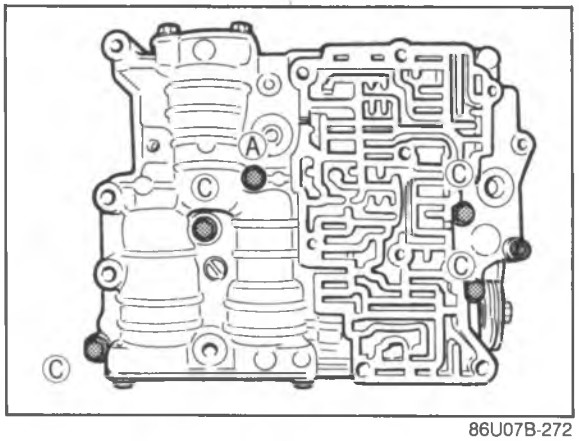

86U07B-272

8. Remove the bolts and hexagonal head bolt and remove the premain control body and the main separator as a unit.

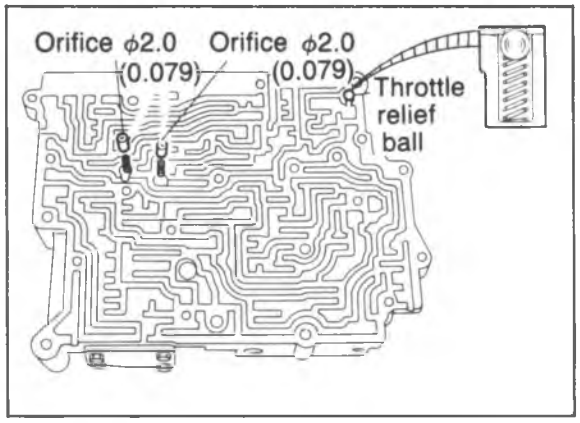

86U07B-273

9. Remove the premain/main gaskets and separator from the premain control body.
10. Remove the orifice check valves (ϕ2.0 mm, 0.079 in) and springs, and the throttle relief ball and spring from the premain control body.

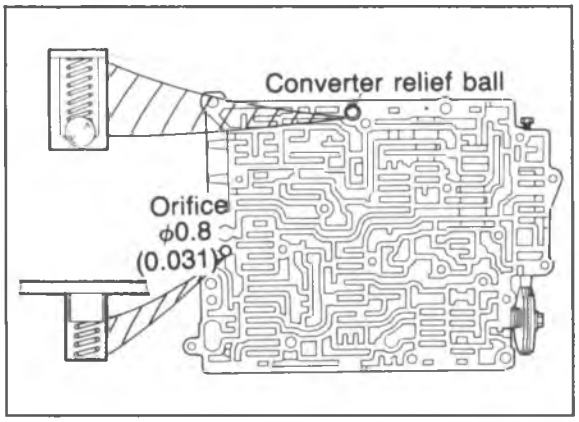

86U07B-274

11. Remove the converter relief ball and spring, and the orifice check valve (ϕ0.8 mm, 0.031 in) and spring from the main control body.

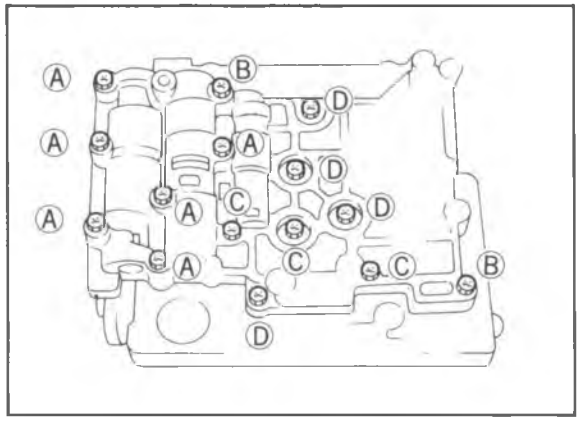

86U07B-275

12. Turn the assembly over and remove the bolts shown in the figure. Remove the rear separator as a unit.

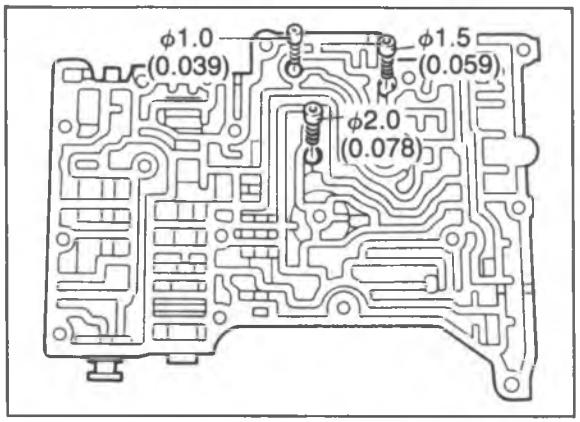

86U07B-276

13. Remove the main/rear gaskets and separator from the rear control body.
14. Remove the orifice check valves (ϕ1.5 mm, 0.059 in; ϕ1.0 mm, 0.039 in; ϕ2.0 mm, 0.079 in) and spring from the rear control body.

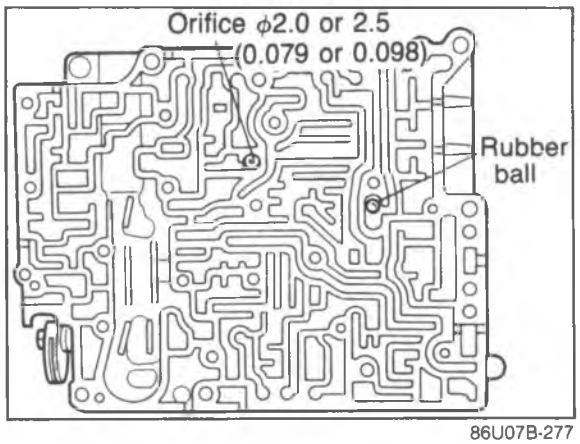

86U07B-277

15. Remove the orifice check valve (Non-Turbo: ϕ2.5 mm, 0.098 in, Turbo: ϕ2.0 mm, 0.079 in) and spring and the rubber ball from the main control body.

Premain Control Body
Disassembly
Disassemble in the sequence shown in the figure.

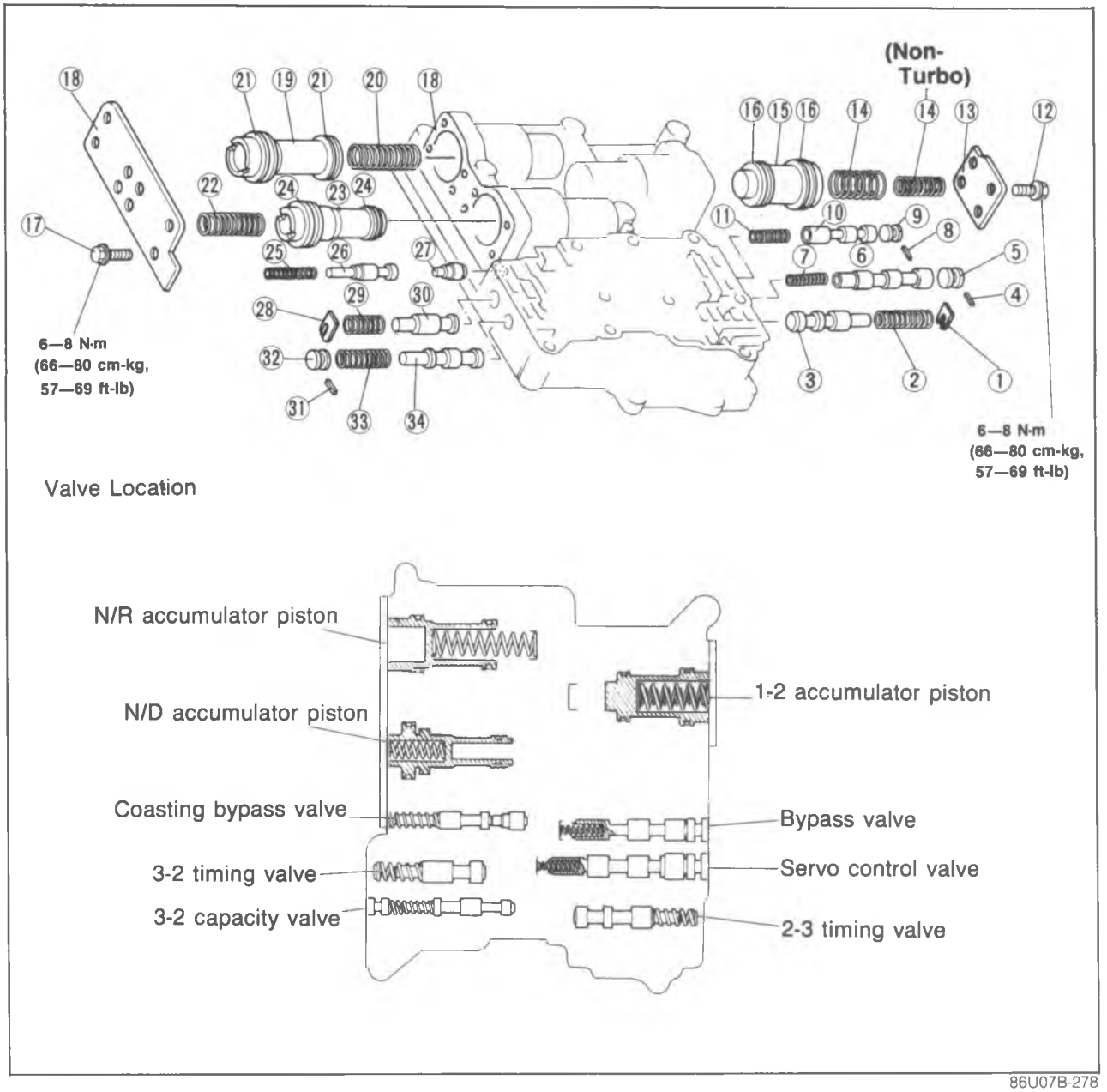

86U07B-278

1. Retainer
2. 2-3 timing spring
3. 2-3 timing valve
4. Stopper pin
5. Stopper plug
6. Servo control valve
7. Servo control spring
8. Stopper pin
9. Stopper plug
10. Bypass valve
11. Bypass spring
12. Bolt
13. 1-2 accumulator plate and gasket
14. 1-2 accumulator spring
15. 1-2 accumulator piston
16. 1-2 accumulator seal rings
17. Bolt
18. N/R accumulator plate and gasket
19. N/R accumulator piston
20. N/R accumulator rear spring
21. N/R accumulator seal rings
22. N/D accumulator front spring
23. N/D accumulator piston
24. N/D accumulator seal rings
25. Coasting bypass spring
26. Coasting bypass valve
27. Coasting bypass plug
28. Retainer
29. 3-2 timing spring
30. 3-2 timing valve
31. Stopper pin
32. Stopper plug
33. 3-2 capacity spring
34. 3-2 capacity valve

Inspection

Check the following and replace any faulty parts.
1. Damaged or worn valves
2. Damaged oil passage
3. Cracked or damaged valve body
4. Operation of each valve
5. Weakened spring

Spring

Spring name		Outer dia. mm (in)	Free length mm (in)	Wire dia. mm (in)	Spring color
1-2 accumulator small spring	Non-Turbo	10.8 (0.425)	96.1 (3.788)	1.3 (0.051)	Red
1-2 accumulator large spring	Non-Turbo	16.0 (0.630)	87.1 (3.429)	2.1 (0.083)	Red
	Turbo	12.8 (0.504)	83.6 (3.291)	1.7 (0.067)	White
Bypass, Servo control spring	Non-Turbo	5.0 (0.197)	33.4 (1.315)	0.55 (0.022)	Maroon
	Turbo	5.0 (0.197)	37.1 (1.461)	0.55 (0.022)	White
2-3 timing spring		8.3 (0.327)	26.5 (1.043)	0.8 (0.031)	—
N/R accumulator rear spring		11.1 (0.437)	62.0 (2.441)	1.2 (0.047)	Light green
N/D accumulator front spring	Non-Turbo	9.8 (0.386)	52.9 (2.083)	1.0 (0.039)	Brown
	Turbo	9.8 (0.386)	68.0 (2.677)	1.1 (0.043)	Orange
Coasting bypass spring		5.8 (0.228)	37.7 (1.484)	0.6 (0.024)	Dark blue
3-2 timing spring		8.2 (0.323)	28.6 (1.126)	0.8 (0.031)	Red
3-2 capacity spring		5.4 (0.213)	30.6 (1.205)	0.5 (0.020)	White
Throttle relief ball spring		6.6 (0.260)	21.6 (0.850)	0.8 (0.031)	—

86U07B-279

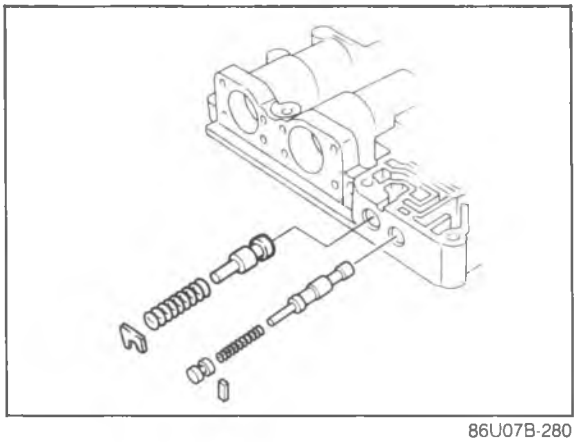

86U07B-280

Assembly

1. Install the 3-2 capacity valve, 3-2 capacity spring, and stopper plug; then install the stopper pin.
2. Install the 3-2 timing valve, the 3-2 timing spring, and retainer.

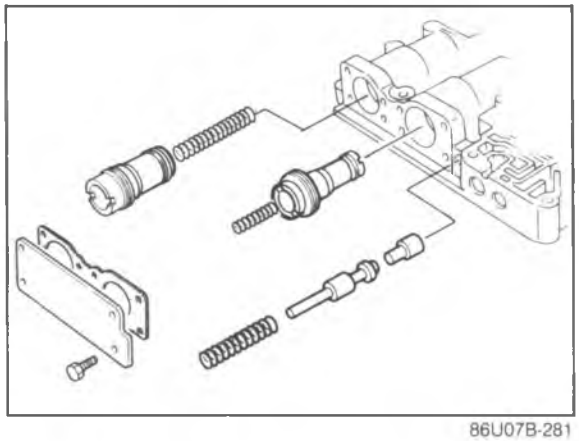

86U07B-281

3. Install the coasting bypass plug, coasting bypass valve and coasting bypass spring.
4. Apply ATF to the O-rings, and install them to the piston; then insert the N/R accumulator rear spring and N/R accumulator piston.
5. Apply ATF to the O-rings, and install them to the piston; then insert the N/D accumulator piston and N/D accumulator front spring.

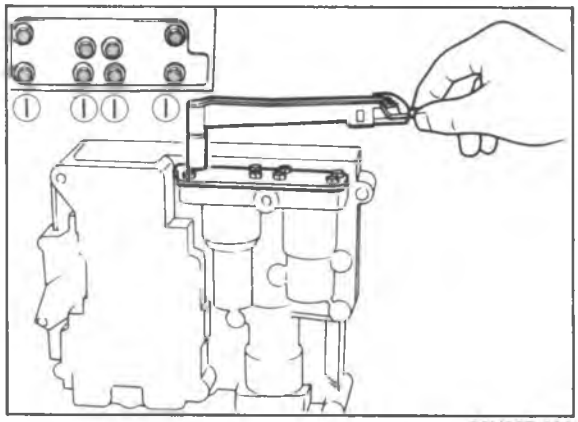

86U07B-282

6. Install the N/R accumulator gasket and plate; then tighten the plate.

Tightening torque:
6—8 N·m (66—80 cm-kg, 57—69 in-lb)

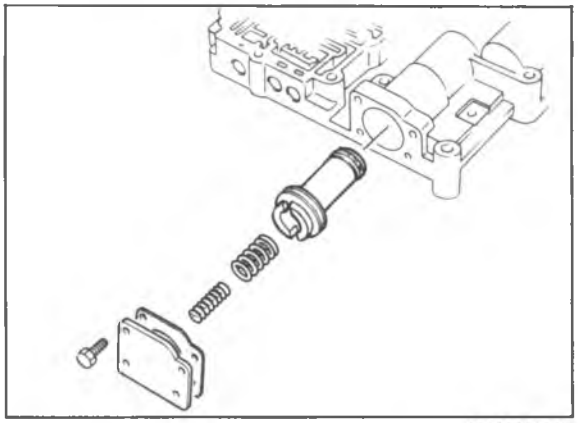

86U07B-283

7. Apply ATF to the O-rings, and install them onto the piston; then install the 1-2 accumulator piston and 1-2 accumulator springs.

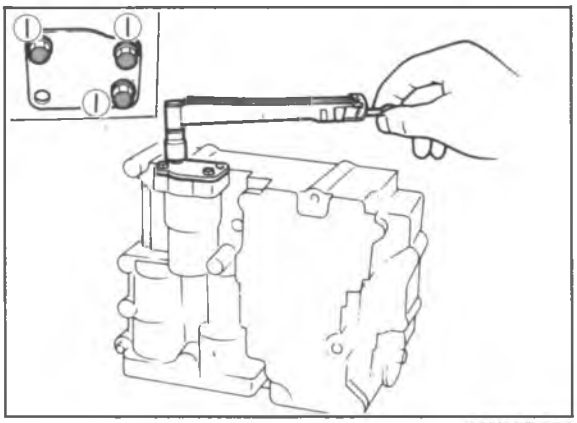

86U07B-284

8. Install the 1-2 accumulator gasket and plate; then tighten the plate.

Tightening torque:
6—8 N·m (66—80 cm-kg, 57—69 in-lb)

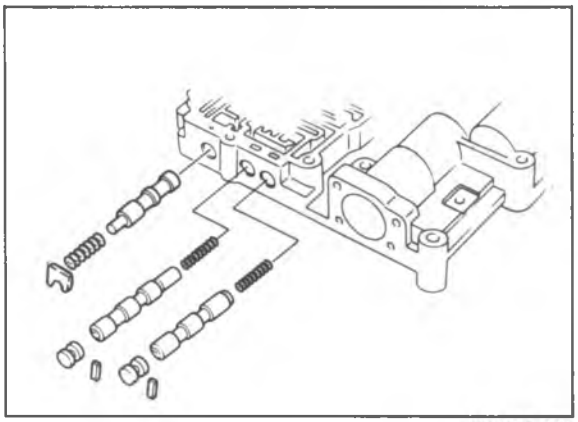

86U07B-285

9. Install the bypass spring, bypass valve, stopper plug, and stopper pin.
10. Install the servo control spring, servo control valve, stopper plug, and stopper pin.
11. Install the 2-3 timing valve, 2-3 timing spring, and retainer.

Main Control Body
Disassembly
Disassemble in the sequence shown in the figure.

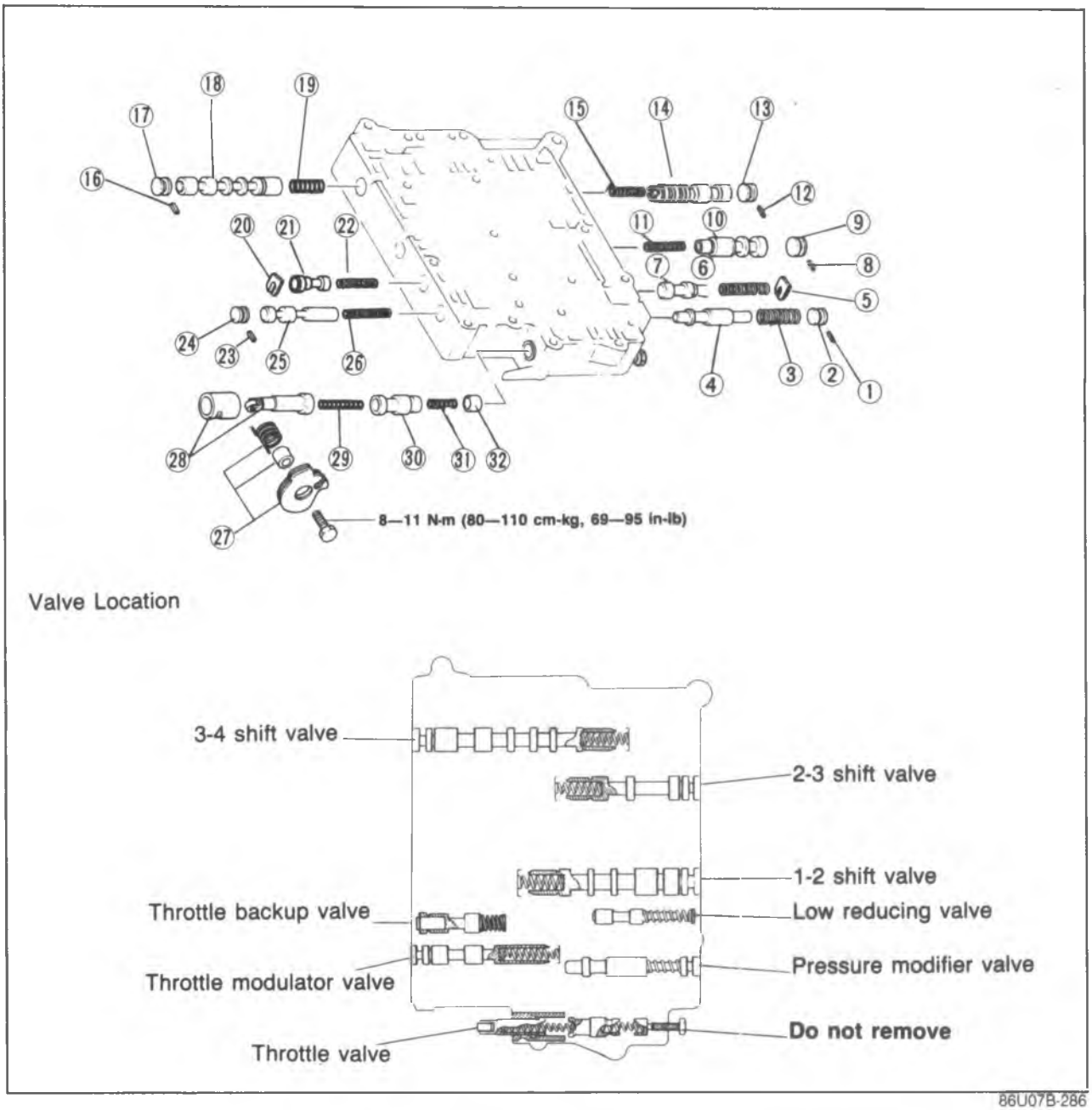

86U07B-286

1. Stopper pin
2. Stopper plug
3. Pressure modifier spring
4. Pressure modifier valve
5. Retainer
6. Low reducing spring
7. Low reducing valve
8. Stopper pin
9. Stopper plug
10. 1-2 shift valve
11. 1-2 shift spring
12. Stopper pin
13. Stopper plug
14. 2-3 shift valve
15. 2-3 shift spring
16. Stopper pin
17. Stopper plug
18. 3-4 shift valve
19. 3-4 shift spring
20. Retainer
21. Throttle backup valve
22. Throttle backup spring
23. Stopper pin
24. Stopper plug
25. Throttle modulator valve
26. Throttle modulator spring
27. Throttle cam assembly
28. Throttle plug assembly
29. Throttle spring
30. Throttle valve
31. Throttle assist spring
32. Throttle adjust plug

Inspection

Check the following and replace any faulty parts.

1. Damaged or worn valves
2. Damaged oil passage
3. Cracked or damaged valve body
4. Operation of each valve
5. Weakened spring

Spring

Spring name	Outer dia. mm (in)	Free length mm (in)	Wire dia. mm (in)	Spring color
Pressure modifier spring	8.3 (0.327)	26.5 (1.043)	0.8 (0.031)	—
Low reducing spring	8.7 (0.343)	38.3 (1.508)	0.9 (0.035)	Black
1-2 shift spring	8.7 (0.343)	41.3 (1.626)	1.0 (0.039)	Yellow
2-3, 3-4 shift spring	7.4 (0.291)	36.6 (1.441)	0.8 (0.031)	Gray
Throttle backup spring	9.65 (0.380)	29.6 (1.060)	0.55 (0.022)	Red
Throttle modulator spring	6.3 (0.248)	47.9 (1.886)	0.8 (0.031)	—
Throttle assist spring	5.15 (0.203)	32.3 (1.272)	0.55 (0.022)	Dark green
Throttle spring	5.4 (0.213)	47.2 (1.858)	0.8 (0.031)	Pink
Converter relief ball spring	6.9 (0.272)	24.1 (0.949)	0.9 (0.035)	Maroon
Orifice check valve spring	5.0 (0.197)	12.5 (0.492)	0.23 (0.009)	—

86U07B-287

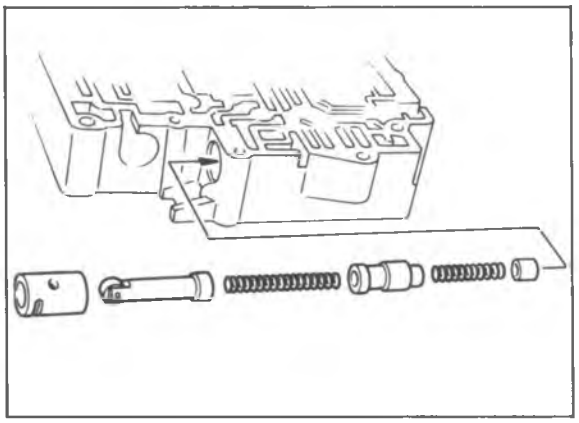

86U07B-288

Assembly

1. Install the throttle adjust plug, throttle assist spring, throttle valve, and throttle plug assembly.

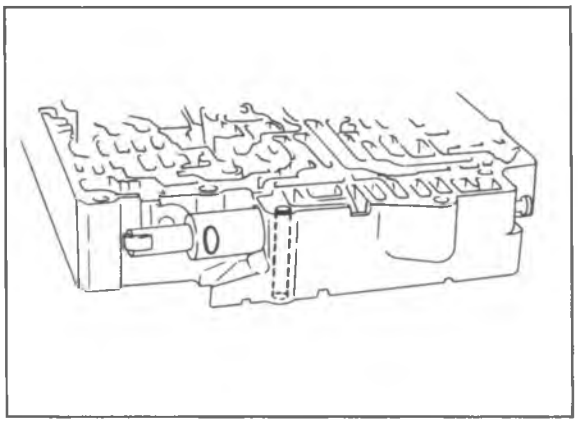

86U07B-289

Caution

Install the throttle plug assembly with the groove aligned with the bolt hole.

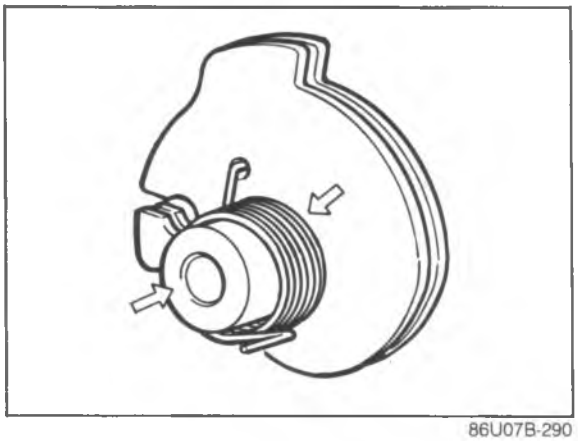

86U07B-290

2. Install the throttle return spring as shown.
3. Install the throttle cam assembly to the main control body.

Tightening torque:
8—11 N·m (80—110 cm-kg, 69—95 in-ib)

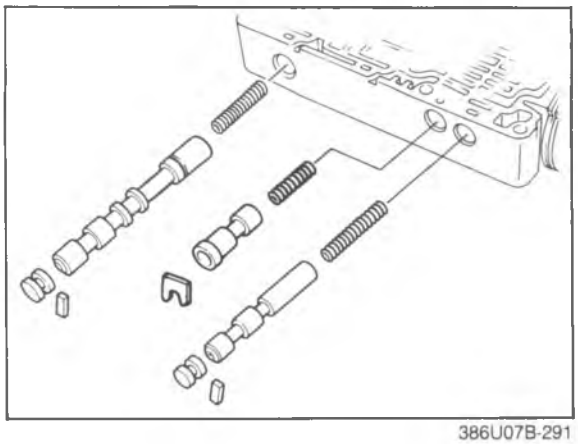

386U07B-291

4. Install the throttle modulator spring, throttle modulator valve, stopper plug, and stopper pin.
5. Install the throttle backup spring, throttle back valve, and retainer.
6. Install the 3-4 shift spring, 3-4 shift valve, stopper plug, and stopper pin.

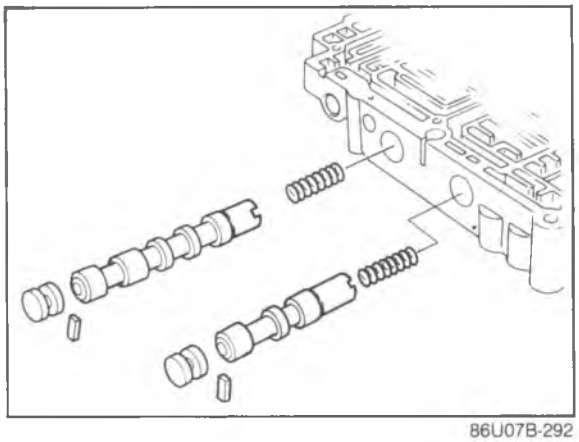

86U07B-292

7. Install the 2-3 shift spring, 2-3 shift valve, stopper plug, and stopper pin.
8. Install the 1-2 shift spring, 1-2 shift valve, stopper plug, and stopper pin.

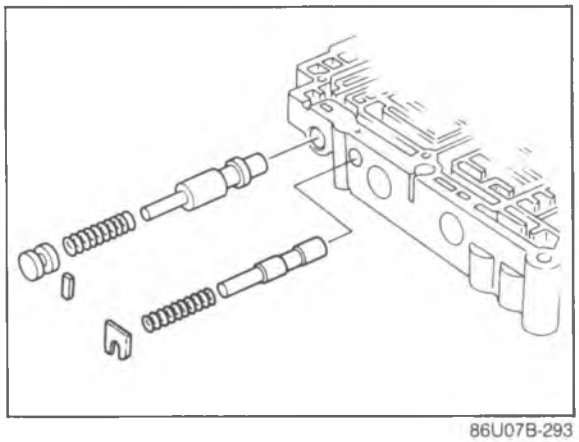

86U07B-293

9. Install the low reducing valve, low reducing spring, and retainer.
10. Install the pressure modifier valve, pressure modifier spring, stopper plug, and stopper pin.

Rear Control Body
Disassembly
Disassemble in the sequence shown in the figure.

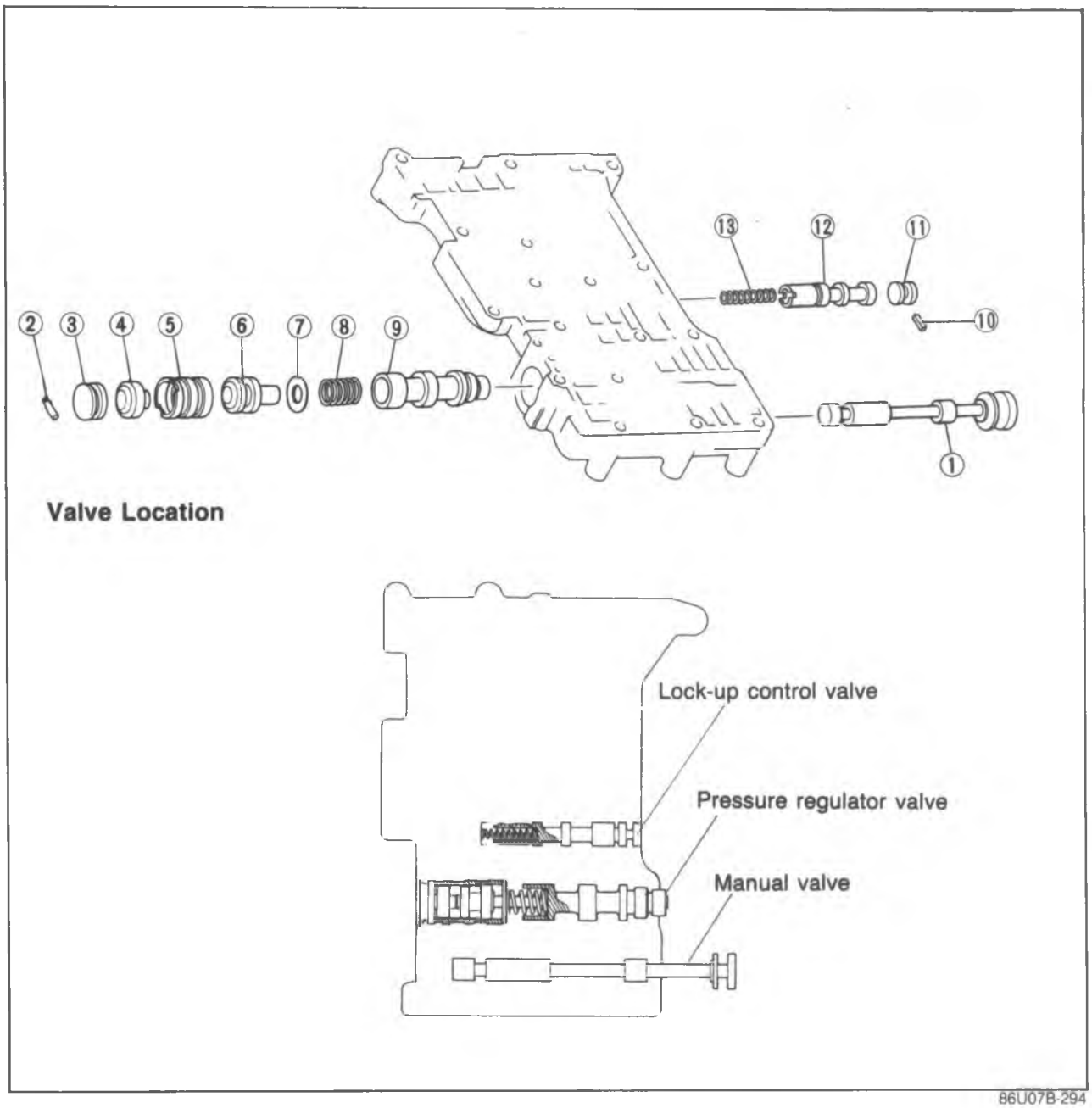

86U07B-294

1. Manual valve
2. Stopper pin
3. Stopper plug
4. Pressure regulator backup plug
5. Pressure regulator plug sleeve
6. Pressure regulator plug
7. Pressure regulator spring seat
8. Pressure regulator spring
9. Pressure regulator valve
10. Stopper pin
11. Stopper plug
12. Lock-up control valve
13. Lock-up control spring

Inspection

Check the following and replace any faulty parts.
1. Damaged or worn valves
2. Damaged oil passage
3. Cracked or damaged valve body
4. Operation of each valve
5. Weakened spring

Spring

Spring name	Outer dia. mm (in)	Free length mm (in)	Wire dia. mm (in)	Spring color
Pressure regulator spring	11.5 (0.453)	26.5 (1.043)	1.0 (0.039)	Maroon
Lock-up control spring	5.0 (0.197)	35.2 (1.386)	0.6 (0.024)	Purple

86U07B-295

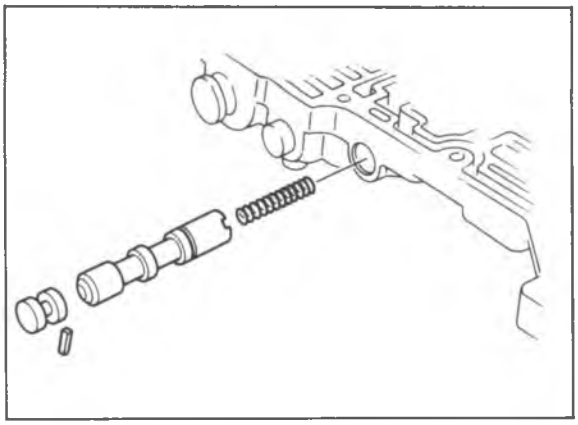

86U07B-296

Assembly

1. Install the lock-up control spring, lock-up control valve, stopper plug, and stopper pin.

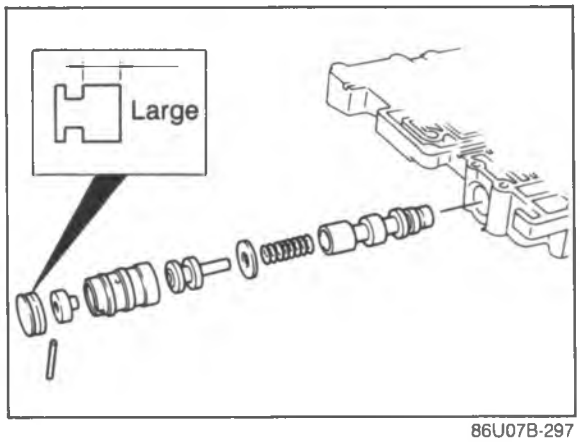

86U07B-297

2. Install the pressure regulator valve, pressure regulator spring, pressure regulator spring seat, pressure regulator plug, pressure regulator plug sleeve, pressure regulator backup plug, stopper plug, and stopper pin.

Note
Install the stopper plug larger end first.

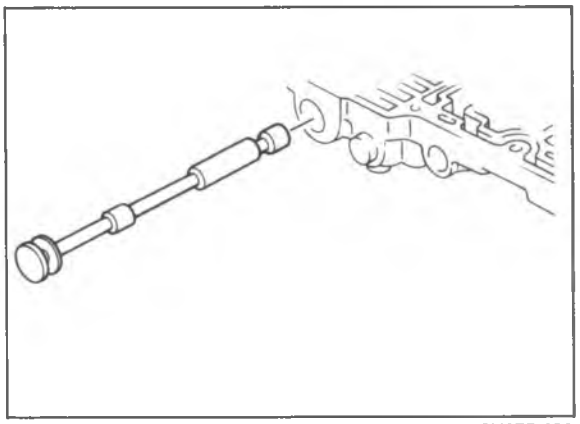

86U07B-298

3. Install the manual valve.

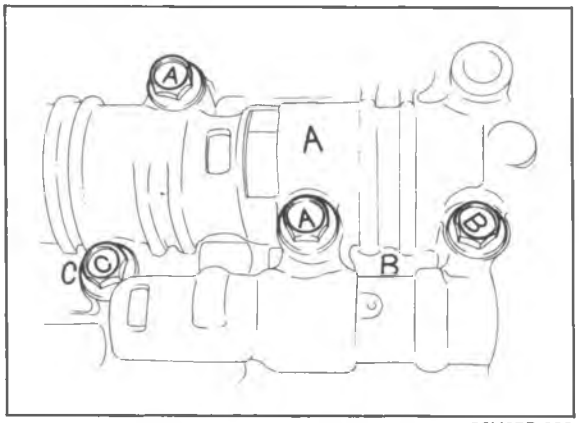

86U07B-299

Assembly of Control Valve Body

Note

a) Do not mix-up the front and rear gaskets during assembly.

b) Match the bolt head letter and the control valve body letter.

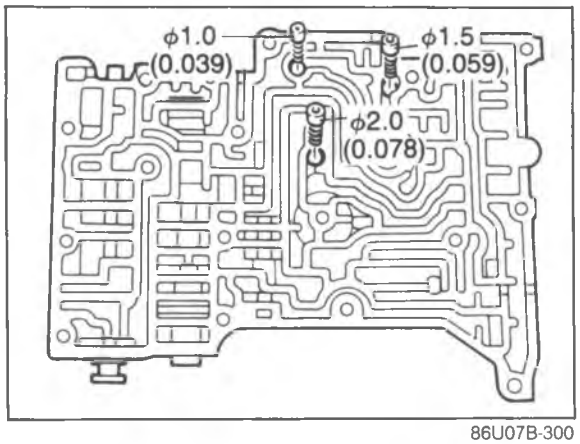

86U07B-300

1. Install the orifice check valves (ϕ1.5 mm, 0.059 in; ϕ1.0 mm, 0.039 in; ϕ2.0 mm, 0.079 in) and springs in the rear control body as shown.

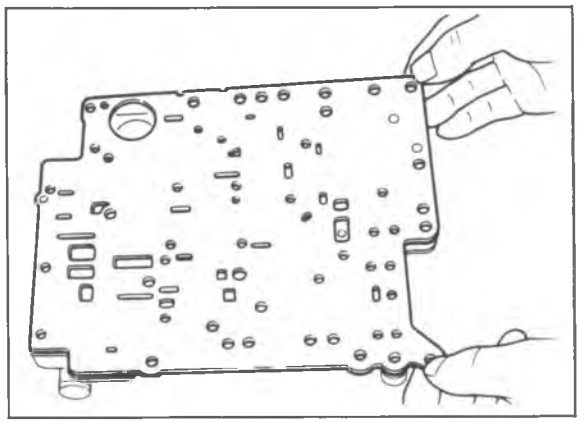

86U07B-301

2. Install the gaskets on both sides of the rear separator; then install it onto the rear control body.

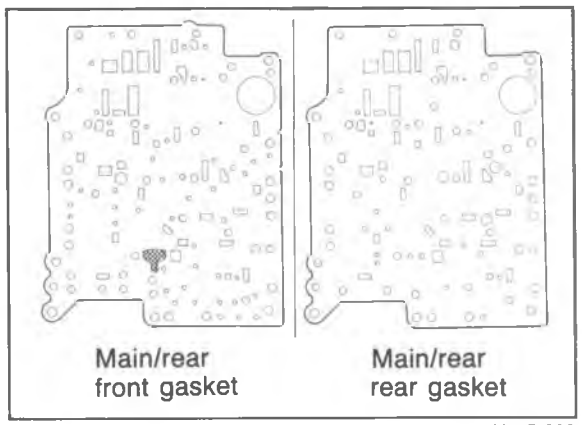

86U07B-302

Note

The main/rear rear gasket and main/rear front gasket are not interchangeable.

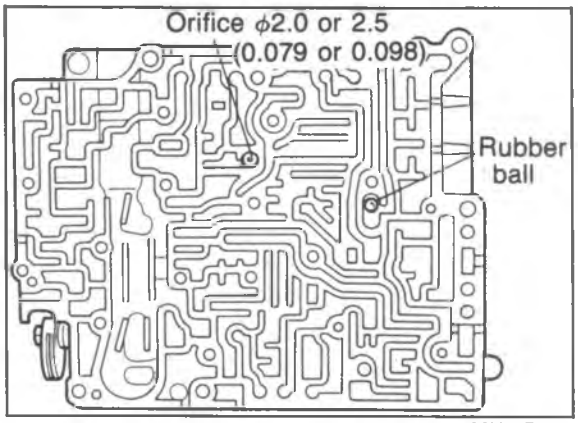

86U07B-303

3. Install the orifice check valve (Non-Turbo: ϕ2.5 mm, 0.098 in, Turbo: ϕ2.0 mm, 0.079 in) and spring, and the rubber ball in the main control body as shown.

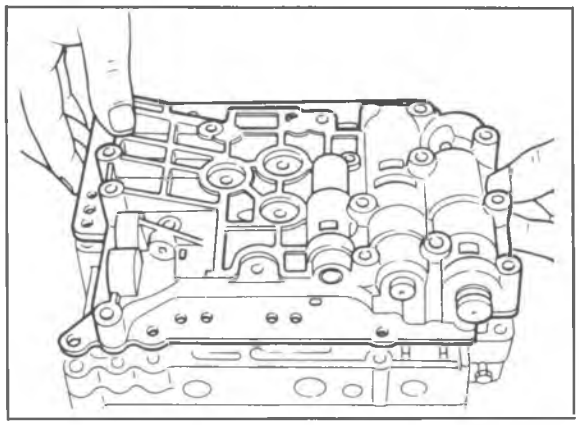
86U07B-304

4. Install the rear control body to the main control body.

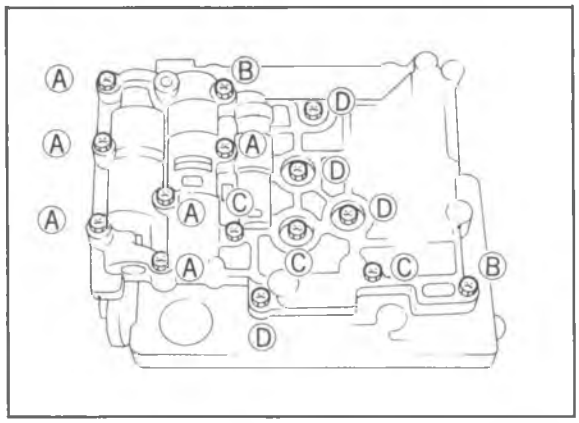

86U07B-305

5. Loosely tighten the bolts.

Note
Match the bolt head letter as shown.

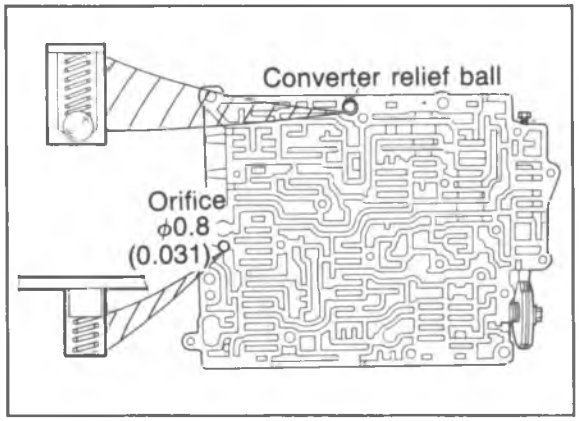

86U07B-306

6. Turn the assembly over and install the orifice check valve (ϕ0.8 mm, 0.031 in) and spring, and the converter relief ball and spring in the main control body as shown.

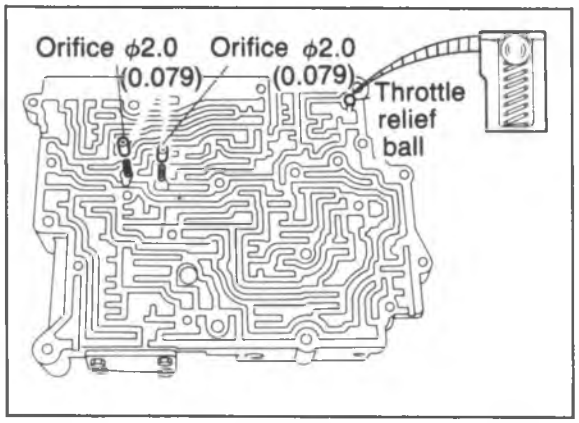

86U07B-307

7. Install the orifice check valves (ϕ2.0 mm, 0.079 in) and springs, and the throttle relief ball and spring in the premain control body as shown.

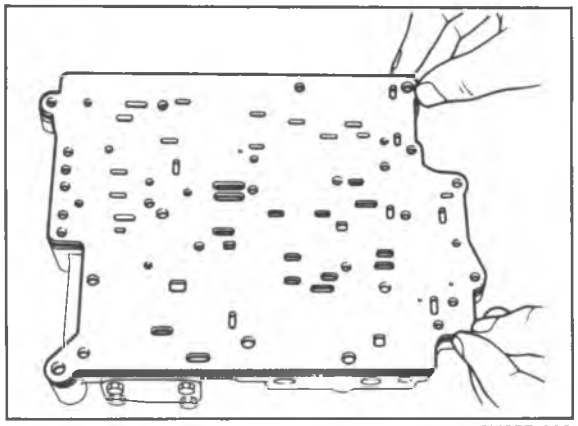

86U07B-308

8. Install the gaskets on both sides of the main separator; then install it onto the premain control body.

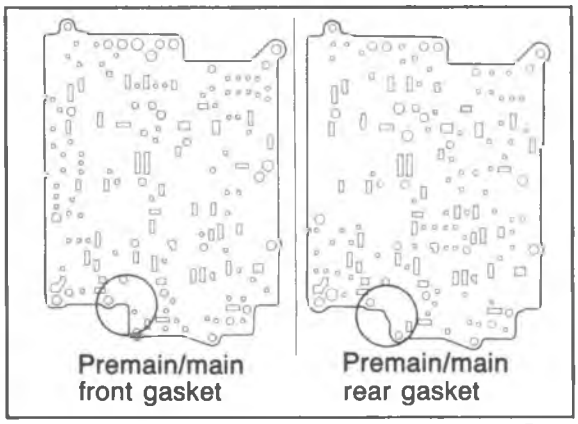

86U07B-309

Note
The premain/main rear gasket and premain/main front gasket are not interchangeable.

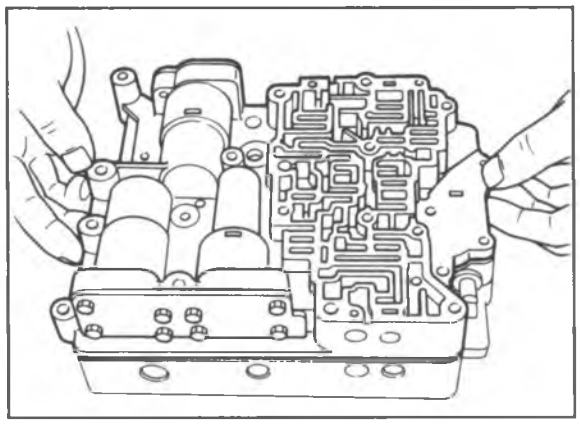

86U07B-310

9. Set the premain control body onto the main control body.

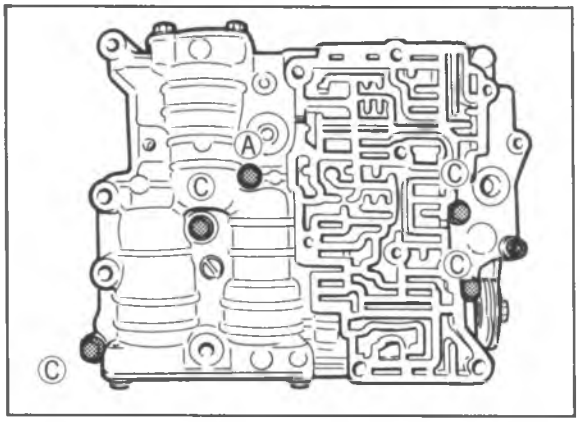

86U07B-311

10. Loosely tighten the bolts.

Note
Match the bolt head letter as shown.

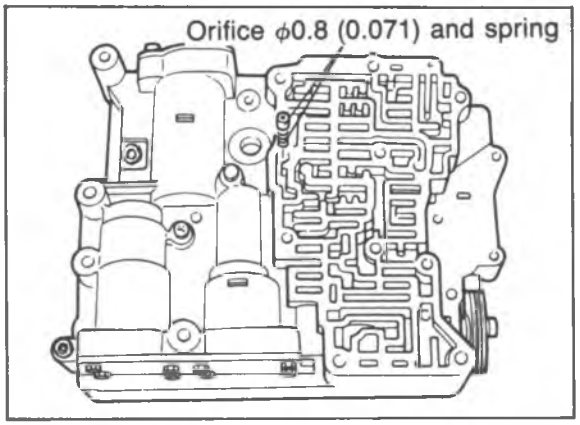

86U07B-312

11. Install the orifice check valve (ϕ0.8 mm, 0.071 in) and spring in the premain control body as shown.

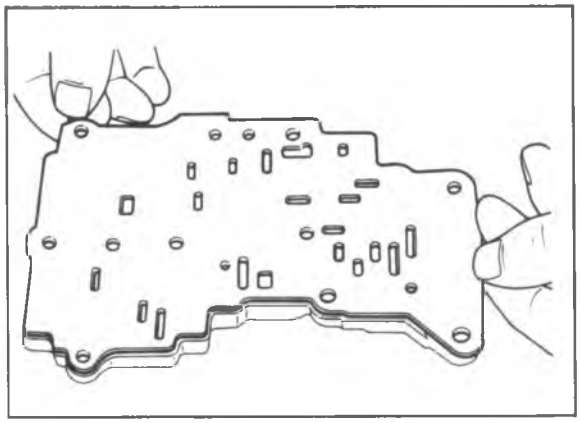

86U07B-313

12. Install the gaskets on both sides of the premain separator; then install it onto the front control body.

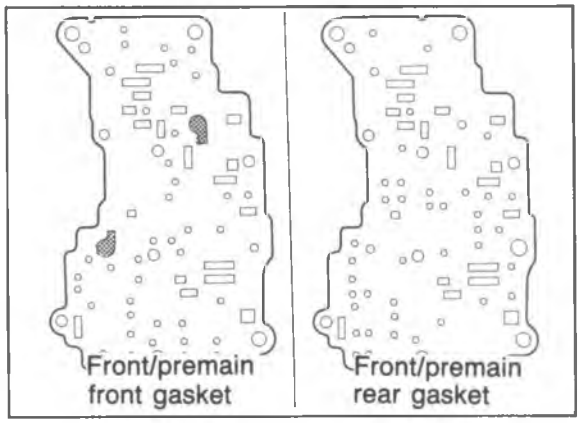

86U07B-314

Note
The front/premain front gasket and front/premain rear gasket are not interchangeable.

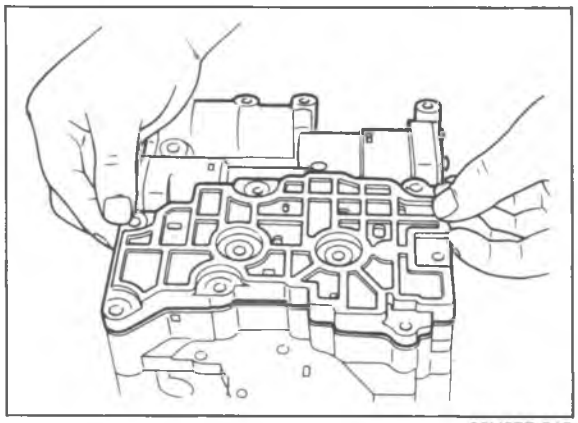

86U07B-315

13. Install the front control body on the premain control body.

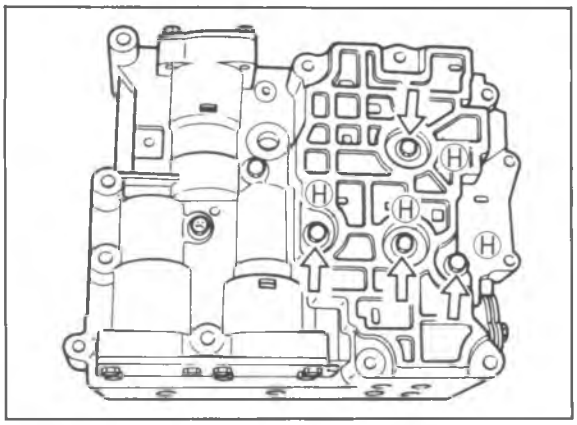

86U07B-316

14. Loosely tighten the bolts.

Note
Match the bolt head letter as shown.

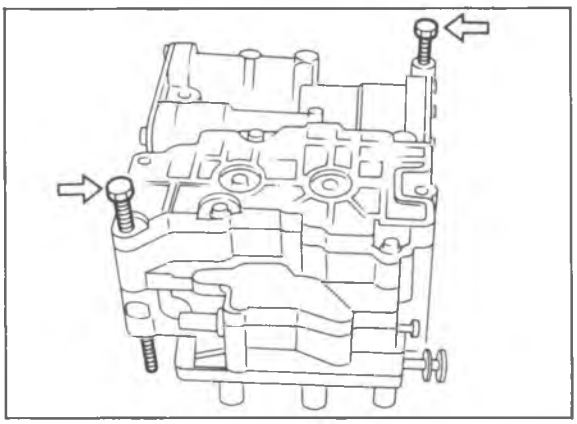

86U07B-317

15. Install the control valve body mounting bolts as shown for alignment.

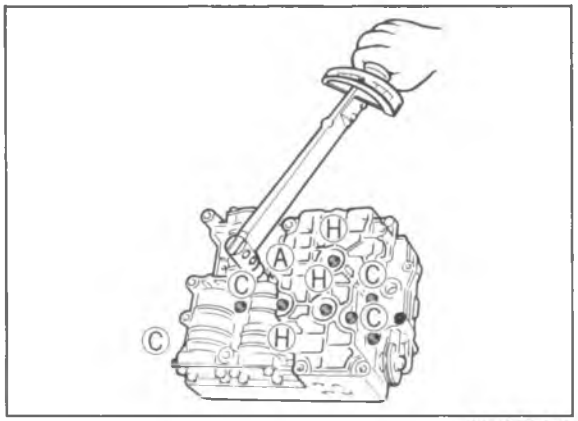

86U07B-318

16. Tighten the mounting bolts.
    (1) Tighten the front control body.

Tightening torque:
6—8 N·m (66—80 cm-kg, 57—69 in-lb)

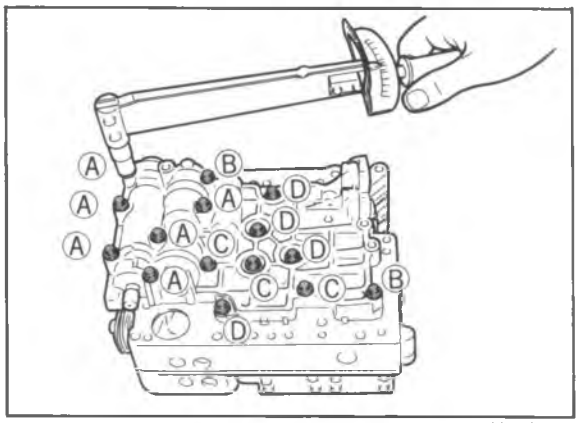

86U07B-319

(2) Tighten the rear control body.

Tightening torque:
6—8 N·m (66—80 cm-kg, 57—69 in-lb)

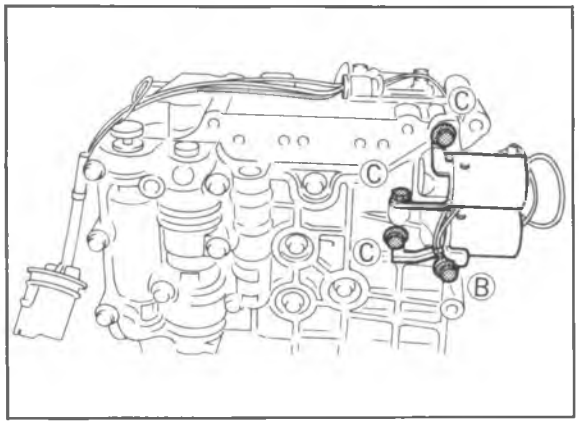

86U07B-320

17. Install the 3-4 solenoid valve and lock-up solenoid valve along with new O-rings and oil strainers.

Tightening torque:
6—8 N·m (66—80 cm-kg, 57—69 in-lb)

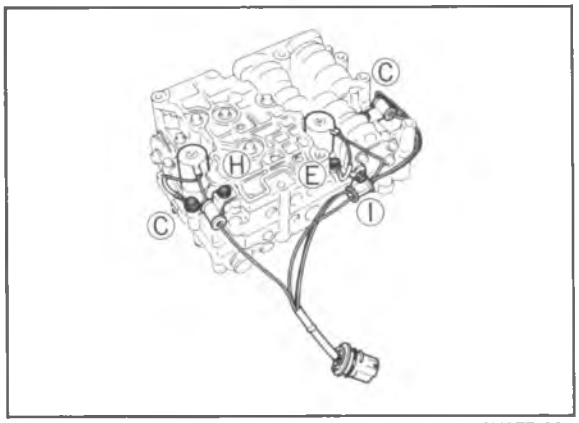

86U07B-321

18. Install the 1-2 solenoid valve and 2-3 solenoid valve along with new O-rings and oil strainers.

Tightening torque:
6—8 N·m (66—80 cm-kg, 57—69 in-lb)

DIFFERENTIAL

Disassembly

Disassemble in the sequence shown in the figure referring to the disassembly note for the specially marked parts.

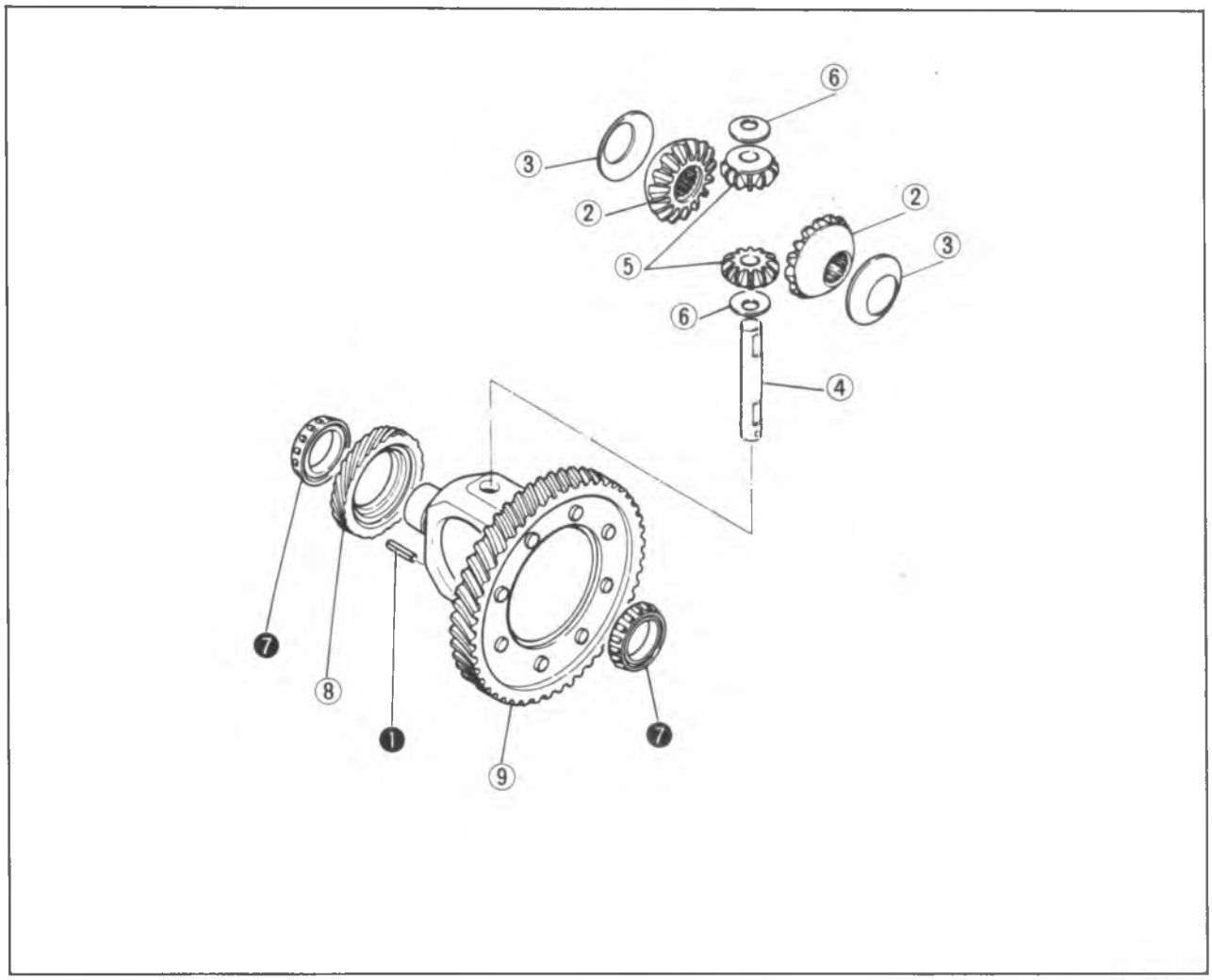

86U07B-322

1. Roll pin
2. Side gear
3. Side gear thrust washer
4. Pinion shaft
5. Pinion gear
6. Pinion gear thrust washer
7. Side bearing inner race
8. Speedometer drive gear
9. Ring gear and gear case assembly

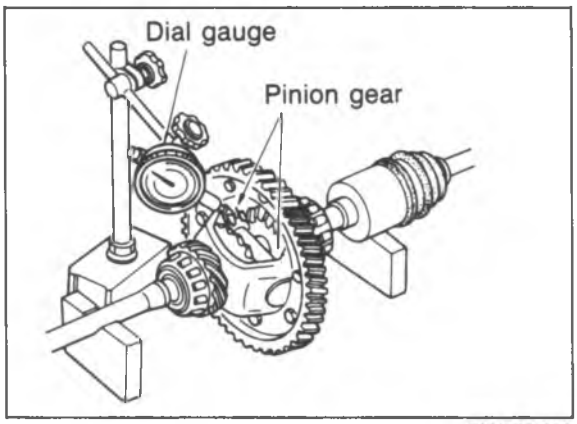

86U07B-323

Disassembly note

Checking backlash

Before disassembly, measure the backlash of the side gears and pinion gears. If not within specification, replace the differential assembly.

Backlash:

Standard 0.025—0.1 mm (0.001—0.004 in)
Maximum 0.5 mm (0.020 in)

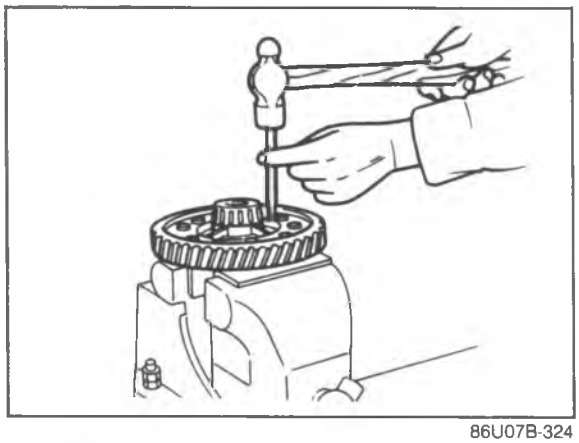

86U07B-324

Roll pin

For removing the roll pin from the pinion shaft, place the gear case on a vise and knock the pin out with a suitable pin punch (ϕ2.0 mm (0.079 in)) and hammer.

Note

a) Use the protective plates to prevent damage to the differential.

b) Insert the punch into the spring pin hole from the ring gear side.

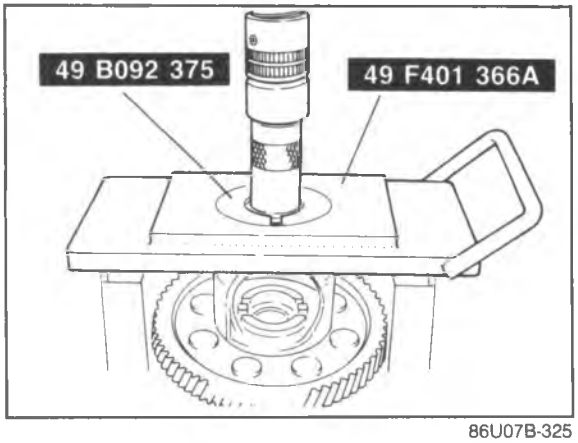

86U07B-325

Side bearing inner race

1. Remove the side bearing inner race (side opposite the ring gear) from the gear case with the **SST**.

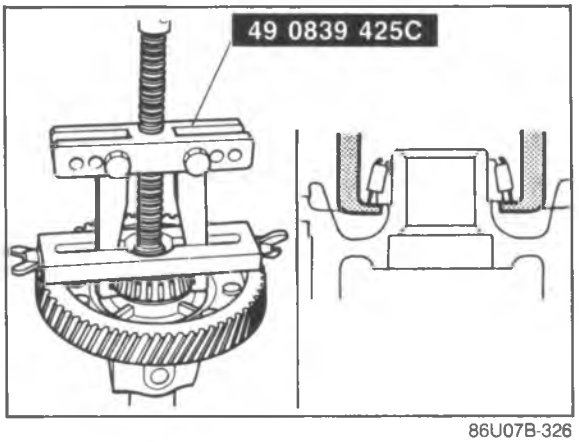

86U07B-326

2. Remove the side bearing inner race (ring gear side) with a combination of parts from the **SST**.

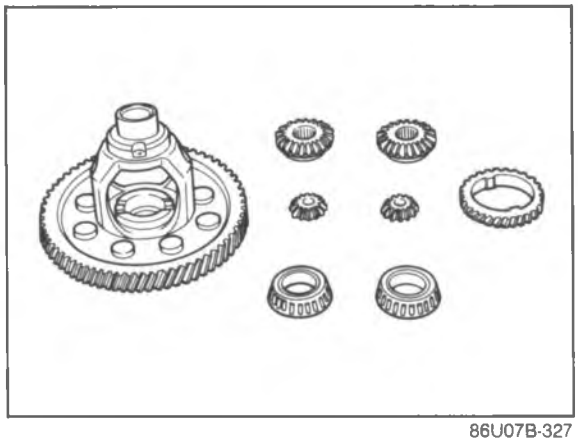

86U07B-327

Inspection

Check the following and replace any faulty parts.

1. Damaged or worn gears
2. Cracked or damaged gear case
3. Damaged bearings

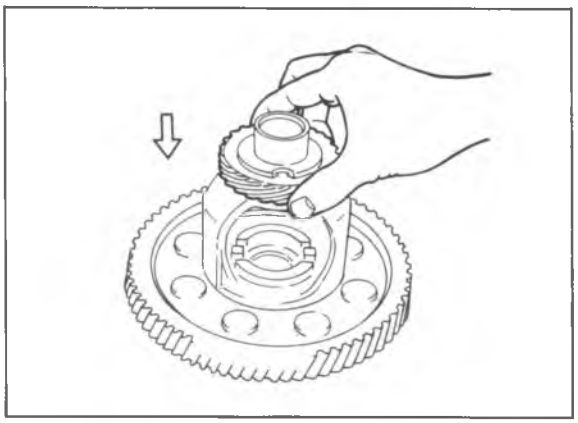

86U07B-328

Assembly

1. Set the speedometer drive gear onto the ring gear and case assembly.

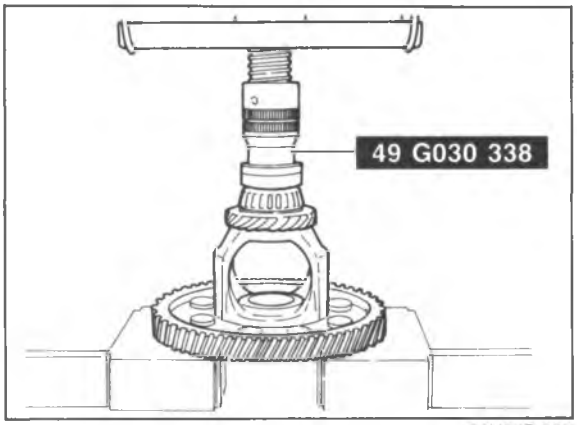

86U07B-329

2. Install the side bearing inner races.
   (1) Press the side bearing inner race (side opposite the ring gear) onto the ring gear and case assembly with the **SST**.
   (2) Press on the other side bearing inner race (ring gear side) in the same manner.

Caution
Do not reuse the bearings if they were removed.

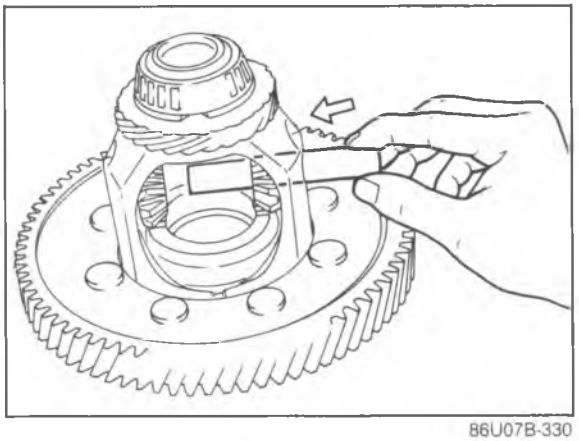

86U07B-330

3. Install the pinion gears and thrust washers into the case.
4. Install the pinion shaft.

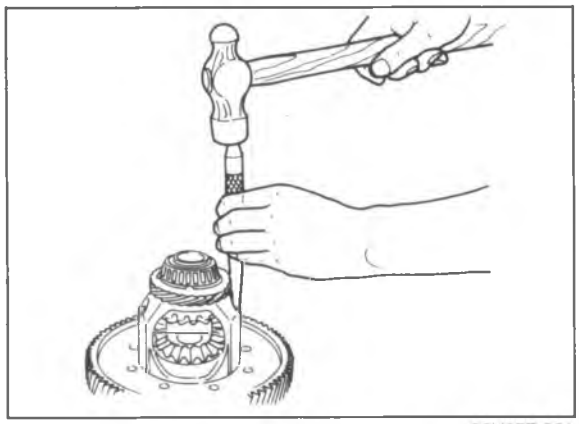

86U07B-331

5. Install the roll pin, and make a crimp so that it will not come out of the gear case.

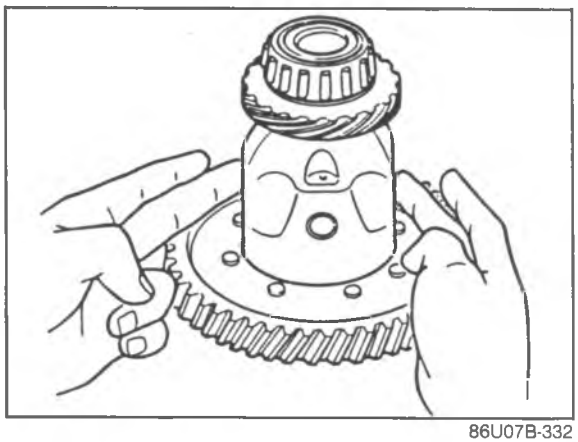

86U07B-332

6. Install the thrust washers and side gears into the gear case at the same time, then turn them back on the pinion gear and align them with the pinion shaft hole.

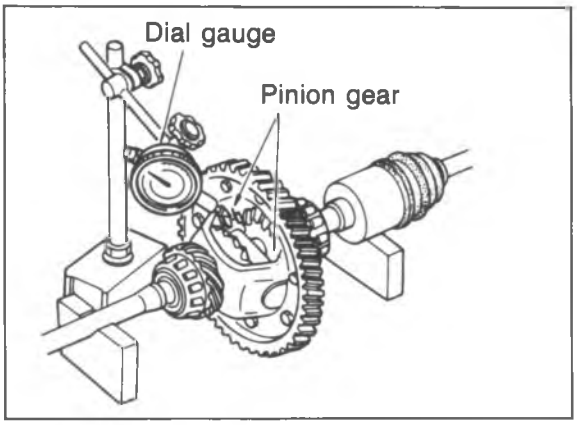

86U07B-333

7. Check and adjust the backlash of the side gears and pinion gears as follows:
   (1) Install the left and right driveshafts in the differential assembly.
   (2) Support the driveshafts on V-blocks.
   (3) Measure the backlash of both pinion gears.

   Backlash:
   Standard 0.025—0.1 mm (0.001—0.004 in)
   Maximum 0.5 mm (0.020 in)

8. If the backlash is not within specification, place the differential assembly.

OUTPUT GEAR

Disassembly

Disassemble in the sequence shown in the figure referring to the disassembly note for the specially marked parts.

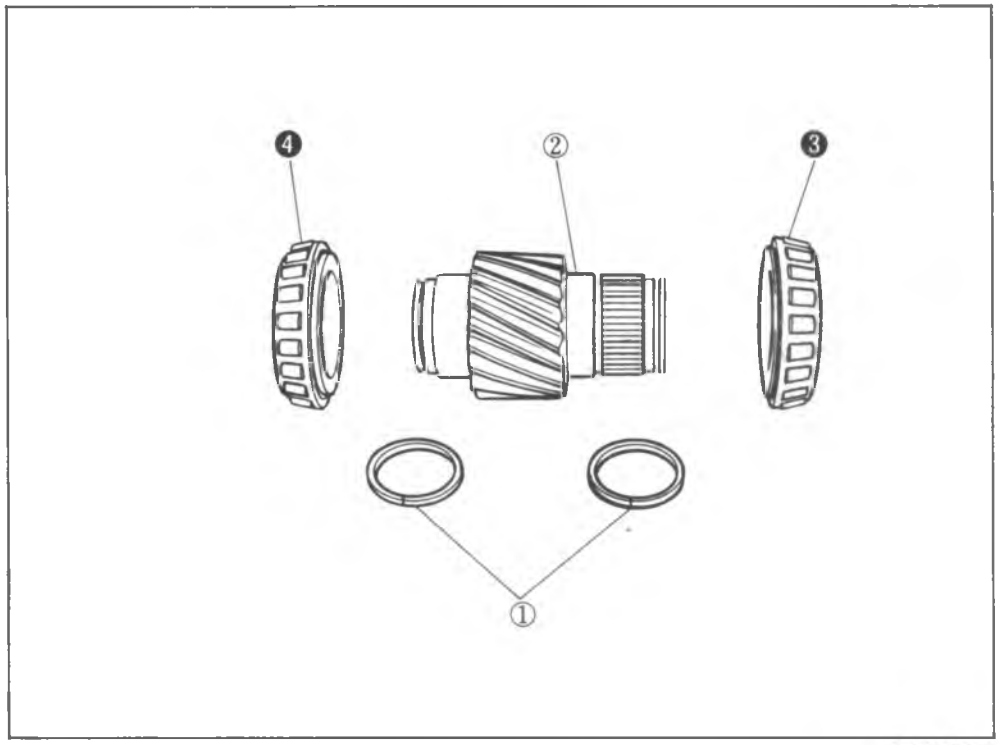

86U07B-334

1. Seal ring
2. Output gear
3. Output gear bearing
4. Output gear bearing

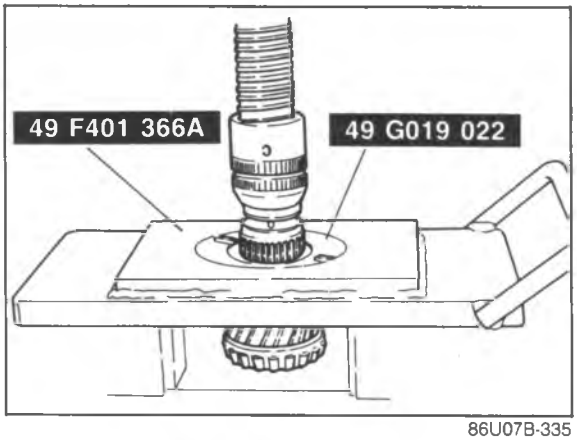

86U07B-335

Disassembly note
Output gear bearings
Remove the output gear bearings from the output gear with the **SST**.

Inspection
Check the following and replace any faulty parts.
1. Damaged or worn output gear
2. Damaged bearing

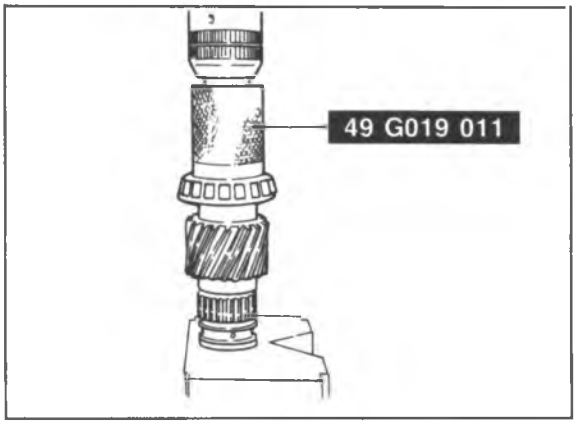

86U07B-336

Assembly
1. Press the output gear bearings onto the output gear with the **SST**.

IDLE GEAR
Disassembly
Disassemble in the sequence shown in the figure referring to the disassembly note for the specially marked parts.

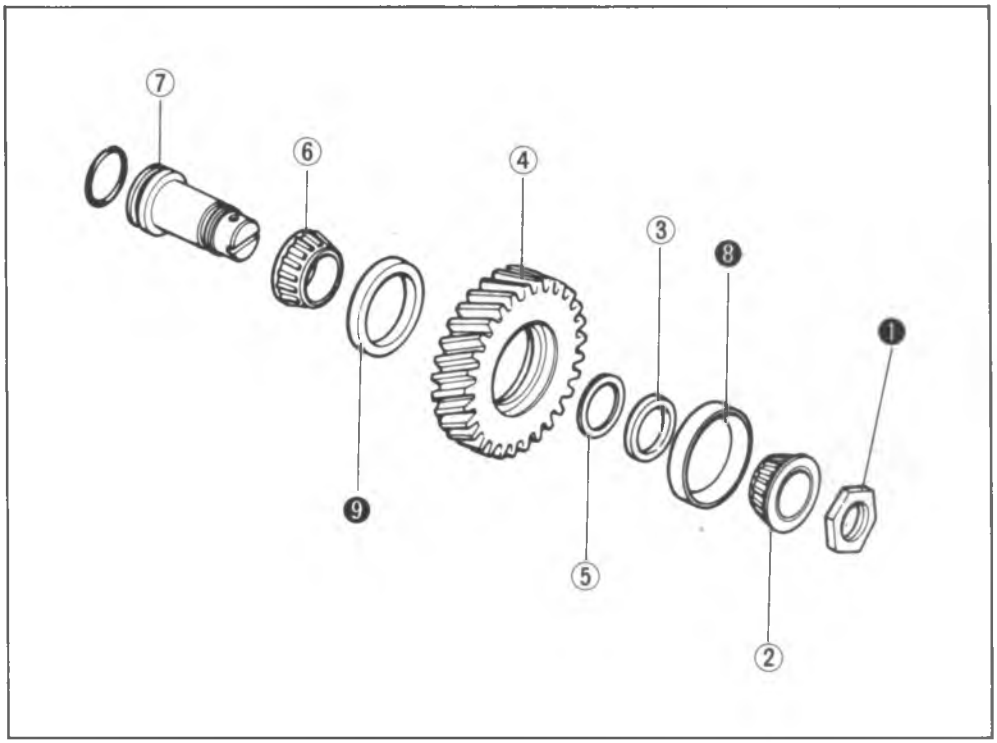

86U07B-337

1. Locknut
2. Idle gear bearing
3. Spacer
4. Idle gear
5. Adjust shim
6. Idle gear bearing
7. Idle shaft
8. Bearing outer race
9. Bearing outer race

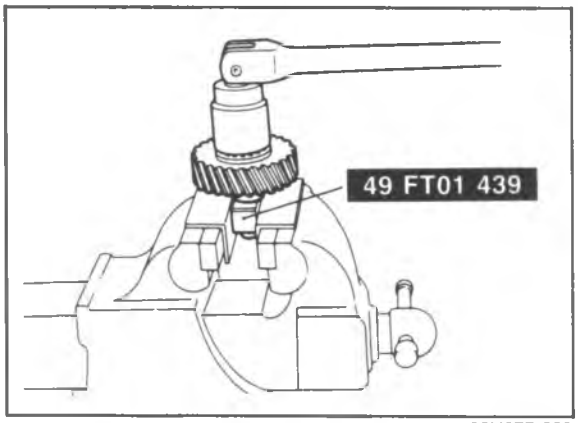

86U07B-338

Disassembly note
Locknut
Secure the idle shaft in a vise with the **SST**; then remove the locknut.

Note
Use the protective plates to prevent damage to the SST.

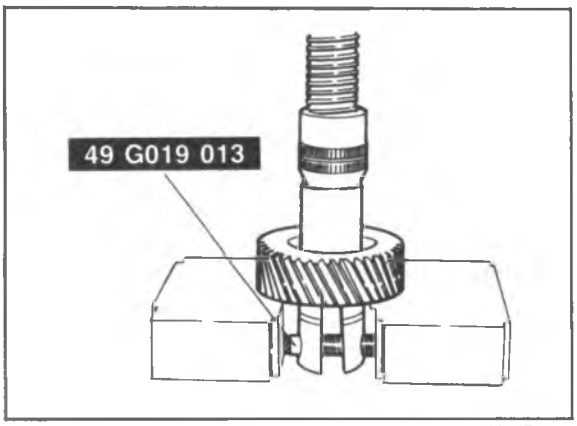

86U07B-339

Bearing outer race
Remove the bearing outer race from the idle gear with the **SST**.

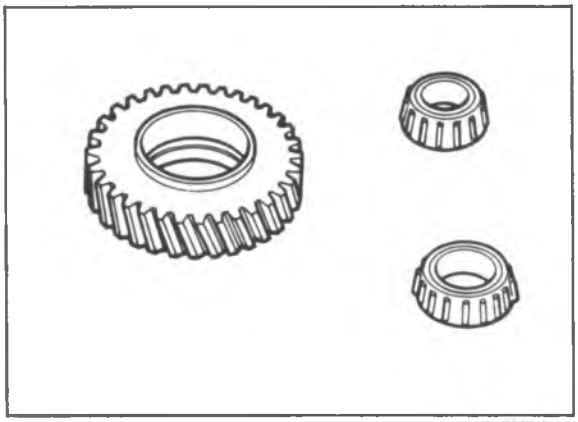
86U07B-340

Inspection
Check the following and replace any faulty parts.
1. Damaged or worn idle gear
2. Damaged or worn bearing

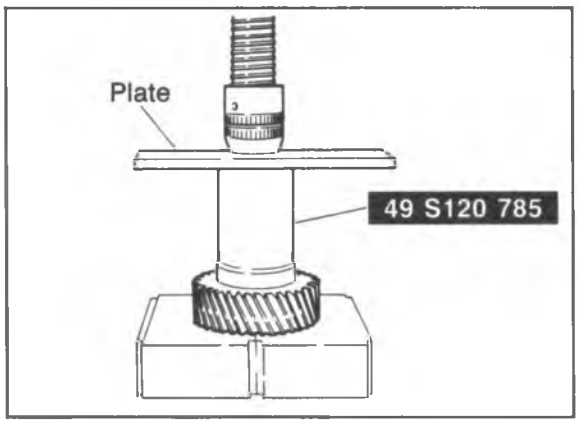

86U07B-341

Assembly
1. Press the bearing outer races in with the **SST**.

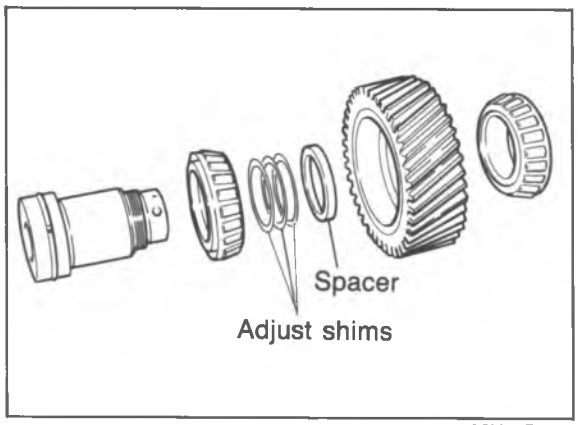

86U07B-342

2. Install the idle gear bearing onto the idle shaft, then install the idle gear, adjust shim, spacer, and bearing.

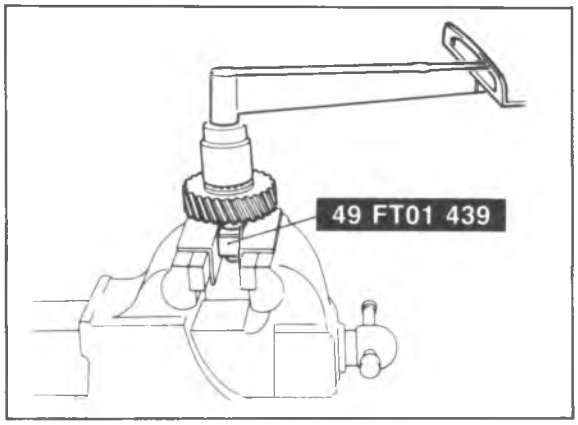

86U07B-343

3. Secure the idle shaft in a vise with the **SST**; then tighten the locknut to the lower limit of the tightening torque.

Tightening torque:
128 N·m (13 m-kg, 94 ft-lb)

Note
Use the protective plates to prevent damage to the SST.

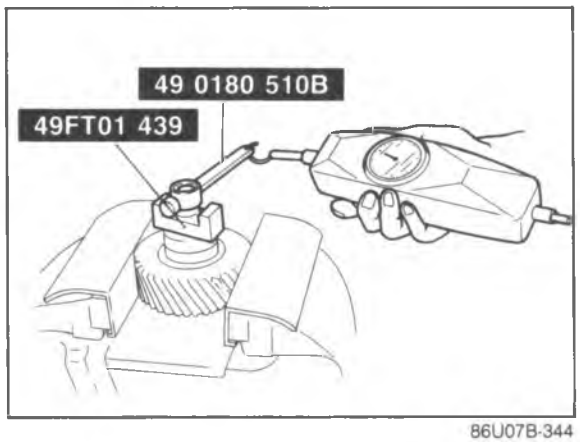

86U07B-344

4. Check and adjust the idle gear bearing preload.
   (1) Turn the idle gear assembly and **SST** over, and secure the gear in the vice.

Note
Use protective plates to prevent damage to the idle gear.

   (2) Attach the **SST** and spring scale or torque wrench, and measure the preload while tightening the locknut.

Tightening torque:
128—177 N·m (13—18 m-kg, 94—130 ft-lb)

Preload:
0.03—0.9 N·m
(0.3—9.0 cm-kg, 0.26—7.8 in-lb)

Value indicated on pull scale:
0.3—9 N (0.03—0.9 kg, 0.066—1.98 lb)

Note
Read the preload when the idle shaft starts to turn.

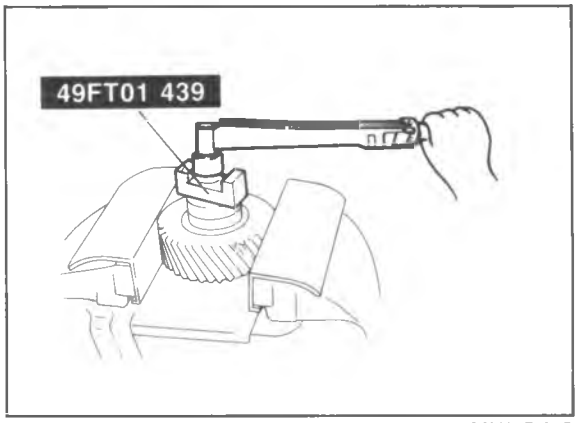

86U07B-345

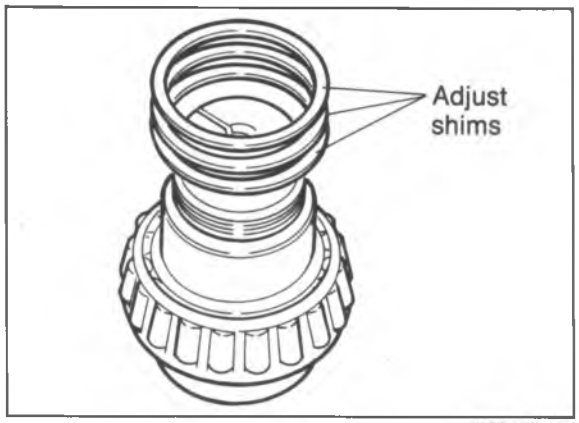

86U07B-346

5. If the specified preload cannot be obtained within the specified tightening torque, adjust by selecting the proper adjust shims.

Thickness of shim
0.10 mm (0.004 in)
0.12 mm (0.005 in)
0.14 mm (0.006 in)
0.16 mm (0.0063 in)
0.18 mm (0.007 in)
0.20 mm (0.008 in)

Note

a) The maximum allowable number of shims is 7.

b) Preload is reduced by increasing the thickness of the shims, or increased by reducing the thickness of the shims.

BEARING COVER ASSEMBLY

Disassembly

Disassemble in the sequence shown in the figure referring to the disassembly note for the specially marked parts.

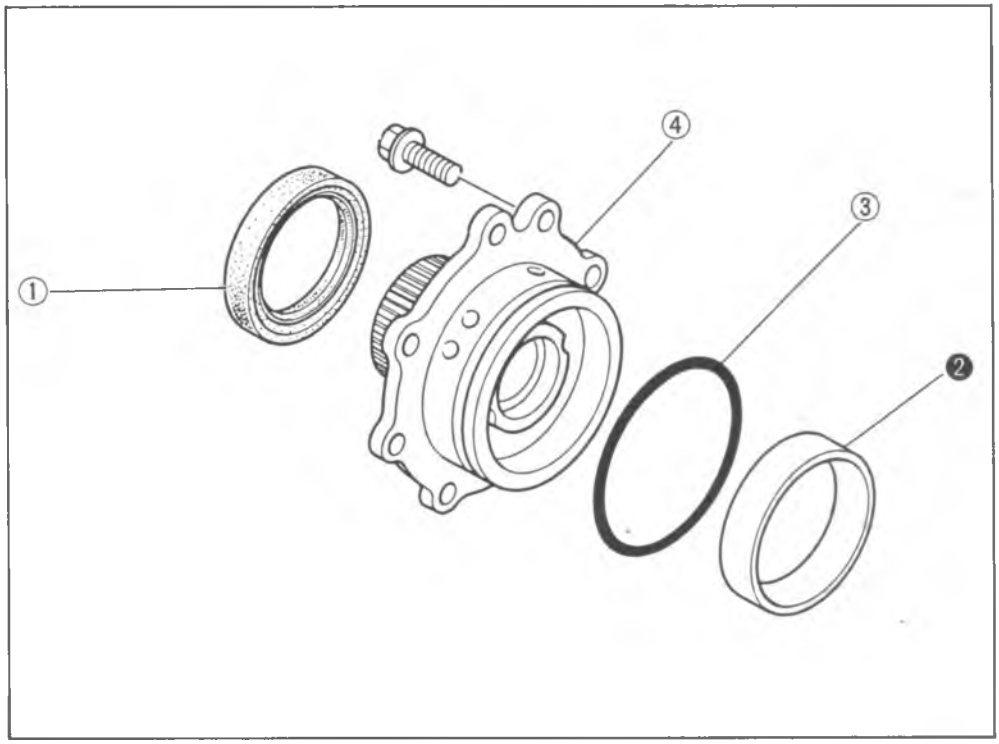

86U07B-347

1. Oil seal
2. Bearing outer race
3. O-ring
4. Bearing cover

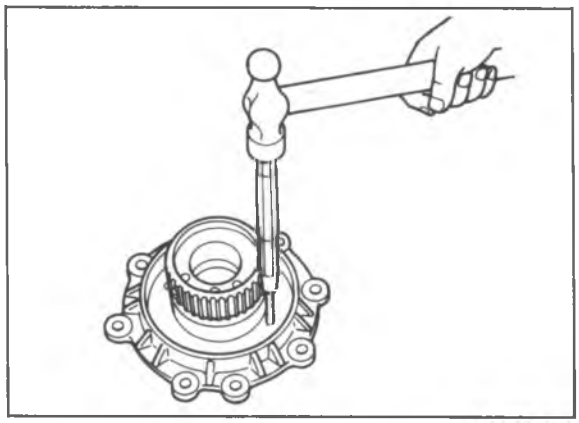

86U07B-348

Disassembly note
Bearing outer race
Remove the bearing outer race with a pin punch and hammer as shown.

Inspection
Check the following and replace any faulty parts.
1. Damaged bearing cover
2. Damaged or worn bushing

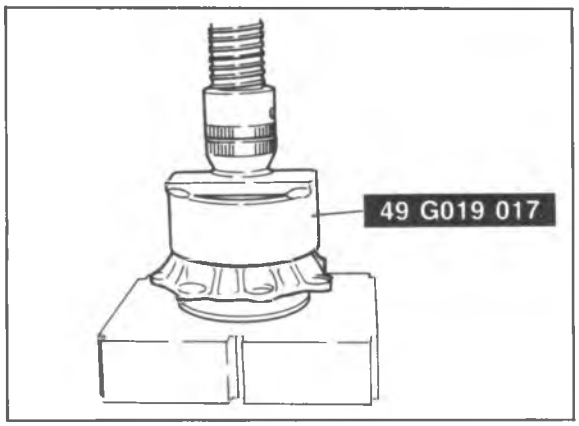

86U07B-349

Assembly
1. Press the bearing outer race into the cover.
2. Press the oil seal into the cover with the **SST**.

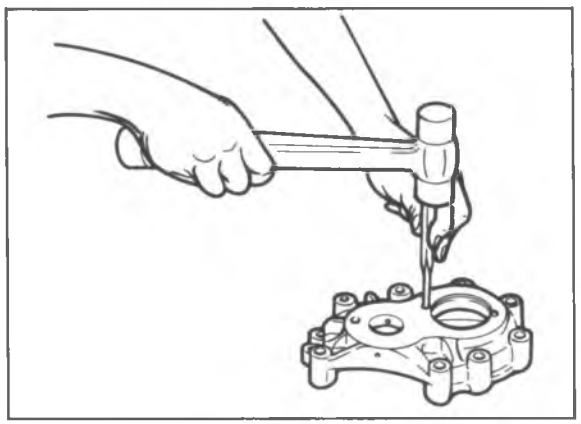

86U07B-350

BEARING HOUSING
Disassembly
Remove the bearing outer race with a pin punch and hammer.

Note
Install the bearing outer race during reassembly of transaxle to adjust the preload.

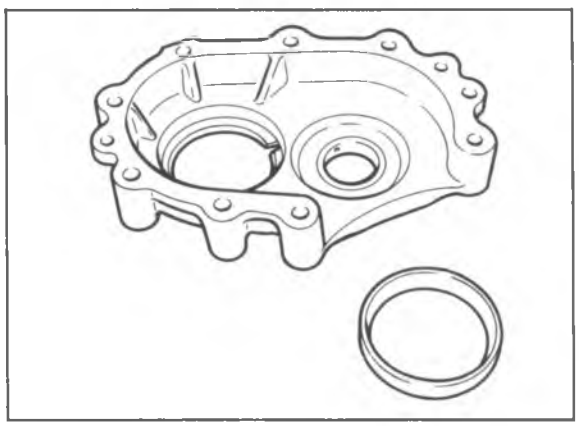

86U07B-351

Inspection
Check the following and replace any faulty parts.
1. Damaged bearing housing
2. Damaged bearing outer race

ASSEMBLY

PRECAUTION

(1) The automatic transaxle consists of high-precision-finished parts, necessitating careful inspection before assembly because even a small nick could cause fluid leakage or affect performance.
(2) Clean out oil holes and oil passages with compressed air, and check that there are no obstructions.
(3) Before assembly, apply ATF to each O-ring, seal ring, rotating part, and friction part.
(4) If the brake band or drive plates are replaced with new ones, first soak them in ATF for at least 2 hours before installing.
(5) Each seal gasket and O-ring must be replaced with a new one.
(6) Be sure to install all thrust bearings and races in the correct direction and position.

ASSEMBLY-STEP 1
Torque Specifications

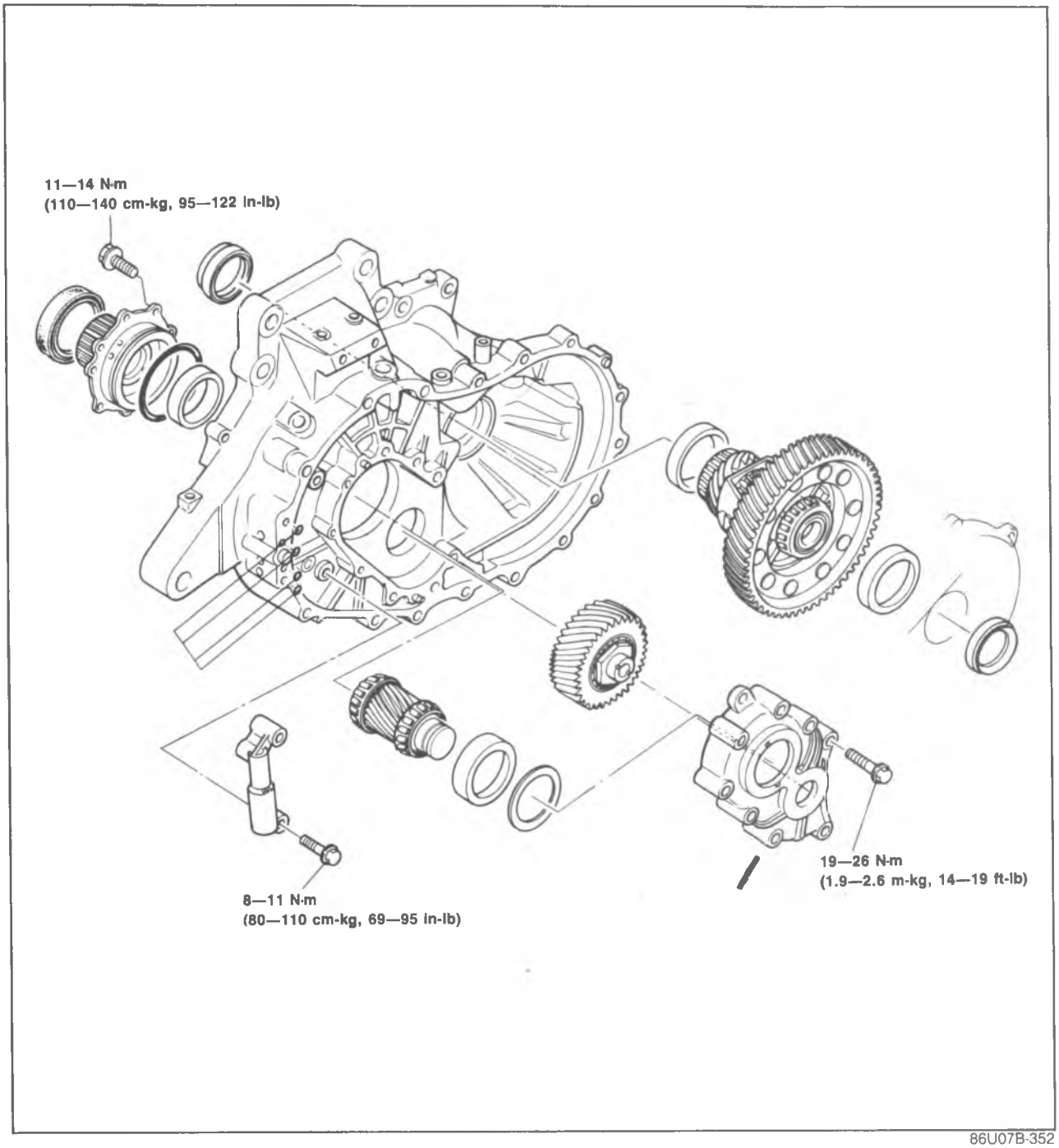

86U07B-352

Procedure

1. Adjust the preload at the output gear bearing and select the adjust shim(s) as described below.

Note
To adjust the preload, use the SST shown below.

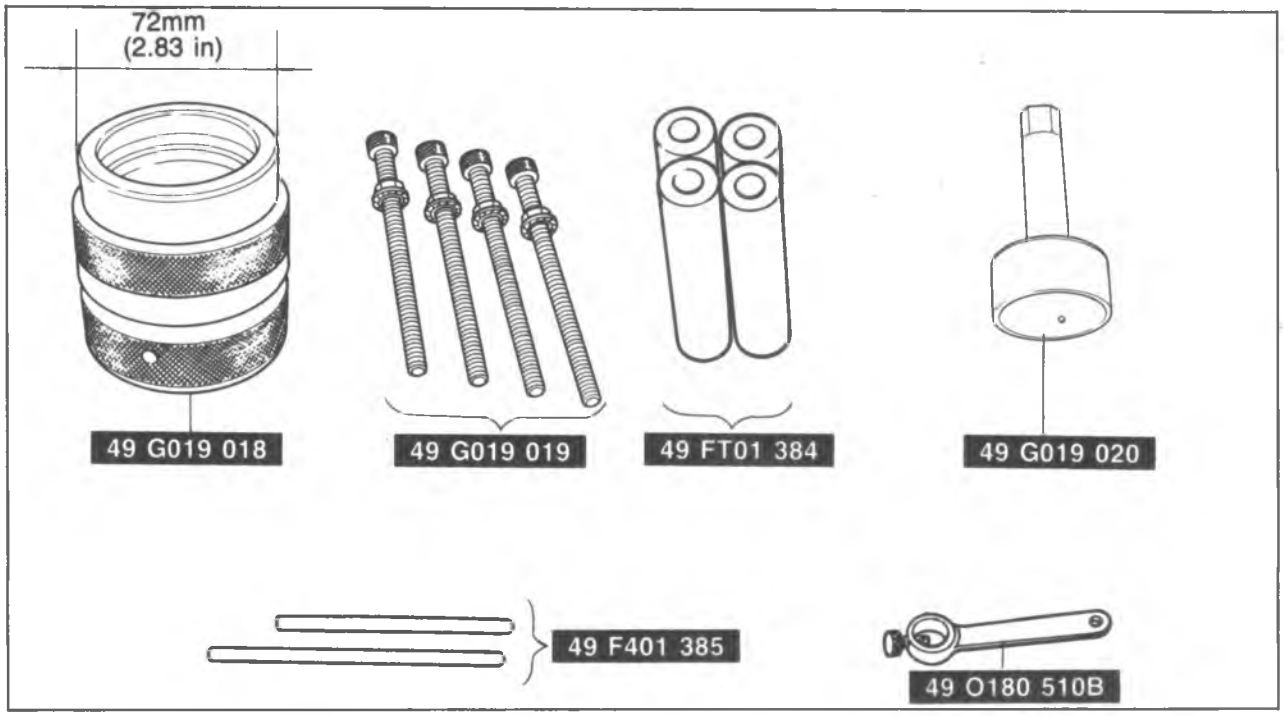

86U07B-353

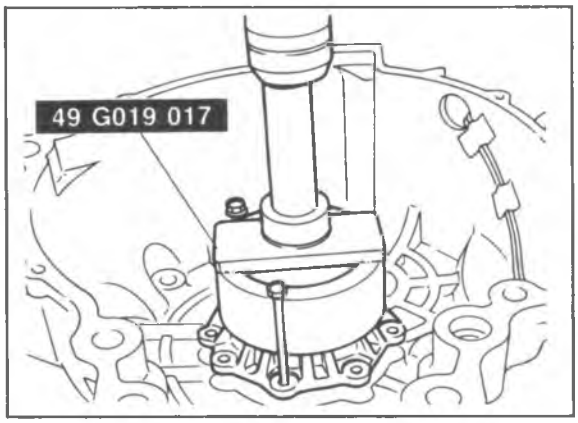

86U07B-354

(1) Press the bearing cover in after aligning it with guide bolts as shown.

Tightening torque:
11—14 N·m
(110—140 cm-kg, 95—122 in-lb)

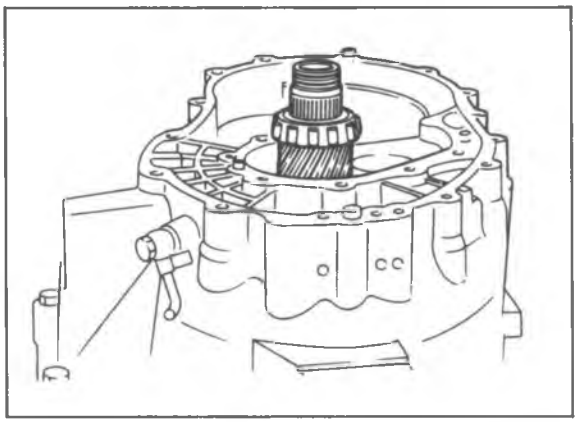

86U07B-499

(2) Install the converter housing onto the transaxle hanger.
(3) Remove the bearing outer race and adjust shims from the bearing housing. (Refer to page 7B—136)
(4) Mount the output gear assembly onto the converter housing.

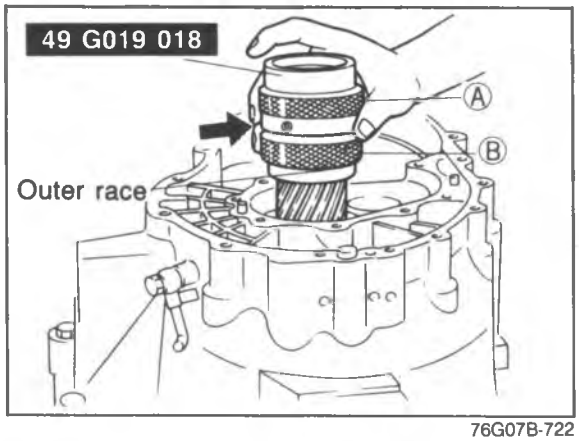

76G07B-722

(5) Install the outer race removed in step (2) to the **SST**; then mount them on the output gear assembly.

Caution
Eliminate the gap (arrow) by turning A or B of the selector.

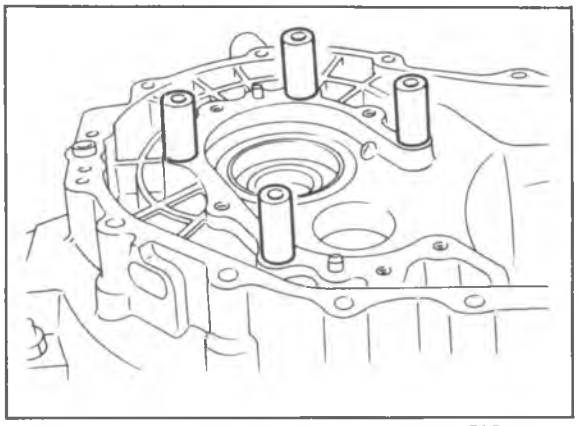
76G07B-723

(6) Set the four **SST** on the converter housing in the positions shown.

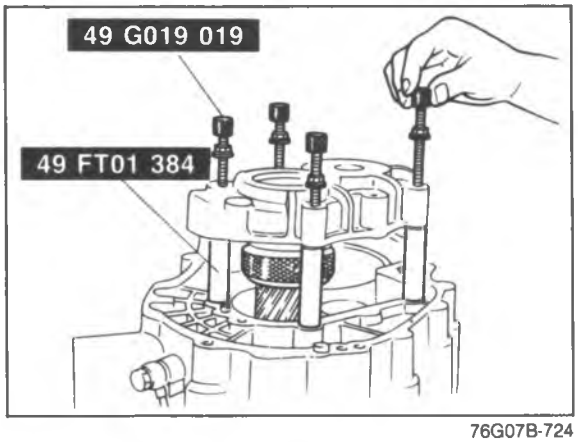

76G07B-724

(7) Set the bearing housing on the **SST** (selector) and install the four **SST** (bolts); then tighten them to the specified torque.

Tightening torque:
19—26 N·m
(1.9—2.6 m-kg, 13.7—18.8 ft-lb)

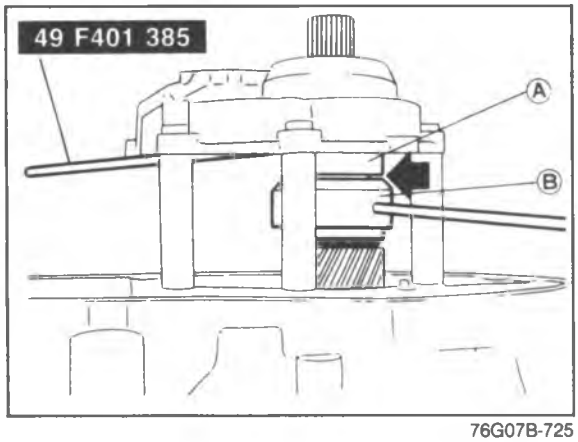

76G07B-725

(8) Turn the **SST** (selector) to increase the clearance indicated by the arrow with the **SST** (bars) until it no longer turns.

Note
This is to seat the bearing.

(9) Turn the selector in the opposite direction until the preload is eliminated (gap is reduced).

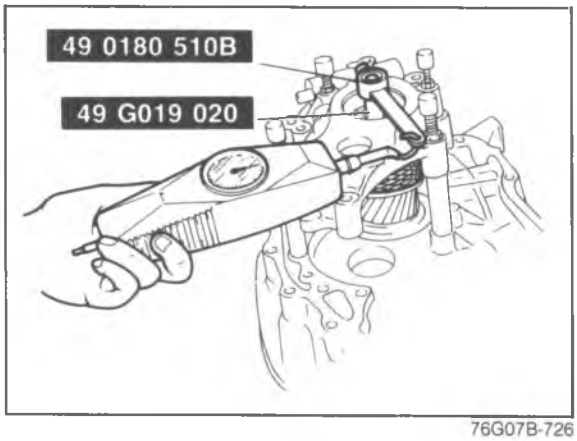

76G07B-726

(10) Mount the **SST** and pull scale or torque wrench on the output gear.
(11) Increase the clearance between A and B to obtain the specified preload/pull scale reading.

Preload: 0.5—0.9 N·m
(5.0—9.0 cm-kg, 4.34—7.81 in-lb)
Reading on pull scale:
5—9 N (0.5—0.9 kg, 1.1—1.98 lb)

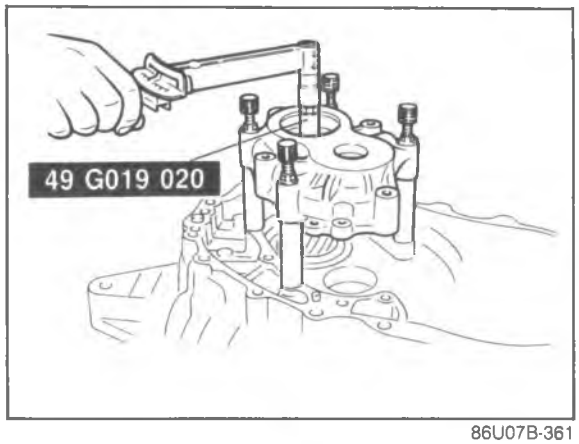

86U07B-361

Note
Read the preload when the output gear starts to turn.

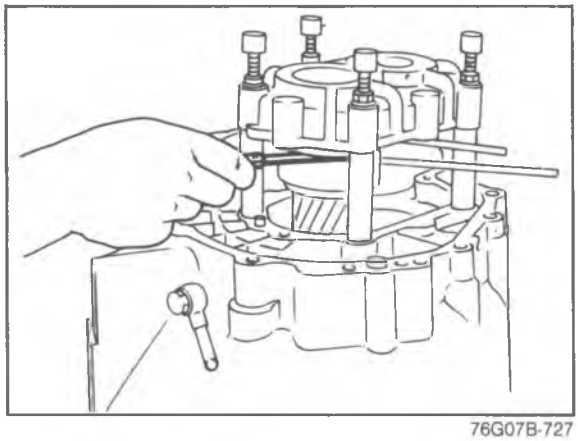
76G07B-727

(12) Measure the clearance. Select adjust shim(s) equivalent to the measured clearance.

Thickness of shim	
0.10 mm (0.004 in)	0.18 mm (0.007 in)
0.12 mm (0.005 in)	0.20 mm (0.008 in)
0.14 mm (0.006 in)	0.50 mm (0.020 in)
0.16 mm (0.0063 in)	

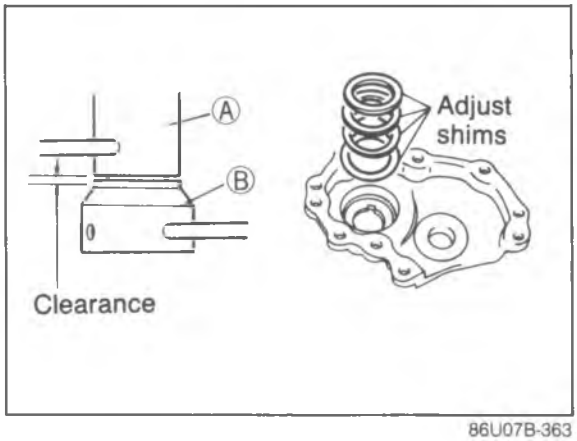

86U07B-363

Caution
a) Measure the clearance around the entire circumference, and select shims equivalent to the maximum clearance.
b) The maximum allowable number of shims is 7.

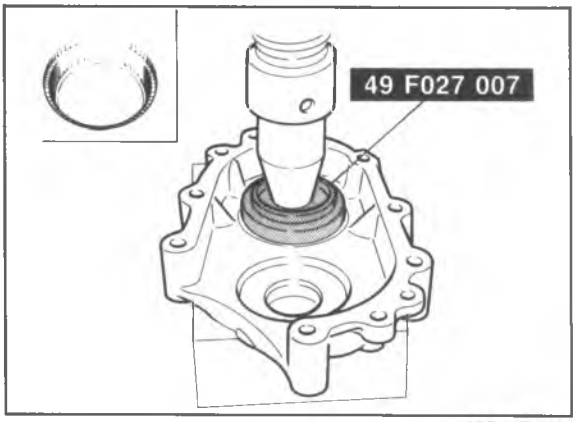

76G07B-728

(13) Remove the bearing housing and **SST**.
(14) Install the required shim(s) and press the bearing race into the bearing housing with the **SST**.

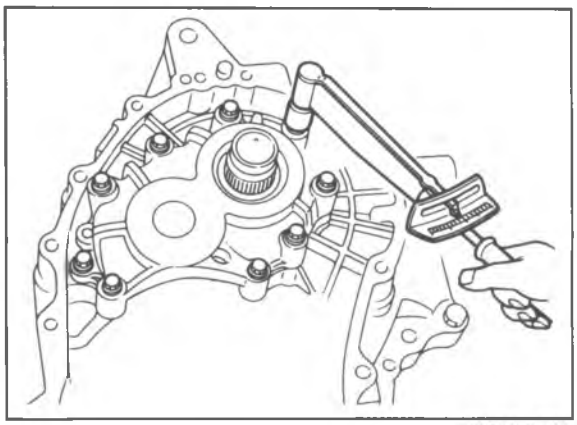

76G07B-729

(15) Install the bearing housing.

Tightening torque:
19—26 N·m (1.9—2.6 m-kg, 14—19 ft-lb)

(16) Check that the preload/pull scale reading is within specification. If not within specification return to step (2).

Preload: 0.03—0.9 N·m
(0.3—9.0 cm-kg, 0.26—7.81 in-lb)
Reading on pull scale:
0.3—9 N (0.03—0.9 kg, 0.066—1.98 lb)

(17) Remove the bearing housing and output gear assembly.

2. Adjust the differential side bearing preload and select the adjust shim(s) as described below.

Note
To inspect and adjust the preload, use the SST shown below.

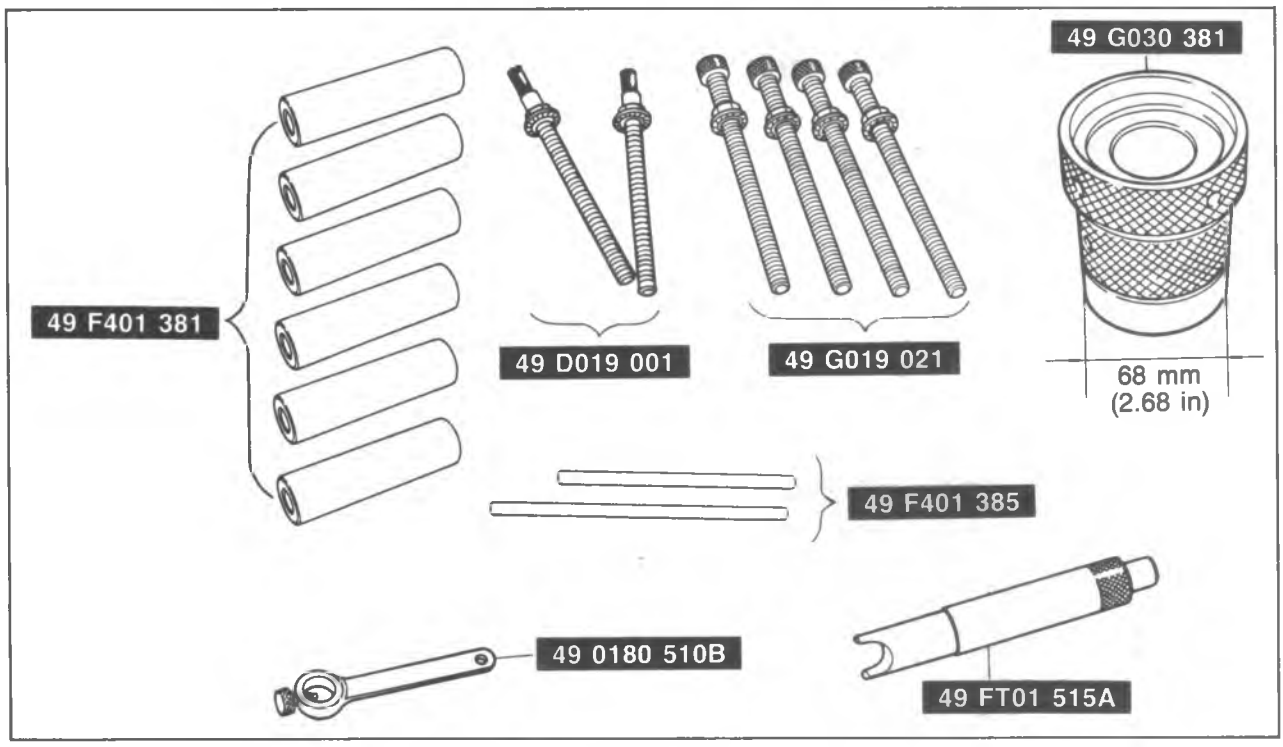

86U07B-366

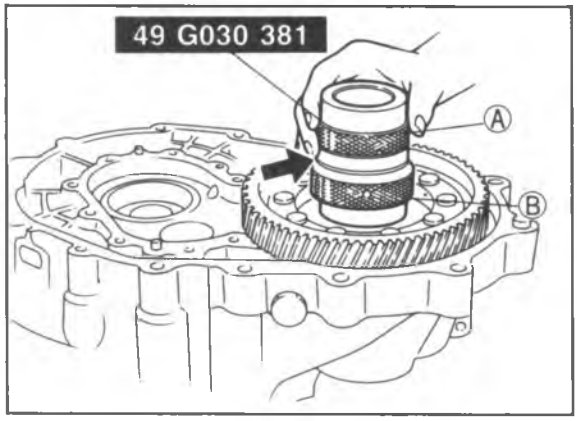

86U07B-367

(1) Remove the bearing outer race and adjust shims from the transaxle case. (Refer to page 7B—80)
(2) Set the differential assembly into the converter housing.
(3) Install the outer race removed in step (1) into the **SST**; then set them on the differential assembly.

Caution
Eliminate the gap by turning either A or B of the selector.

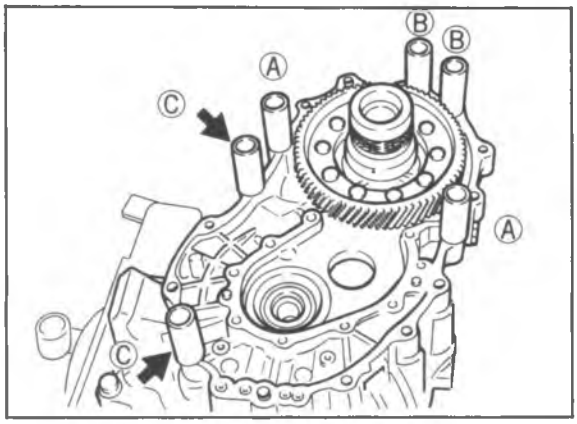

86U07B-368

(4) Set the six **SST** in the positions shown.

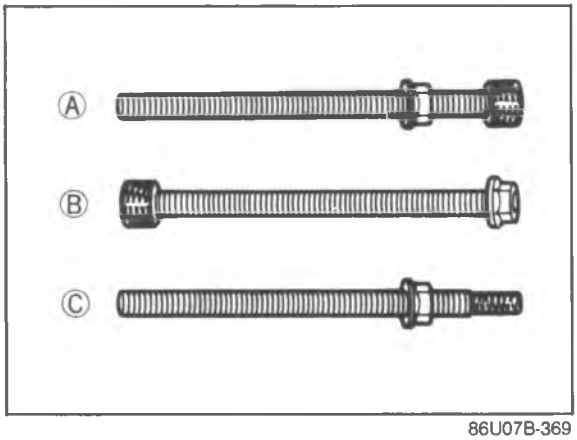

86U07B-369

Note
Install the bolts in the positions shown in the illustration above.

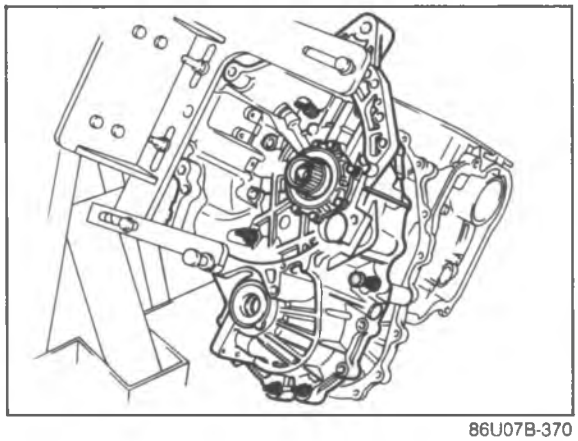

86U07B-370

(5) Set the transaxle case on the selectors.
(6) Tighten the **SST** (bolts) to the specified torque.

Tightening torque:
36—52 N·m (3.7—5.3 m-kg, 27—38 ft-lb)

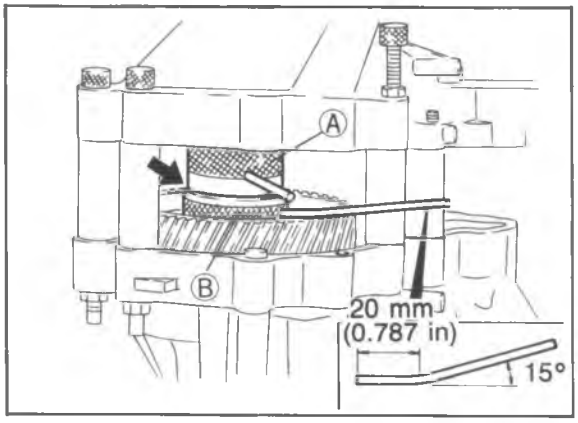

86U07B-371

(7) Turn the **SST** (selector) to increase the clearance indicated by the arrow with the **SST** (bars), until it no longer turns.

Note
a) This is to seat the bearings.
b) To turn the SST (B), bend the bar as shown.

(8) Turn the selector in the opposite direction until the preload is eliminated (gap is reduced).

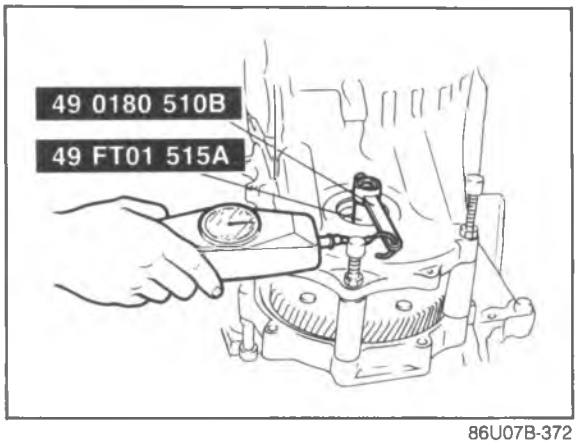

86U07B-372

(9) Insert the **SST** through the oil seal hole of the transaxle case and attach it to the pinion shaft.
(10) Mount the **SST** and pull scale or torque wrench.
(11) Widen the clearance between A and B to obtain the specified preload/pull scale reading.

Preload:
0.5 N·m (5 cm-kg, 4.3 in-lb)
Reading on pull scale:
5 N (0.5 kg, 1.1 lb)

Note
Read the preload when the differential starts to turn.

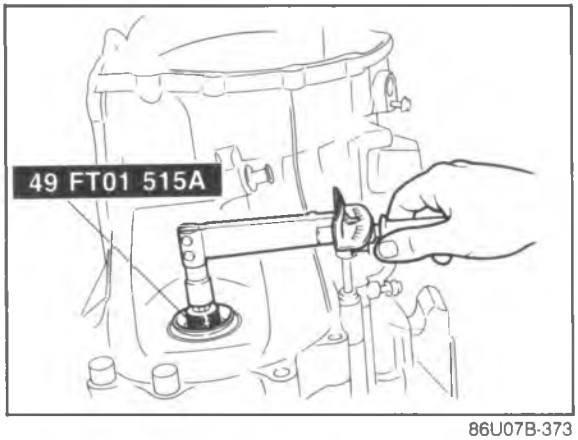

86U07B-373

(12) Measure the clearance between A and B.
(13) Add **0.2 mm (0.0079 in)** to the measured clearance, and select the shim(s) closest in valve to that measurement.

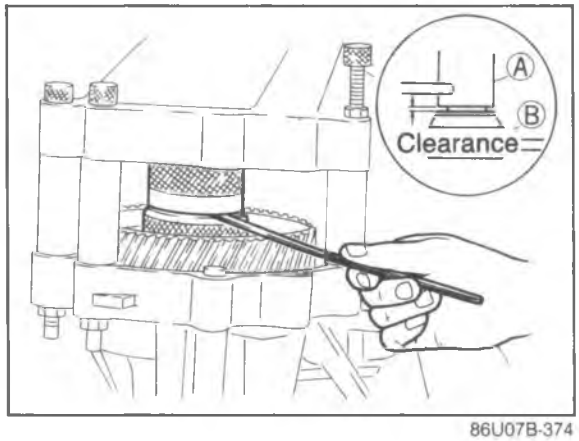

86U07B-374

Thickness of shim	
0.10 mm (0.004 in)	0.20 mm (0.008 in)
0.12 mm (0.005 in)	0.50 mm (0.020 in)
0.14 mm (0.006 in)	0.70 mm (0.028 in)
0.16 mm (0.0063 in)	1.00 mm (0.039 in)
0.18 mm (0.007 in)	

Caution
a) Measure the clearance around the entire circumference, and select shims equivalent to the maximum clearance.
b) The maximum allowable number of shims is 3.

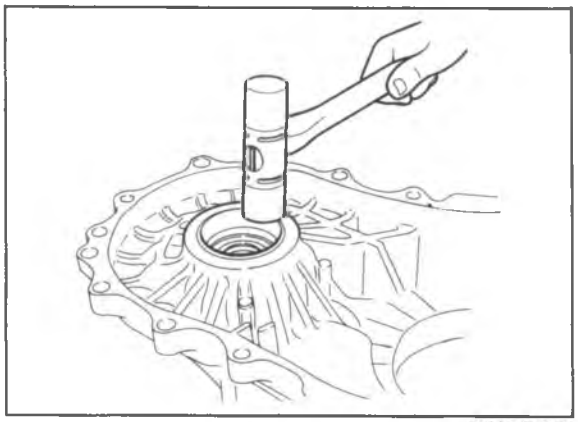

86U07B-375

(14) Remove the transaxle case and selector.
(15) Install the required shim(s) and tap the bearing race into the transaxle case.

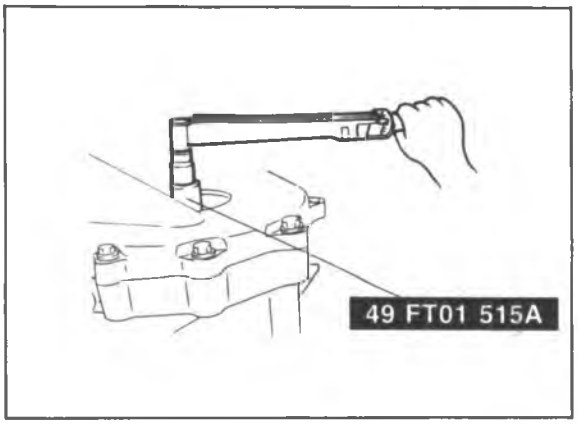

86U07B-376

(16) Install the transaxle case.

Tightening torque:
37—52 N·m (3.8—5.3 m-kg, 27—38 ft-lb)

(17) Check that the preload is within specification. If not within specification, return to step (2).

Preload: 2.9—3.9 N·m
(30—40 cm-kg, 26—35 in-lb)
Reading on pull scale: 29—39 N
(3.0—4.0 kg, 6.6—8.8 lb)

(19) Remove the transaxle case.

3. Install the idle gear and output gear as an assembly by tapping in with a plastic hammer.

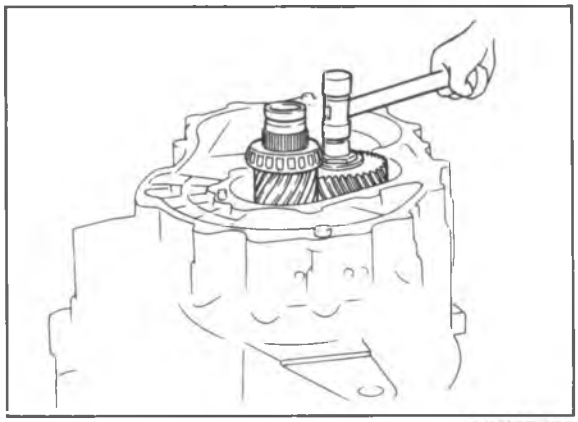

86U07B-377

4. Install the bearing housing.
   (1) Install the bearing housing on the converter housing.

Tightening torque:
19—26 N·m (1.9—2.6 m-kg, 14—19 ft-lb)

   (2) Align the groove on the idle shaft with the matching mark on the bearing housing.
   (3) Tap the roll pin in with a pin punch and hammer.
5. Apply ATF to the O-rings and install them into the 2-3 accumulator; then install the 2-3 accumulator piston assembly.

Tightening torque:
8—11 N·m (80—110 cm-kg, 69—95 in-lb)

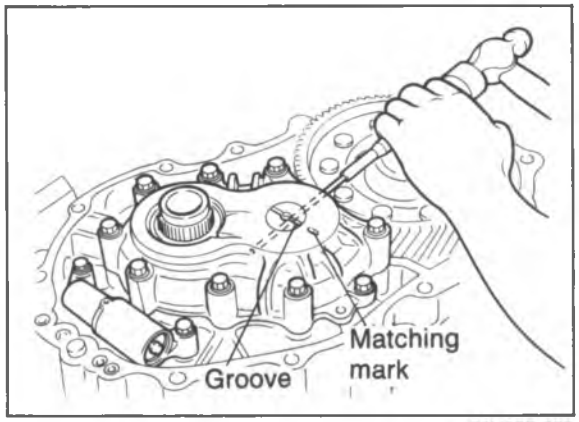

86U07B-378

ASSEMBLY-STEP 2
Torque Specifications

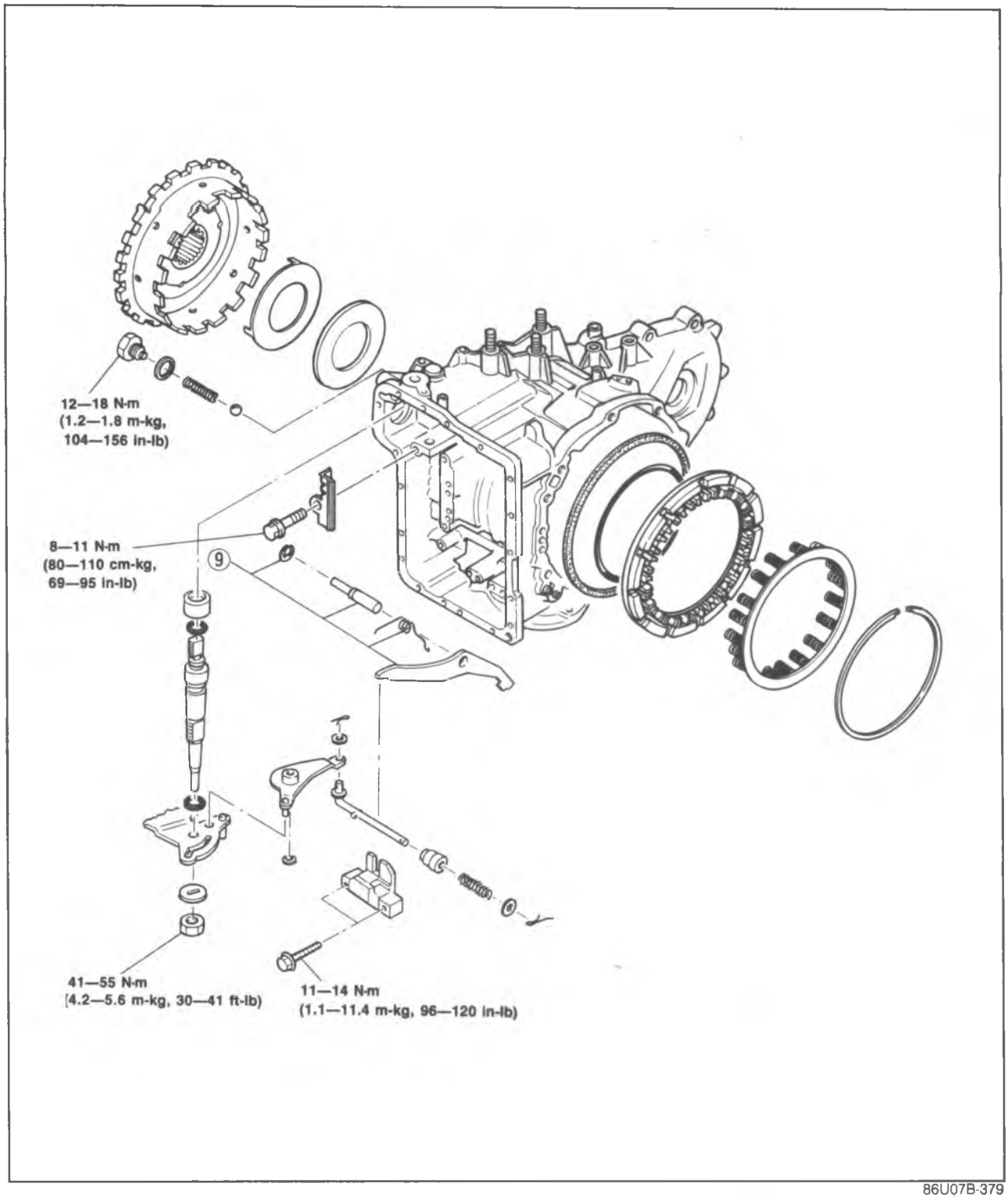

86U07B-379

Thrust Washer, Bearing, and Race Locations

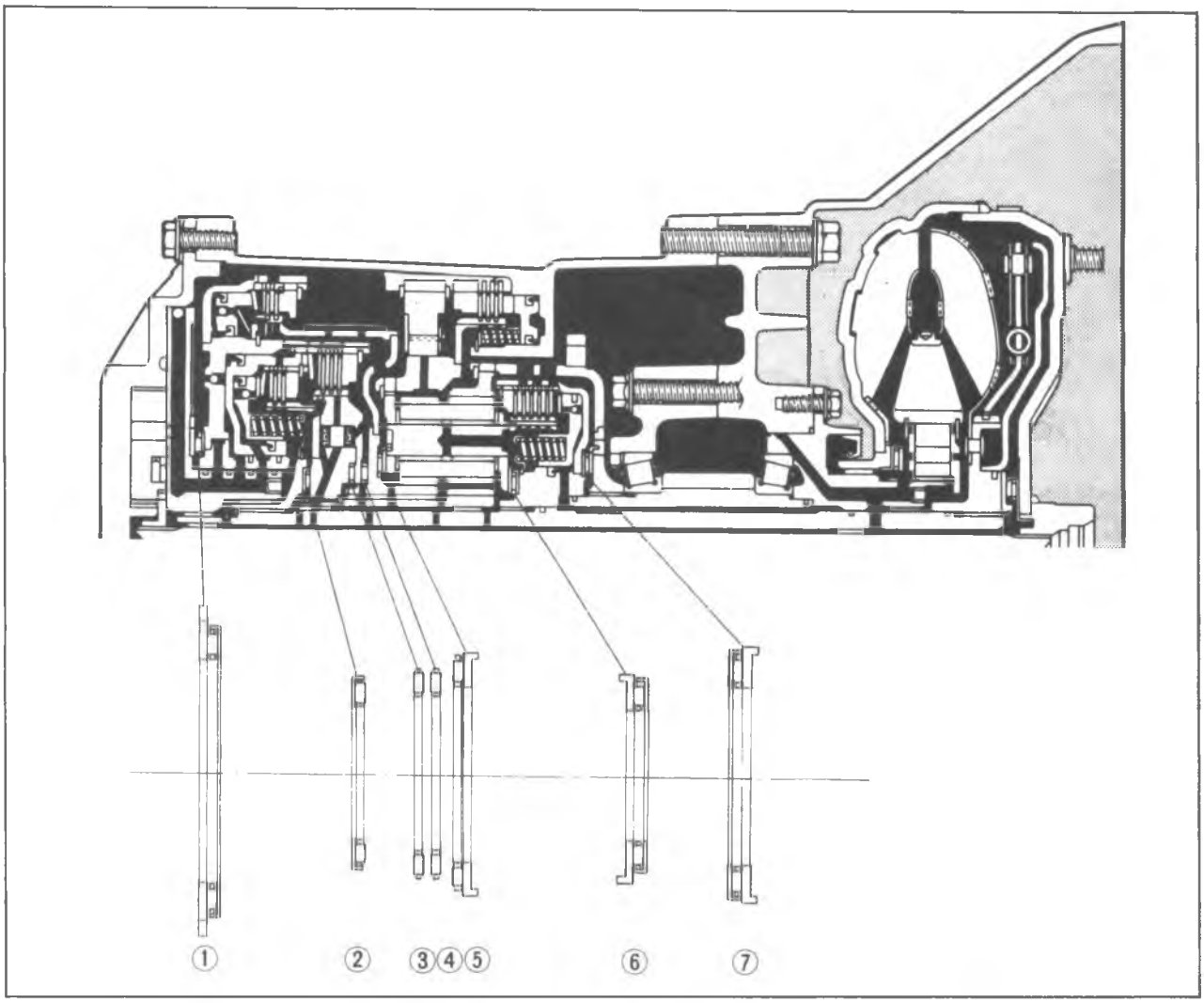

86U07B-380

Outer diameter of bearing and race

mm (in)

	1	2	3	4	5	6	7
Bearing	86.0 (3.39)	56.1 (2.21)	62.1 (2.44)	62.1 (2.44)	72.0 (2.83)	56.1 (2.21)	72.1 (2.84)
Race	88.0 (3.46)	—	—	—	72.0 (2.83)	57.0 (2.21	72.0 (2.83)

Note: Install with petroleum jelly to prevent the thrust bearing or bearing race from falling out.

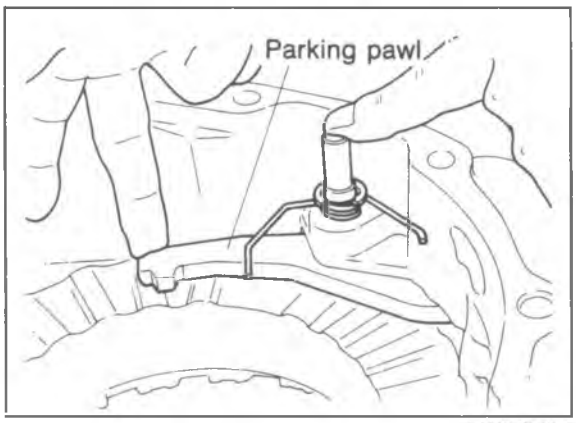

86U07B-381

Procedure

1. Install the parking pawl.
   (1) Install the parking pawl and shaft.
   (2) Install the spring and snap ring.
   (3) Move the manual shaft and check that the parking pawl operates.

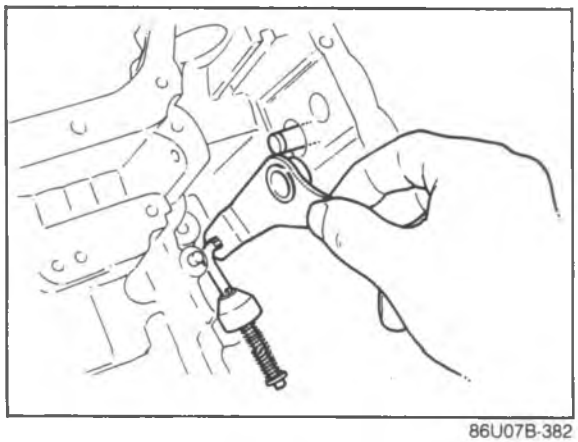

86U07B-382

2. Install the parking assist lever and snap ring

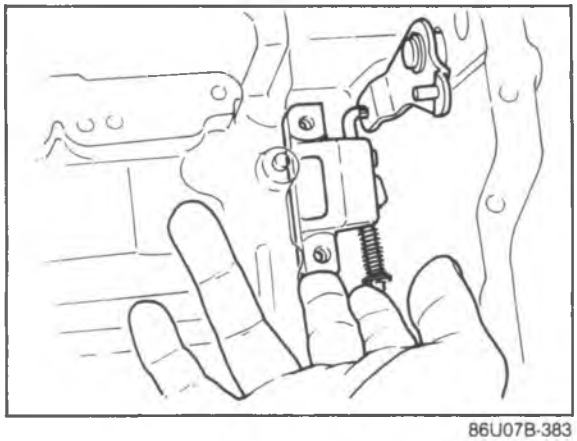

86U07B-383

3. Install the actuator support.

Tightening torque:
11—14 N·m (1.1—1.4 m-kg, 8.0—10 ft-lb)

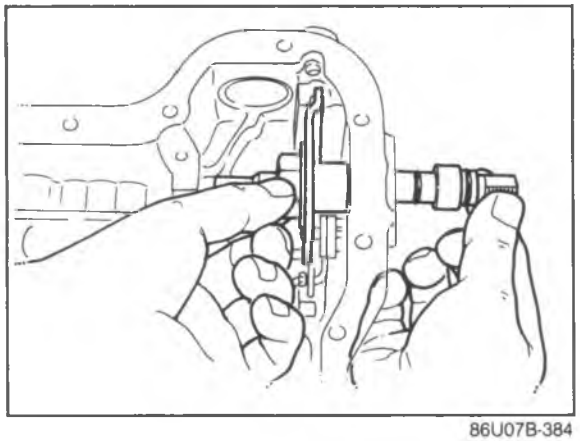

86U07B-384

4. Install the manual shaft and manual plate.
   (1) Install the manual plate, spacer, washer, and nut.
   (2) Tighten the nut to specified torque.

Tightening torque:
41—55 N·m (4.2—5.6 m-kg, 30—41 ft-lb)

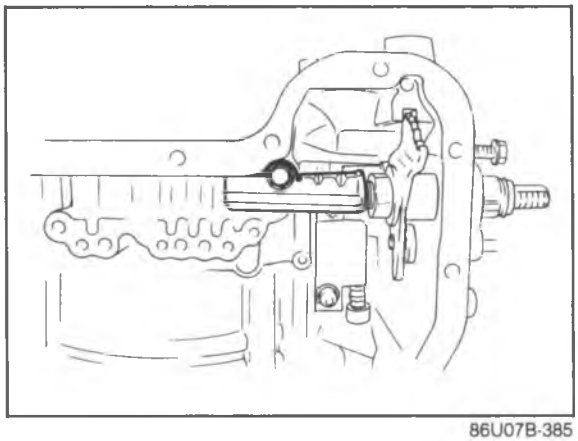

86U07B-385

(3) Install the bracket.

Tightening torque:
8—11 N·m (80—110 cm-kg, 69—95 in-lb)

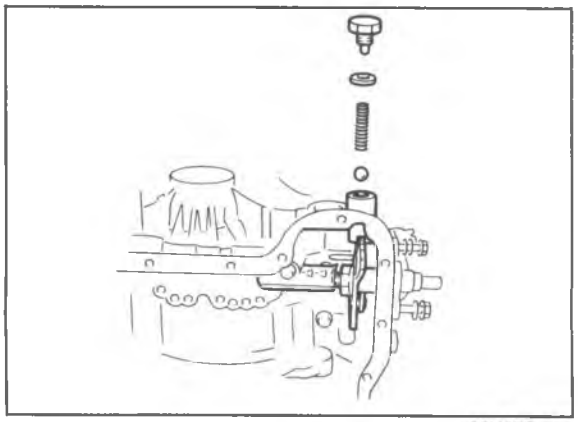

86U07B-386

(4) Install the detent ball, spring, washer and plug; then tighten the plug.

Tightening torque:
12—18 N·m (1.2—1.8 m-kg, 8.7—13 ft-lb)

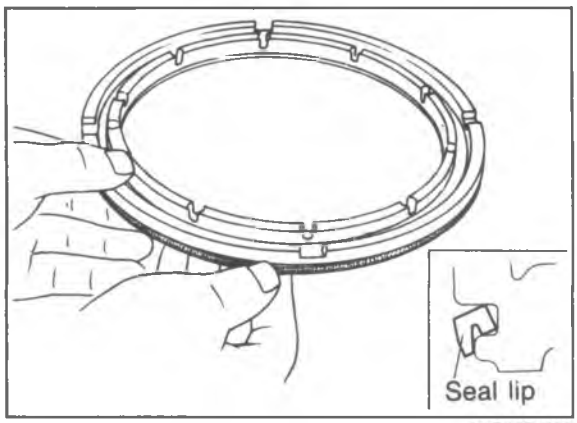

76G07B-730

5. Install the low and reverse brake piston.
   (1) Apply ATF to the inner and outer seals, and install them to the low and reverse brake piston.
   (2) Face the outer seal lip toward the inside by gently rolling it down around the circumference for easier installation into the case.

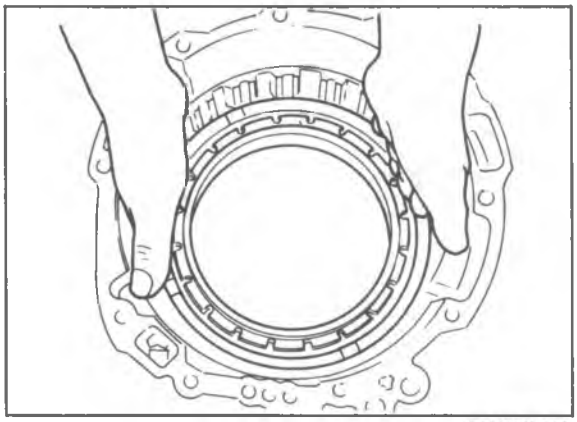

86U07B-388

(3) Install the low and reverse brake piston by pushing evenly around the circumference, being careful not to damage the outer seal.

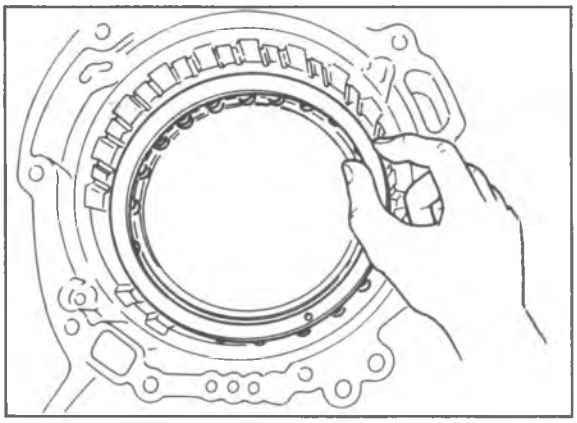

86U07B-389

(4) Install the spring and retainer assembly.

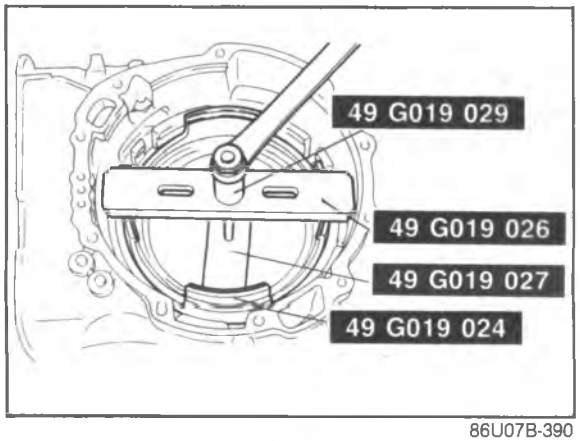

86U07B-390

(5) Install the **SST** in the case.
(6) Compress the spring and retainer assembly.
(7) Install the snap ring with snap ring pliers.
(8) Remove the **SST**.

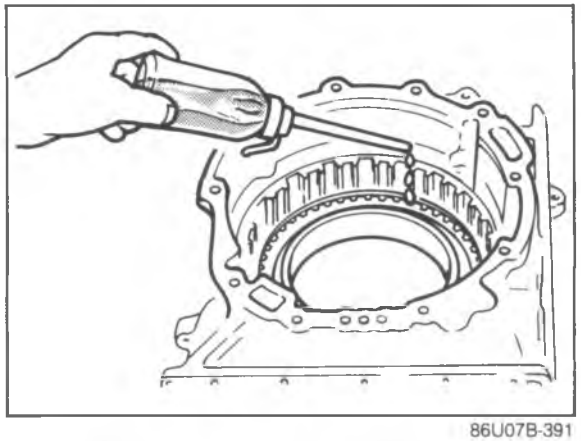
86U07B-391

6. Check the low and reverse brake piston operation.
   (1) Pour in ATF so that the low and reverse brake piston is fully submerged.
   (2) Check that no bubbles come from between the piston and seals when applying compressed air through the fluid passage. (Refer to page 7B—152)

Caution
The compressed air must be under 392 kPa (4.0 kg/cm^2, 57 psi) and not applied for over 3 seconds.

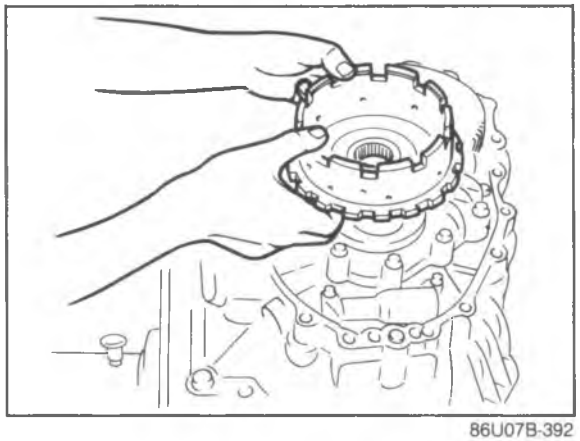
86U07B-392

7. Install the output shell to the output gear, and install the bearing race onto the output shell.

Bearing race outer diameter.
72.0 mm (2.83 in)

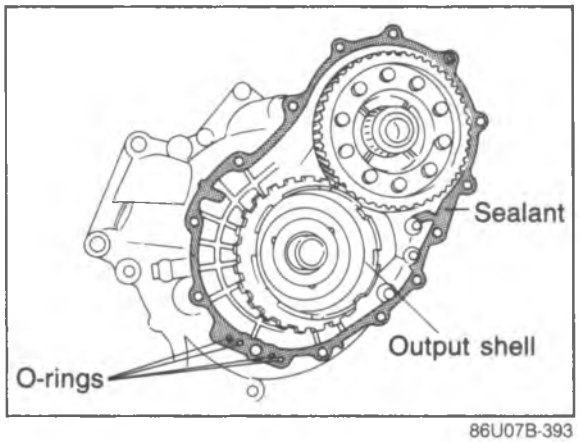

86U07B-393

8. Apply a thin coat of silicon sealant to the contact surfaces of the converter housing and transaxle case.
9. Install the O-rings.
10. Install the transaxle case to the converter housing.

Tightening torque:
37—52 N·m (3.8—5.3 m-kg, 27—38 ft-lb)

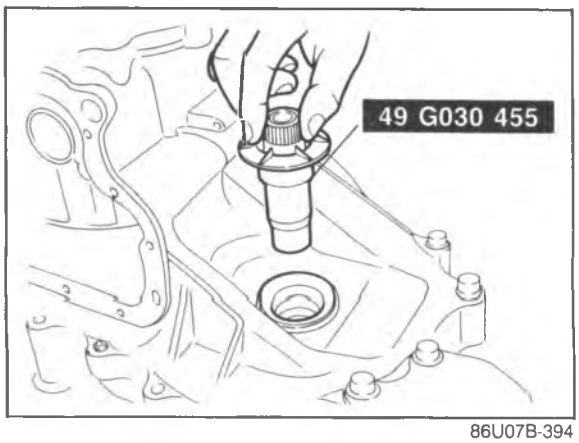

86U07B-394

11. Install the **SST** to the differential side gear.

Caution
Failure to install the SST may allow the differential side gears to become mispositioned.

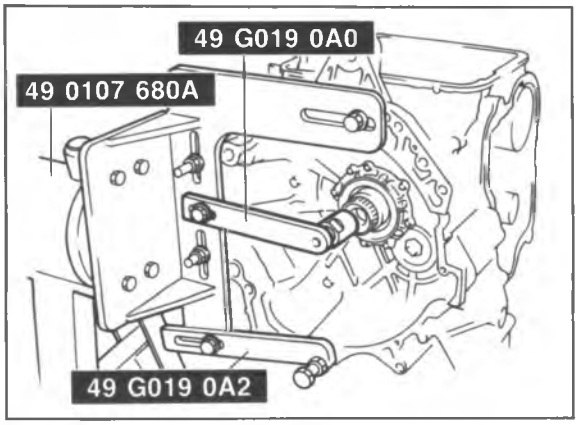

86U07B-395

ASSEMBLY-STEP 3
Procedure

1. Temporarily install the **SST** to hold the turbine shaft.

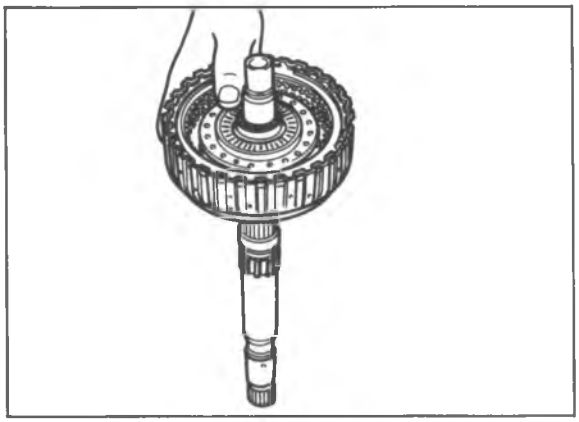

86U07B-396

2. Install the turbine shaft and 3-4 clutch assembly.
   (1) Assemble the turbine shaft and 3-4 clutch assembly.

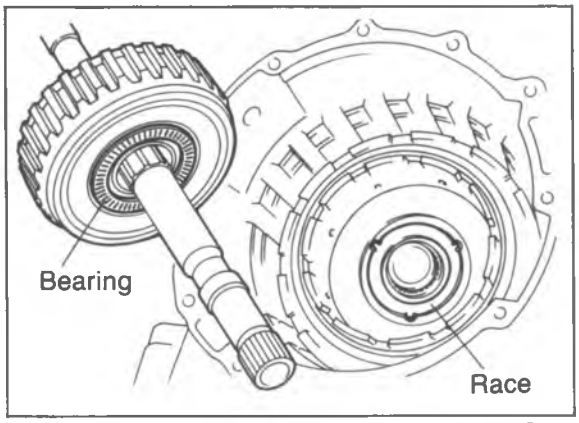

86U07B-397

   (2) Check that the thrust bearing and bearing race are installed in the correct position.
   (3) Install the turbine shaft and 3-4 clutch assembly into the transaxle case.

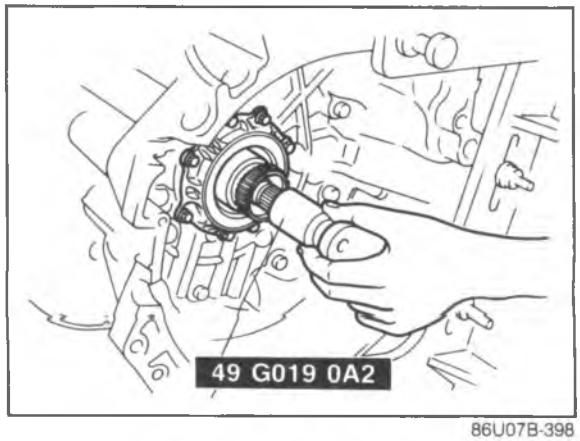

86U07B-398

3. Adjust the **SST** position so that it contacts and holds the turbine shaft.

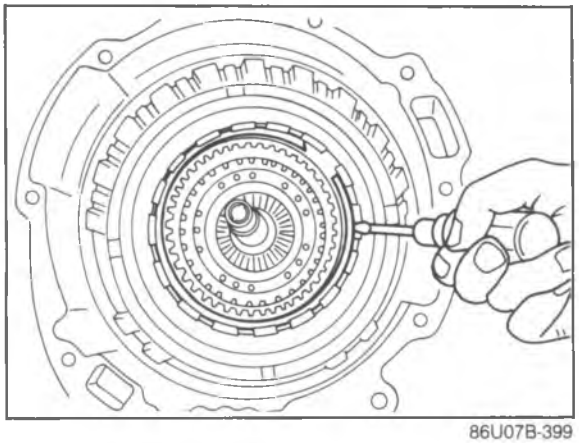

86U07B-399

4. Install the internal gear.
   (1) Install the internal gear to the 3-4 clutch drum.
   (2) Install the snap ring.

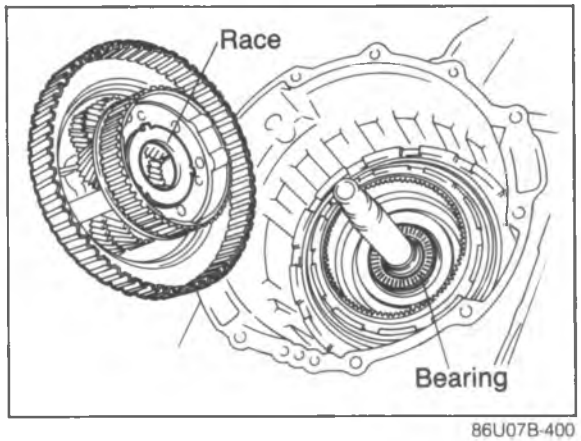

86U07B-400

5. Install the carrier hub assembly.
   (1) Check that the thrust bearing and bearing race are installed in the correct position.

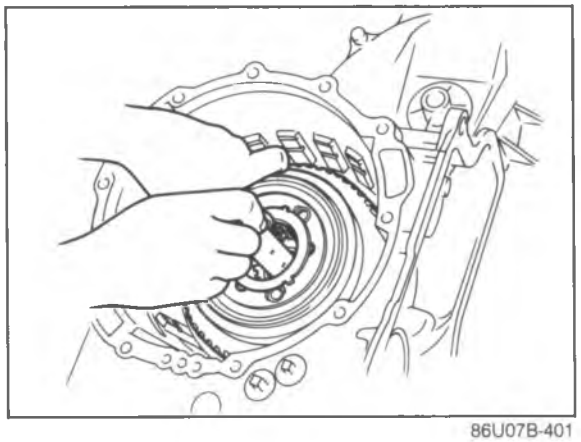

86U07B-401

   (2) Hold the turbine shaft with one hand to prevent it from rotating.
   (3) Install the carrier hub assembly into the 3-4 clutch drum by rotating it.

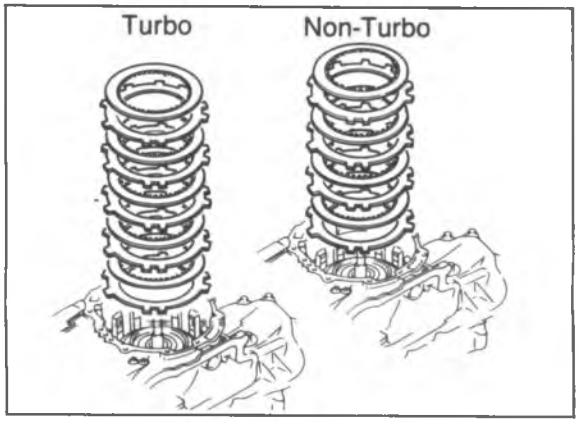

86U07B-402

6. Install the drive and driven plates.

Note
Installation order:
Non-Turbo
Driven-Drive-Driven-Drive-Driven-Drive-Driven-Drive
Turbo
Driven-Drive-Driven-Drive-Driven-Drive-Driven-Drive-Driven-Drive

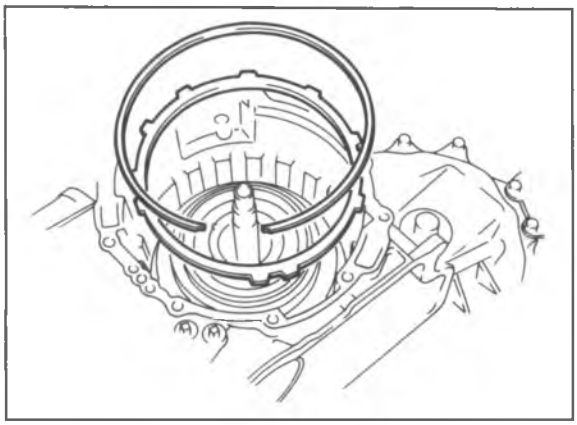

86U07B-403

7. Install the retaining plate.
8. Install the snap ring.

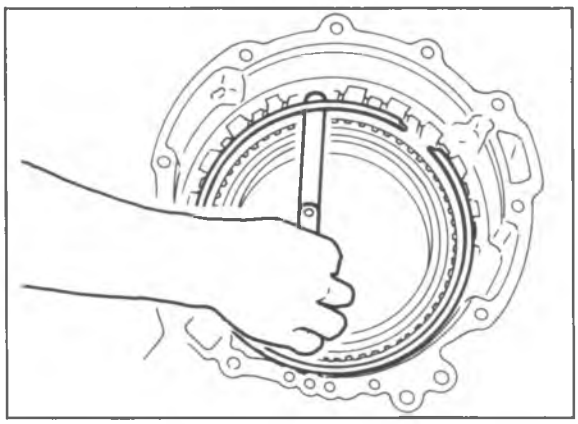

86U07B-404

9. Check the low and reverse brake clearance.
   (1) Measure the clearance between the snap ring and the low and reverse brake retaining plate.
   (2) If the clearance is not within specification, adjust it by selecting a proper retaining plate.

Low and reverse brake clearance:
2.1—2.4 mm (0.083—0.094 in)

Retaining plate sizes mm (in)

6.8 (0.268)	7.0 (0.276)	7.2 (0.283)
7.4 (0.291)	7.6 (0.299)	7.8 (0.307)

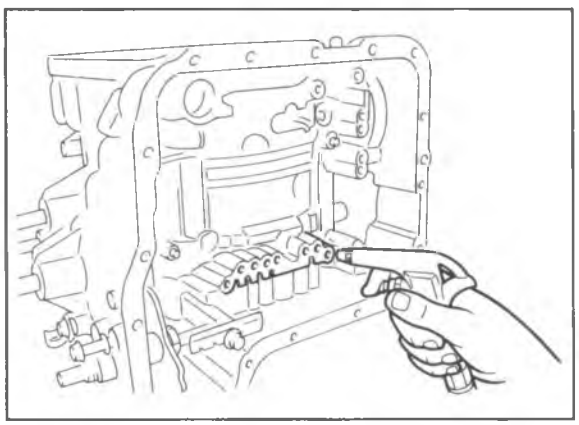

86U07B-405

10. Check the low and reverse brake operation by applying compressed air through the fluid passage as shown in the figure.

Air pressure:
392 kPa (4.0 kg/cm^2, 57 psi)

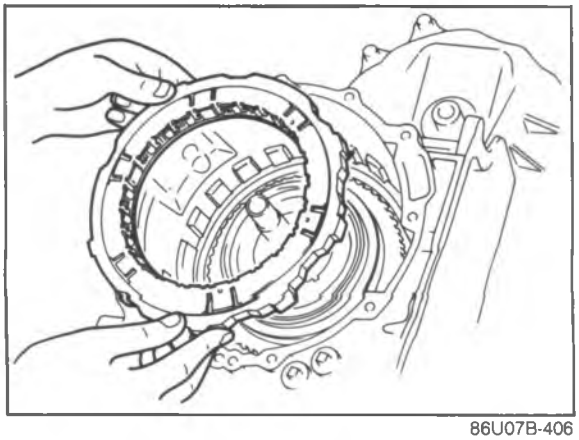

86U07B-406

11. Install the one-way clutch.
    (1) Hold the one-way clutch horizontally.
    (2) Install it by turning the carrier hub assembly counterclockwise.
    (3) Install the snap ring.

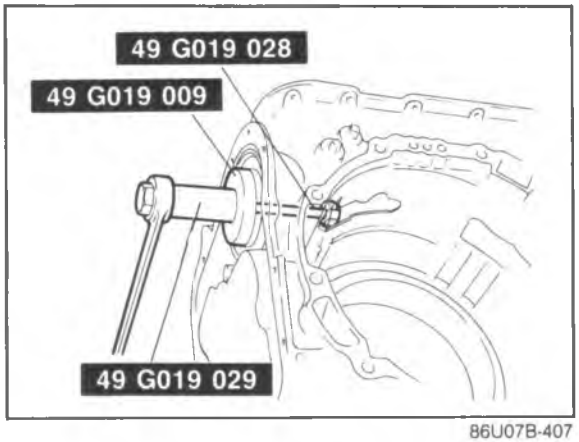

86U07B-407

12. Install the servo to the transaxle case.
    (1) Install the servo spring and servo.
    (2) Compress the servo with the **SST**.
    (3) Install the snap ring.
    (4) Remove the **SST**.
    (5) Install the piston stem.

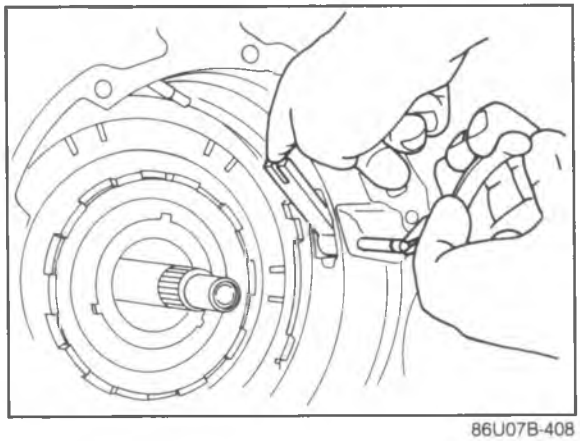

86U07B-408

13. Install the anchor strut.

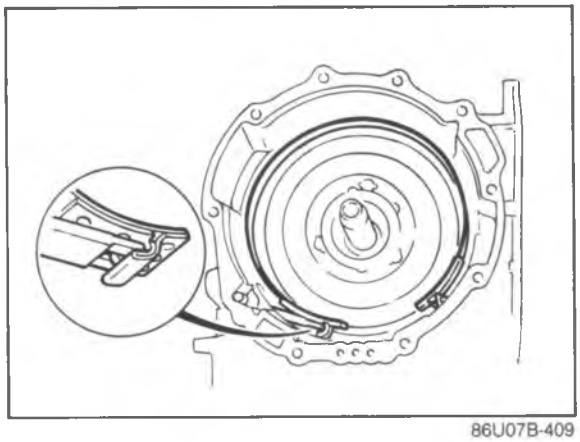

86U07B-409

14. Install the 2-4 brake band in the transaxle case so that it is expanded fully.

    Note
    Interlock the 2-4 brake band and anchor strut as shown.

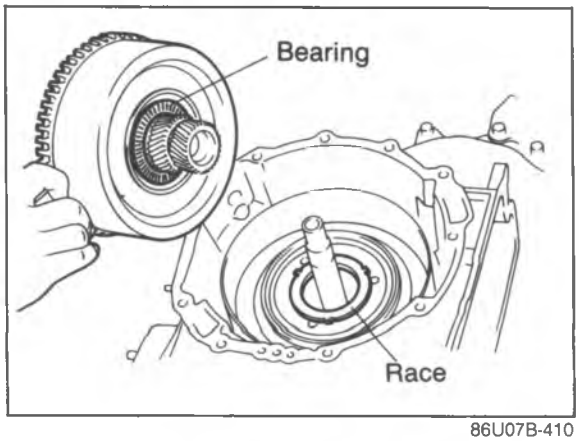

86U07B-410

15. Install the small sun gear and one-way clutch.
    (1) Check that the thrust bearing and bearing race are installed in the correct position.

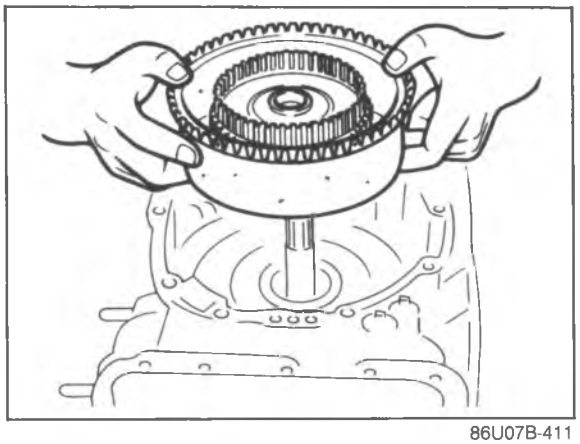
86U07B-411

    (2) Install the small sun gear and one-way clutch by rotating it.

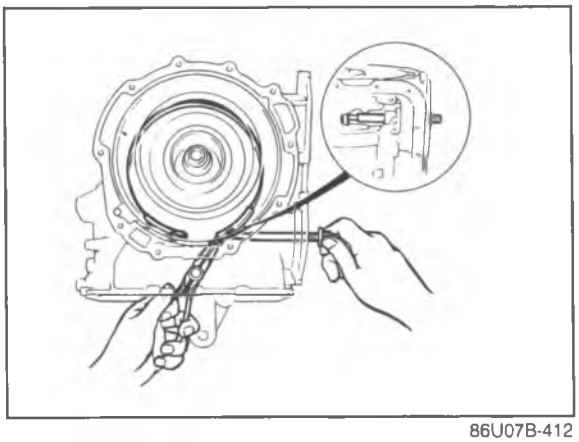
86U07B-412

16. Install the piston stem in the position while pulling out the 2-4 brake band with a pliers; then loosely tighten the piston stem by hand.

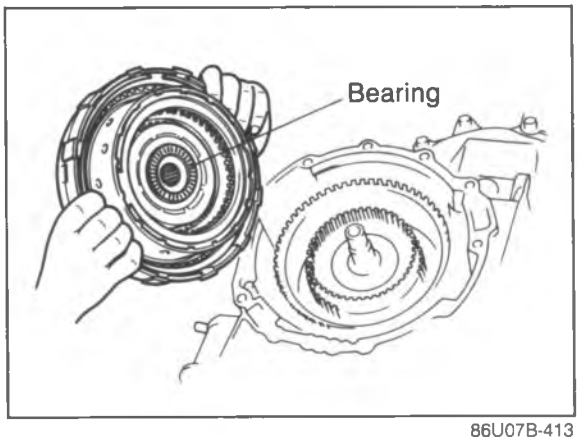

86U07B-413

17. Install the clutch assembly.
    (1) Check that the thrust bearing is installed in the correct position.

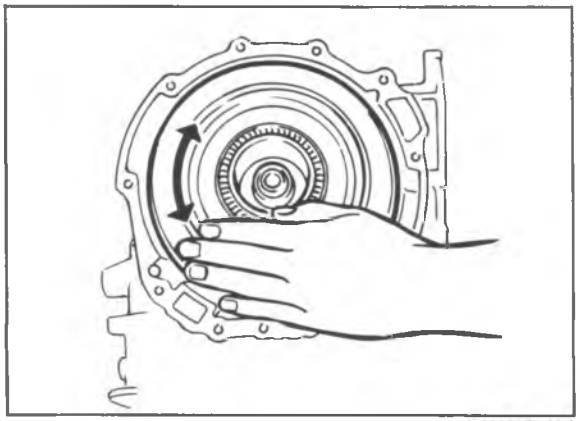

86U07B-414

(2) Install the clutch assembly by rotating it.

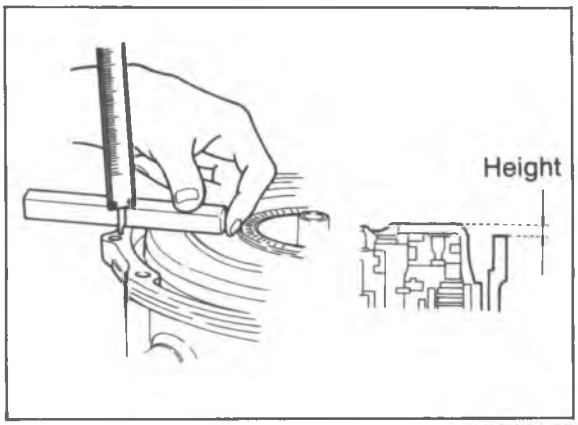

86U07B-415

Note
Measure the height difference between the reverse and forward drum and transaxle case.
Non-Turbo: 0.8 mm (0.032 in)
Turbo: 3.8 mm (0.151 in)

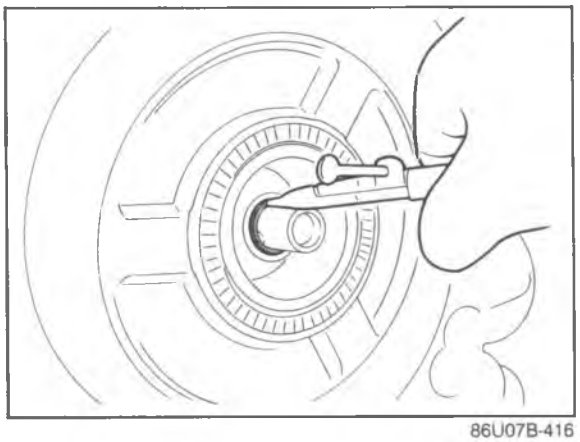

86U07B-416

17. Install the snap ring into the bottom ring groove of the turbine shaft.

ASSEMBLY-STEP 4
Torque Specifications

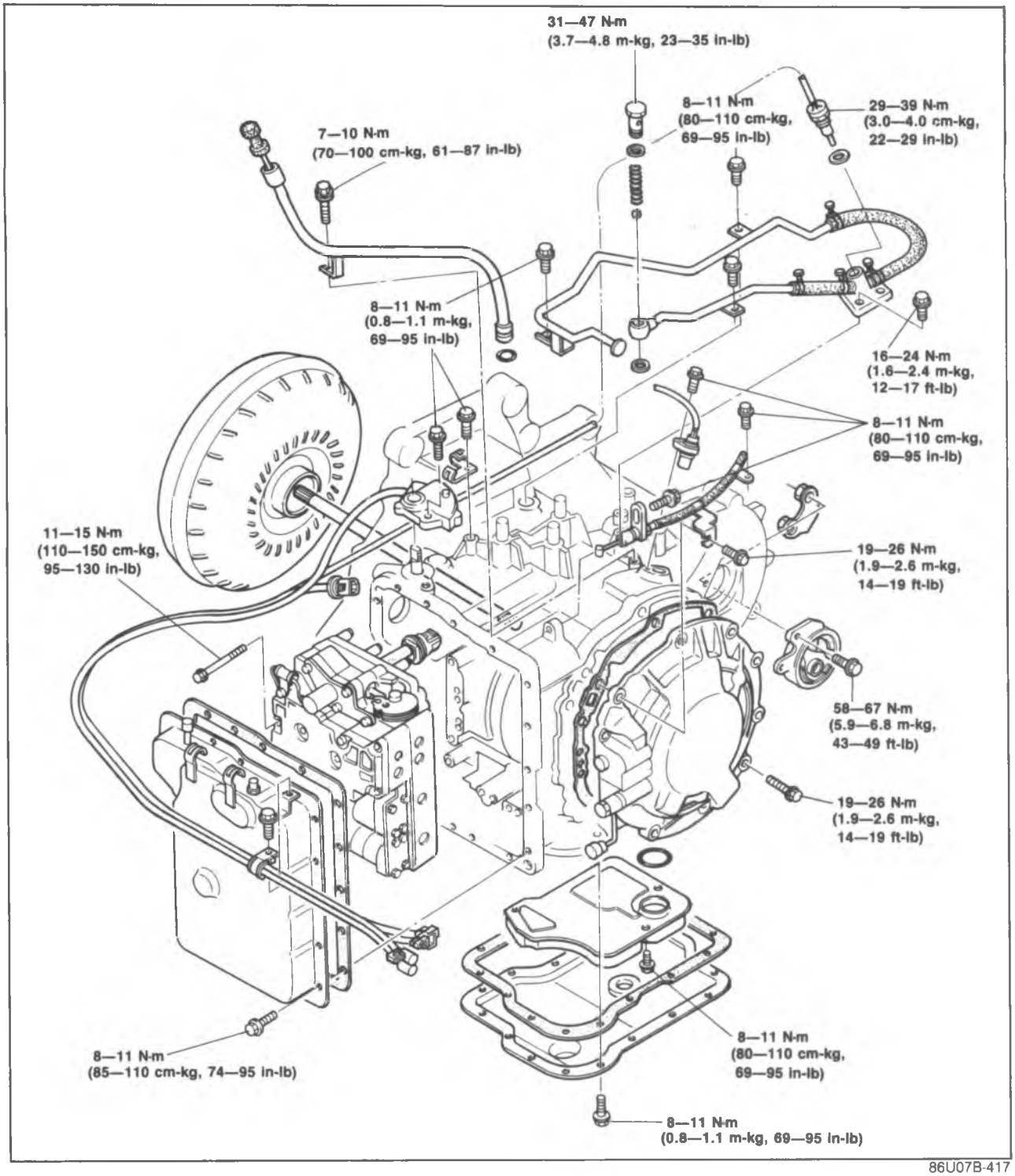

86U07B-417

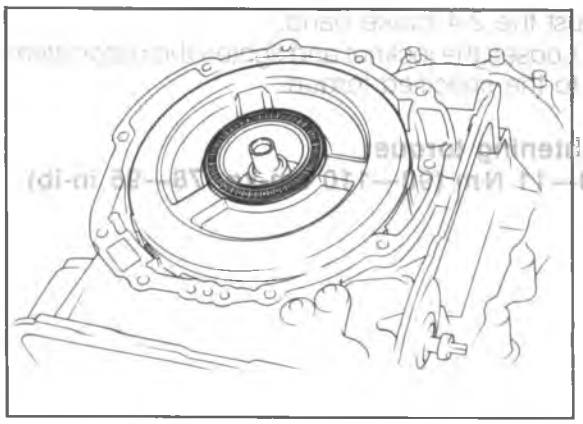

86U07B-418

Procedure

1. Use the following procedure to adjust the total end play and select a suitable bearing race.
   (1) Set the thrust bearing onto the clutch assembly.

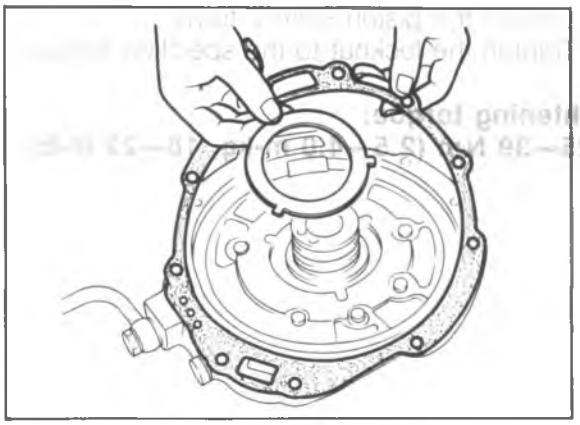

86U07B-419

   (2) Remove the previous race and gasket.
   (3) Set the thickest bearing race **2.2 mm (0.087 in)** onto the oil pump.
   (4) Set the oil pump onto the clutch assembly.

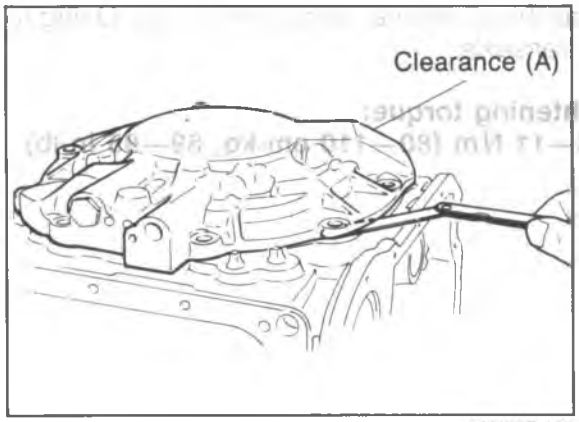

86U07B-420

   (5) Measure clearance A between the transaxle case and oil pump.
   (6) Select a suitable bearing race from the chart below.

Clearance A mm (in)	Select this bearing race mm (in)
0.91—1.10 (0.036—0.043)	1.2 (0.047)
0.71—0.90 (0.028—0.035)	1.4 (0.055)
0.51—0.70 (0.020—0.027)	1.6 (0.063)
0.31—0.50 (0.012—0.019)	1.8 (0.071)
0.11—0.30 (0.004—0.011)	2.0 (0.078)
0—0.10 (0—0.003)	2.2 (0.087)

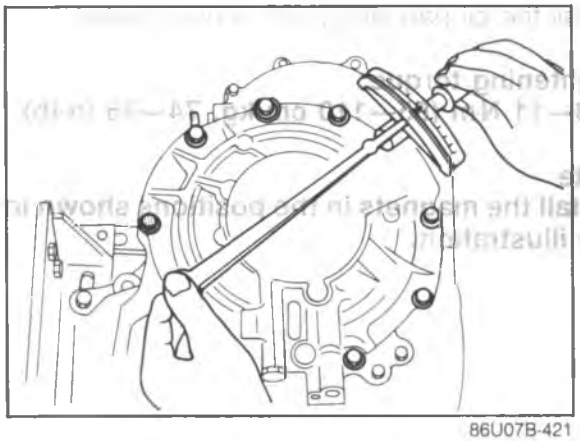

86U07B-421

   (7) Remove the oil pump.
   (8) Place the selected bearing race and a new gasket onto the oil pump.
   (9) Install the oil pump onto the clutch assembly.

Tightening torque:
19—26 N·m (1.9—2.6 m-kg, 14—19 ft-lb)

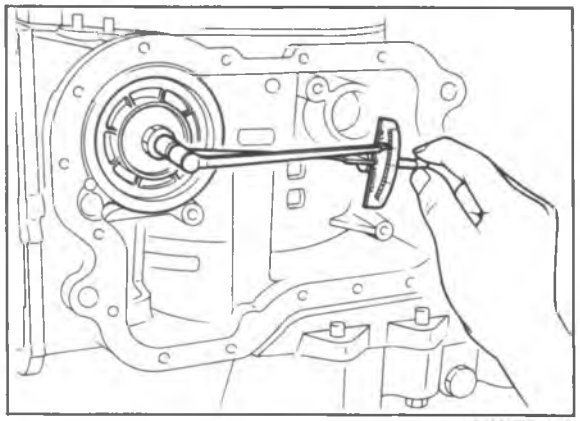

86U07B-422

2. Adjust the 2-4 brake band.
   (1) Loosen the locknut and tighten the piston stem to the specified torque.

Tightening torque:
9—11 N·m (90—110 cm-kg, 78—95 in-lb)

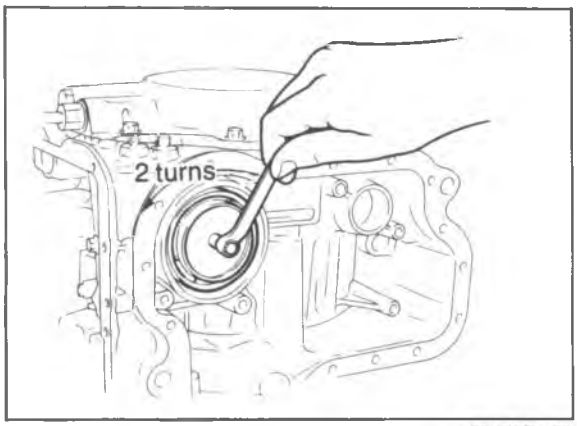

86U07B-423

   (2) Loosen the piston stem 2 turns.
   (3) Tighten the locknut to the specified torque.

Tightening torque:
25—39 N·m (2.5—4.0 m-kg, 18—29 ft-lb)

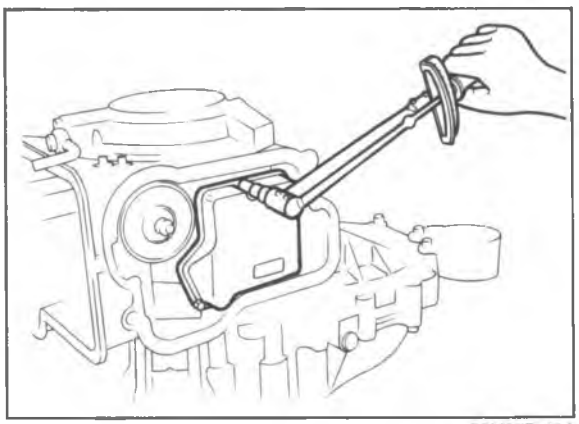

86U07B-424

3. Install the oil strainer along with a new O-ring to the transaxle.

Tightening torque:
8—11 N·m (80—110 cm-kg,. 69—95 in-lb)

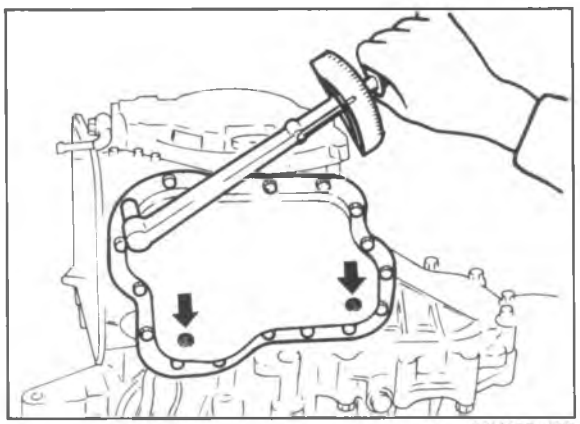

86U07B-425

4. Install the oil pan along with a new gasket.

Tightening torque:
8—11 N·m (85—110 cm-kg, 74—95 in-lb)

Note
Install the magnets in the positions shown in the illustration.

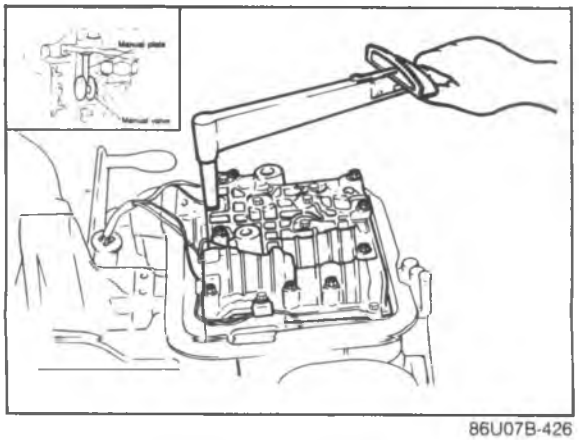

86U07B-426

5. Align the manual valve with the pin on the manual plate, and install the control valve body into the transaxle case.

Tightening torque:
11—15 N·m
(110—150 cm-kg, 95—130 in-lb)

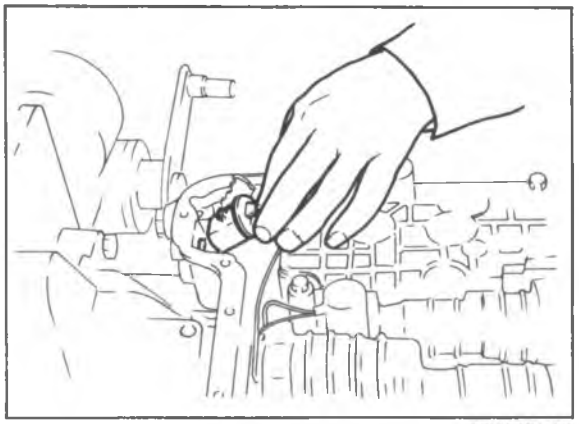

86U07B-427

6. Install the solenoid connector and a new O-ring in the transaxle case.

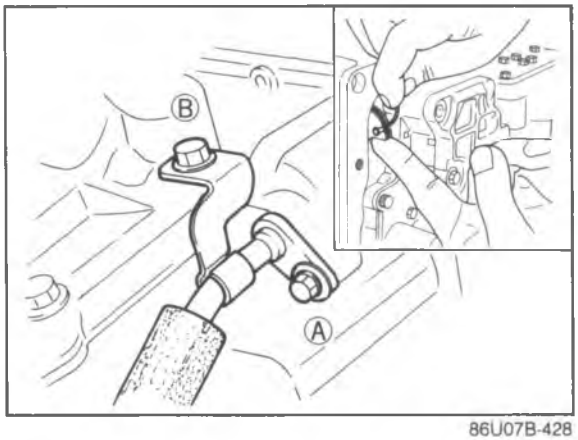

86U07B-428

7. Install a new O-ring on the bracket; then feed the throttle cable through the transaxle case and connect it to the throttle cam.
8. Install the throttle cable attaching bolts and bracket.

Tightening torque:
Ⓐ 8—11 N·m
(80—110 cm-kg, 69—95 in-lb)
Ⓑ 19—26 N·m
(1.9—2.6 m-kg, 14—19 ft-lb)

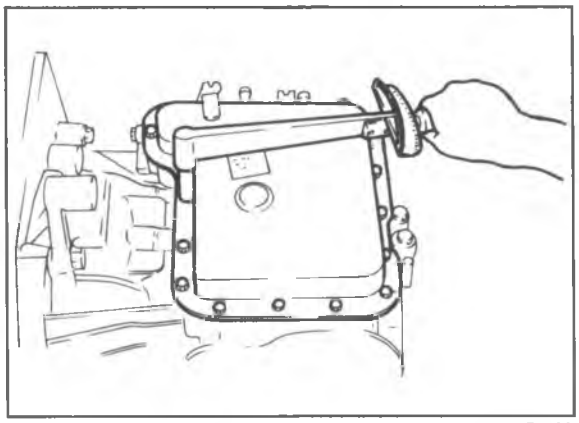

86U07B-429

9. Install the control valve body cover along with a new gasket.

Tightening torque:
8—11 N·m (85—110 cm-kg, 74—95 in-lb)

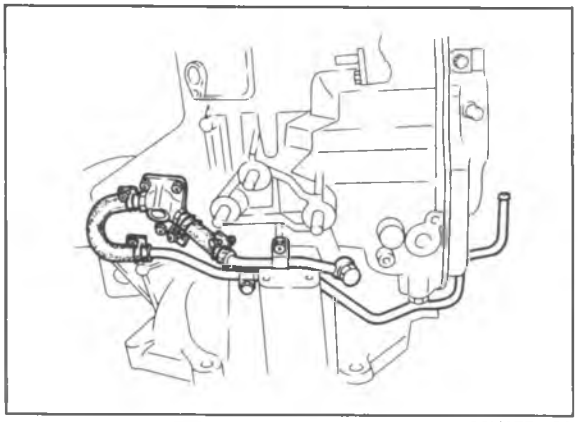

86U07B-430

10. Install the oil pipes, oil hoses, and switch box as an assembly; then install the harness clip.

Tightening torque:
Switch box
16—24 N·m (1.6—2.4 m-kg, 12—17 ft-lb)
Harness clip
8—11 N·m (80—110 cm-kg, 69—95 in-lb)

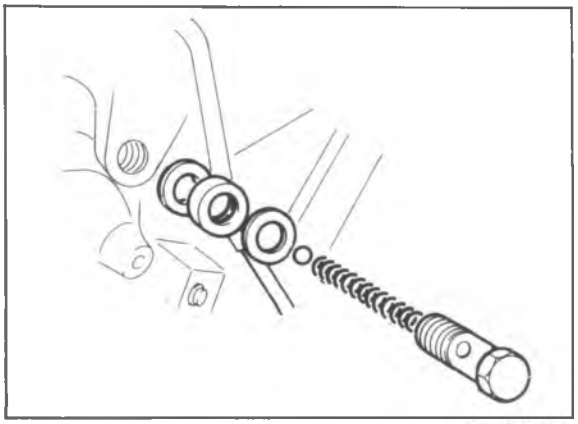

86U07B-431

11. Install the ball, spring, gasket, and a plug.

Tightening torque:
31—47 N·m (3.2—4.8 m-kg, 23—35 ft-lb)

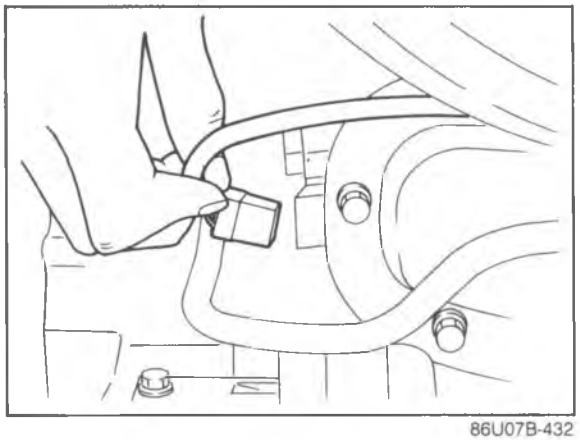

86U07B-432

12. Install the solenoid connector.

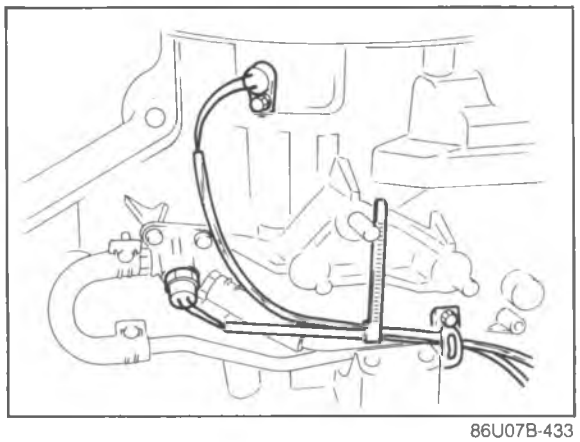

86U07B-433

13. Install the pulse generator and fluid temperature switch.

Tightening torque:
Pulse generator
8—11 N·m (80—110 cm-kg, 69—95 in-lb)
Fluid temperature switch
29—39 N·m (3.0—4.0 m-kg, 22—29 in-lb)

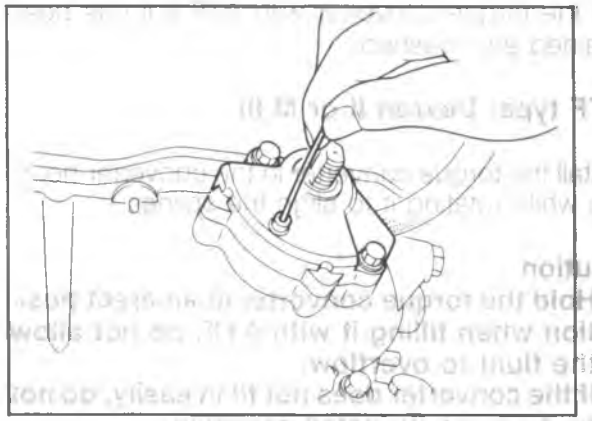

86U07B-434

14. Install the inhibitor switch.
    (1) Turn the manual shaft to the "N" position.
    (2) Install the inhibitor switch and loosely tighten the bolts.
    (3) Remove the screw and move the inhibitor switch so that the alignment hole is aligned with the screw hole.
    (4) Insert a **2.0 mm (0.079 in)** diameter pin through the holes.
    (5) Install the screw; then tighten the bolts to the specified torque.

Tightening torque:
8—11 N·m (80—110 cm-kg, 69—95 in-lb)

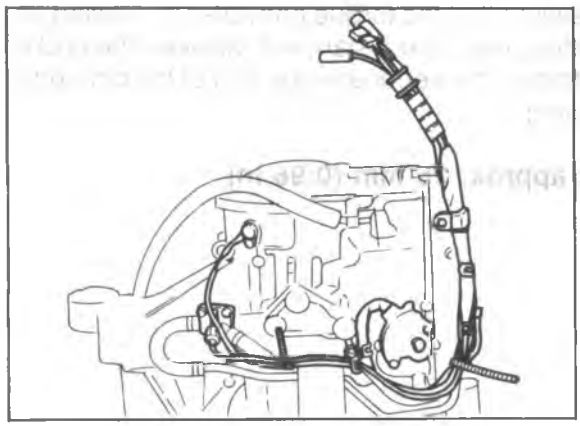

86U07B-435

15. Install the harness with the remaining clip.

Tightening torque:
8—11 N·m (80—110 cm-kg, 69—95 in-lb)

16. Remove the transaxle from the **SST**.

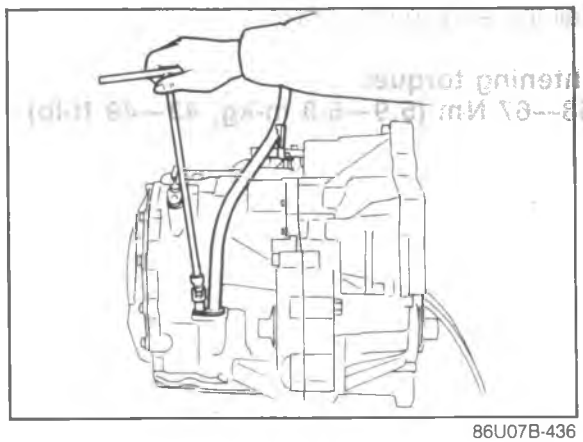

86U07B-436

17. Install the oil level gauge and tube along with a new O-ring to the transaxle case.

Tightening torque:
7—10 N·m (70—100 cm-kg, 61—87 in-lb)

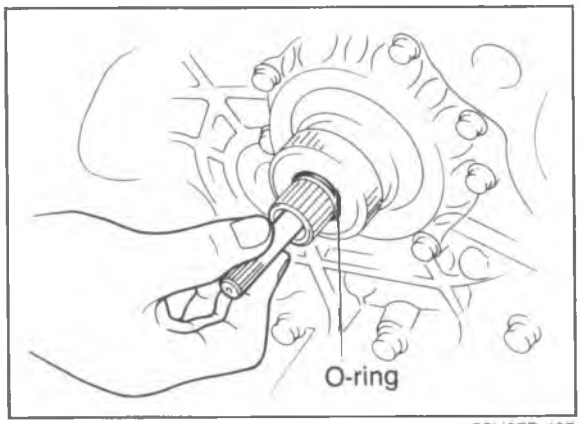

86U07B-437

18. Install the oil pump shaft.
19. Install a new O-ring onto the turbine shaft.

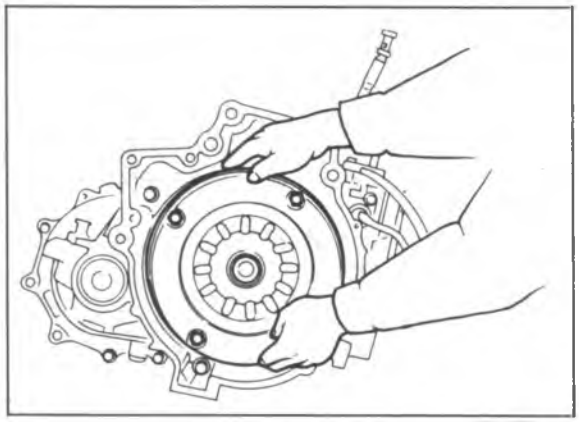

86U07B-438

20. Fill the torque converter with ATF if it has been drained and washed.

    ATF type: Dexron II or M III

21. Install the torque converter in the converter housing while rotating it to align the splines.

    Caution
    a) Hold the torque converter in an erect position when filling it with ATF, do not allow the fluid to overflow.
    b) If the converter does not fit in easily, do not try to force it; install carefully.

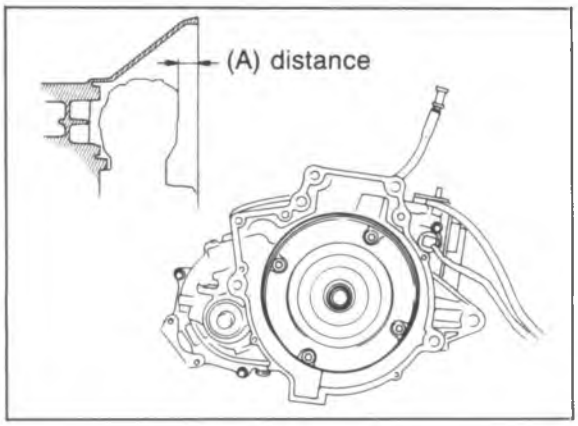

86U07B-439

22. To ensure that the torque converter is installed accurately, measure distance A between the end of the torque converter and the end of the converter housing.

    (A): approx. 25 mm (0.98 in)

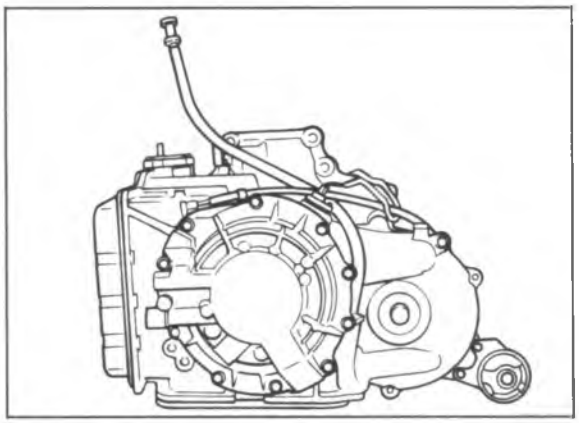

86U07B-482

23. Install the engine mount No.1

    Tightening torque:
    58—67 N·m (5.9—6.8 m-kg, 43—49 ft-lb)

INSTALLATION

TORQUE SPECIFICATIONS

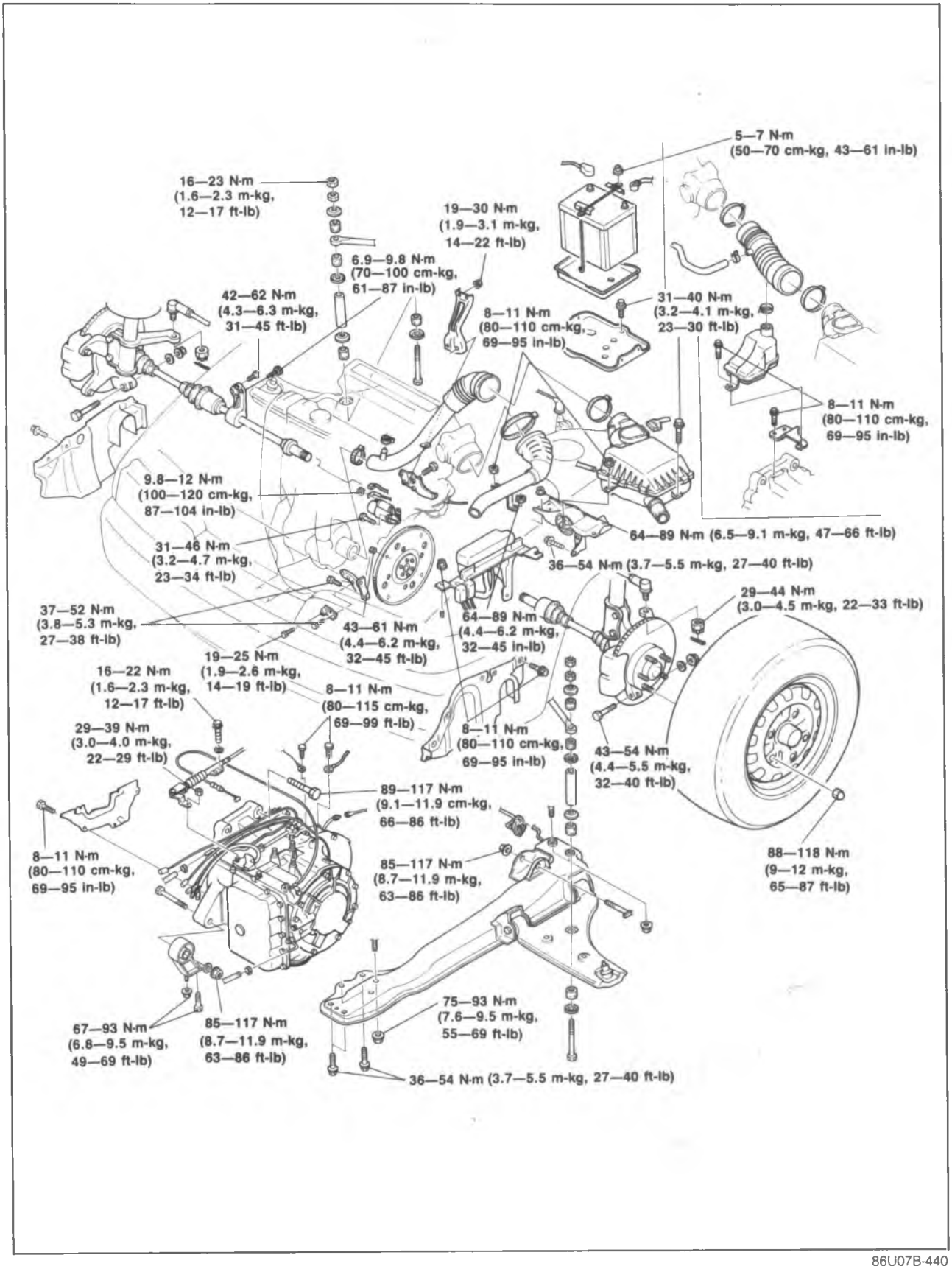

86U07B-440

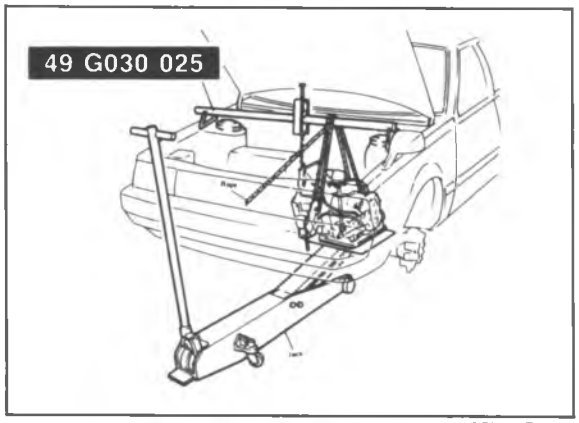

86U07B-441

1. Attach rope at 2 places on the transaxle. Place a flat board on a jack and set the transaxle on it.

   Caution
   The transaxle is not well balanced; be careful when positioning it on the jack.

2. Move the transaxle into place and attach the rope to the **SST**.

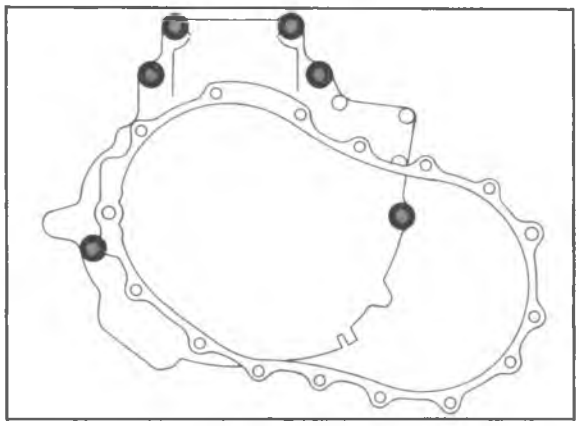

86U07B-442

3. Mount the transaxle to the engine.

   Tightening torque:
   89—117 N·m (9.1—11.9 m-kg, 66—86 ft-lb)

   Note
   a) Lift the transaxle with the jack while pulling the rope.
   b) Align the torque converter bolts and drive plate holes.

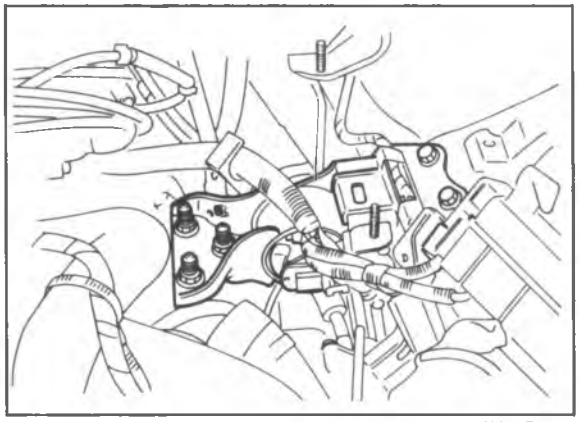

86U07B-443

4. Install engine mount No. 4 and bracket.

   Tightening torque:
   Bolt
   36—54 N·m (3.7—5.5 m-kg, 27—40 ft-lb)
   Nut
   64—89 N·m (6.5—9.1 m-kg, 47—66 ft-lb)

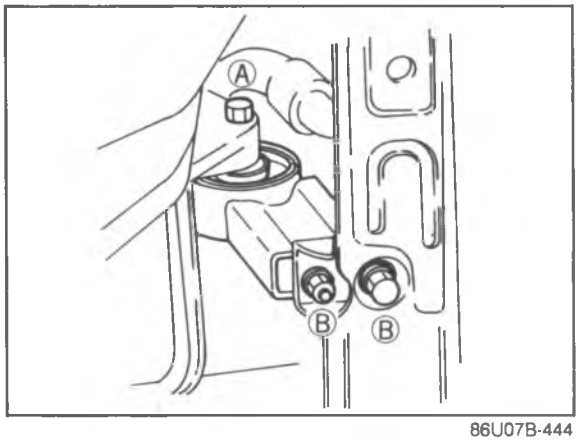

86U07B-444

5. Install engine mount No. 2.

   Tightening torque:
   Ⓐ 85—117 N·m
   (8.7—11.9 m-kg, 63—86 ft-lb)
   Ⓑ 67—93 N·m
   (6.8—9.5 m-kg, 49—69 ft-lb)

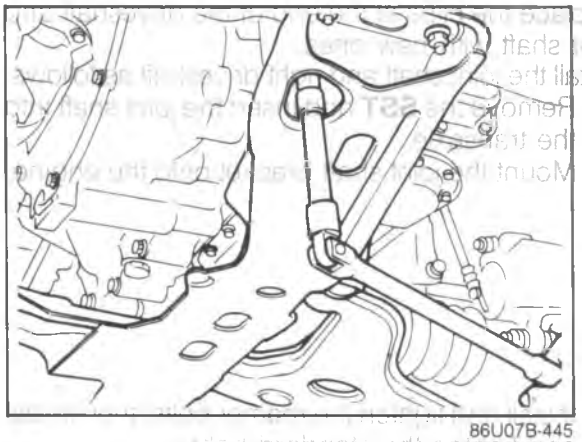

86U07B-445

6. Install the crossmember and the left side lower arm as an assembly.

Tightening torque:
Bolt
36—54 N·m (3.7—5.5 m-kg, 27—40 ft-lb)
Nut
75—93 N·m (7.6—9.5 m-kg, 55—69 ft-lb)

7. Install the jack and the rope.
8. Remove the **SST**.

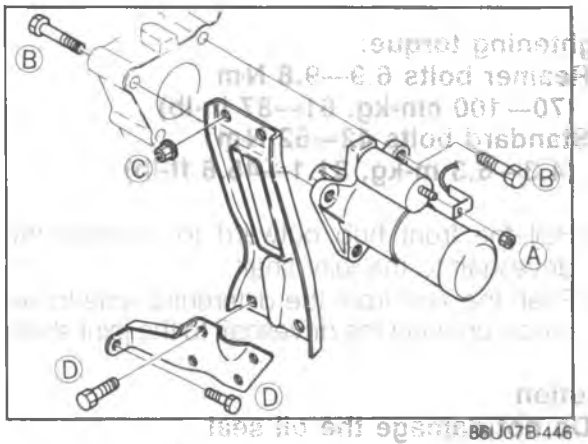

86U07B-446

9. Install the starter and harnesses.

Tightening torque:
Ⓐ 9.8—12 N·m
(100—120 cm-kg, 87—104 in-lb)
Ⓑ 31—46 N·m
(3.2—4.7 m-kg, 23—34 ft-lb)

10. Install the manifold bracket.

Tightening torque:
Ⓒ 19—30 N·m
(1.9—3.1 m-kg, 14—22 ft-lb)
Ⓓ 37—52 N·m
(3.8—5.3 m-kg, 27—38 ft-lb)

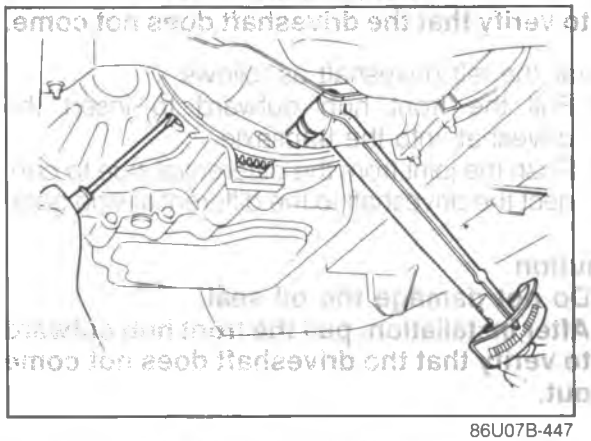

86U07B-447

11. Install the torque converter nuts.

Tightening torque:
43—61 N·m (4.4—6.2 m-kg, 32—45 ft-lb)

12. Install the end plate.

Tightening torque:
8—11 N·m (80—110 cm-kg, 69—95 in-lb)

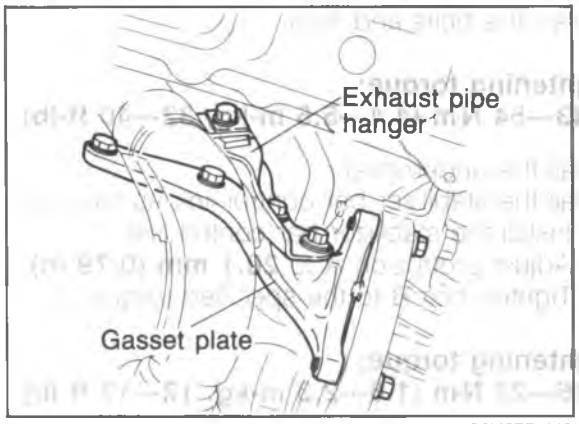

86U07B-448

13. Install the gusset plates and exhaust pipe hanger.

Tightening torque:
Gasset plate
37—52 N·m (3.8—5.3 m-kg, 27—38 ft-lb)
Exhaust pipe hanger
19—25 N·m (1.9—2.6 m-kg, 14—19 ft-lb)

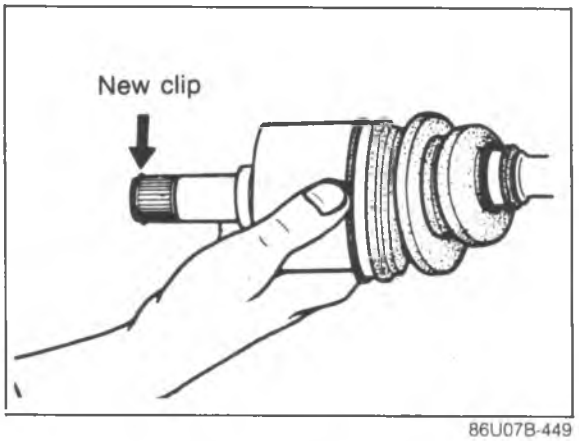

86U07B-449

14. Replace the clips at the end of the driveshaft and joint shaft with new ones.
15. Install the joint shaft and right driveshaft as follows:
    (1) Remove the **SST** and insert the joint shaft into the transaxle.
    (2) Mount the joint shaft bracket onto the engine.

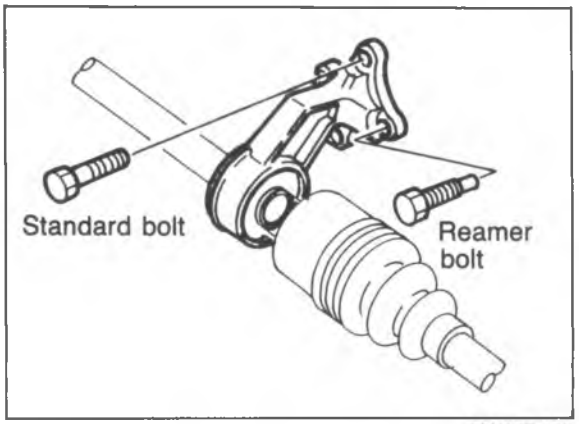

86U07B-450

(3) Install and tighten the reamer bolts; then install and tighten the standard bolts.

Tightening torque:
Reamer bolts 6.9—9.8 N·m (70—100 cm-kg, 61—87 in-lb)
Standard bolts 42—62 N·m (4.3—6.3 m-kg, 31.1—45.6 ft-lb)

(4) Pull the front hub outward to connect the driveshaft to the joint shaft.
(5) Push the joint from the differential side to securely connect the driveshaft to the joint shaft.

Caution
a) Do not damage the oil seal.
b) After installation, pull the front hub outward to verify that the driveshaft does not come.

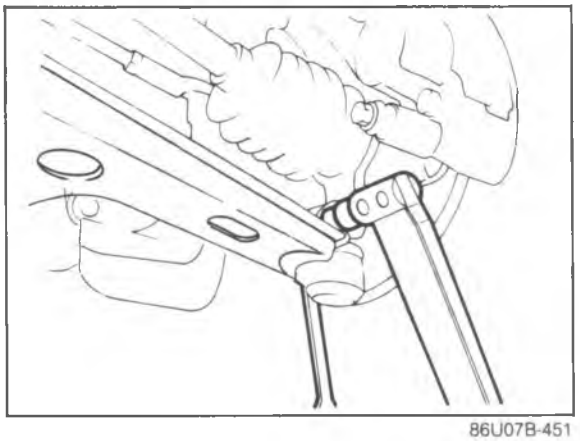

86U07B-451

16. Install the left driveshaft as follows:
    (1) Pull the front hub outward to insert the driveshaft into the transaxle.
    (2) Push the joint from the differential side to connect the driveshaft to the differential side gear.

Caution
a) Do not damage the oil seal.
b) After installation, pull the front hub outward to verify that the driveshaft does not come out.

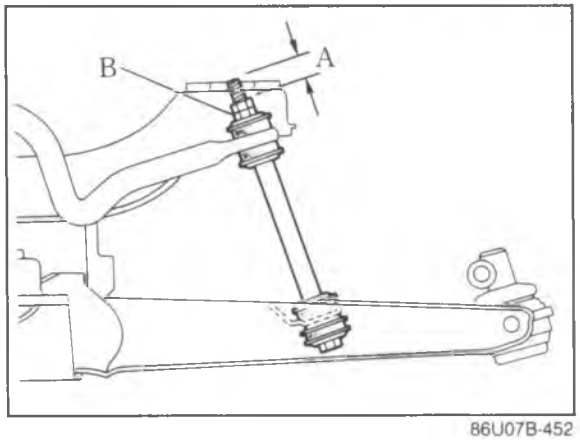

86U07B-452

17. Install the lower arm ball joints to the knuckles and tighten the bolts and nuts.

Tightening torque:
43—54 N·m (4.4—5.5 m-kg, 32—40 ft-lb)

18. Install the undercover.
19. Install the stabilizer bar control link as follows:
    (1) Install the stabilizer bar control link.
    (2) Adjust protrusion A to **20.1 mm (0.79 in)**.
    (3) Tighten bolt B to the specified torque.

Tightening torque:
16—23 N·m (1.6—2.3 m-kg, 12—17 ft-lb)

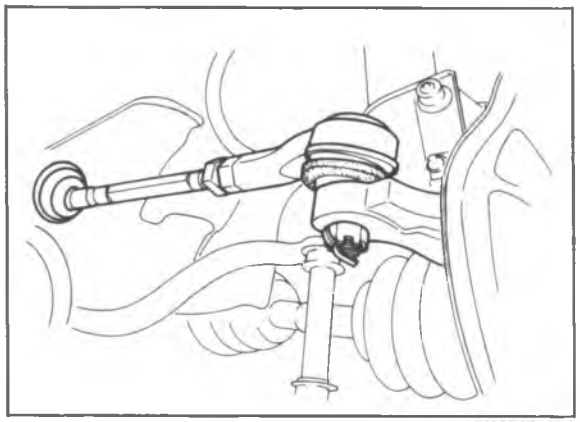

86U07B-453

20. Install the tie-rod ends and cotter pins.

Tightening torque:
29—44 N·m (3.0—4.5 m-kg, 22—3 ft-lb)

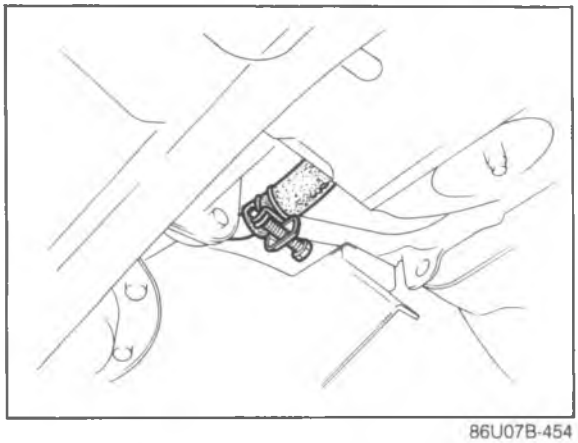

86U07B-454

21. Install the oil cooler outlet and inlet hoses.
22. Install the splash shields.

Tightening torque:
8—11 N·m (80—110 cm-kg, 69—95 in-lb)

23. Install the front wheels.

Tightening torque:
88—118 N·m (9—12 m-kg, 65—87 ft-lb)

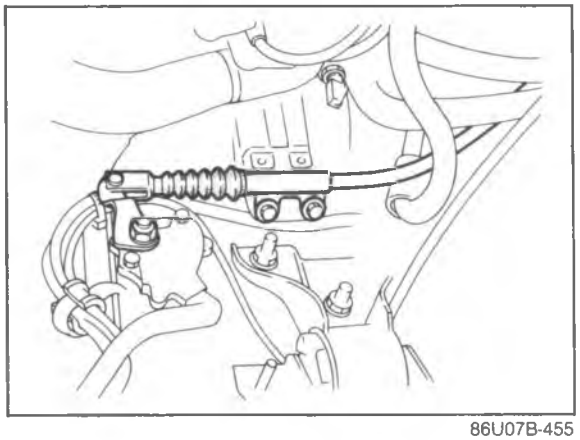

86U07B-455

24. Connect the throttle cable.

Note
Adjust the throttle cable with the oil pressure test. (Refer to page 7B—52)

25. Connect the selector cable.

Tightening torque:
Nut
29—39 N·m (3.0—4.0 m-kg, 22—29 ft-lb)
Bolts
16—22 N·m (1.6—2.3 m-kg, 12—17 ft-lb)

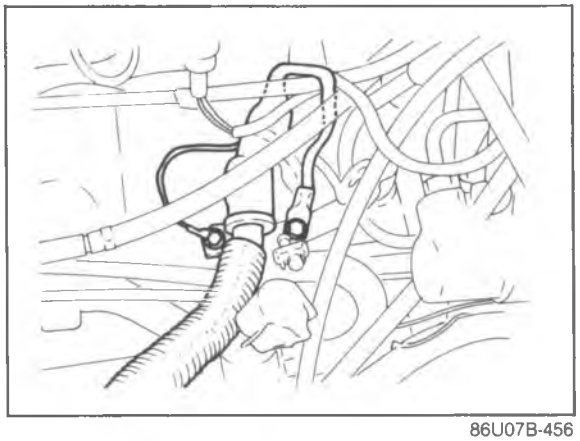

86U07B-456

26. Connect the ground wires to the transaxle case.

Tightening torque:
8—11 N·m (80—115 cm-kg, 69—99 in-lb)

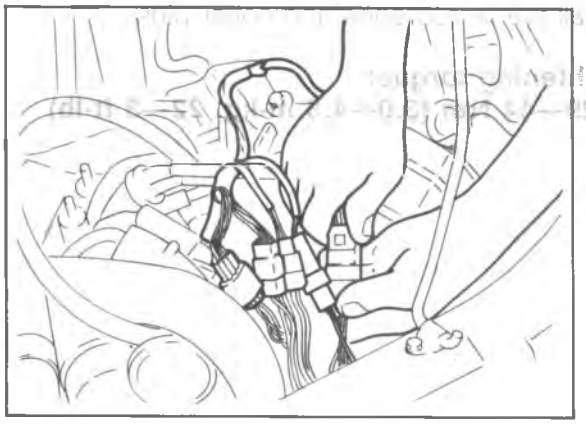

86U07B-457

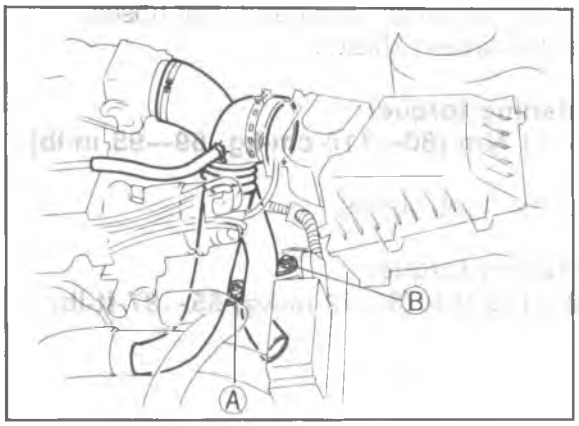

86U07B-458

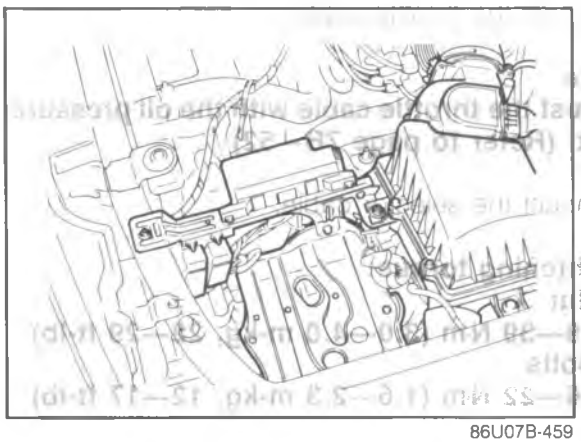

86U07B-459

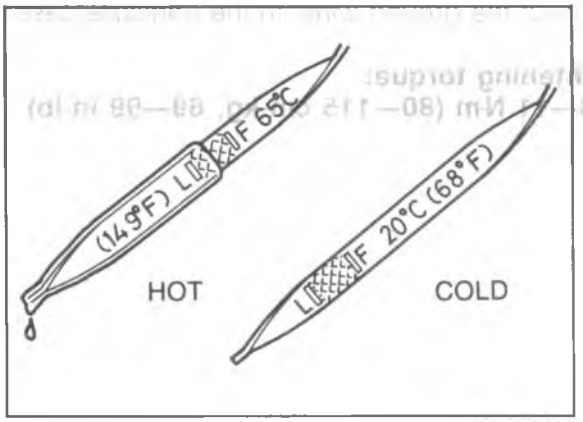

86U07B-460

27. Connect the EC-AT connectors as follows:
    (1) Inhibitor switch
    (2) Solenoid valve
    (3) Pulse generator
    (4) Fluid temperature switch
28. Connect the speedometer cable.
29. Install the intercooler hoses as follows: (Turbo)
    (1) Air cleaner to turbocharger
    (2) Intercooler to throttle body.

    Tightening torque:
    Ⓐ 8—11 N·m (80—110 cm-kg, 69—95 in-lb)
    Ⓑ 64—89 N·m (6.5—9.1 m-kg, 47—66 ft-lb)

30. Install the resonance chamber bracket.

    Tightening torque:
    8—11 N·m (80—110 cm-kg, 69—95 in-lb)

31. Install the resonance chamber, and air cleaner hose.

    Tightening torque:
    8—11 N·m (80—110 cm-kg, 69—95 in-lb)

32. Install the air cleaner assembly; then connect the air flow meter connector and inlet hose.

    Tightening torque:
    Bolt
    31—40 N·m (3.2—4.1 m-kg, 23—30 in-lb)
    Nut
    8—11 N·m (80—110 cm-kg, 69—95 in-lb)

33. Connect the distributor lead.
34. Connect the main fuse block.

    Tightening torque:
    8—11 N·m (80—110 cm-kg, 69—95 in-lb)

35. Install the battery carrier and battery.

    Tightening torque:
    31—40 N·m (3.2—4.1 m-kg, 23—30 in-lb)

36. Pour in ATF and check the following:
    (1) With the engine idling, check that the fluid level is between the F and L marks on the dipstick. (Refer to page 7B—48)
    (2) Check the manual linkage, and adjust if necessary. (Refer to page 7B—50)
    (3) Check the inhibitor switch operation. (Refer to page 7B—42)
    (4) Conduct a road test. (Refer to page 7B—32)
    (5) Check that there is no fluid leakage from the transaxle. (Refer to page 7B—48)

HYDRAULIC CIRCUIT

P RANGE

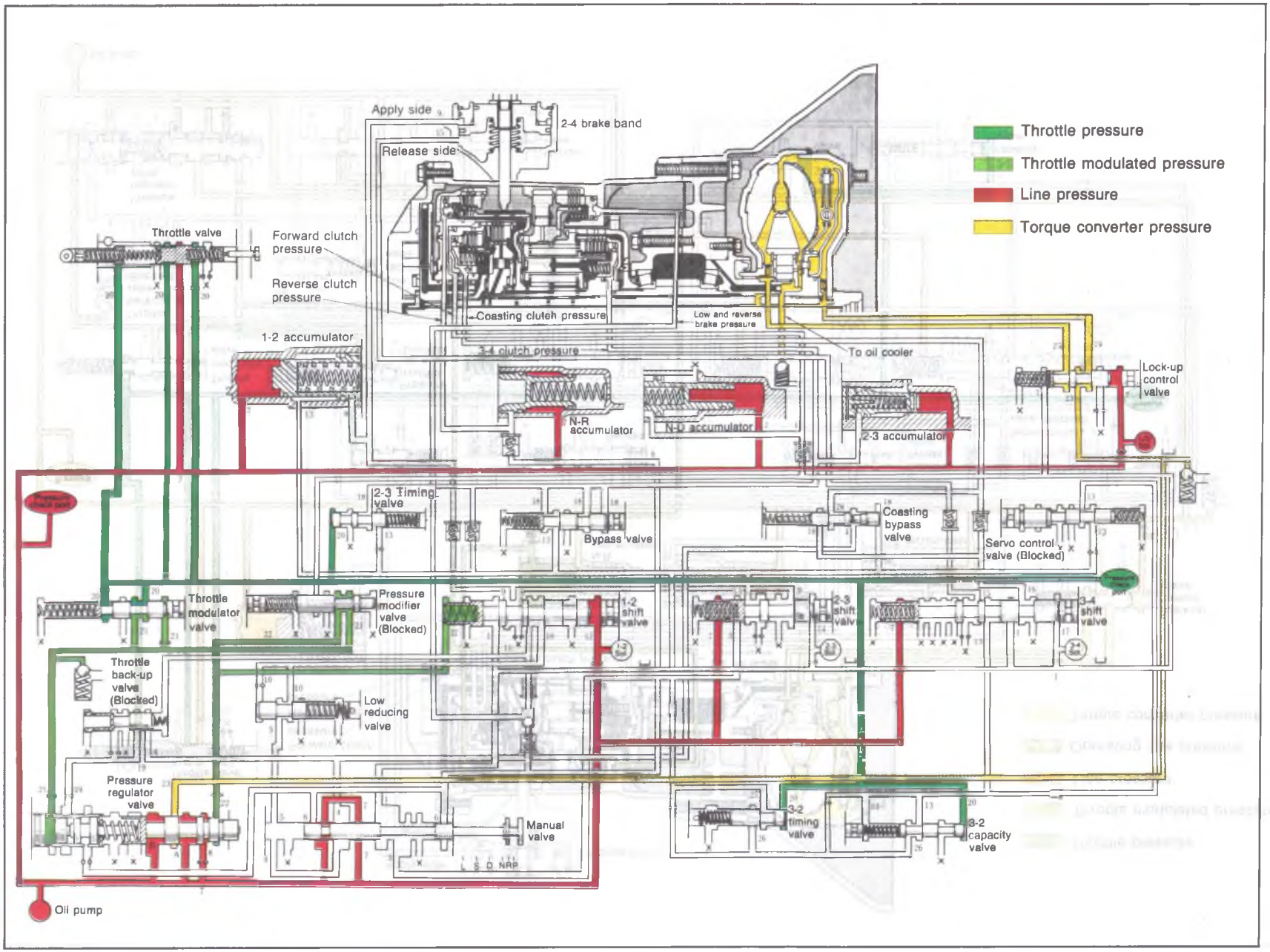

86U07B-461

R RANGE

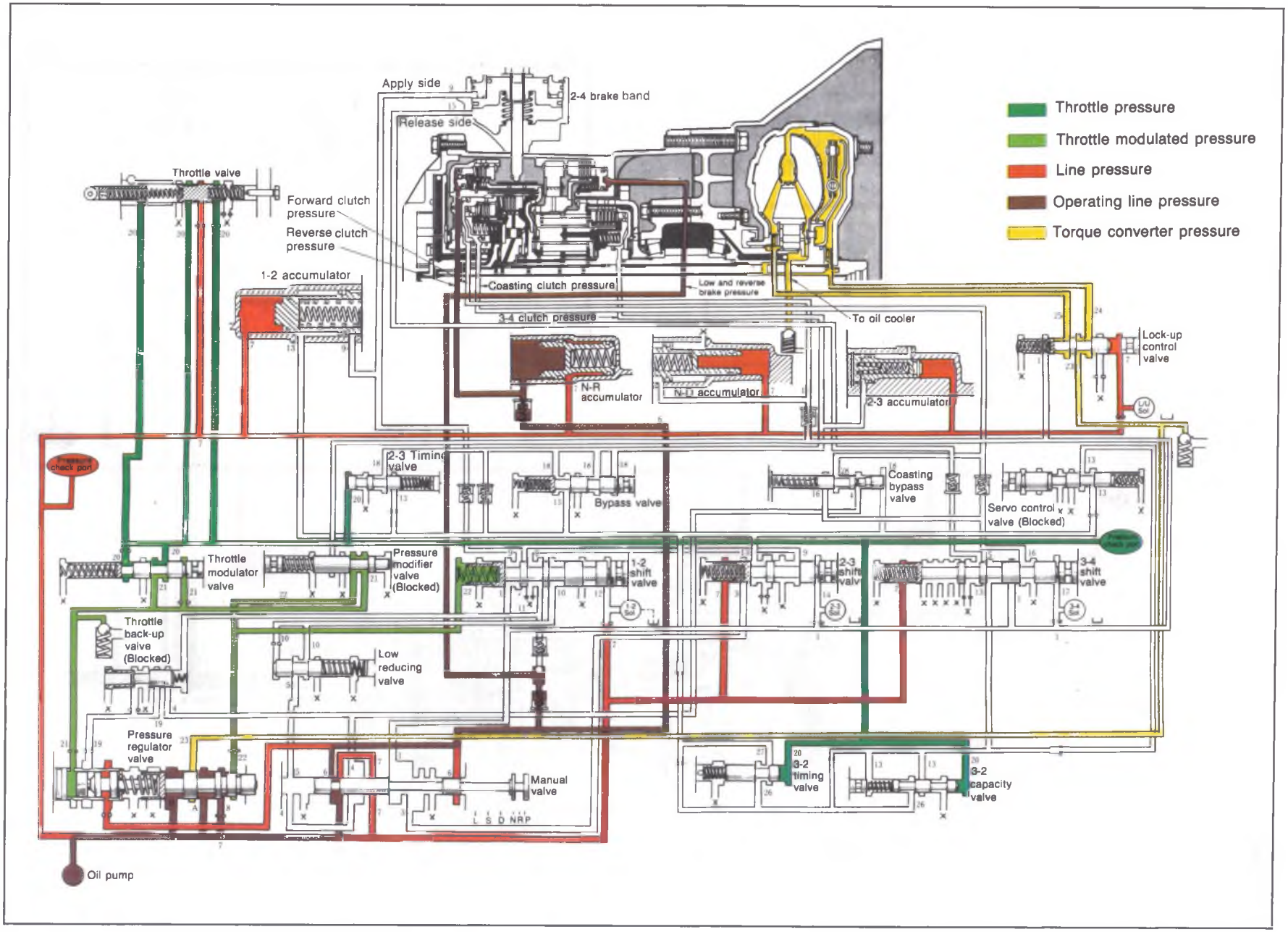

86U07B-462

N RANGE; BELOW APPROX. 18 km/h (11 mph)

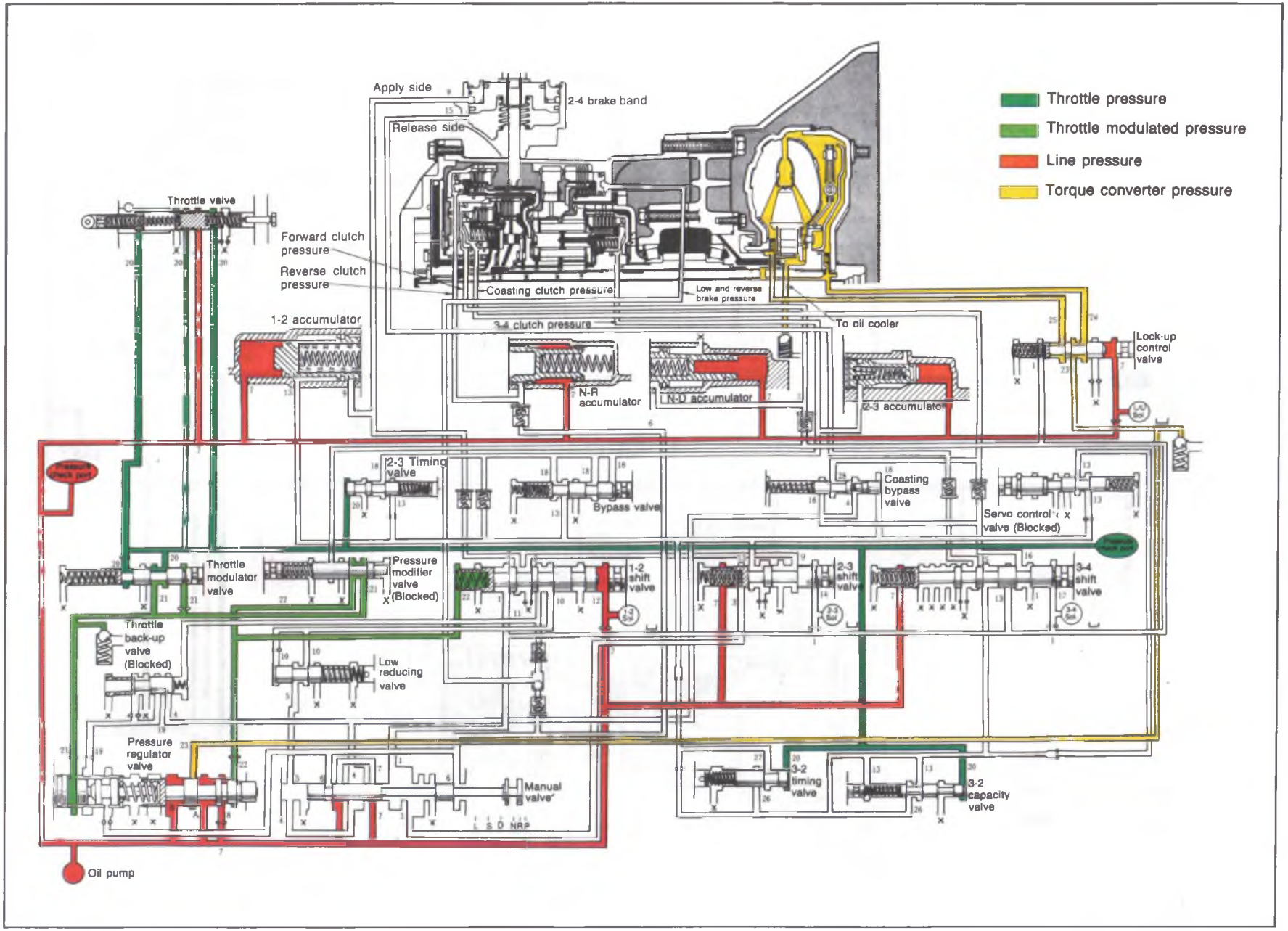

86U07B-463

N RANGE; ABOVE APPROX. 18 km/h (11 mph)

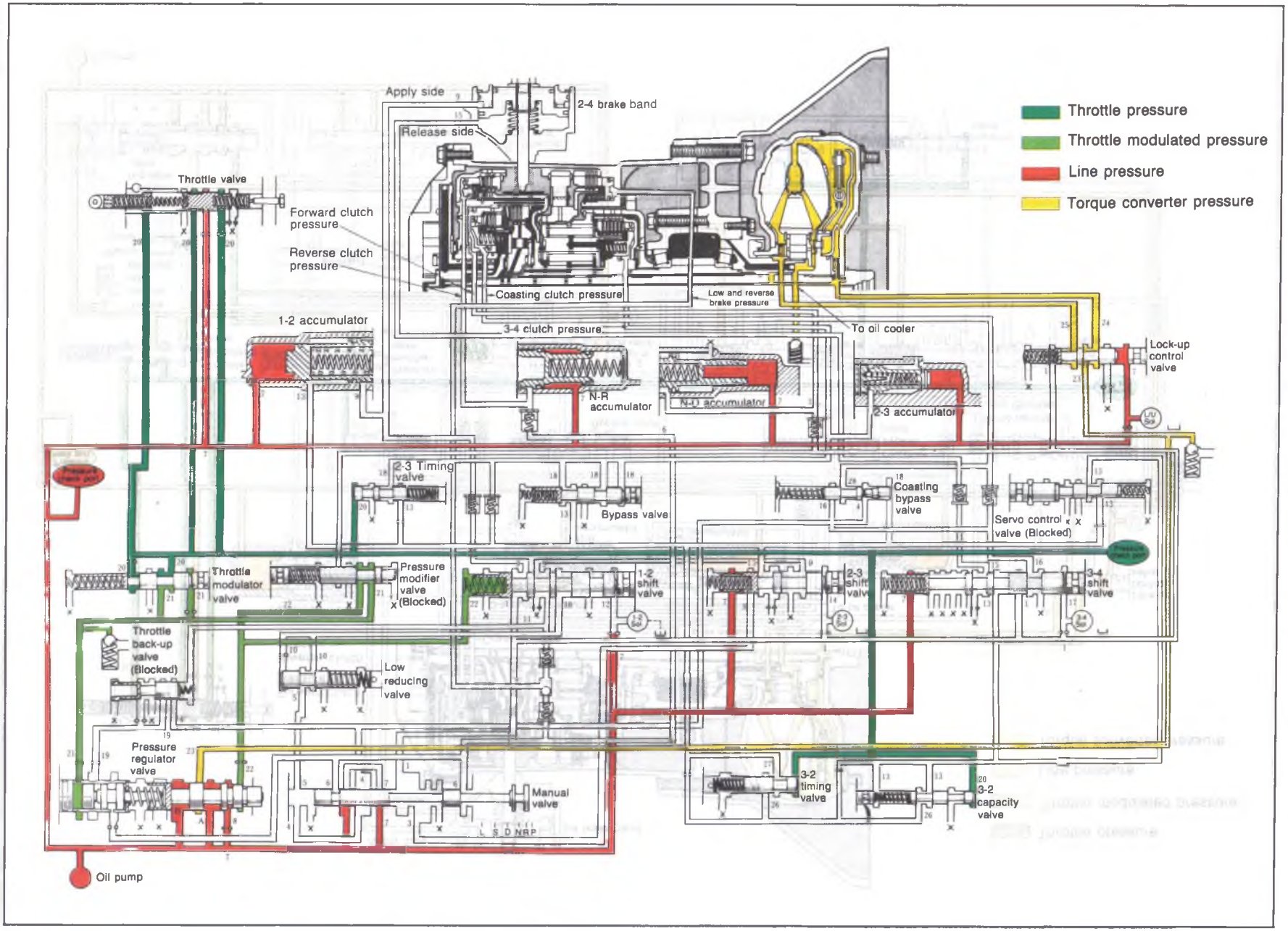

86U07B-464

D RANGE; 1ST GEAR

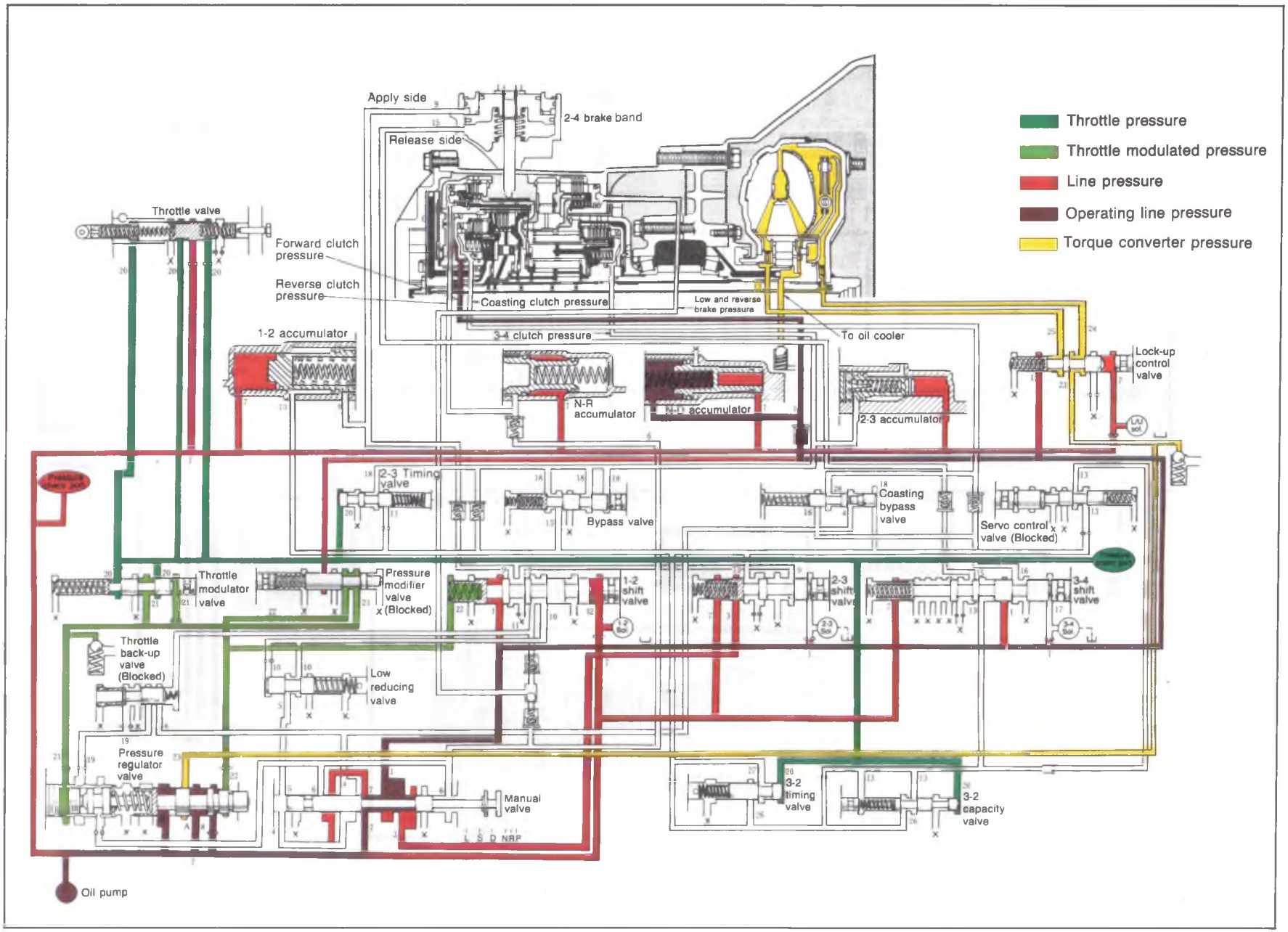

86U07B-465

D RANGE; 2ND GEAR

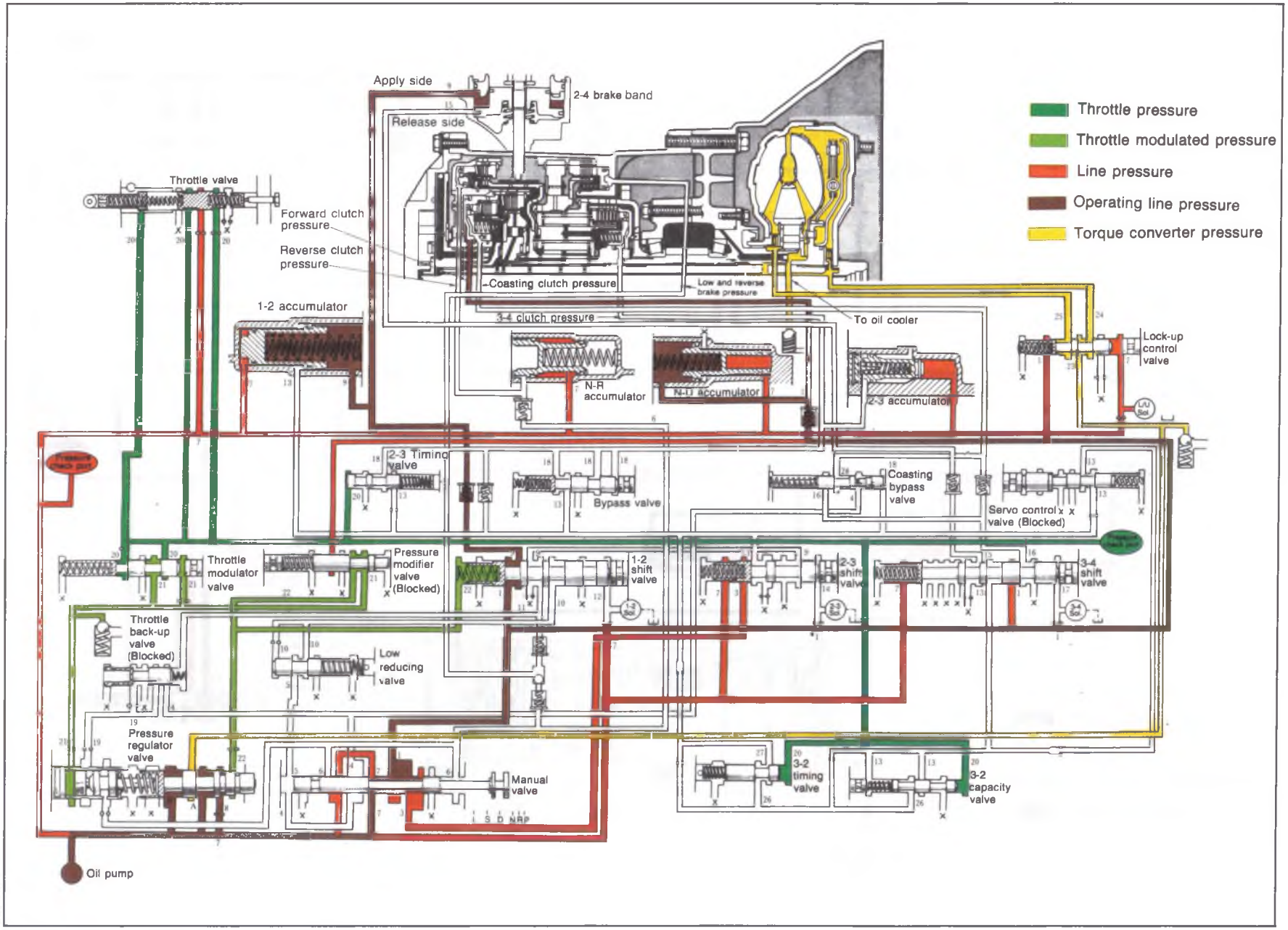

86U07B-466

D RANGE; 3RD GEAR, BELOW APPROX. 40 km/h (25 mph)

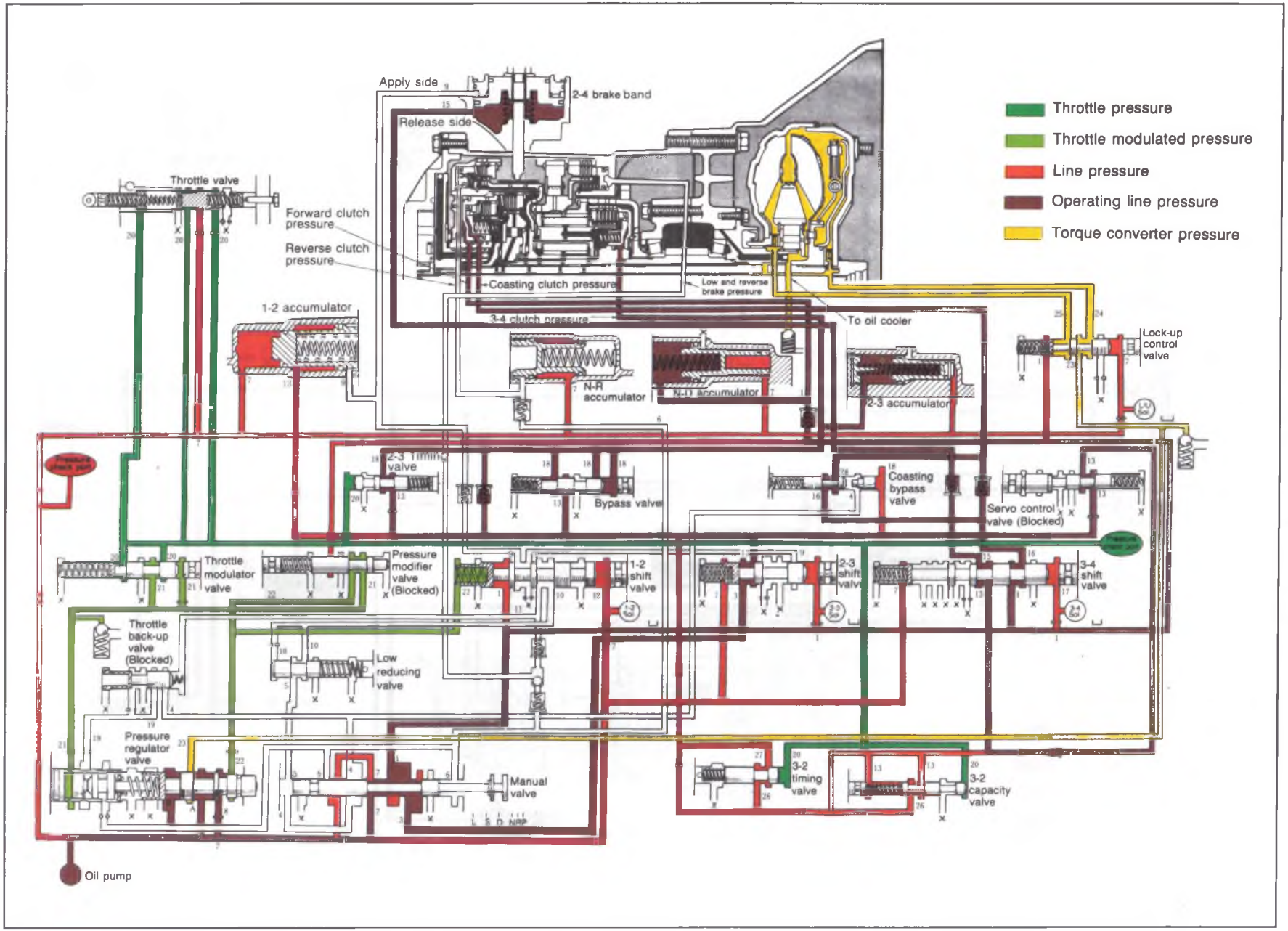

86U07B-467

D RANGE; 3RD GEAR, ABOVE APPROX. 40 km/h (25 mph) LOCK-UP ON

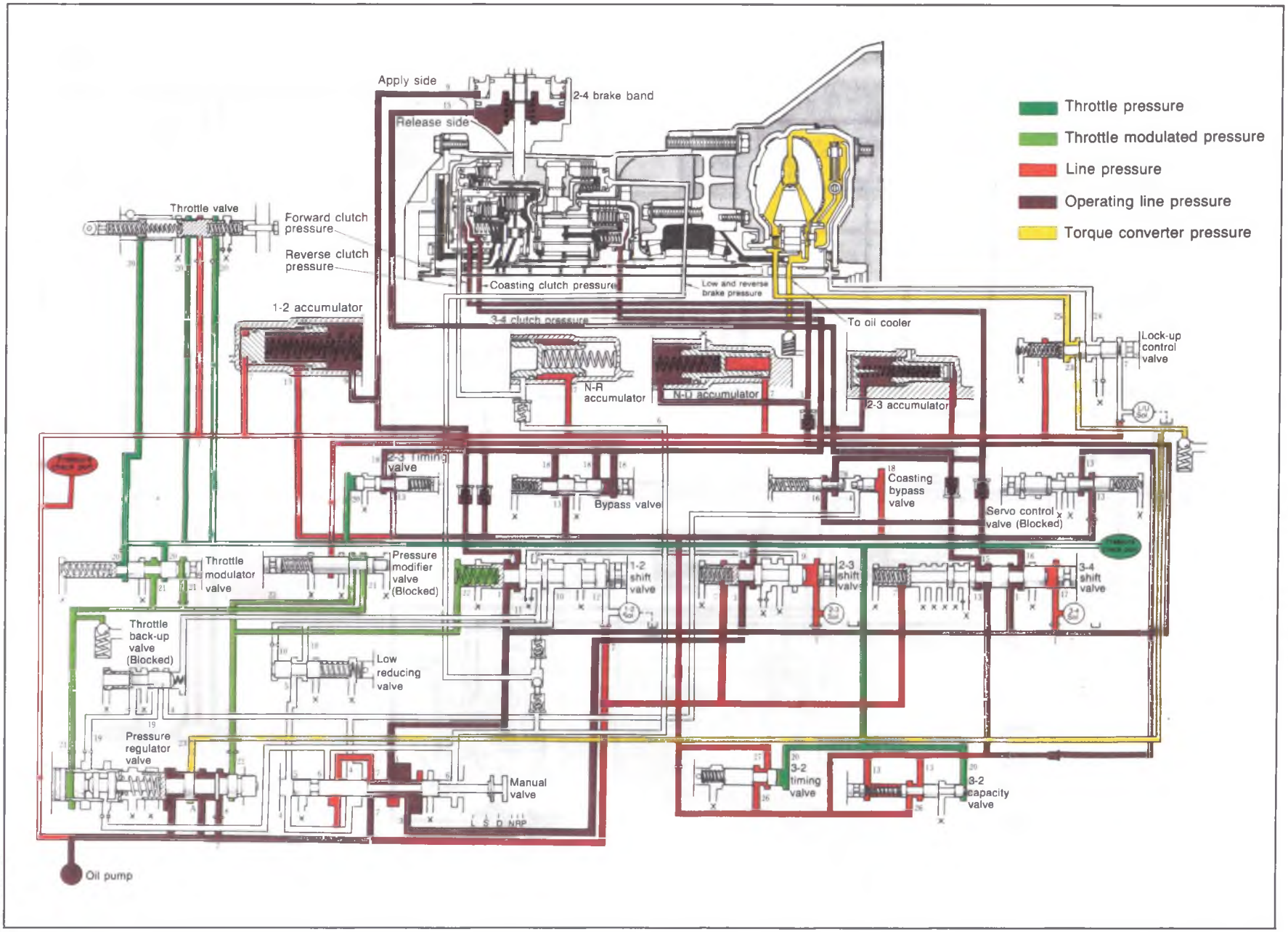

86U07B-468

D RANGE; OD, LOCK-UP ON

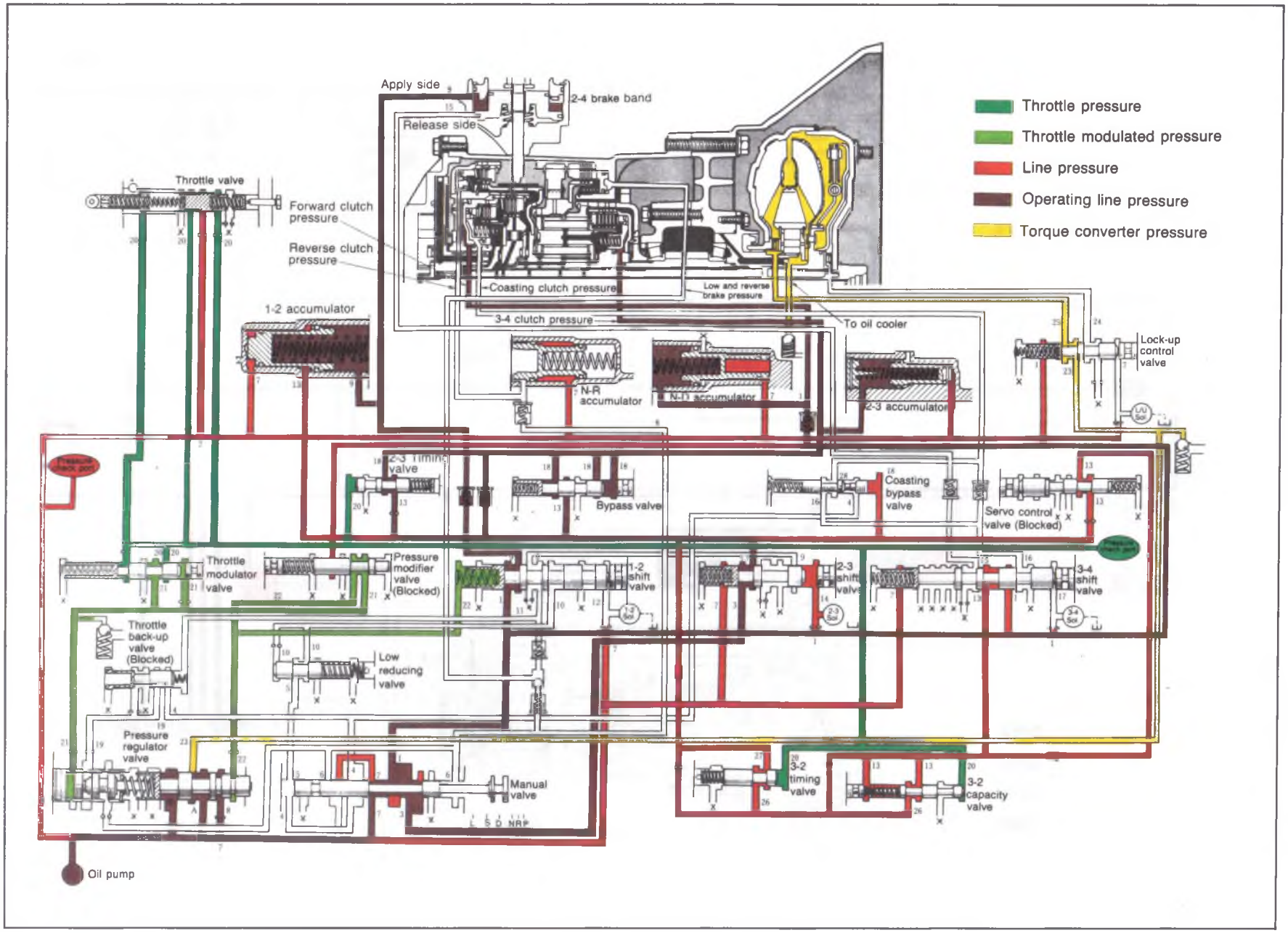

86U07B-469

S RANGE; 1ST GEAR

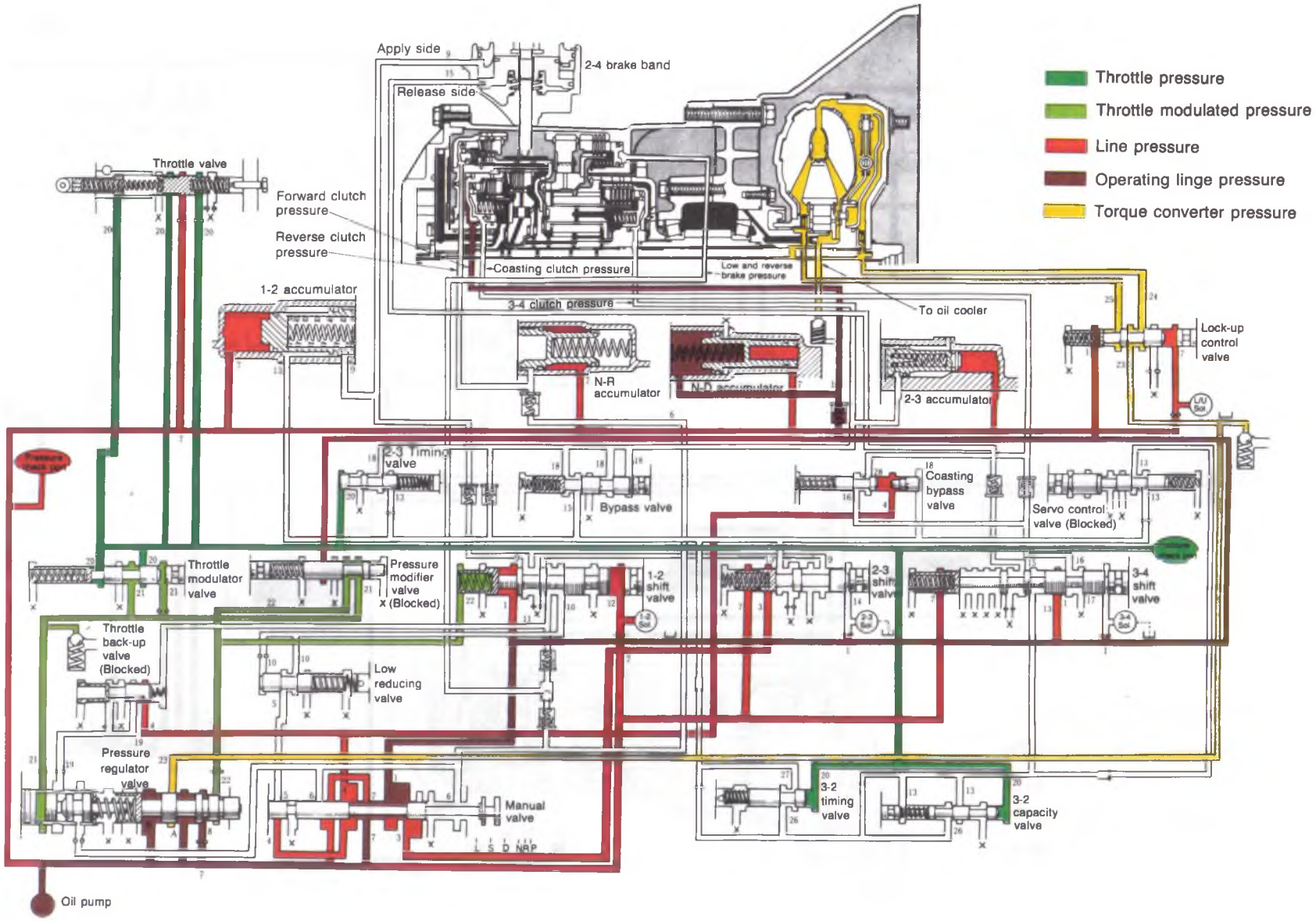

86U07B-470

S RANGE; 2ND GEAR

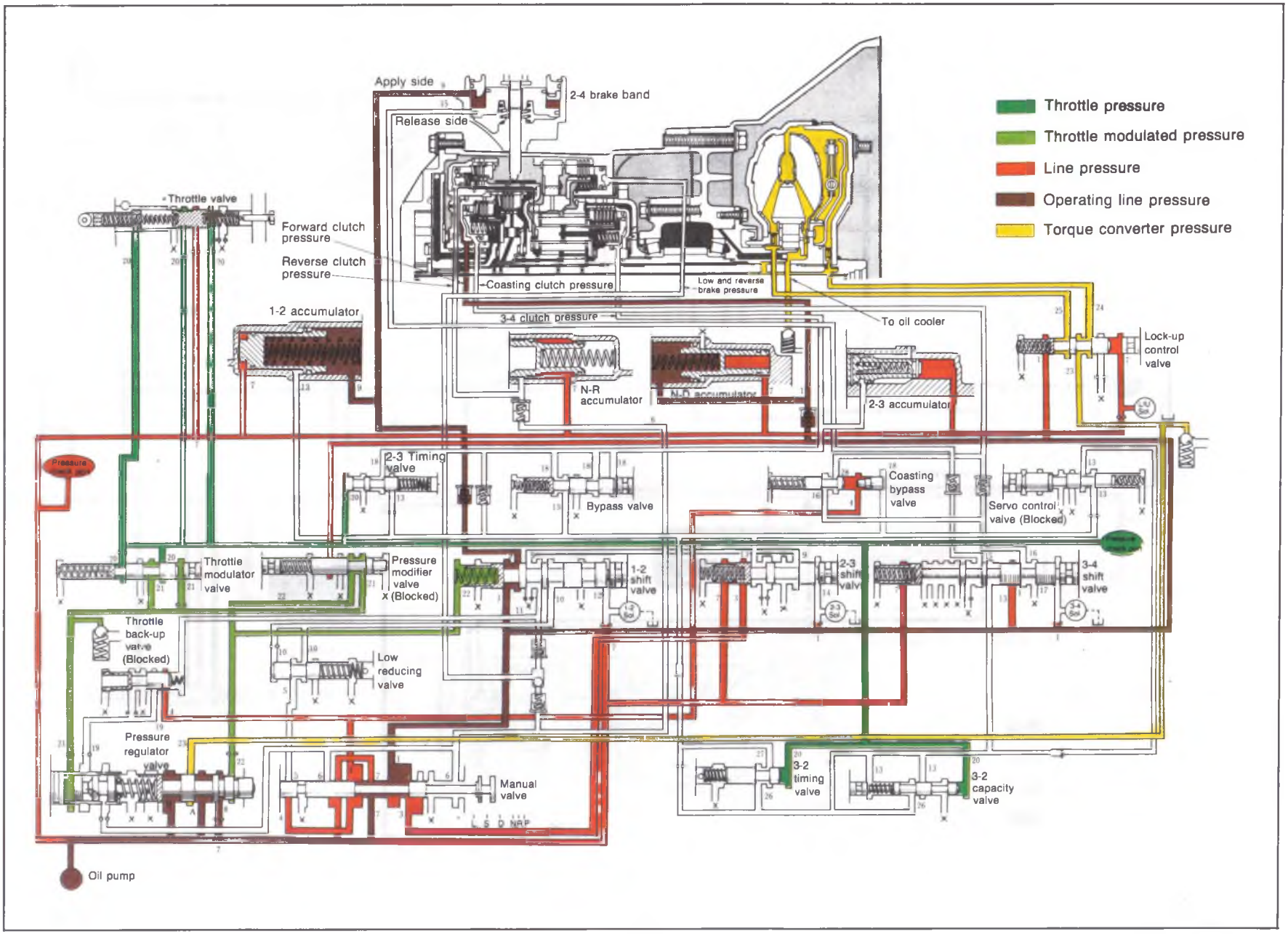

86U07B-471

S RANGE; 2ND GEAR, HOLD

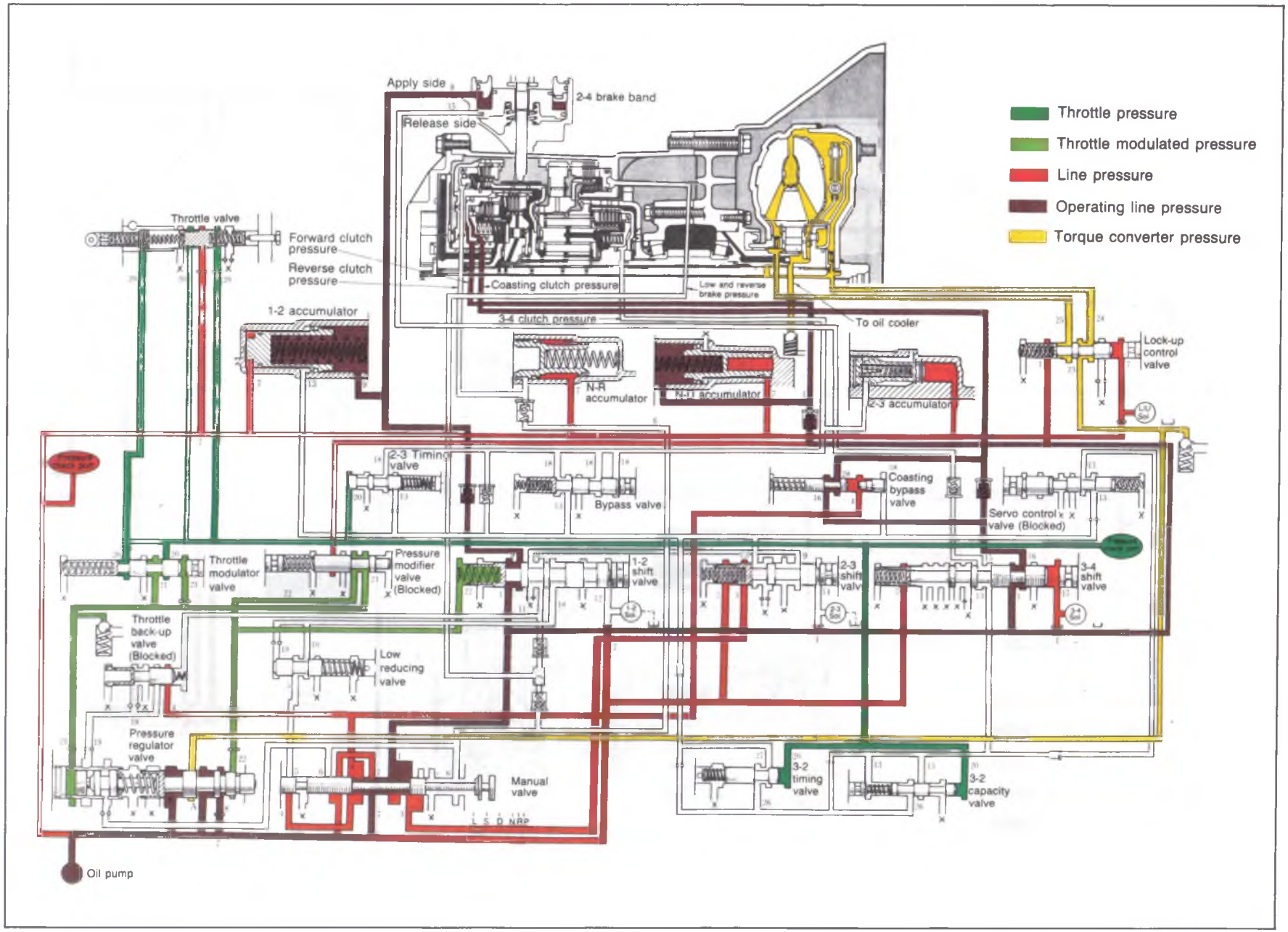

86U07B-472

S RANGE; 3RD GEAR, BELOW APPROX. 40 km/h (25 mph)

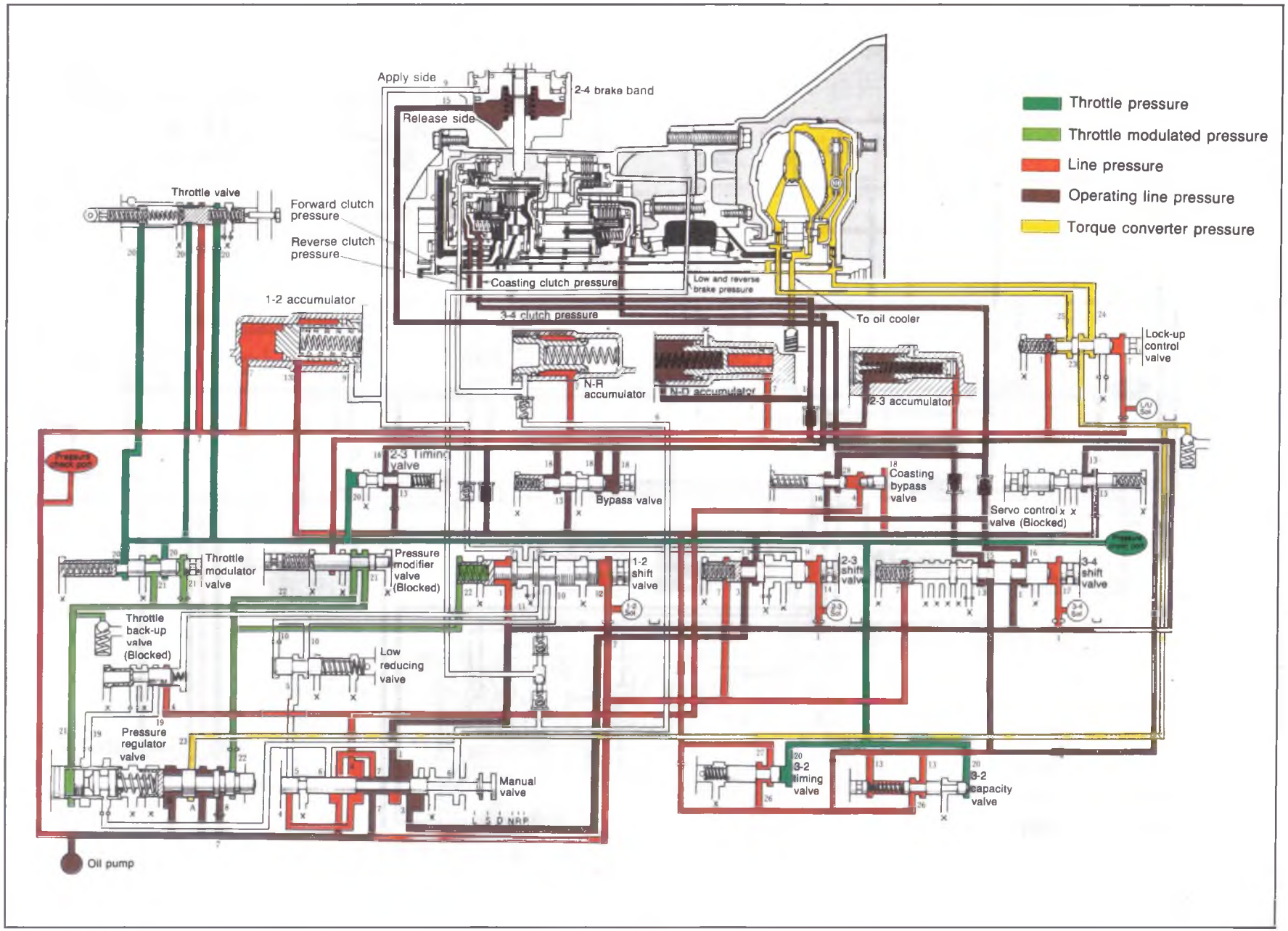

86U07B-473

S RANGE; 3RD GEAR, ABOVE APPROX. 40 km/h (25 mph)

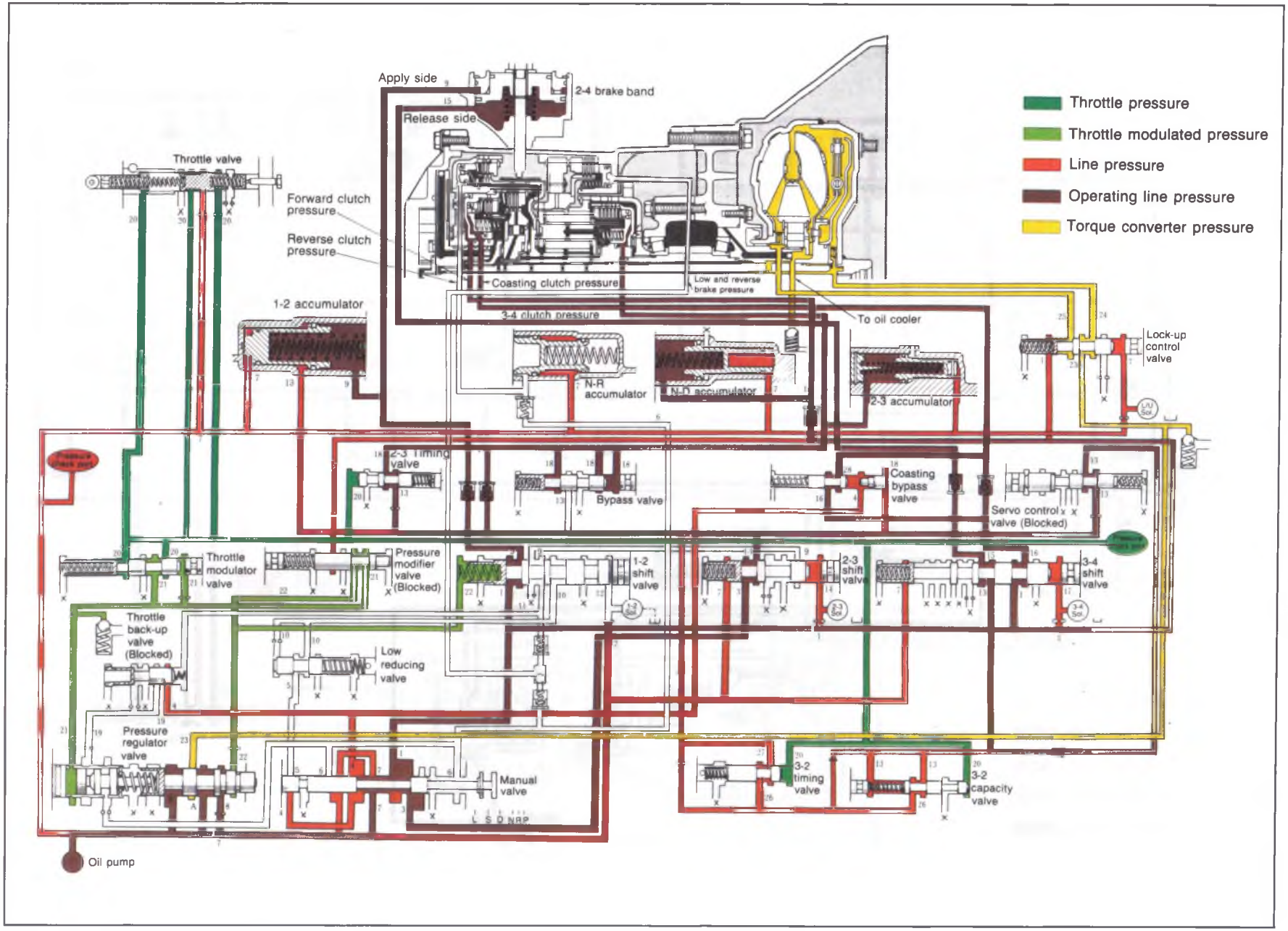

86U07B-474

L RANGE; 1ST GEAR

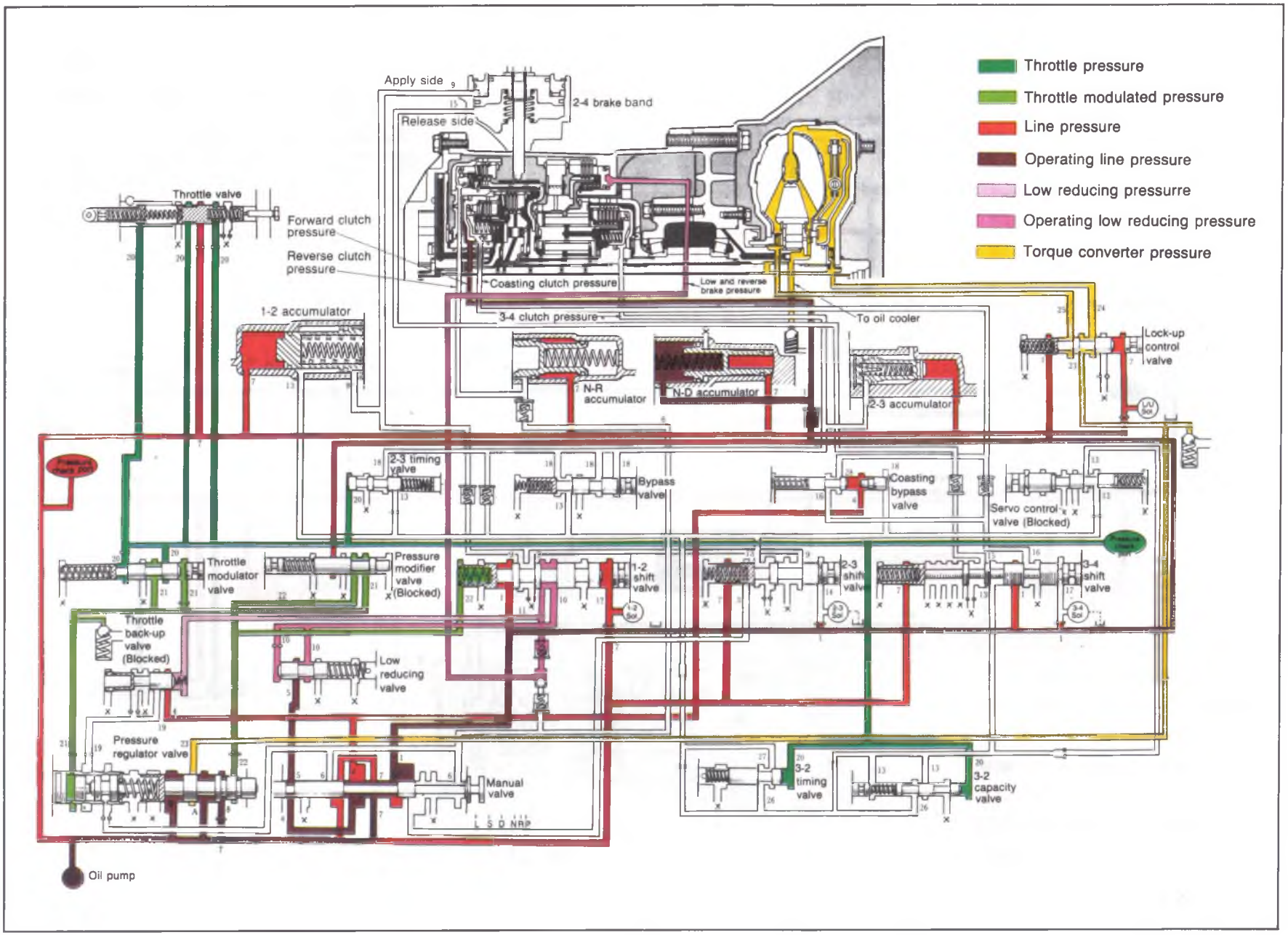

86U07B-475

L RANGE; 1ST GEAR, HOLD

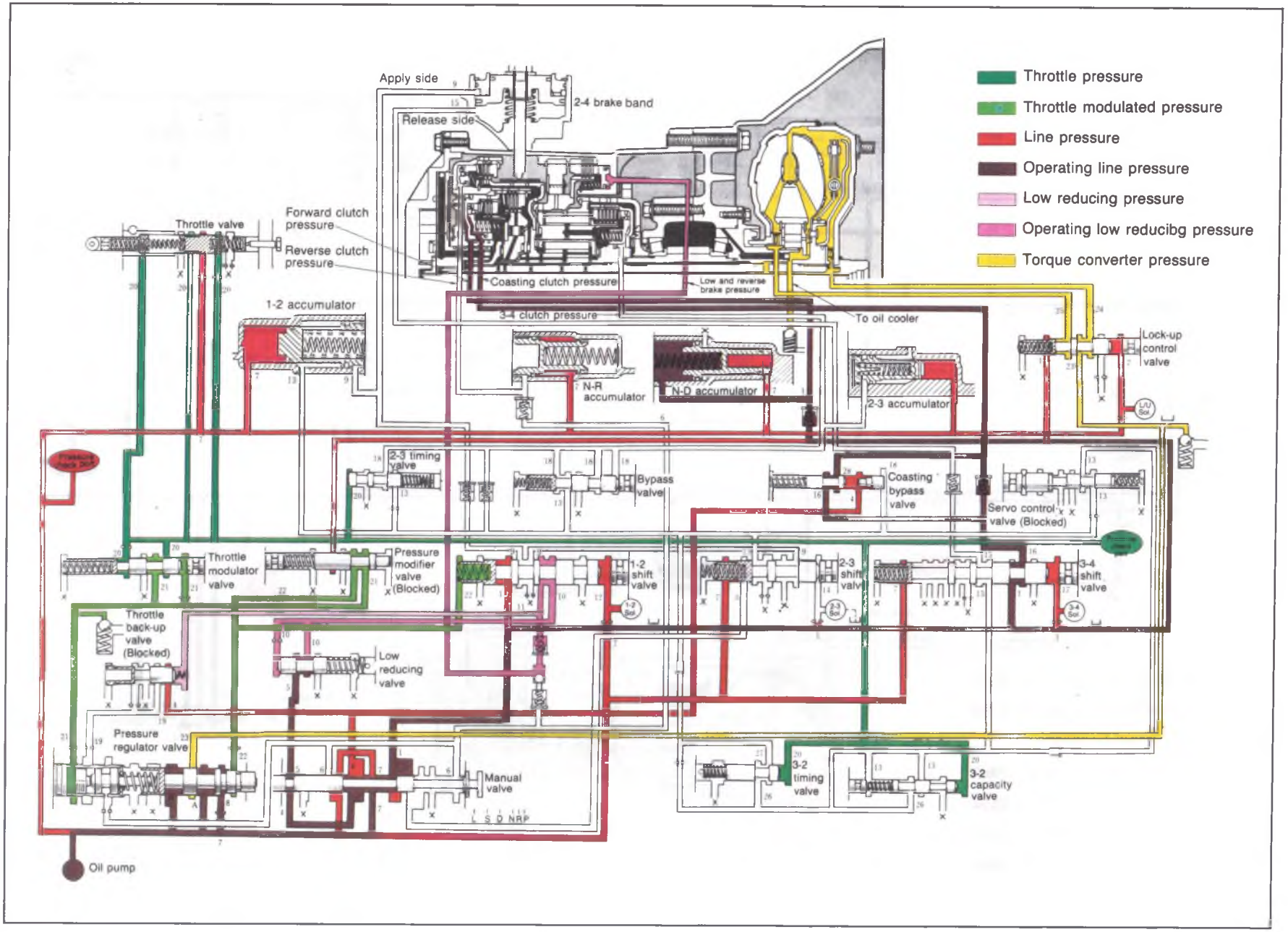

86U07B-476

L RANGE; 2ND GEAR, BELOW APPROX. 110 km/h (68 mph)

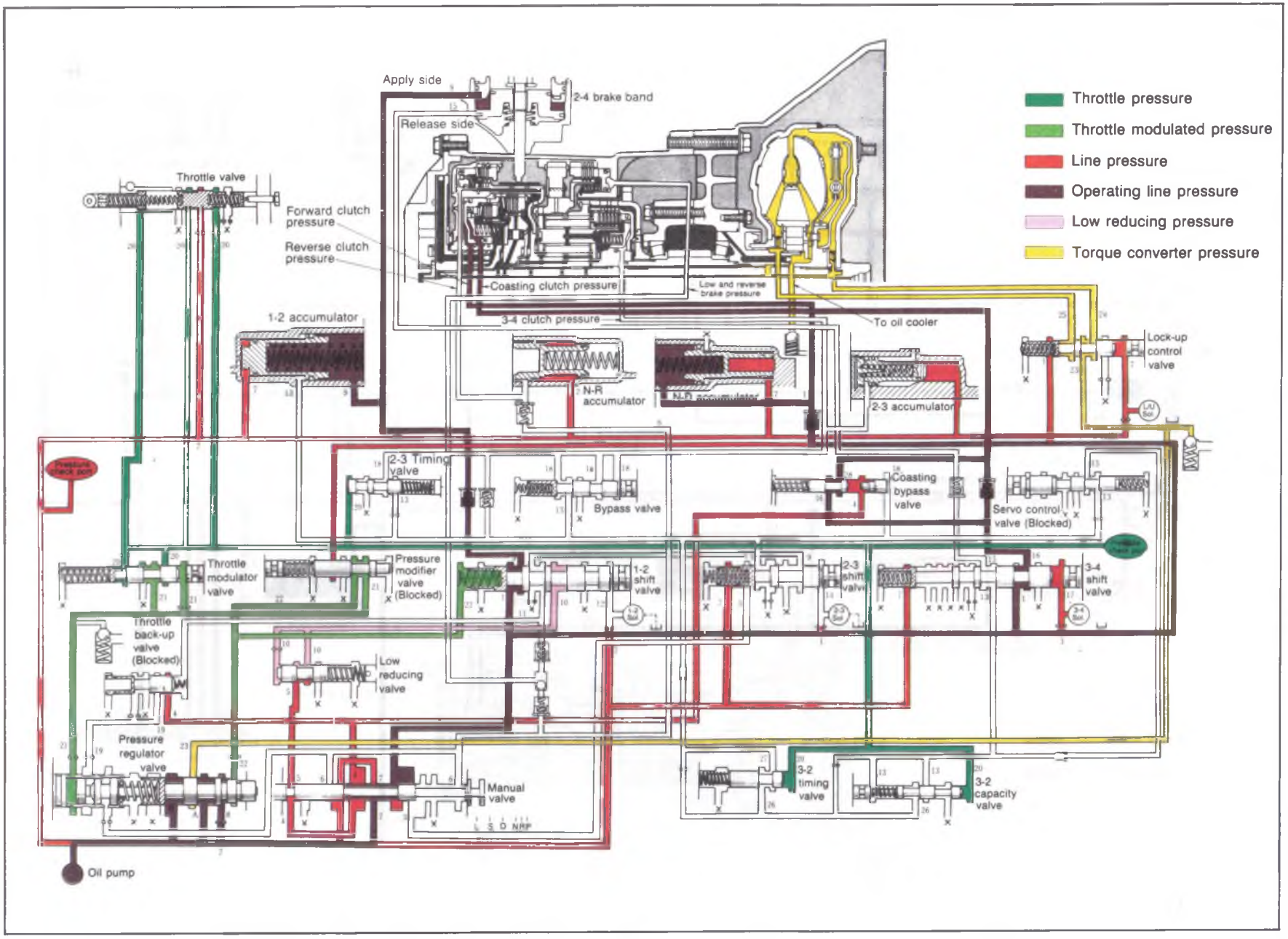

86U07B-477

L RANGE; 2ND GEAR, ABOVE APPROX. 110 km/h (68 mph)

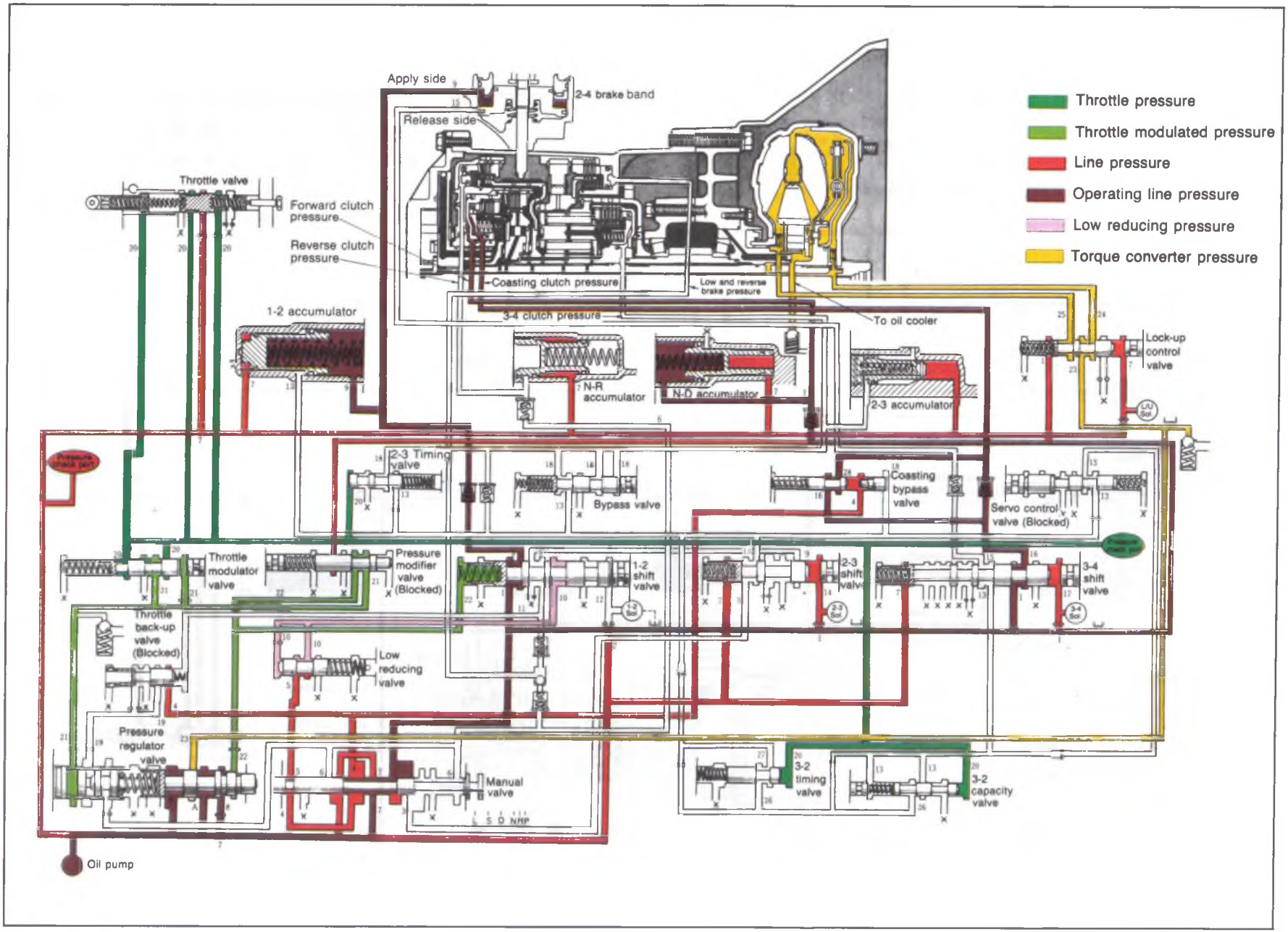

86U07B-47B

FRONT AND REAR AXLES

OUTLINE ..... 9— 2
STRUCTURAL VIEW ..... 9— 2
SPECIFICATIONS ..... 9— 6
TROUBLESHOOTING GUIDE ..... 9— 7
FRONT AXLE ..... 9— 8
ON-VEHICLE MAINTENANCE ..... 9— 8
REMOVAL ..... 9— 9
DISASSEMBLY ..... 9—11
INSPECTION ..... 9—12
ASSEMBLY ..... 9—13
INSTALLATION ..... 9—14
REAR AXLE ..... 9—16
ON-VEHICLE MAINTENANCE ..... 9—16
[Drum Brake] ..... 9—17
REMOVAL ..... 9—17
DISASSEMBLY ..... 9—18
INSPECTION ..... 9—19
ASSEMBLY ..... 9—19
INSTALLATION ..... 9—20
[Disc Brake] ..... 9—21
REMOVAL (2WS) ..... 9—21
REMOVAL (4WS) ..... 9—22
DISASSEMBLY ..... 9—23
INSPECTION ..... 9—24
ASSEMBLY ..... 9—25
INSTALLATION (2WS) ..... 9—26
INSTALLATION (4WS) ..... 9—27
DRIVESHAFT ..... 9—28
ON-VEHICLE MAINTENANCE ..... 9—28
REMOVAL ..... 9—29
DISASSEMBLY (MTX) ..... 9—31
INSPECTION (MTX) ..... 9—32
ASSEMBLY (MTX) ..... 9—33
DISASSEMBLY (ATX) ..... 9—35
INSPECTION (ATX) ..... 9—36
ASSEMBLY (ATX) ..... 9—36
INSTALLATION ..... 9—37
JOINT SHAFT ..... 9—39

86U09X-001

OUTLINE

STRUCTURAL VIEW
Driveshaft (MTX)

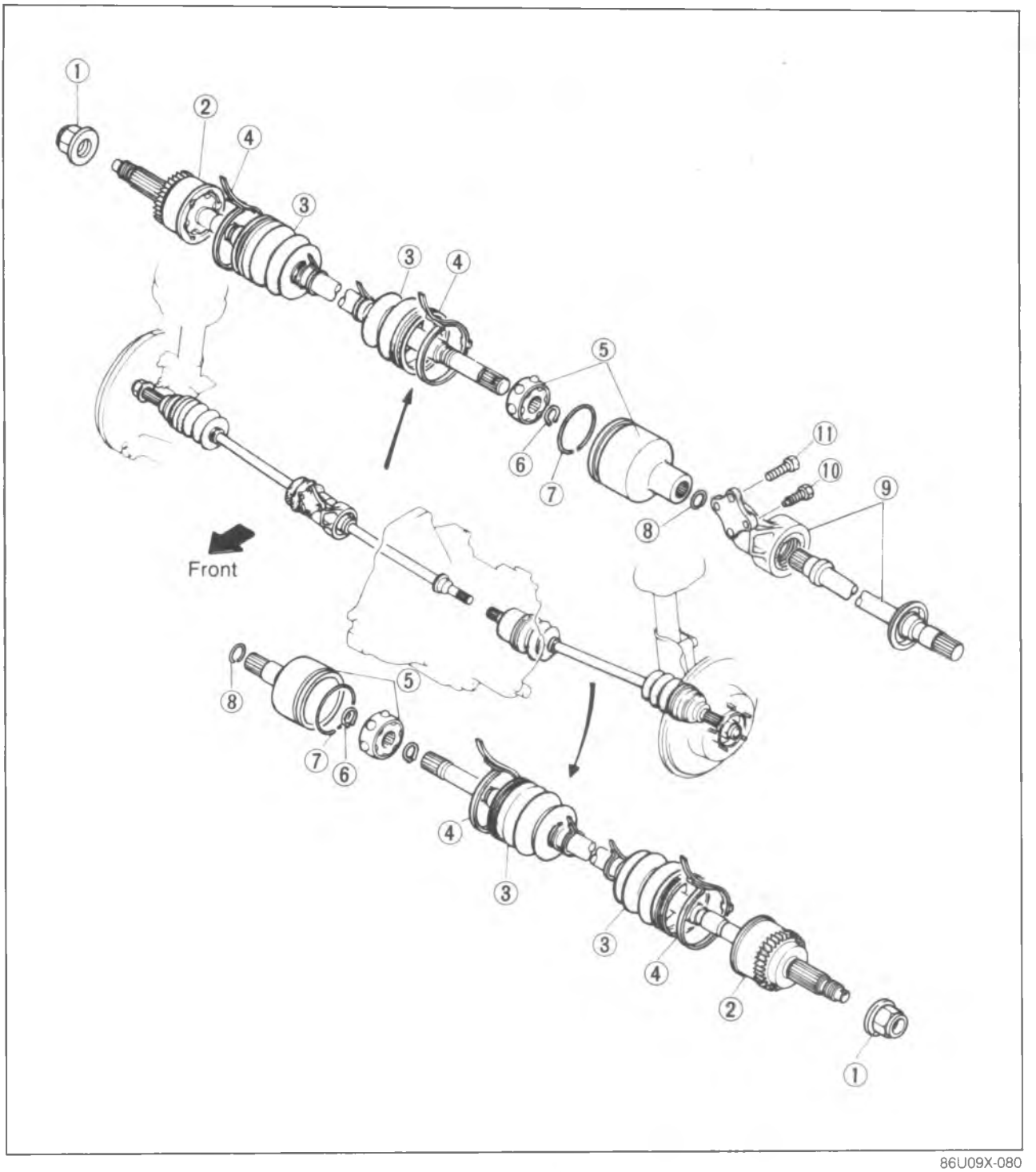

86U09X-080

1. Lock nut
2. Shaft and ball joint assembly
3. Boot
4. Boot band
5. Ball joint assembly (differential side)
6. Snap ring
7. Clip
8. Clip
9. Joint shaft assembly
10. Reamer bolt
11. Bracket mounting bolt

Driveshaft (ATX)

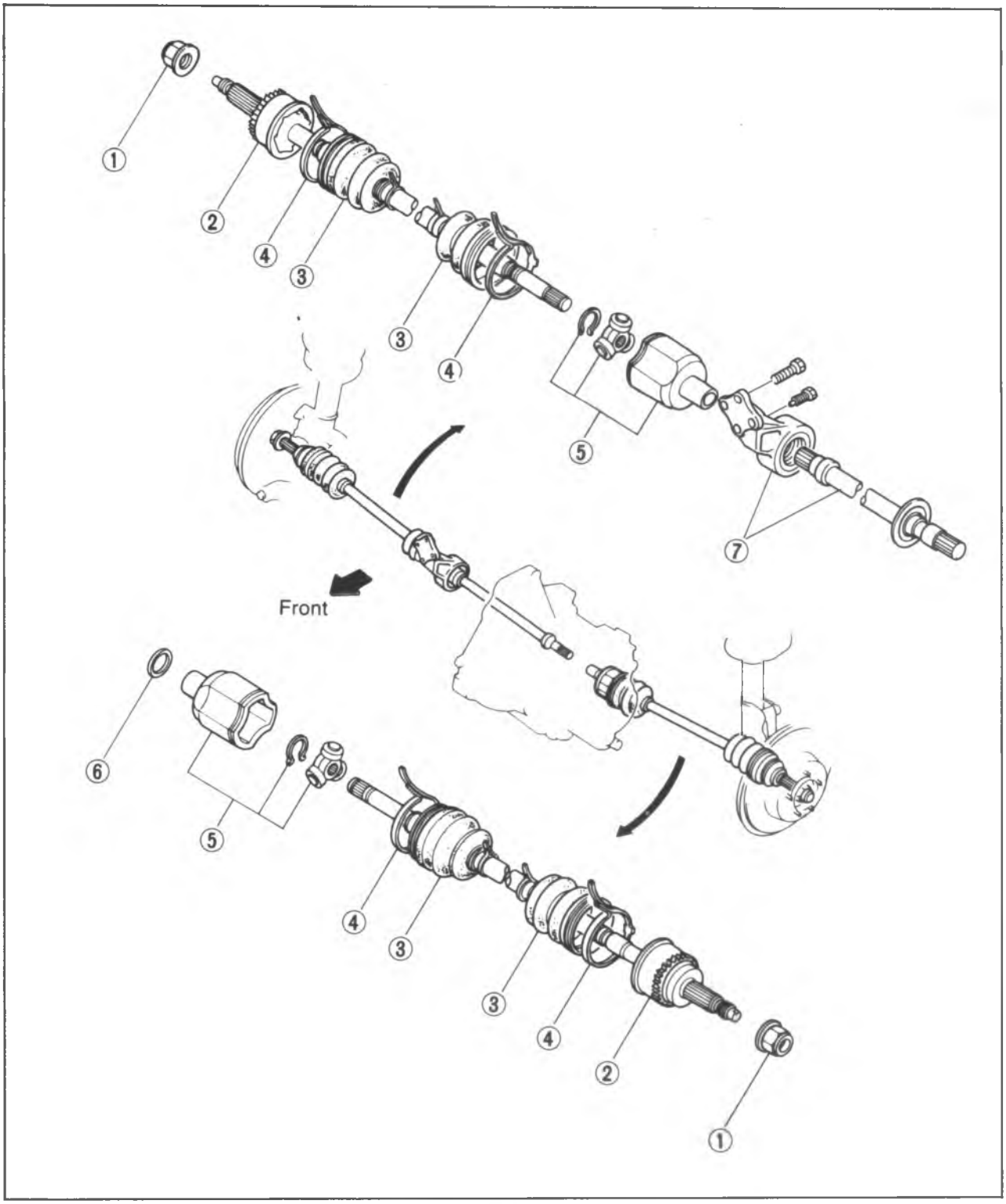

1. Lock nut
2. Shaft and ball joint assembly
3. Boot
4. Boot band
5. Tripod joint assembly
6. Clip
7. Joint shaft assembly

Front Axle

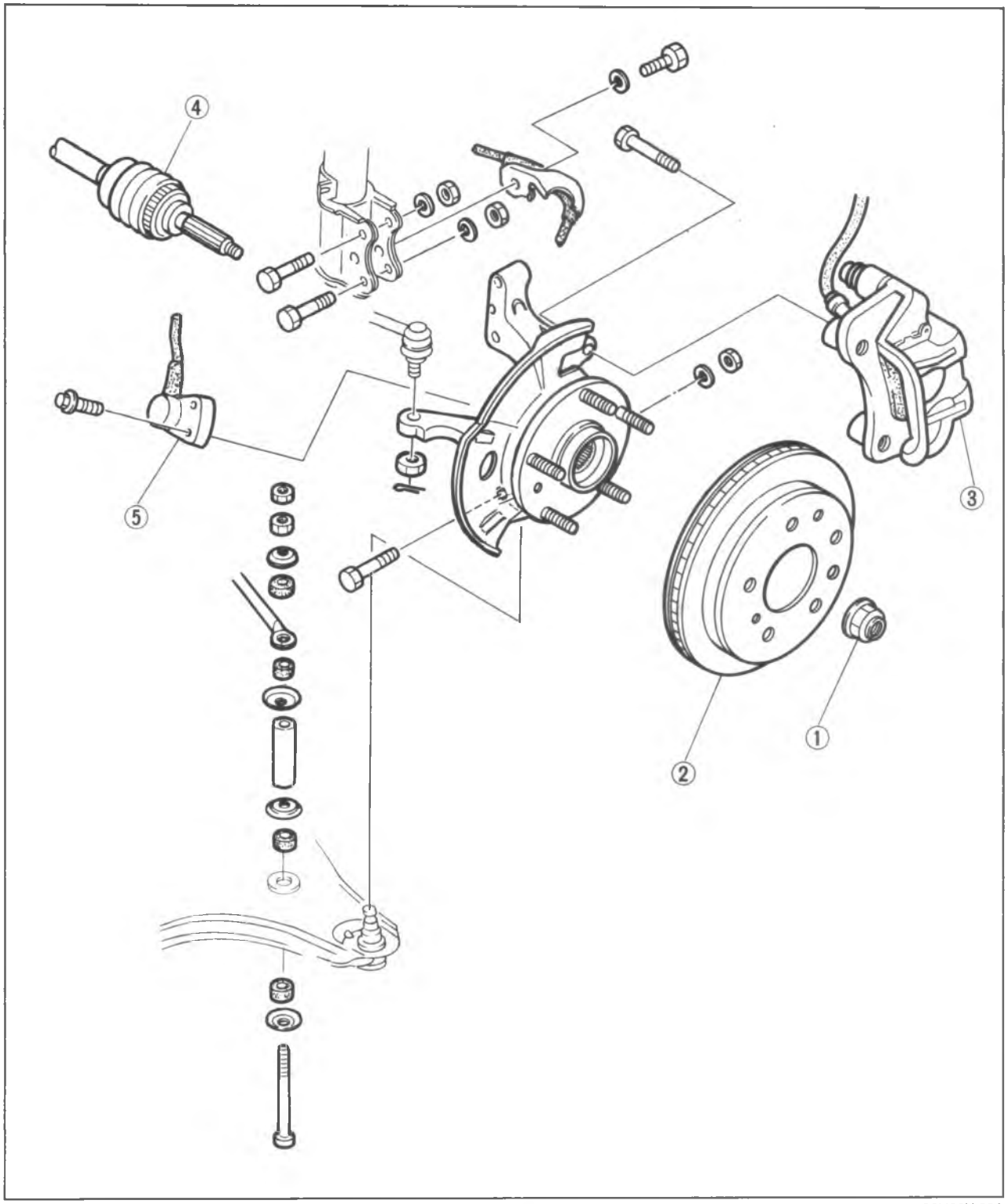

86U09X-002

1. Lock nut
2. Disc plate
3. Caliper assembly
4. Driveshaft
5. Wheel speed sensor (ABS)

Rear Axle

Drum brake

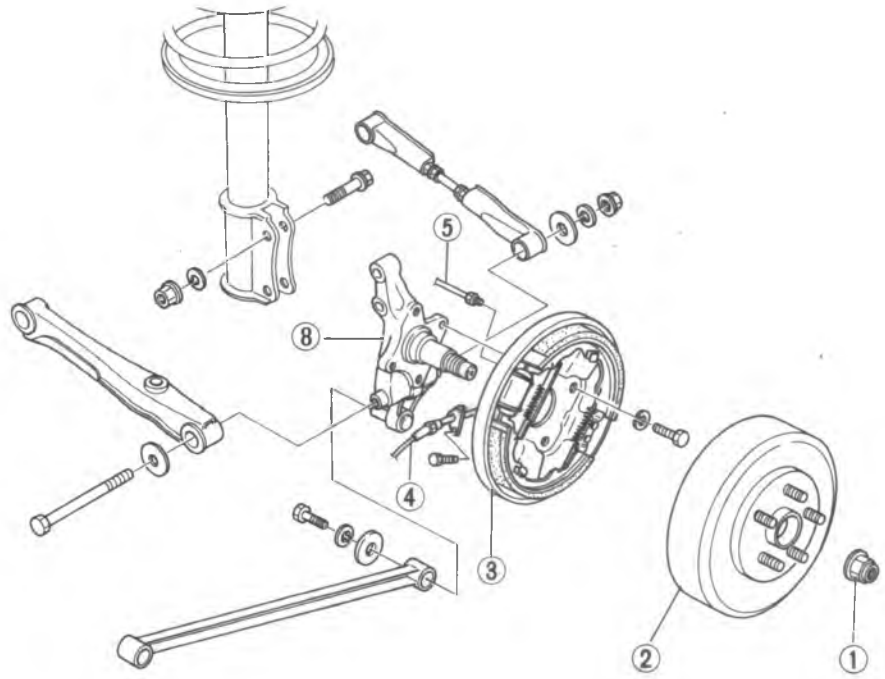

Disc brake

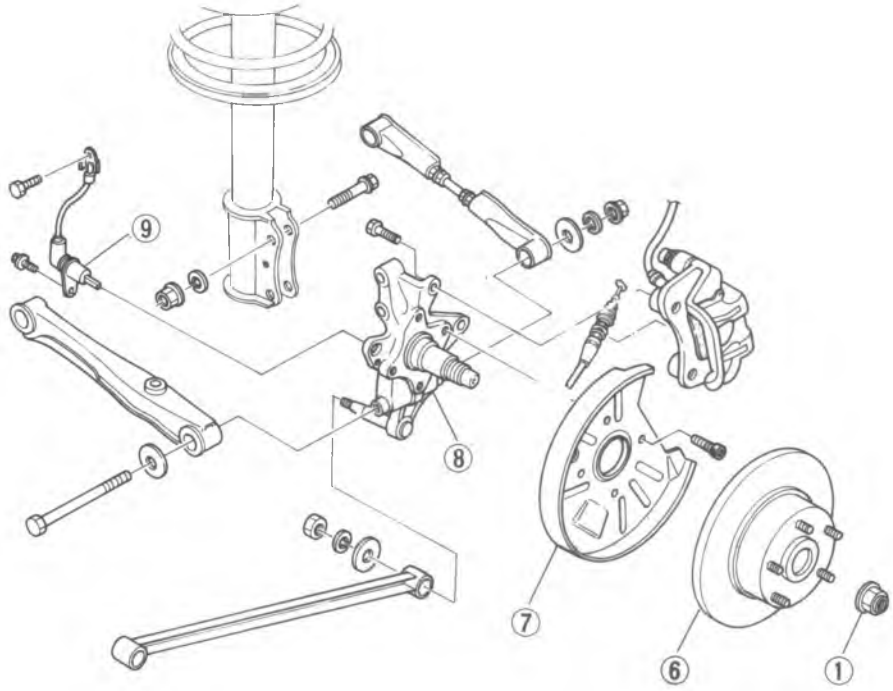

86U09X-003

1. Lock nut
2. Brake drum
3. Back plate
4. Parking cable
5. Brake pipe
6. Disc plate
7. Dust cover
8. Knuckle spindle
9. Wheel speed sensor (ABS)

Rear Axle (4WS)

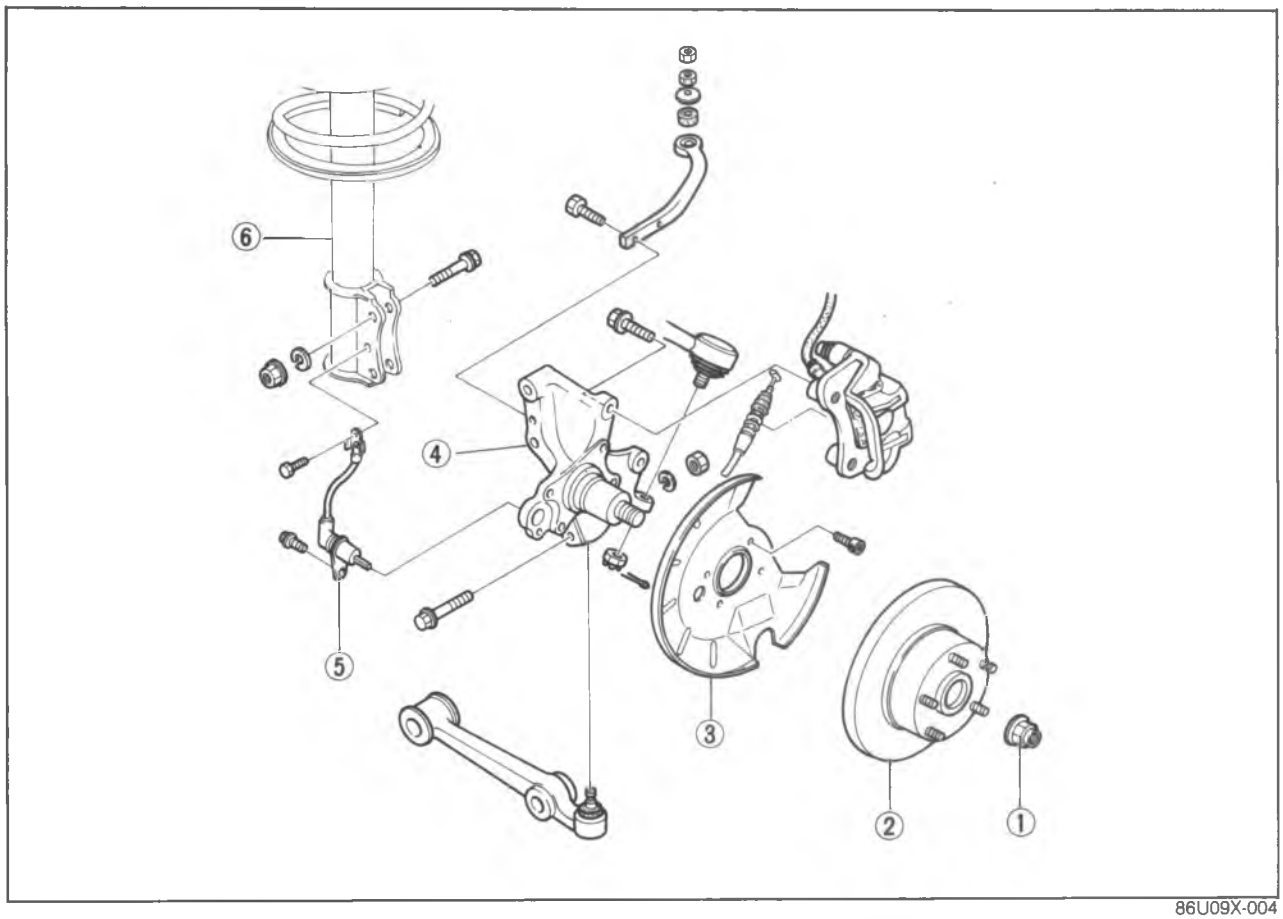

86U09X-004

1. Lock nut
2. Disc plate
3. Dust cover
4. Knuckle spindle
5. Wheel speed sensor (ABS)
6. Shock absorber

SPECIFICATIONS

Item			Turbo		Non-Turbo	
			Right	Left	Right	Left
Length of joint (between centers of joints)	mm (in)	MTX	355.5 (14.00)	355.5 (14.00)	360.0 (14.17)	360.0 (14.17)
		ATX	348.8 (13.73)	348.8 (13.73)	355.5 (14.00)	355.5 (14.00)
Shaft diameter	mm (in)	MTX	26.0 (1.02)		24.0 (0.94)	
		ATX	26.0 (1.02)		24.0 (0.94)	

86U09X-005

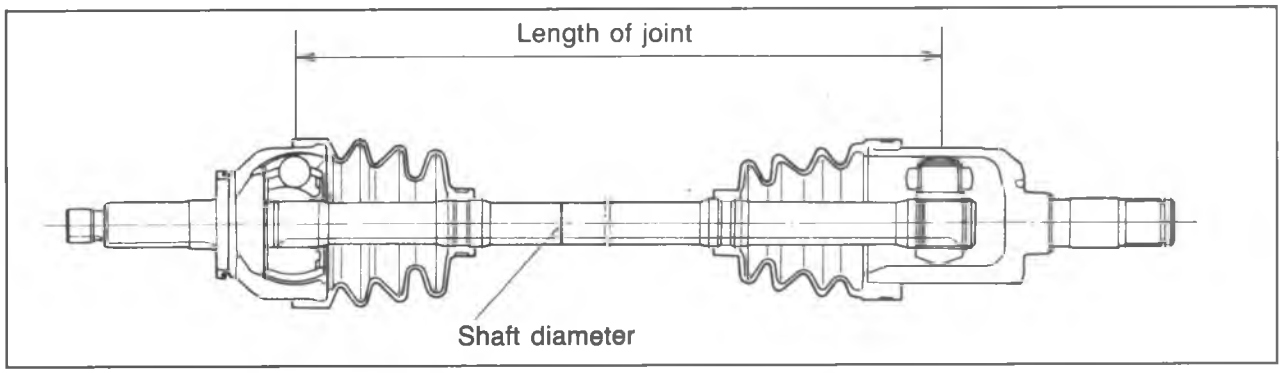

86U09X-082

TROUBLESHOOTING GUIDE

Problem	Possible Cause	Remedy	Page
Faulty operation of driveshaft	Broken ball joint Broken tri-pod joint Worn or seized joint	Replace Replace Replace	9—31 9—35 9—31, 35
Abnormal noise from driveshaft	Insufficient grease in joint or spline Excessive backlash on spline Worn joint	Add or replace Replace Replace	9—33, 36 9—31, 35 9—31, 35
Steering wheel pulls. (Steering wheel pulls toward either right or left side)	Bent steering linkage Fatigued coil spring Lower arm bushing worn or damaged Bent knuckle Bent lower arm or loose mounting Incorrect toe-in adjustment Improper tire air pressure Unevenly worn tires (left and right tires) Brake dragging	Refer to Section 10 Refer to Section 13 Refer to Section 13 Replace Refer to Section 13 Refer to Section 13 Refer to Section 12 Refer to Section 12 Refer to Section 11	— — — 9—11 — — — — —
Unstable handling	Bent steering linkage Joint in steering system worn or damaged Incorrect steering pinion preload adjustment Fatigued coil spring Faulty shock absorber(s) Lower arm bushing worn or damaged Incorrect toe-in adjustment (front or rear) Improper tire air pressure Wheel(s) bent or unbalanced	Refer to Section 10 Refer to Section 10 Refer to Section 10 Refer to Section 13 Refer to Section 13 Refer to Section 13 Refer to Section 13 Refer to Section 12 Refer to Section 12	— — — — — — — — —
Excessive steering wheel play	Faulty front wheel bearing Incorrect steering pinion preload adjustment Rack and pinion worn Joint in steering system worn or damaged Lower arm bushing worn or damaged	Adjust Refer to Section 10 Refer to Section 10 Refer to Section 10 Refer to Section 13	9—11 — — — —
Tires excessively worn or worn unevenly	Incorrect toe-in adjustment Improper tire air pressure Unbalanced wheel(s)	Refer to Section 13 Refer to Section 12 Refer to Section 12	— — —
Abnormal noise from axle	Faulty wheel bearing	Replace	9—11,18,23

86U09X-006

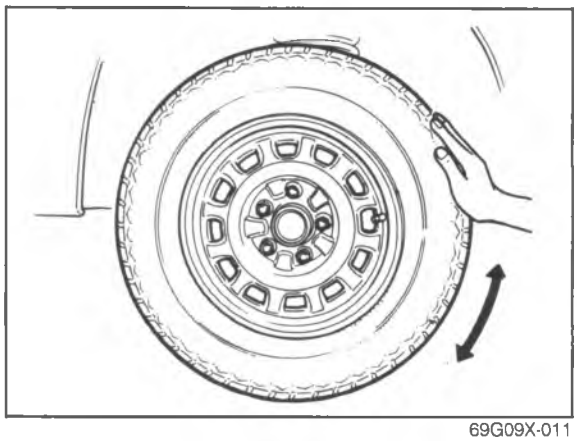

69G09X-011

FRONT AXLE

ON-VEHICLE MAINTENANCE

Wheel Bearing Play

1. Jack up the vehicle and support it with safety stands.
2. Check that there is no abnormal noise and that the tire rotates smoothly when rotated by hand.

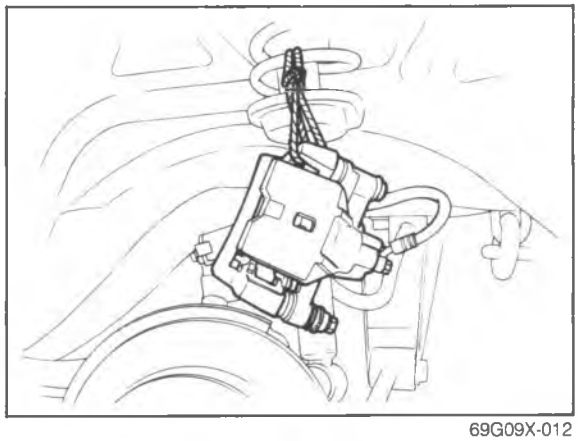

69G09X-012

3. Remove the wheel.
4. Remove the caliper assembly and suspend it using a rope.

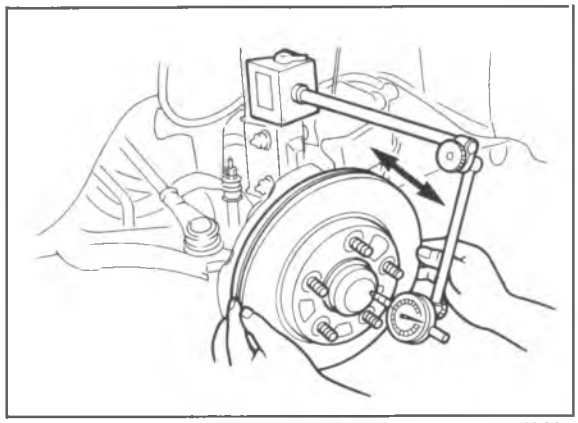

86U09X-007

5. Position a dial indicator against the hub cap, then push and pull the disc plate by hand in the axial direction and measure the end play of the wheel bearing.
   If the end play exceeds specification, replace the wheel bearing.

   End play: 0.2 mm (0.0079 in) max

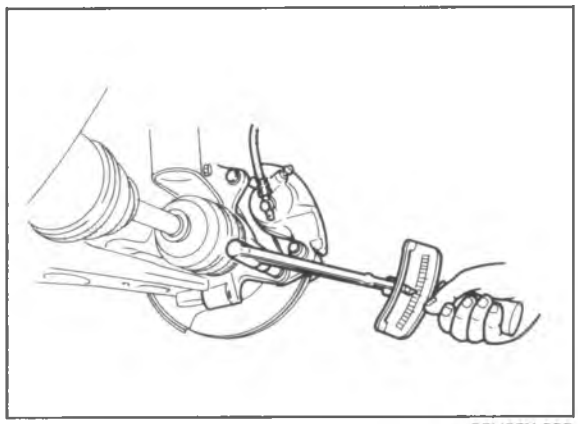

86U09X-008

6. Install the caliper assembly.

   Tightening torque: 78—98 N·m (8.0—10.0 m-kg, 58—72 ft-lb)

7. Install the wheel.

   Tightening torque: 88—118 N·m (9.0—12.0 m-kg, 65—87 ft-lb)

REMOVAL

Removal in the sequence shown in the figure referring to the removal note for the specially marked parts.

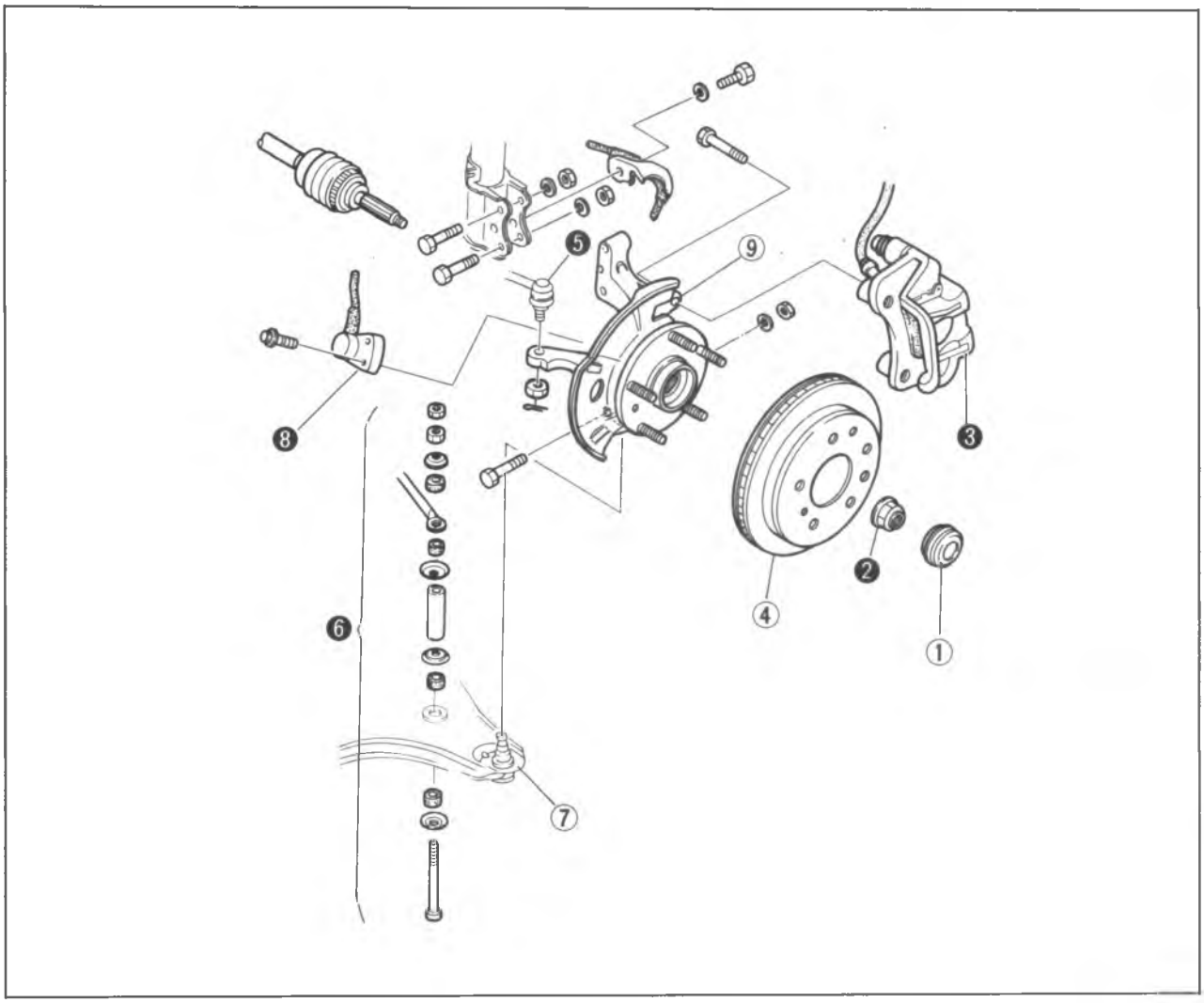

86U09X-009

1. Hub cap
2. Lock nut
3. Caliper assembly
4. Disc plate
5. Tie-rod end
6. Stabilizer
7. Lower arm
8. Wheel speed sensor (ABS)
9. Knuckle

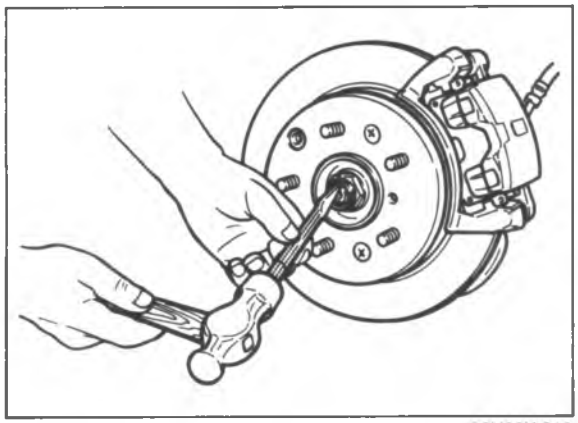

86U09X-010

Removal Note
Lock nut

1. Uncrimp the tab of the lock nut.

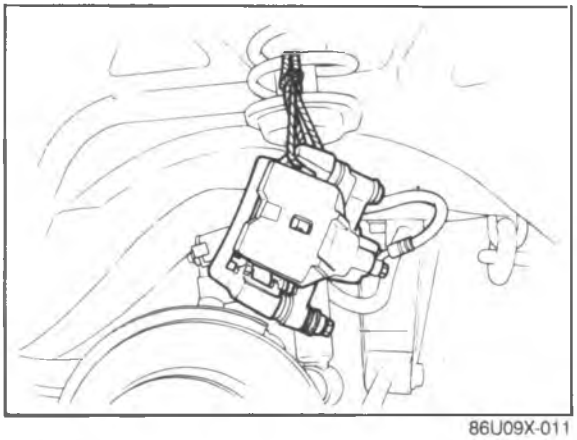

86U09X-011

Caliper assembly
Remove the caliper assembly and suspend it.

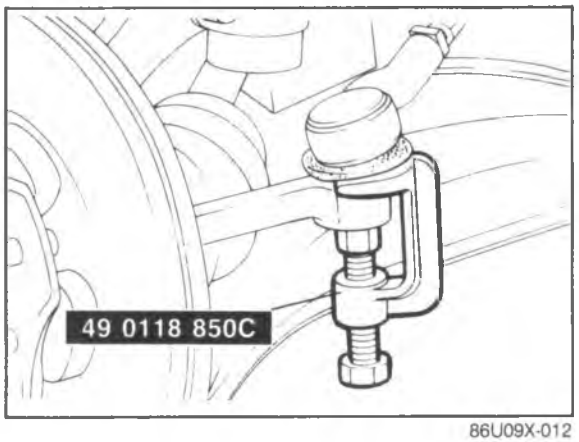

86U09X-012

Tie-rod end
Disconnect the tie-rod end with the **SST**.

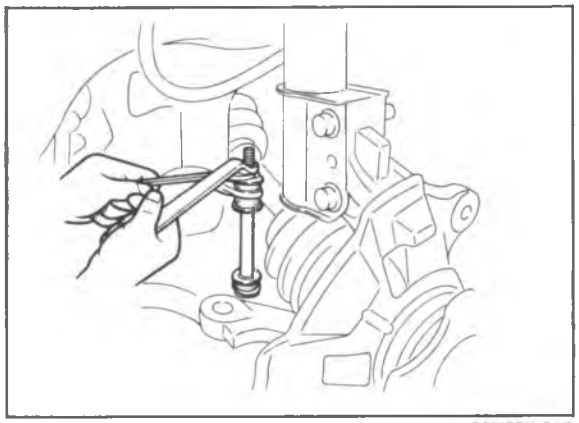

86U09X-013

Stabilizer
Remove the stabilizer bolt.

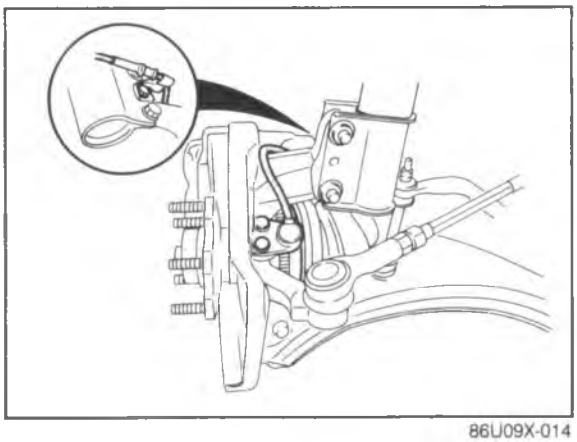

86U09X-014

Wheel speed sensor (ABS)
Remove the speed sensor.

DISASSEMBLY

Disassemble in the sequence shown in the figure referring to the disassembly note for the specially marked parts.

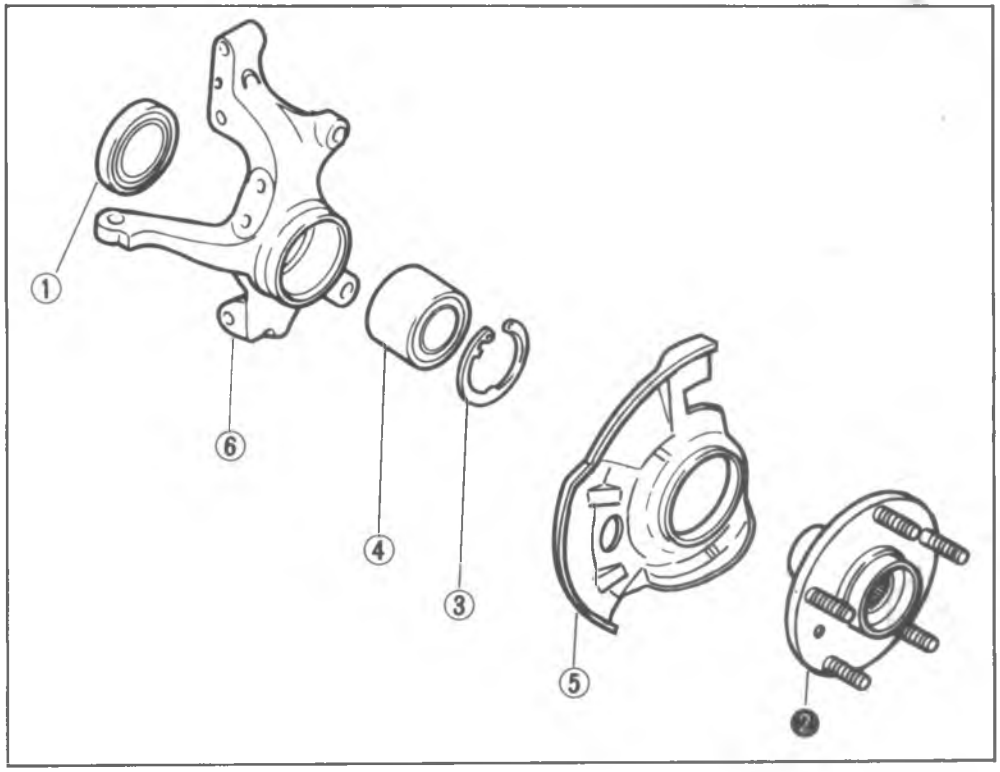

86U09X-015

1. Oil seal
2. Front wheel hub
3. Retaining ring
4. Front wheel bearing
5. Dust cover
6. Knuckle

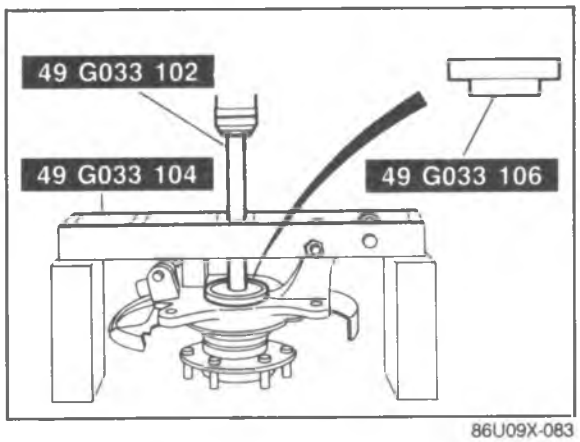

86U09X-083

Disassembly Note
Front wheel hub
Remove the front wheel hub with the **SST**.

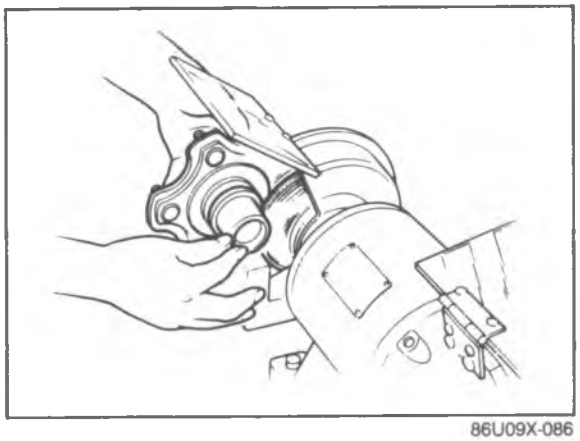

86U09X-086

Note
If the bearing inner race remains on the front wheel hub, grind a section of the bearing inner race to approx. 0.5 mm (0.0197 in). Then remove it with a chisel.

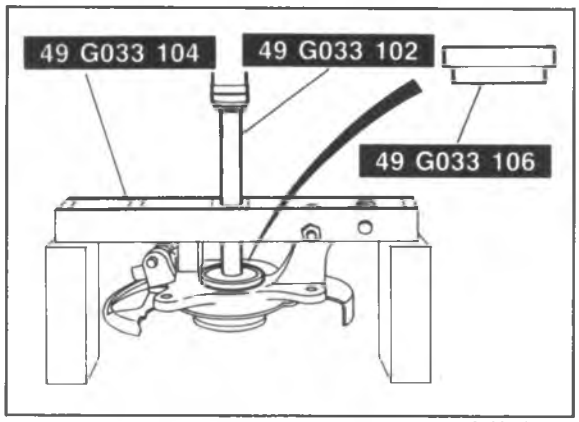

86U09X-016

Front wheel bearing
Remove the front wheel bearing with the **SST**.

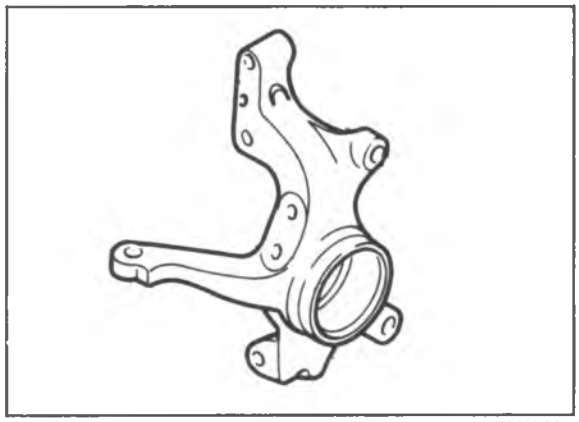
86U09X-084

INSPECTION
Check as described below, replace parts if necessary.
1. Check the knuckle for cracks or damage.

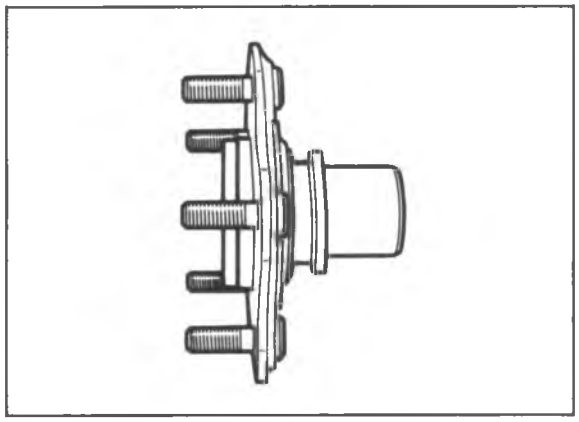
86U09X-098

2. Check the front wheel hub for seizure, cracks or damage.

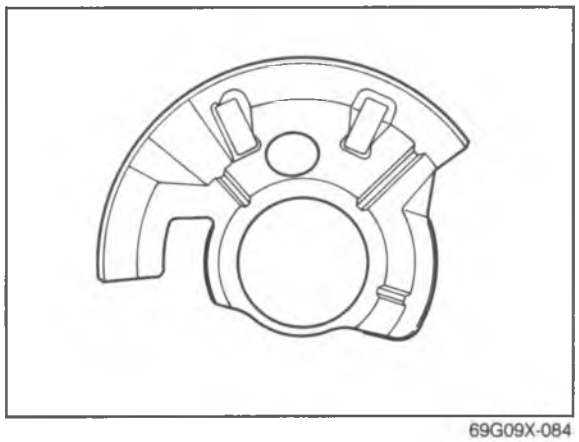
69G09X-084

3. Check the dust cover for cracks or damage.

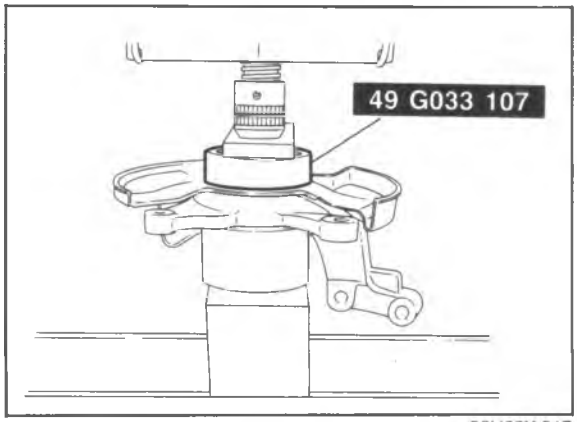

86U09X-017

ASSEMBLY

1. Install new hub bolts. (If applicable)
2. Install a new dust cover with the **SST**.

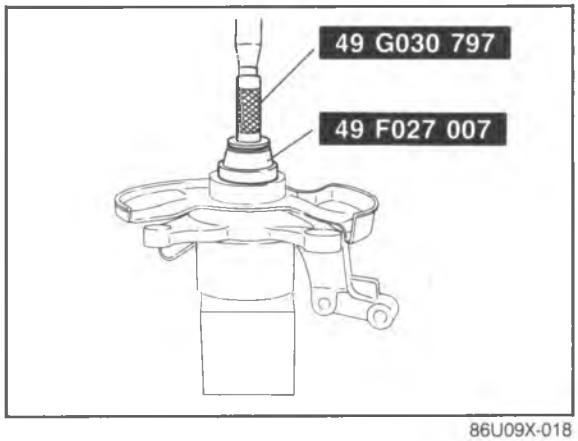

86U09X-018

3. Install a new front wheel bearing with the **SST**.

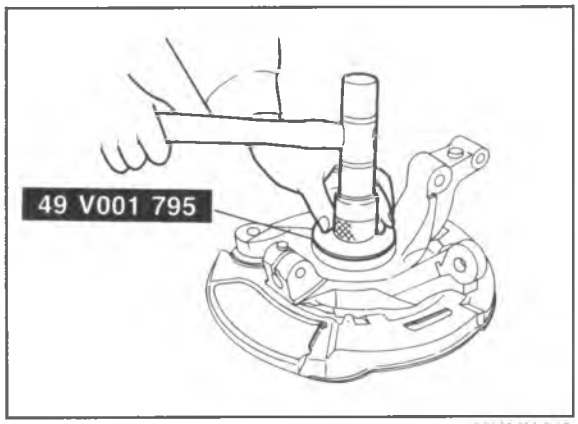

86U09X-019

4. Install the retaining ring.
5. Install a new oil seal with the **SST**.

Note
Apply grease to the oil seal lip.

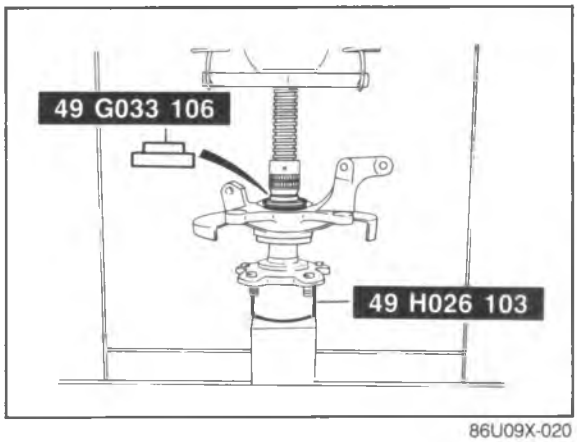

86U09X-020

6. Install the front wheel hub with the **SST**.

INSTALLATION
Torque Specifications

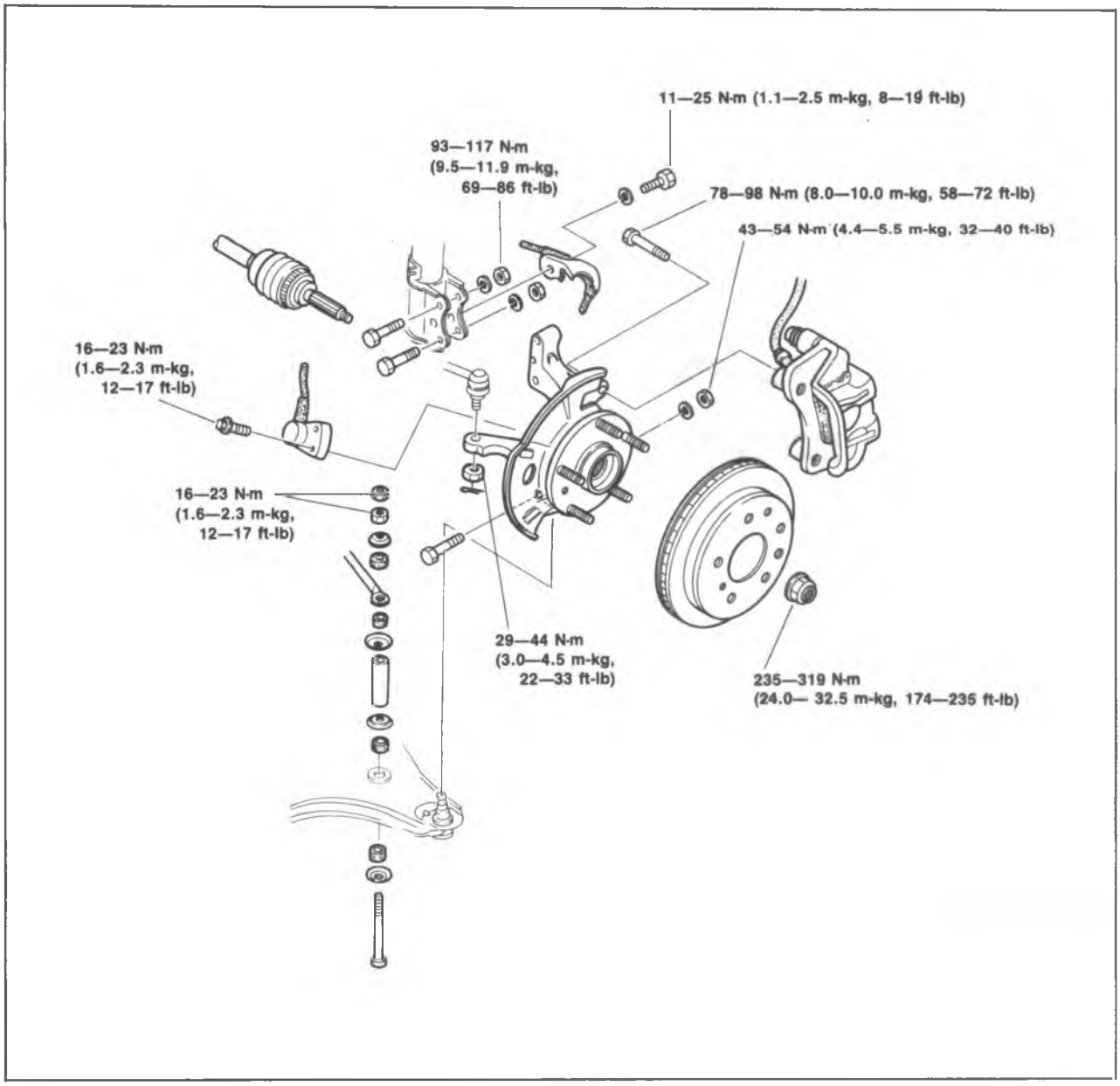

86U09X-021

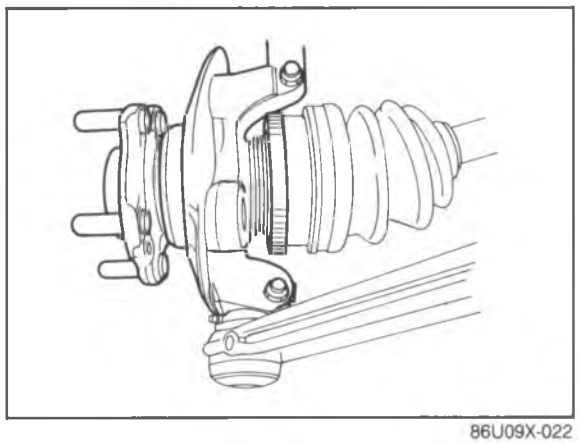

86U09X-022

1. Install the knuckle to the shock absorber.

   Tightening torque: 93—117 N·m (9.5—11.9 m-kg, 69—86 ft-lb)

2. Install the lower arm ball-joint.

   Tightening torque: 43—54 N·m (4.4—5.5 m-kg, 32—40 ft-lb)

3. Install the driveshaft.

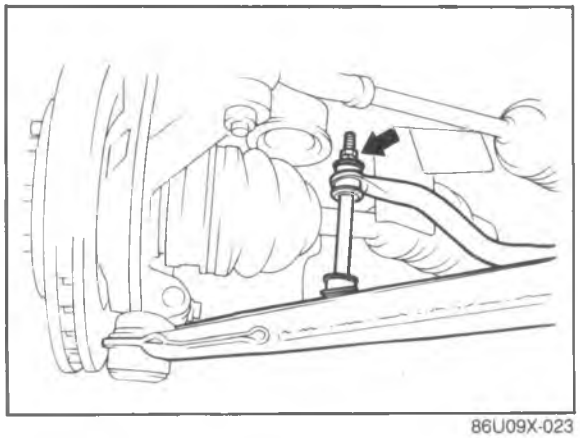

86U09X-023

4. Install the stabilizer.

Dimension: 20.1 mm (0.79 in)

Tightening torque: 16—23 N·m (1.6—2.3 m-kg, 12—17 ft-lb)

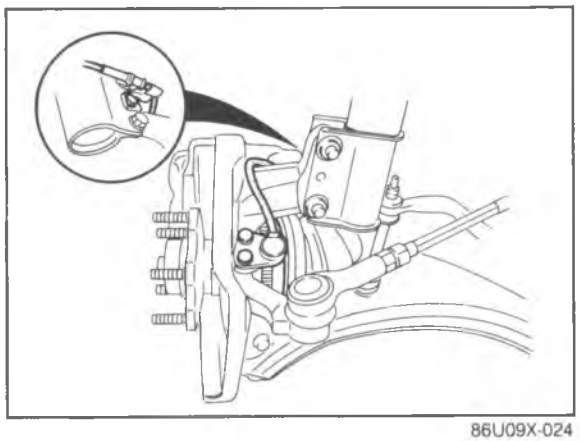

86U09X-024

5. Install the wheel speed sensor. (ABS)

Tightening torque: 16—23 N·m (1.6—2.3 m-kg, 12—17 ft-lb)

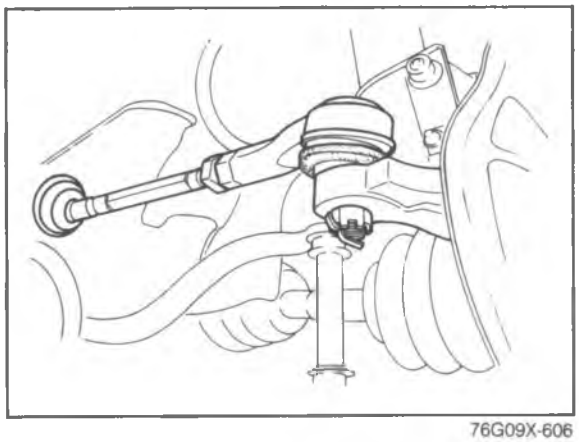

76G09X-606

6. Install the tie-rod end.

Tightening torque: 29—44 N·m (3.0—4.5 m-kg, 22—33 ft-lb)

7. Install the lock nut.

Tightening torque: 235—319 N·m (24.0—32.5 m-kg, 174—235 ft-lb)

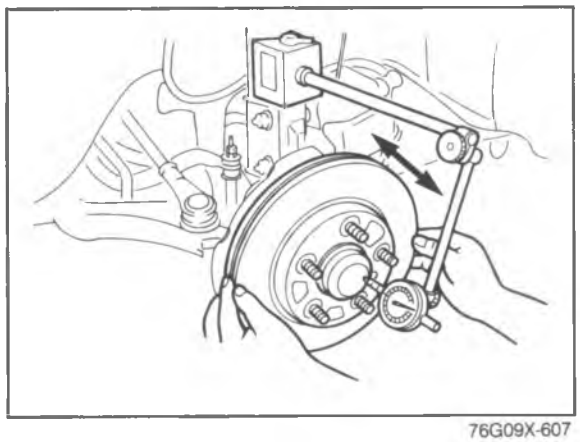

76G09X-607

8. Check the end play. (Refer to page 9—7)

End play: 0.2 mm (0.0079 in) max.

9. Stake the lock nut to groove.
10. Install the caliper assembly.

Tightening torque: 78—98 N·m (8.0—10.0 m-kg, 58—72 ft-lb)

11. Install the wheel.

Tightening torque: 88—118 N·m (9.0—12.0 m-kg, 65—87 ft-lb)

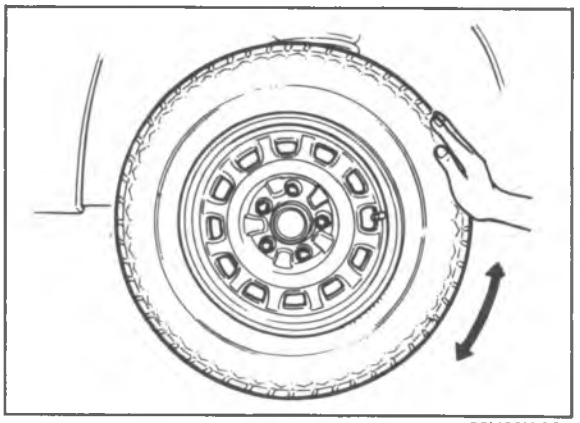

86U09X-027

REAR AXLE

ON-VEHICLE MAINTENANCE

Wheel Bearing Play

1. Jack up the vehicle and support it with safety stands.
2. Check that there is no abnormal noise and that the tire rotates smoothly when rotated by hand.

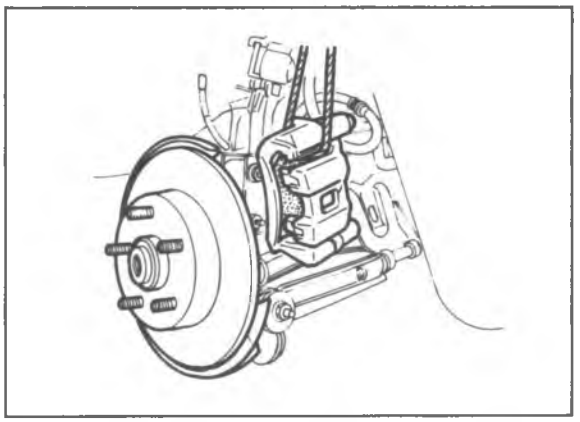

69G09X-012

3. Remove the wheel.
4. Remove the caliper assembly and suspend it using a rope.

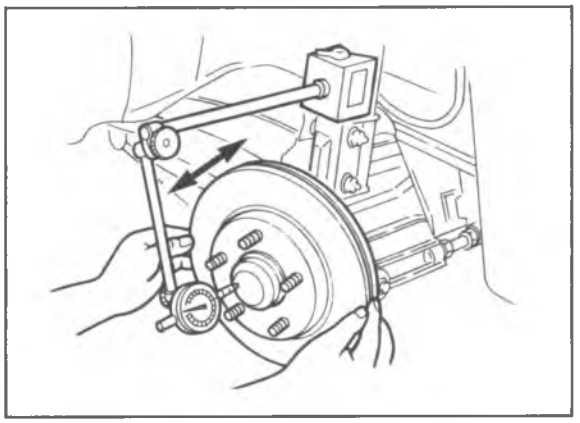

86U09X-028

5. Position a dial indicator against the hub cap, then push and pull the disc plate or brake drum by hand in the axial direction and measure the end play of the wheel bearing.
   If the end play exceeds specification, replace the wheel bearing.

   End play: 0.2 mm (0.0079 in) max.

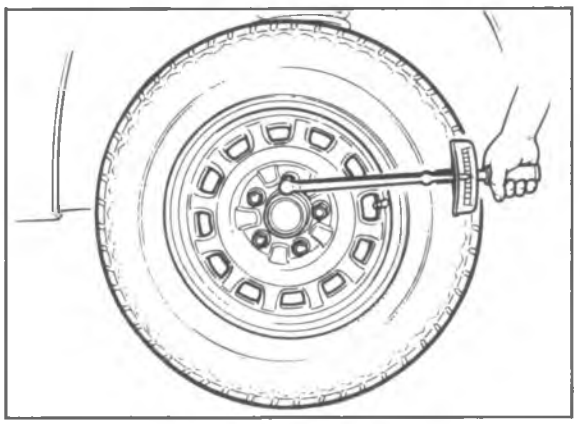

86U09X-029

6. Install the caliper assembly. (Disc)

   Tightening torque: 45—67 N·m (4.6—6.8 m-kg, 33—49 ft-lb)

7. Install the wheel.

   Tightening torque: 88—118 N·m (9.0—12.0 m-kg, 65—87 ft-lb)

[Drum Brake]
REMOVAL
Remove in the sequence shown in the figure referring to the removal note for the specially marked parts.

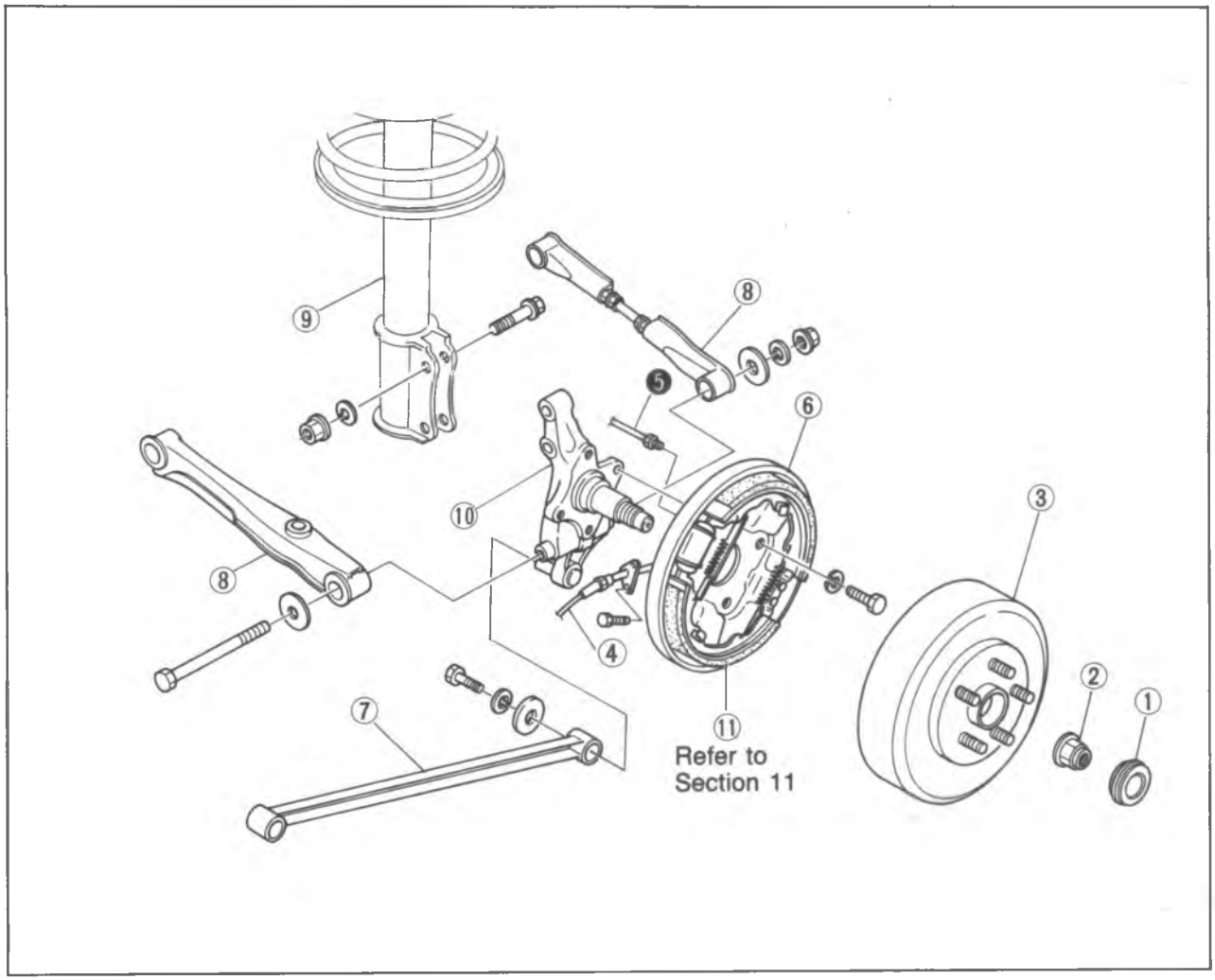

86U09X-030

1. Hub cap
2. Lock nut
3. Brake drum
4. Parking brake cable
5. Brake pipe
6. Back plate
7. Trailing link
8. Lateral link
9. Shock absorber
10. Knuckle spindle
11. Brake shoe assembly

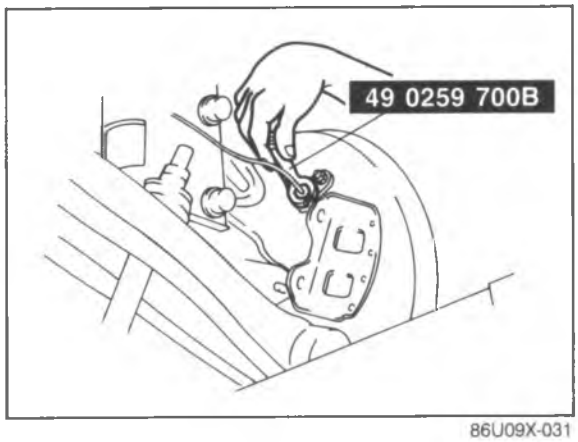

86U09X-031

Removal Note
Disconnect the brake pipe with the **SST**.

DISASSEMBLY

Disassemble in the sequence shown in the figure referring to the disassembly note for the specially marked parts.

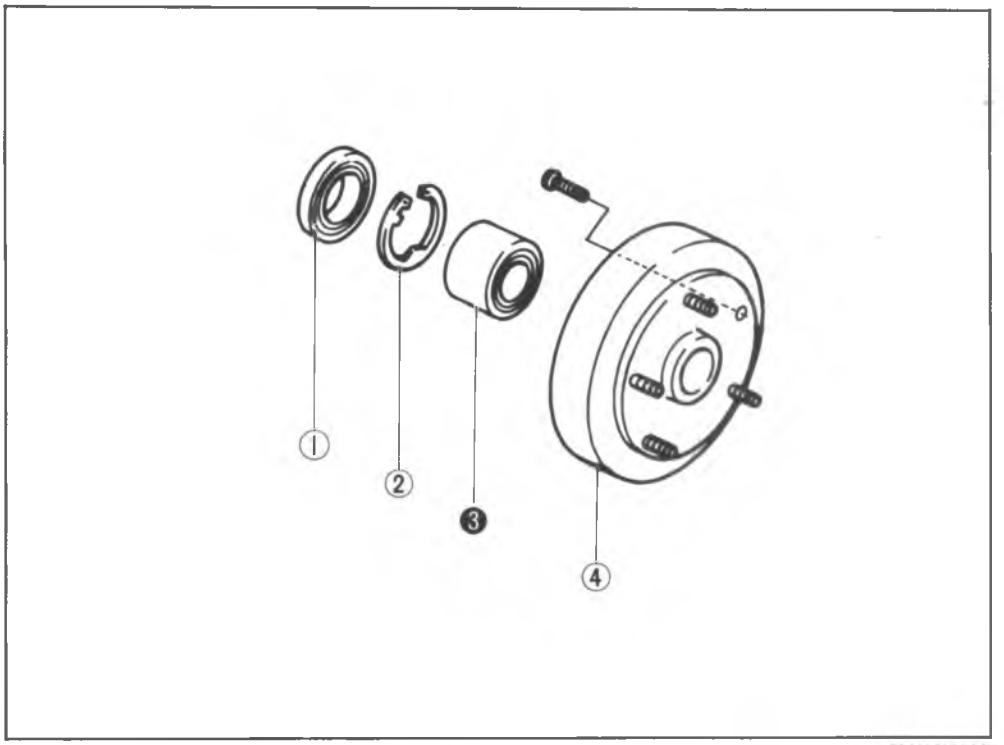

86U09X-032

1. Oil seal
2. Retaining ring
3. Rear wheel bearing
4. Brake drum

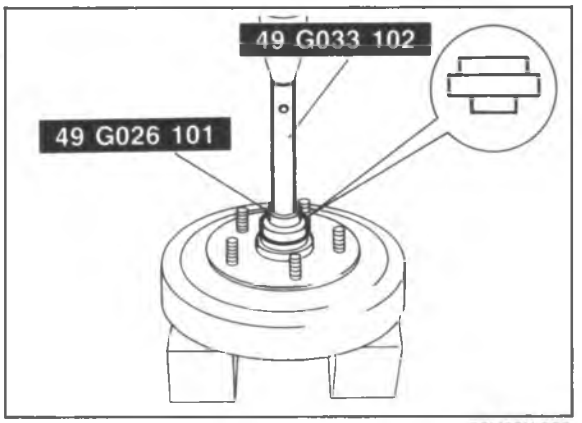

86U09X-033

Disassembly Note

Bearing

Remove the rear wheel bearing with the **SST**.

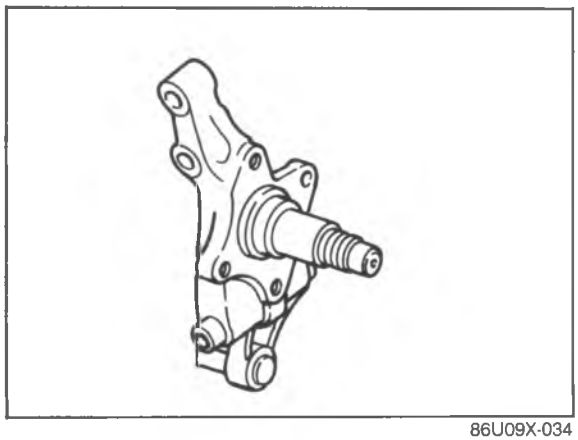

86U09X-034

INSPECTION

Knuckle Spindle

1. Cracks or damage.
2. Wear or rust on the oil seal contact surface.

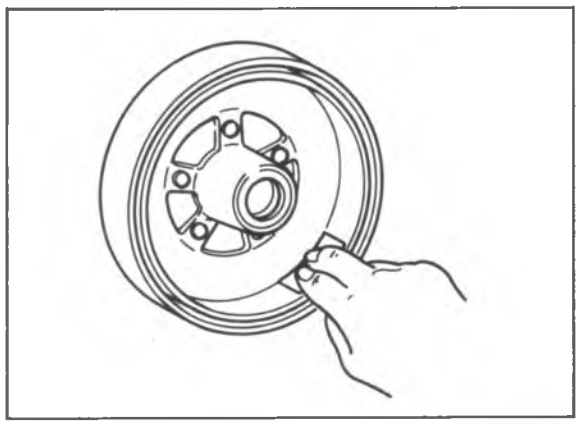

61G09X-036

Brake Drum

Wear or damage to brake drum.

Note
Remove minor rust with sandpaper

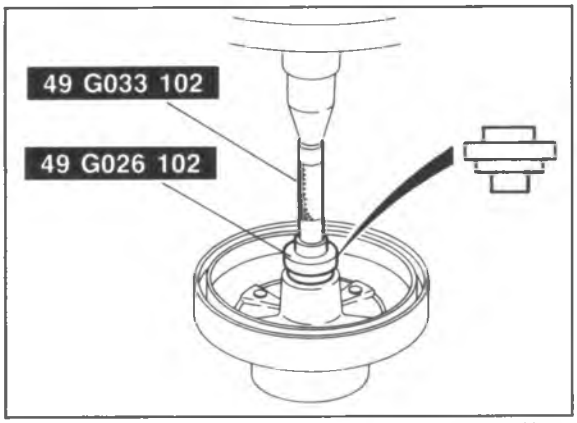

86U09X-035

ASSEMBLY

1. Install a new rear wheel bearing with the **SST**.

86U09X-036

2. Install the retaining ring.
3. Install a new oil seal with the **SST**.

Note
Apply grease to the oil seal lip.

INSTALLATION

Install in the reverse order of removal referring to the installation note.

Torque specifications

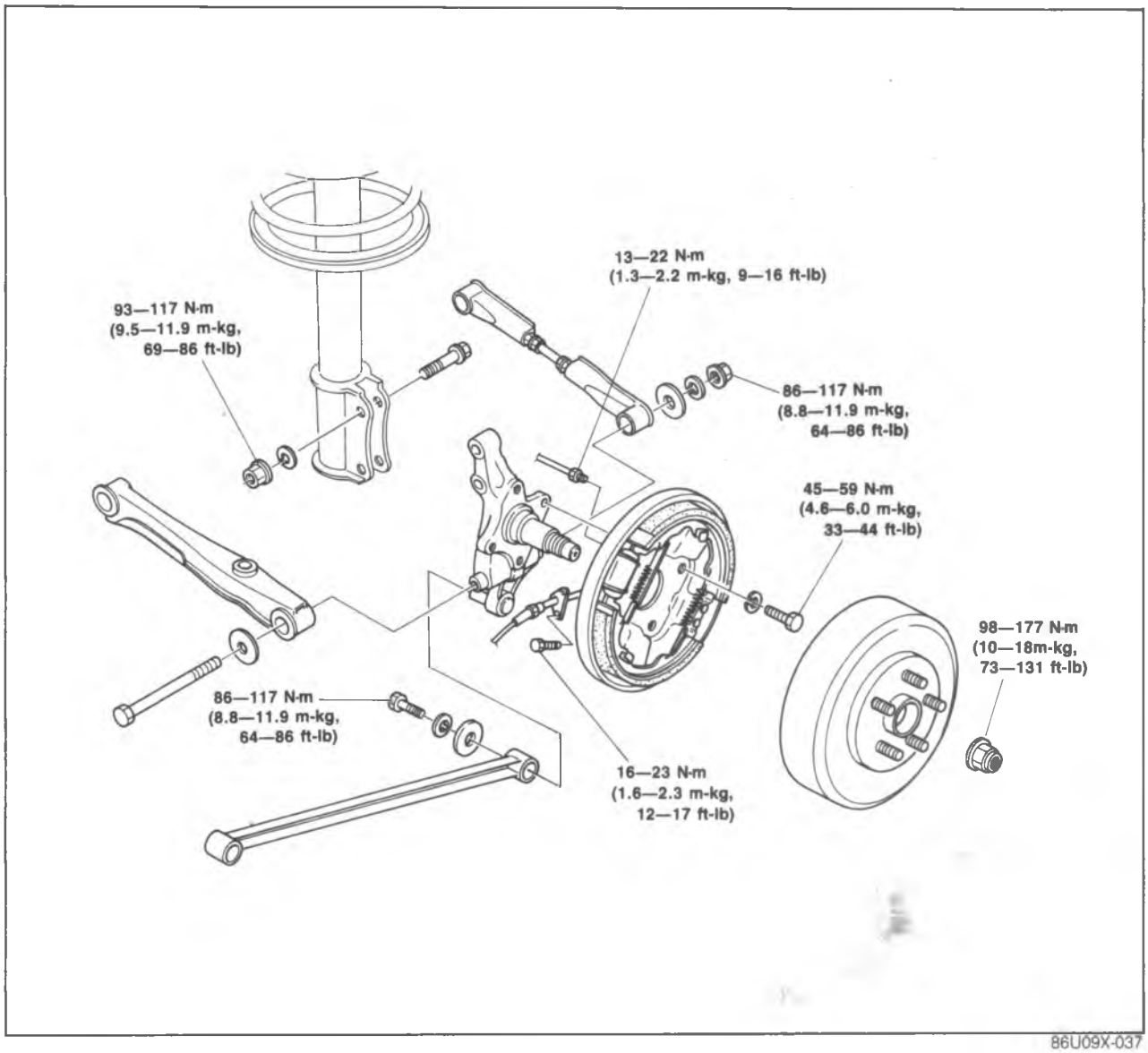

86U09X-037

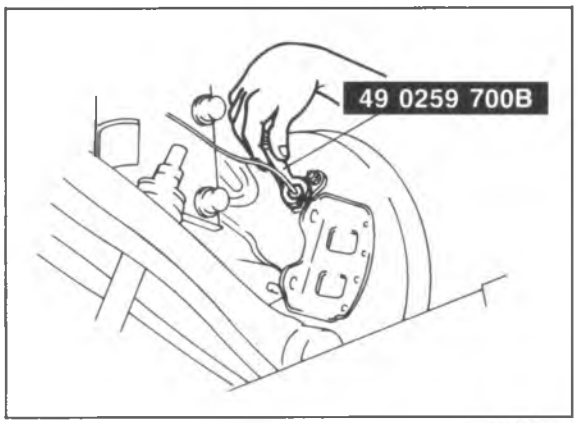

86U09X-038

Installation Note

Brake pipe

1. Connect the brake pipe with the **SST**.

   Tightening torque: 13—22 N·m (1.3—2.2 m-kg, 9—16 ft-lb)

2. Bleed the air. (Refer to Section 11)

End play

Measure the end play. (Refer to page 9—16)

[Disc Brake]
REMOVAL (2WS)
Remove in the sequence shown in the figure.

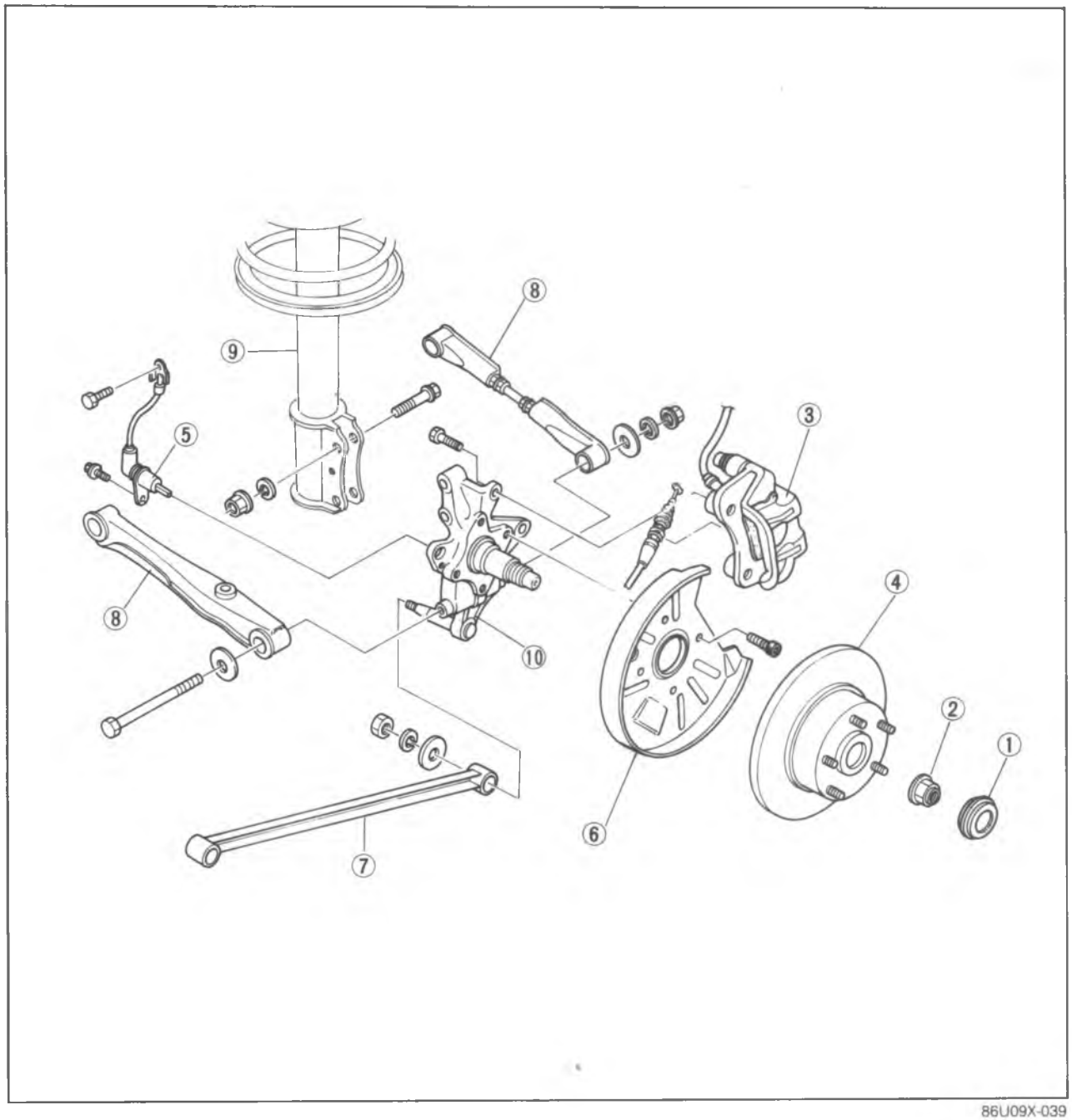

86U09X-039

1. Hub cap
2. Lock nut
3. Caliper assembly
4. Disc plate
5. Wheel speed sensor (ABS)
6. Dust cover
7. Trailing link
8. Lateral link
9. Shock absorber
10. Knuckle spindle

REMOVAL (4WS)

Remove in the sequence shown in the figure referring to the removal note for the specially marked parts.

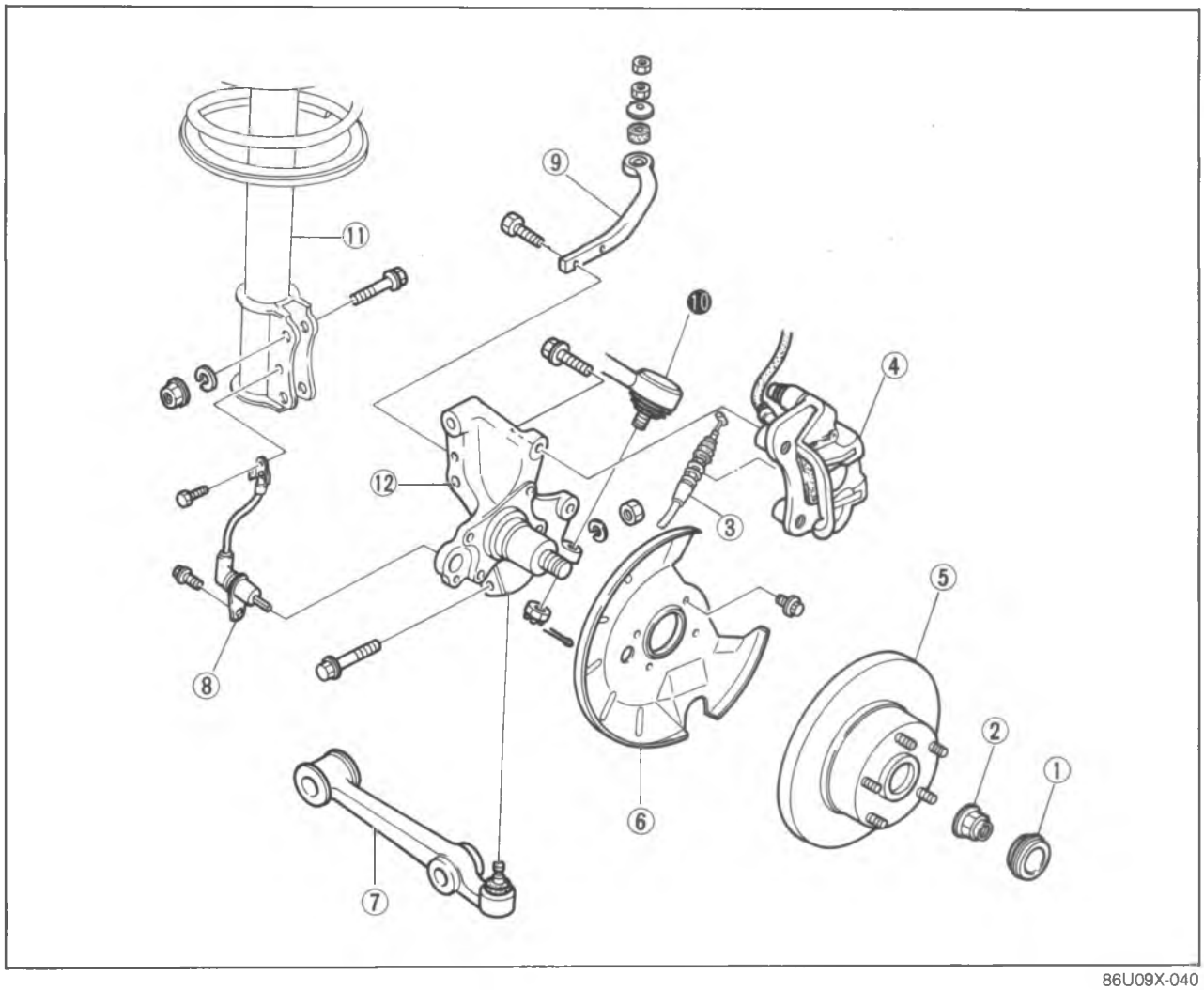

86U09X-040

1. Hub cap
2. Lock nut
3. Parking brake cable
4. Caliper assembly
5. Disc plate
6. Dust cover
7. Control link
8. Wheel speed sensor (ABS)
9. Stabilizer bracket
10. Tie-rod end
11. Shock absorber
12. Knuckle spindle

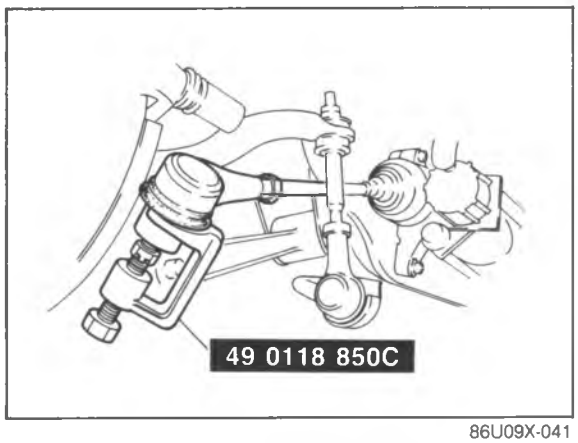

86U09X-041

Removal Note

Tie-rod end

Remove the tie-rod end from the knuckle spindle with the **SST**.

DISASSEMBLY

Disassemble in the sequence shown in the figure referring to the disassembly note for the specially marked parts.

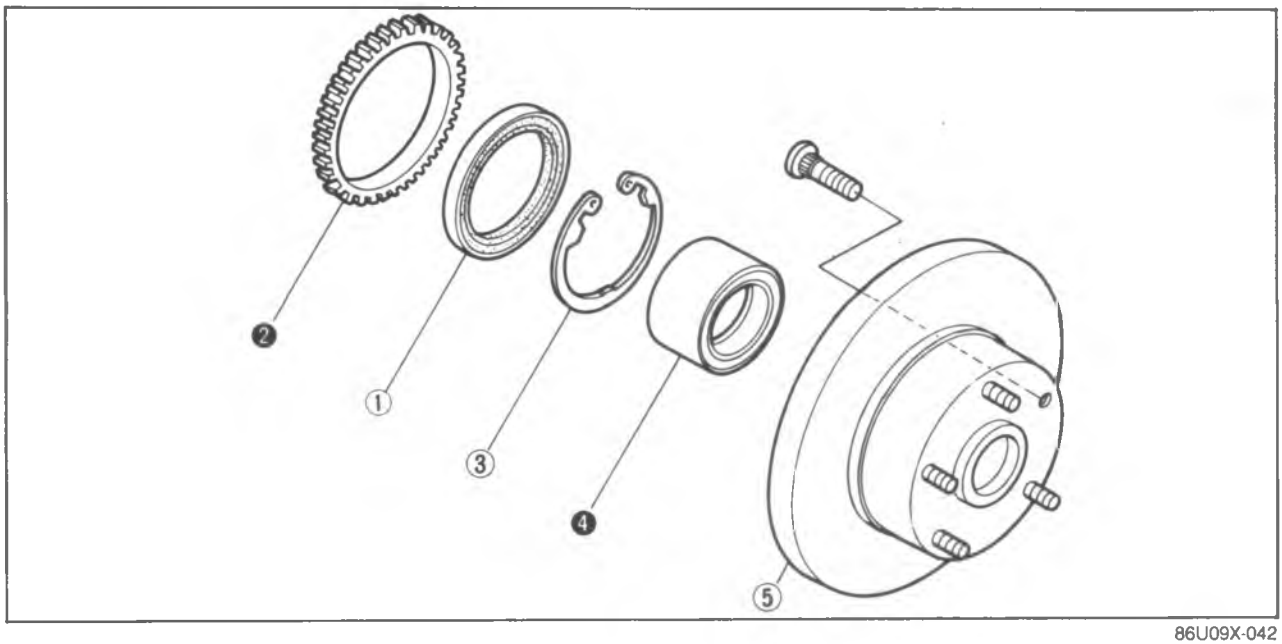

86U09X-042

1. Oil seal
2. Sensor rotor (ABS)
3. Retaining ring
4. Rear wheel bearing
5. Disc plate

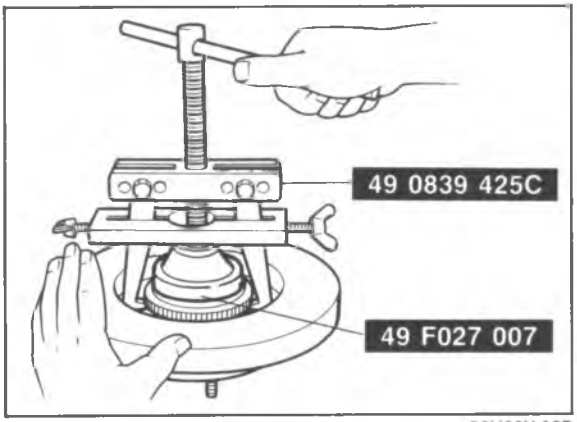

86U09X-087

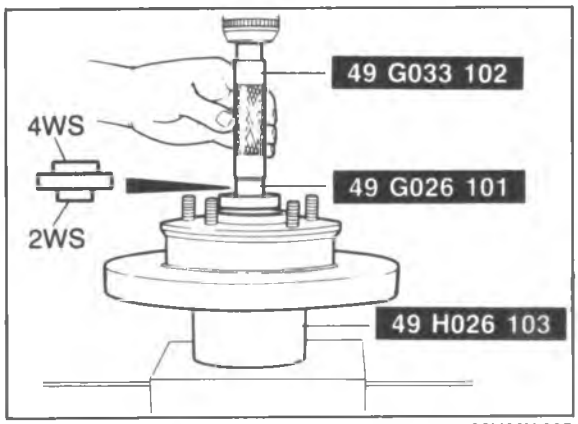

86U09X-085

Disassembly Note

Note
a) Do not remove the hub bolts unless necessary.
b) Do not reuse the hub bolts if removed.

Sensor rotor (ABS)
Remove the sensor rotor with the **SST**.

Note
a) Do not remove the sensor rotor unless necessary.
b) Do not reuse the sensor rotor if removed.

Rear wheel bearing
Remove the rear wheel bearing with the **SST**.

Note
Do not reuse the rear wheel bearing if removed.

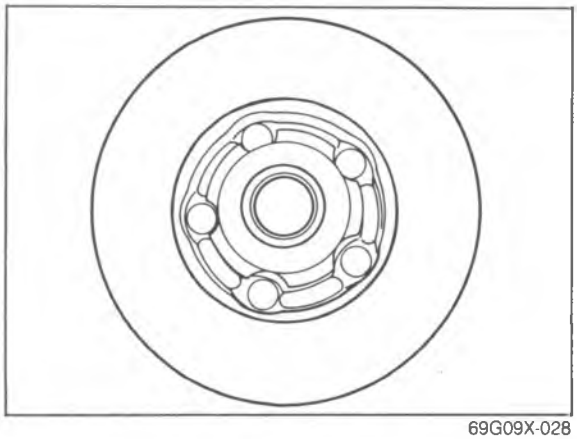

69G09X-028

INSPECTION

Check as described below, replace parts if necessary.

1. Check the hub for cracks or damage.

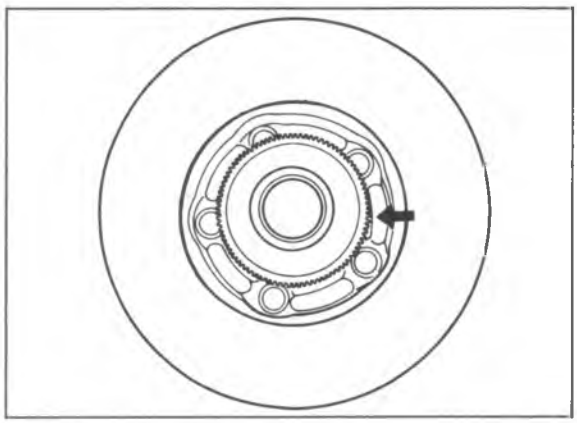

69G09X-029

2. Check the sensor rotor for cracks or damage.

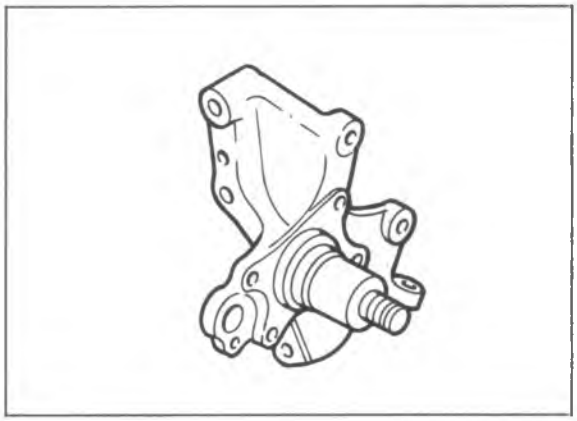

86U09X-043

3. Check the knuckle spindle for cracks or damage, and the oil seal friction surface for wear or rust.

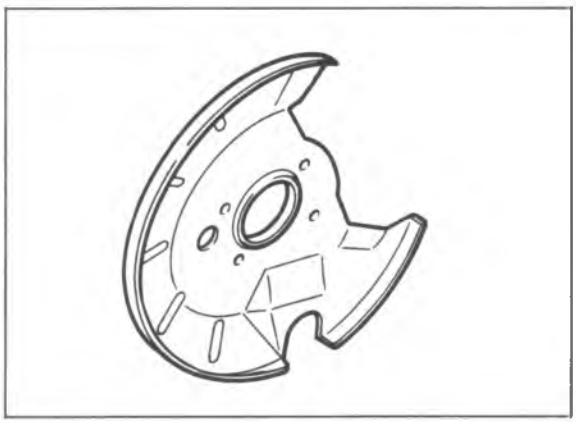

69G09X-031

4. Check the dust cover for damage.
5. Check the hub cap for damage.

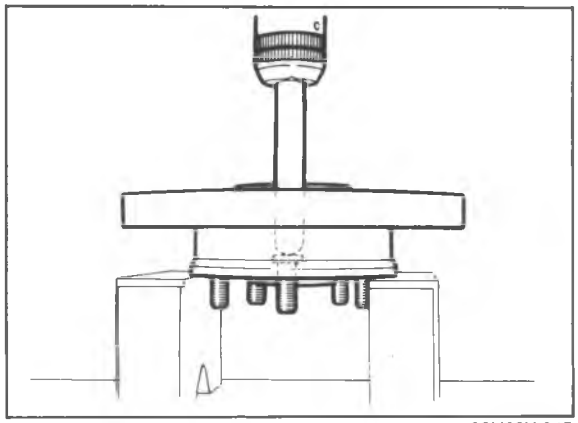

86U09X-045

ASSEMBLY

1. Install new hub bolts.

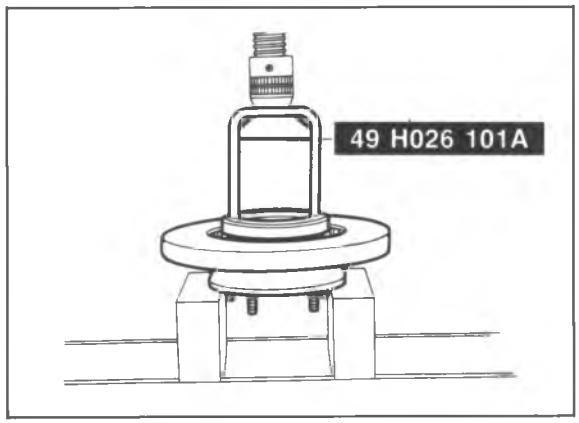

86U09X-046

2. Install a new sensor rotor with the **SST**. (ABS)

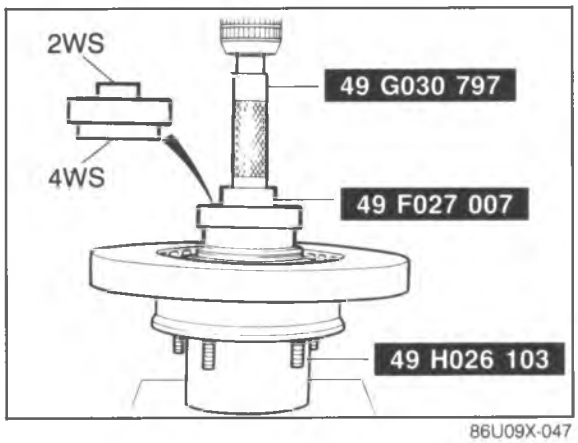

86U09X-047

3. Install a new rear wheel bearing with the **SST**.
4. Install the retaining ring.

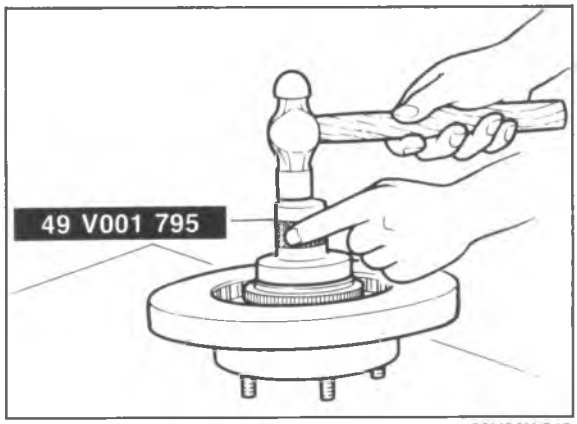

86U09X-048

5. Install a new oil seal with the **SST**.

Note
Apply grease to the oil seal lip.

INSTALLATION (2WS)

Install in the reverse order of removal.

Torque Specifications

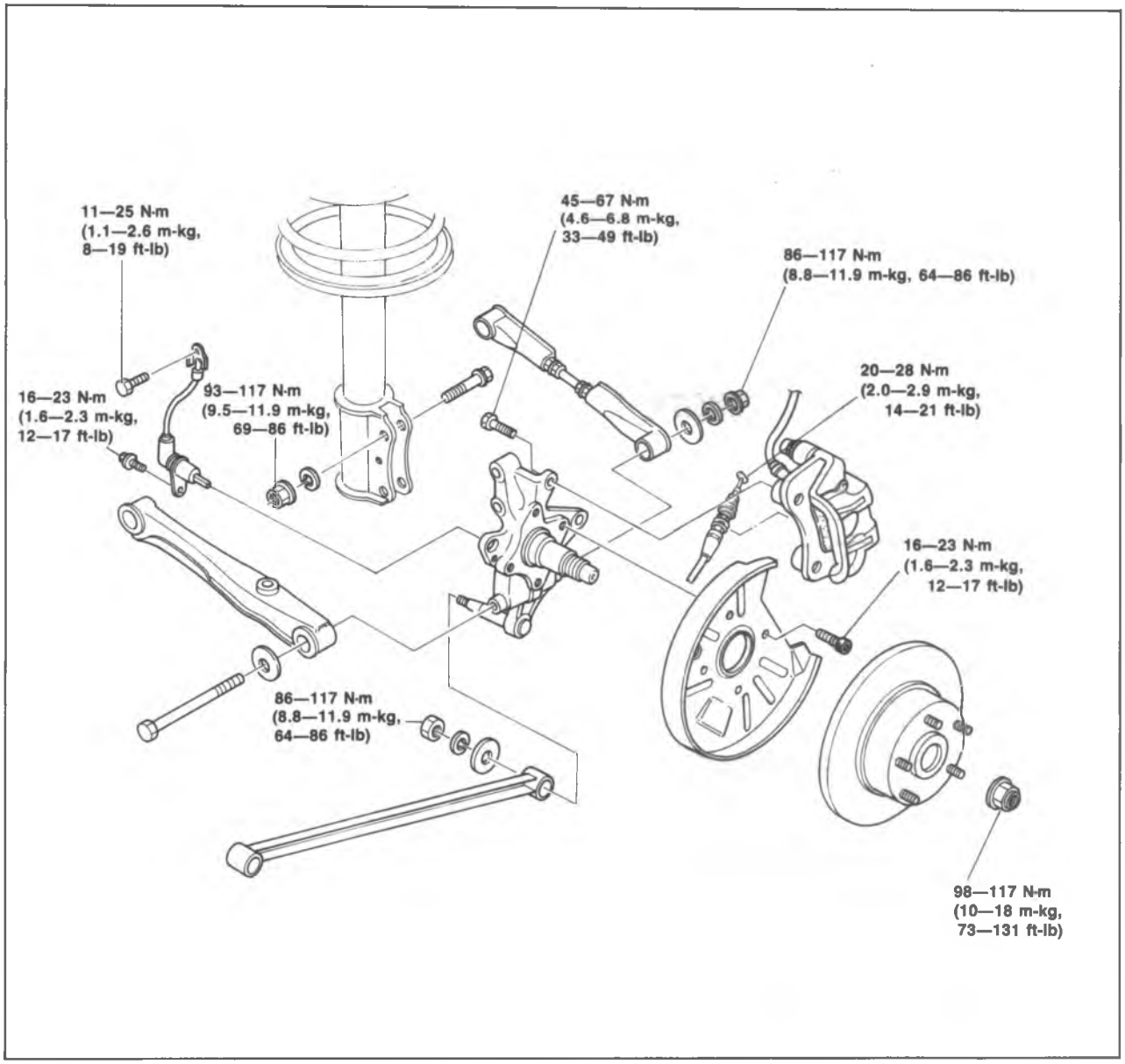

86U09X-049

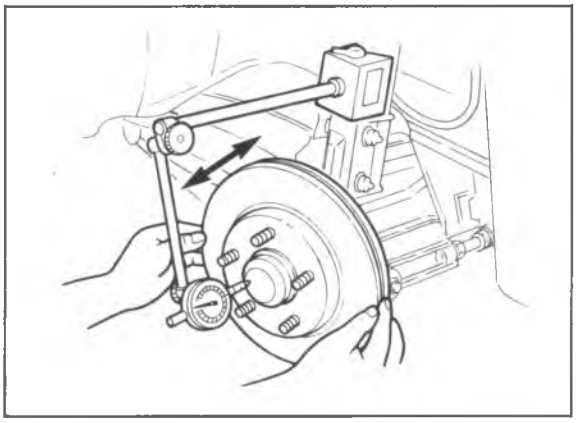

86U09X-050

Installation Note

End play

Measure the end play. (Refer to page 9—16)

End play: 0.2 mm (0.0079 in) max.

INSTALLATION (4WS)

Install in the reverse order of removal.

Torque Specifications

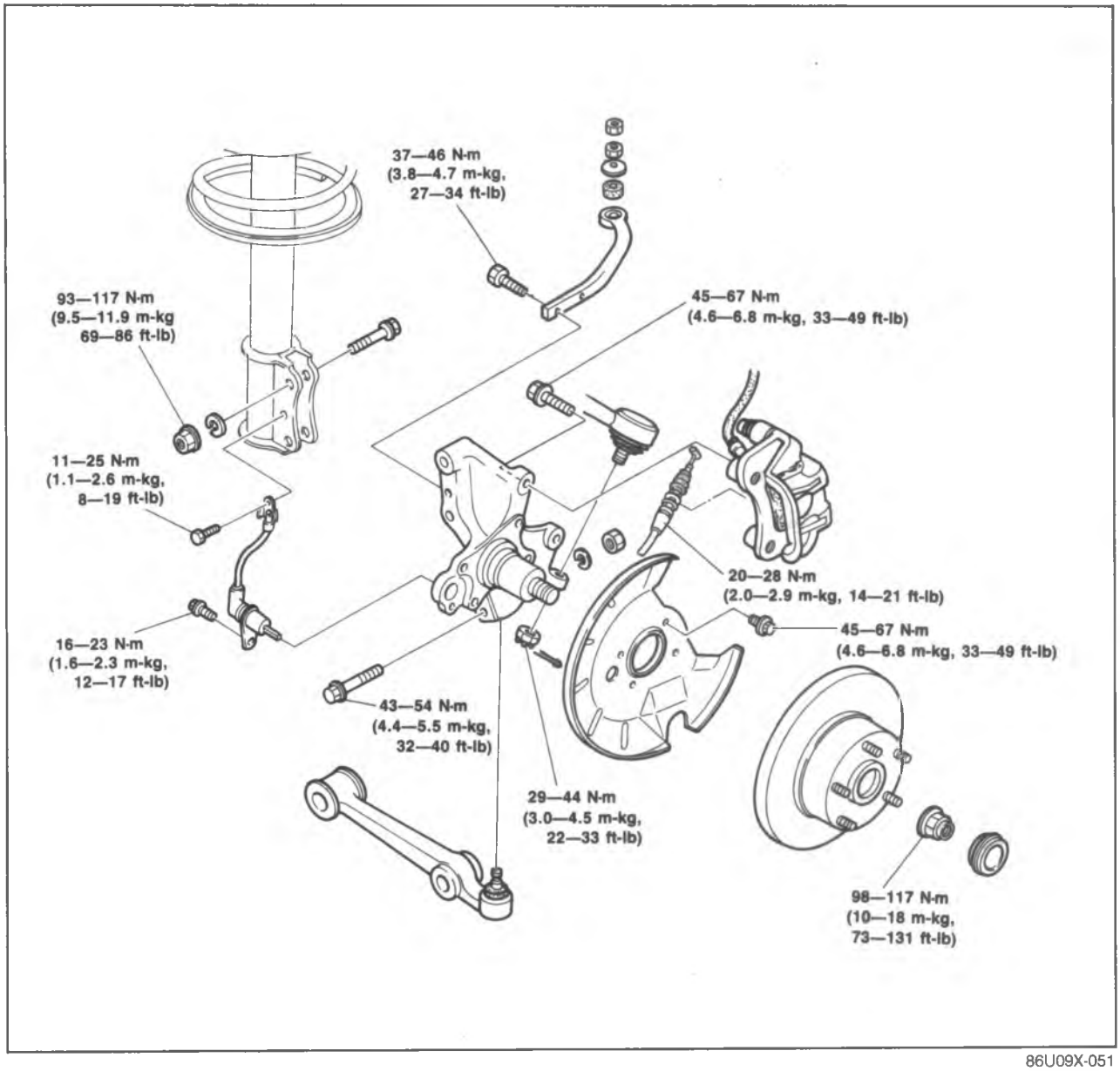

86U09X-051

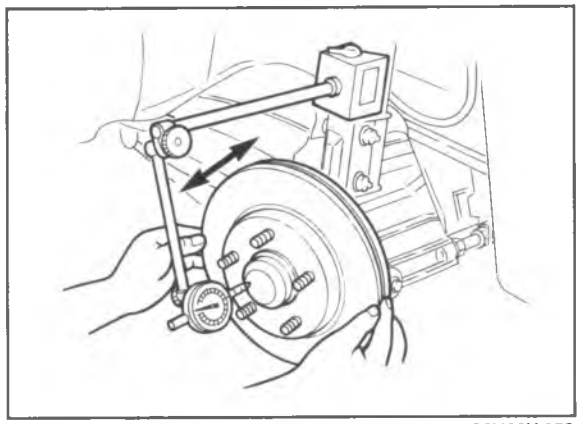

86U09X-052

Installation Note
End play

Measure the end play. (Refer to page 9—16)

End play: 0.2 mm (0.0079 in) max.

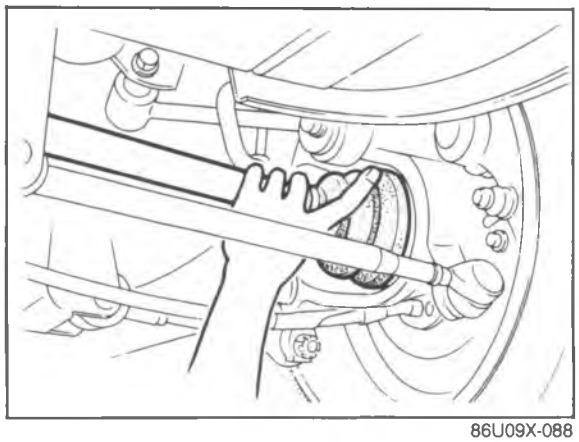

86U09X-088

DRIVESHAFT

ON-VEHICLE MAINTENANCE

Boot

Check the boots on the driveshaft for cracks, damage, grease leakage or loose boot bands. Replace if necessary.

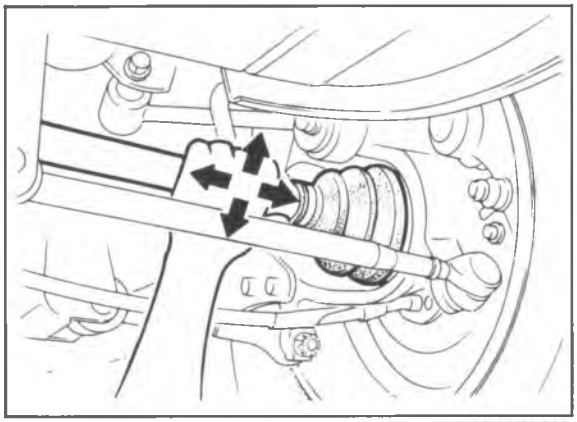

86U09X-089

Spline Looseness

Turn the driveshaft by hand and check that the spline and joint are not excessively loose.
Replace if necessary.

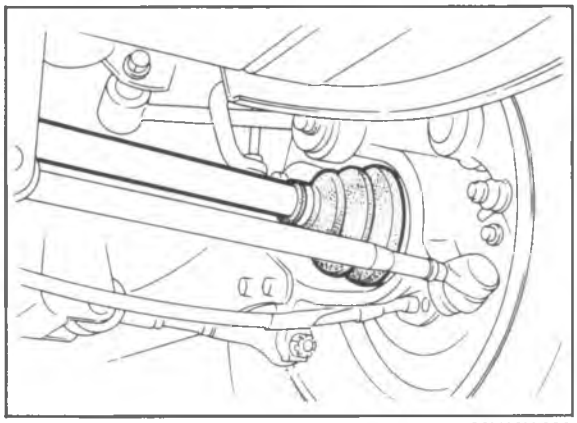

86U09X-090

Twisted or Cracked

Check that the driveshaft is not twisted or cracked. Replace if necessary.

REMOVAL

Remove in the sequence shown in the figure referring to the removal note for the specially marked parts.

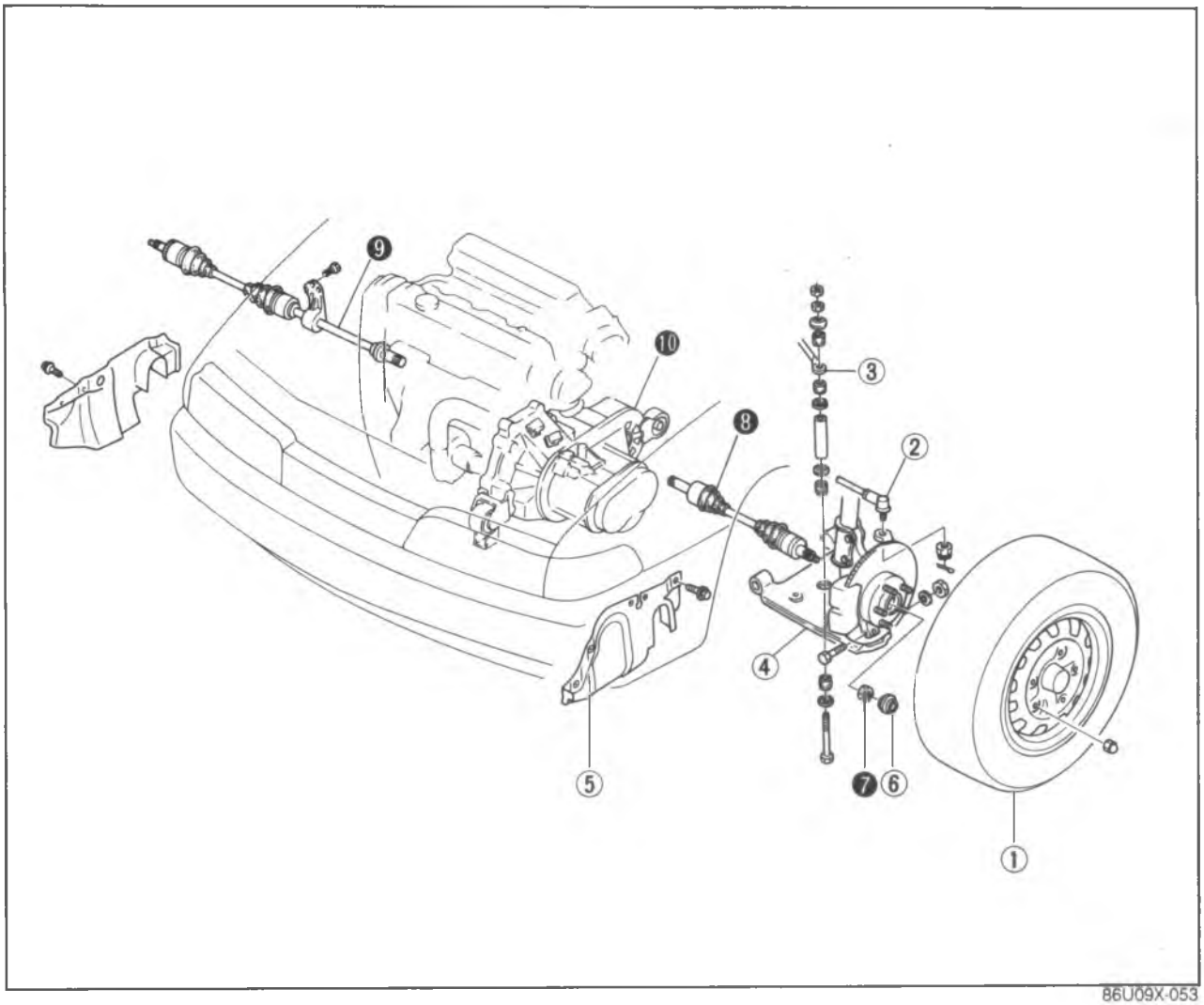

86U09X-053

1. Wheel
2. Tie-rod end
3. Stabilizer
4. Lower arm
5. Splash shield
6. Hub cap
7. Lock nut
8. Driveshaft
9. Joint shaft
10. Transaxle

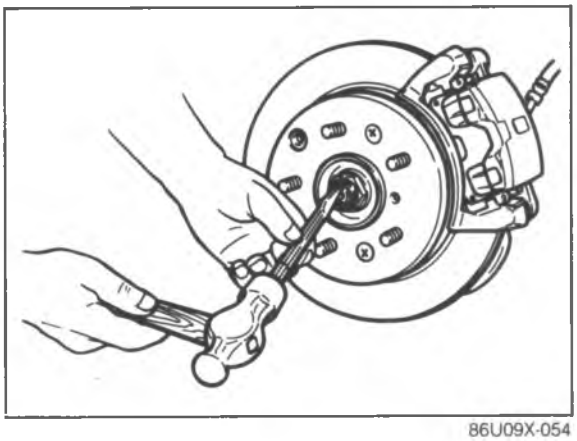

86U09X-054

Removal Note

Lock nut

Applying the brakes. Raise the lock nut tab and loosen it. Do not remove it.

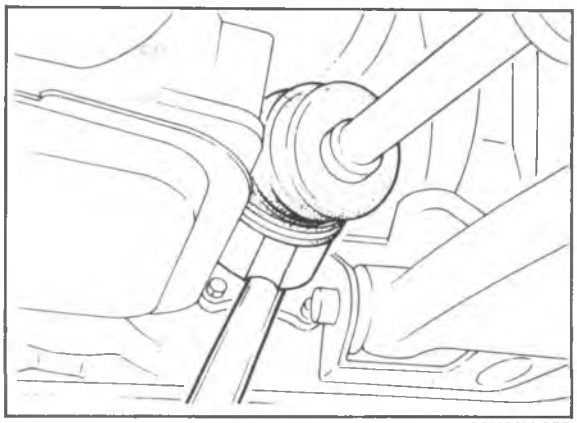

86U09X-055

Driveshaft
Disconnect the driveshaft from the transaxle with a prybar.

Note
Do not damage the boot or the oil seal.

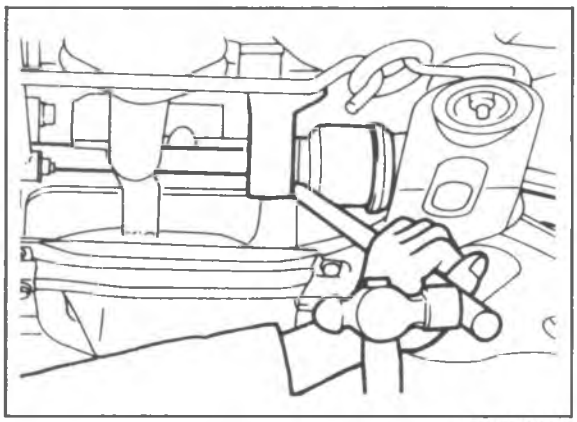

86U09X-056

Joint shaft
As shown in the figure, insert a pry bar between the driveshaft and the joint shaft and tap on the bar to uncouple them.

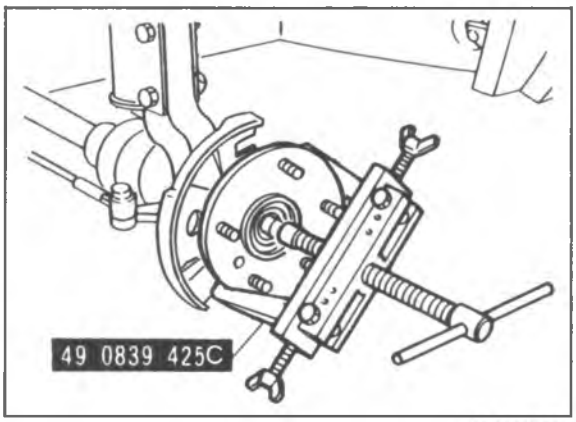

76G09X-608

Front wheel hub
If the driveshaft is stuck to the front wheel hub and can't be removed, use the **SST** to push the shaft out.

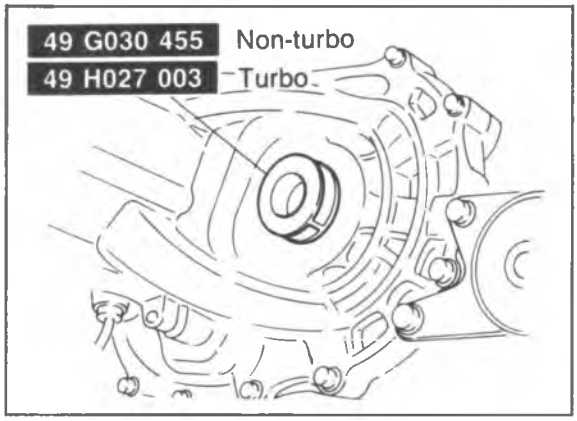

86U09X-058

Differential
Install the **SST** to hold the side gear after removing the driveshaft.

[MTX]
DISASSEMBLY
Disassemble in the sequence shown in the figure referring to the disassembly note for specially marked parts.

Note
a) Clamp the shaft in a vice. Use protectors in the vice to avoid damage.
b) Do not allow dirt or foreign matter in the joint during disassembly or assembly.
c) Do not disassemble the ball-joint at the wheel side. Do not wipe the grease off if there is no problem.
d) Do not remove the clip used to secure the outer ring to the ball-joint at the differential side if there is no problem.
If the clip is removed, replace it with a new one.

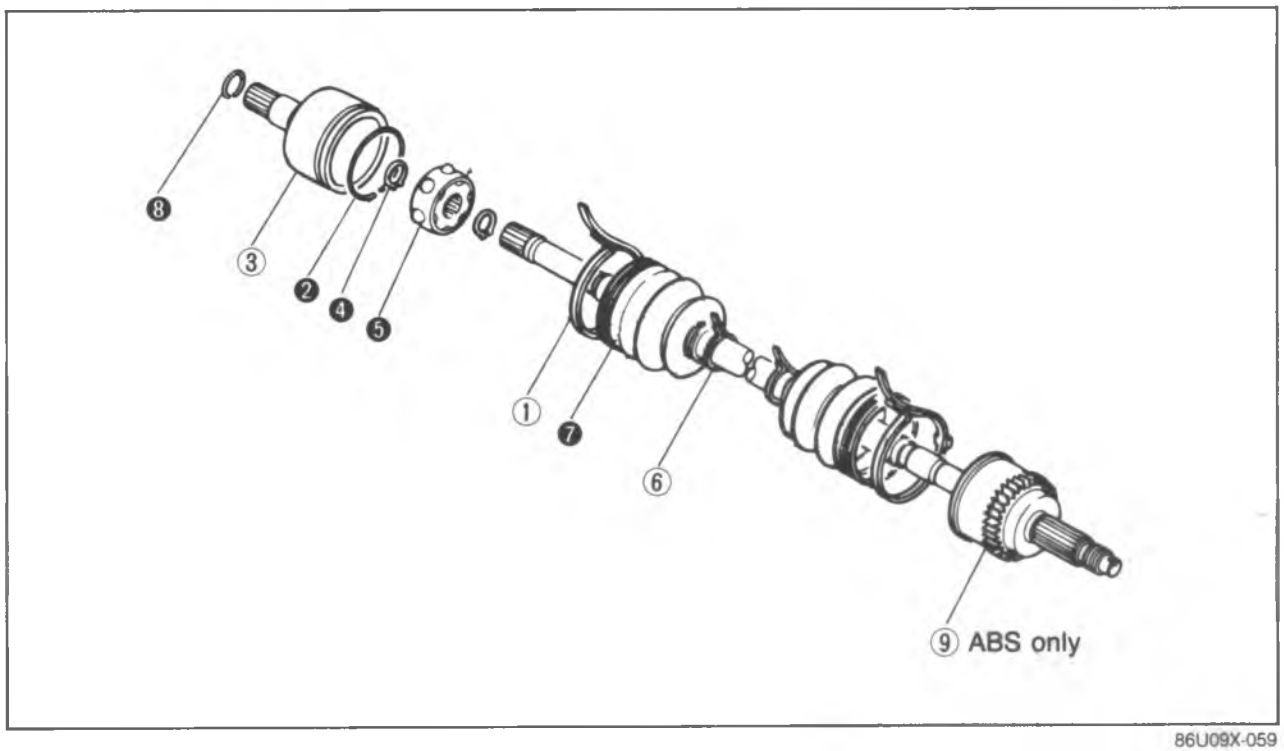

86U09X-059

1. Boot band
2. Clip
3. Outer ring
4. Snap ring
5. Ball joint
6. Boot band
7. Boot
8. Clip
9. Sensor rotor (Refer to Section 11)

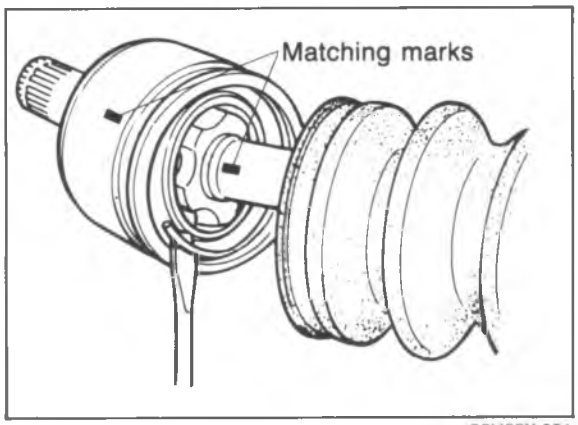

86U09X-091

Clip
1. Make matching marks on the driveshaft and outer ring for proper reassembly.

Note
Mark with paint, do not use a punch.

2. Remove the clip.

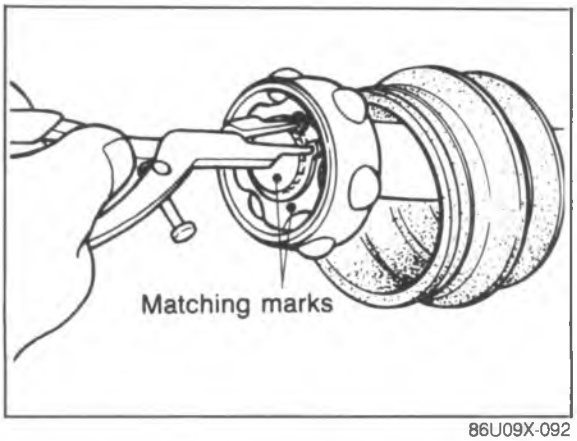

86U09X-092

Snap ring

1. Make matching marks on the driveshaft end and inner ring.
2. Remove the snap ring using snap ring pliers.

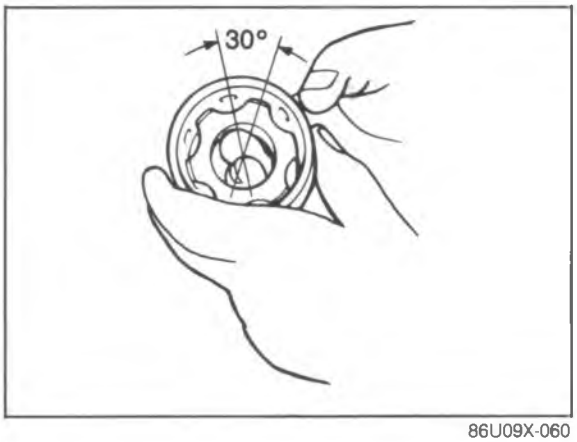

86U09X-060

Bails, inner ring and cage

1. Make matching marks on the inner ring and cage.

   Note
   Mark with paint, do not use a punch.

2. Turn the cage approximately 30°, then pull it away from the inner ring.

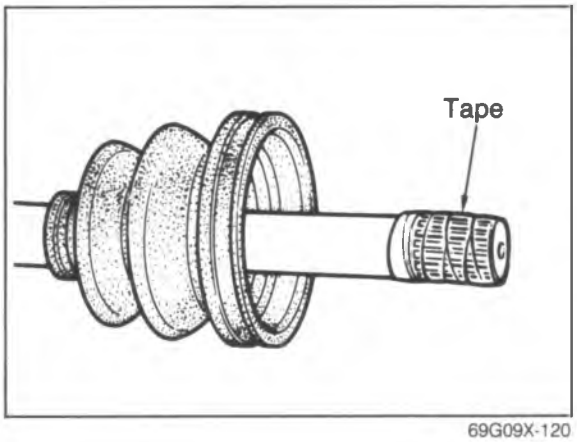

69G09X-120

Boot

1. Wrap the shaft splines with tape.
2. Remove the boot.

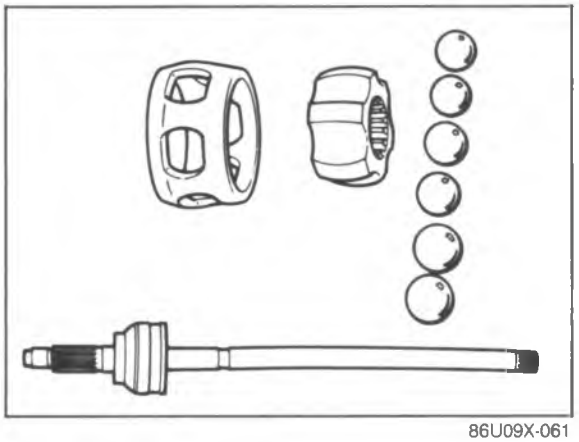

86U09X-061

INSPECTION

Wash the parts. Check and replace all damaged parts.

1. Twisted, bent, or damaged shaft.
2. Worn or scored splines.
3. Worn, rusted, or damaged outer ring.

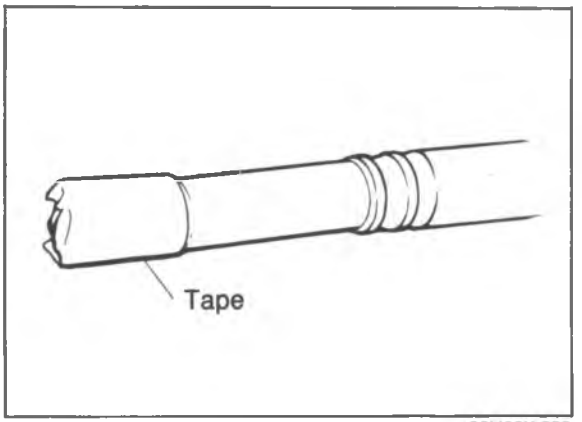

86U09X-093

ASSEMBLY

Boot

Wrap the shaft splines with tape before installing the boot.

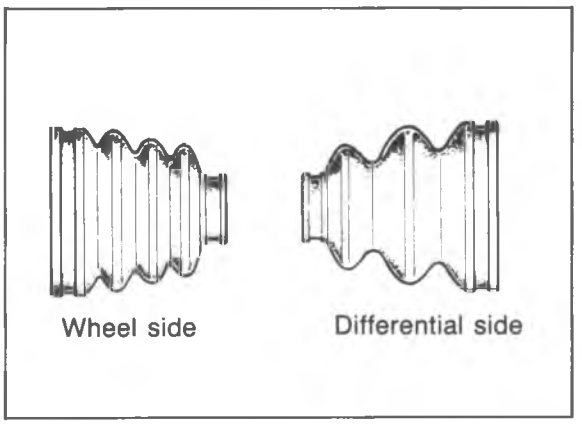

86U09X-062

Note

a) The wheel side and differential side boots are different as shown in the figure.

b) Fill the inside of the ball joint with the specified grease included in the kit.

c) Securely fit the boot to the shaft and the outer race boot grooves.

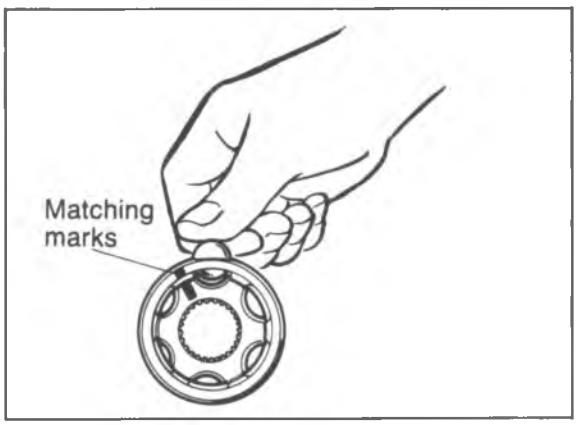

86U09X-094

Balls, inner ring and cage

1. Align the matching marks and install the balls.

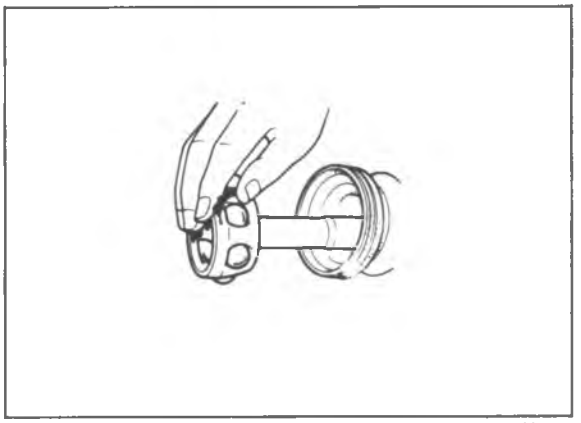

86U09X-095

2. Apply molybdenum disulfide grease to the joint.

Note

Do not use other than specified grease.

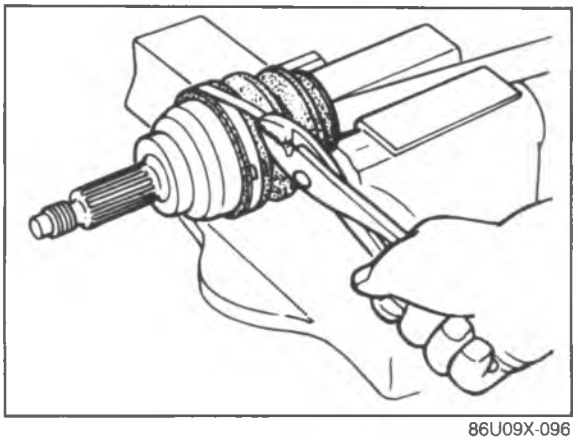

86U09X-096

Boot Band
Tighten the boot band.

Note
a) Use a new band.
b) Fold the band in the direction opposite the forward rotation of the driveshaft.

1. Fold the band back by pulling on the end of the band.

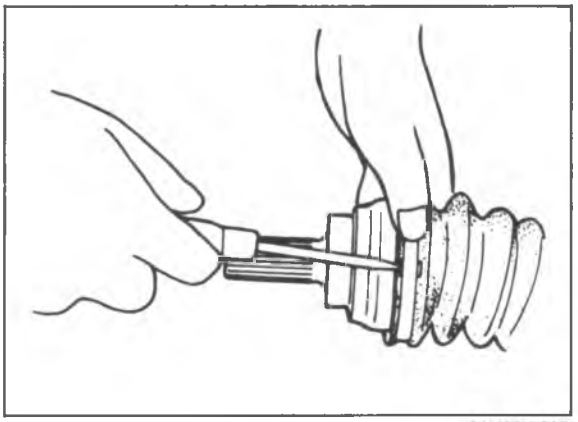

86U09X-097

2. Bend the locking clip to lock the end of the band.

[ATX]
DISASSEMBLY
Disassemble in the sequence shown in the figure referring to the disassembly note for the specially marked parts.

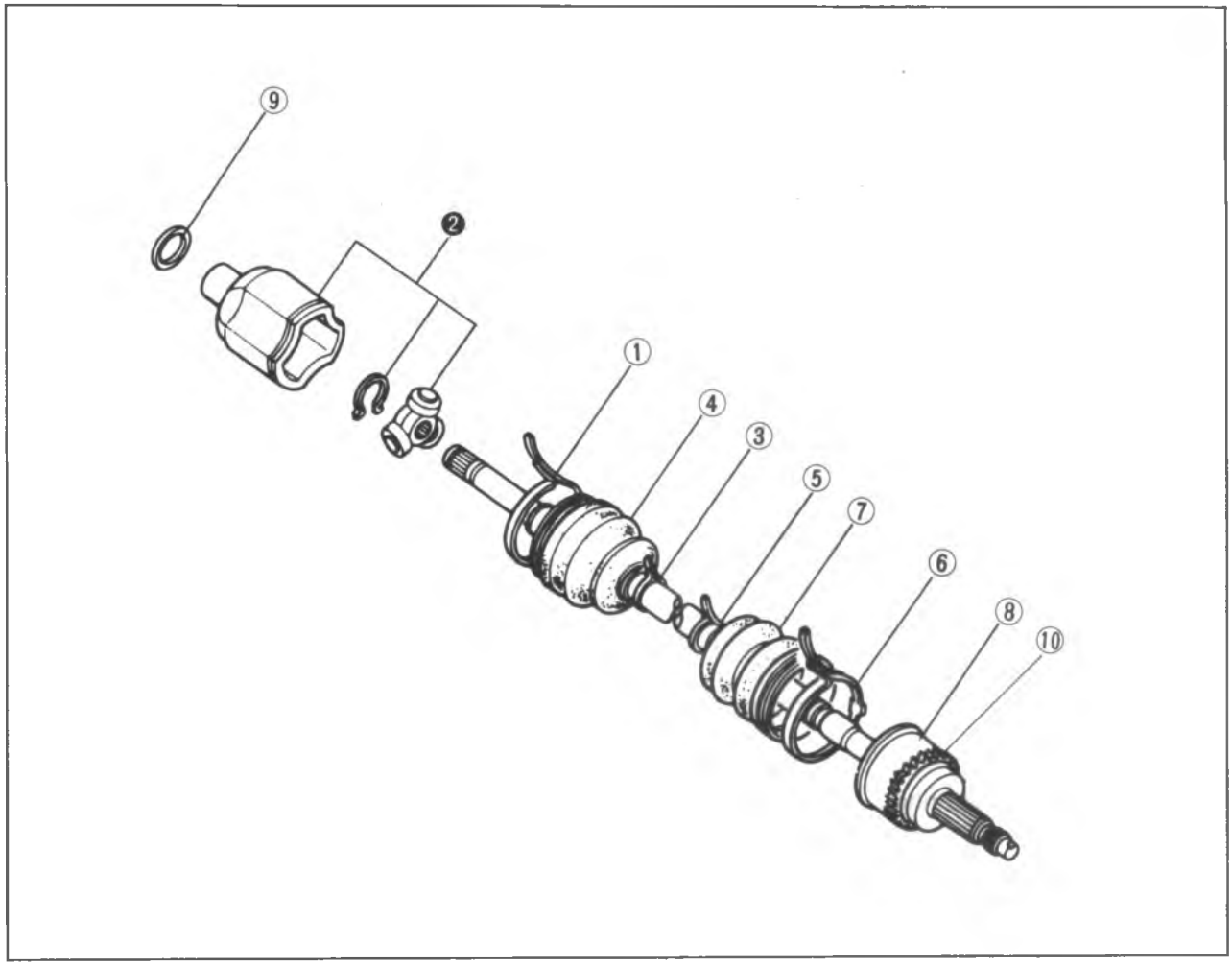

86U09X-064

1. Boot band
2. Tripod joint assembly
3. Boot band
4. Boot
5. Boot band
6. Boot band
7. Boot
8. Shaft and ball-joint assembly
9. Clip
10. Sensor rotor (Refer to Section 11)

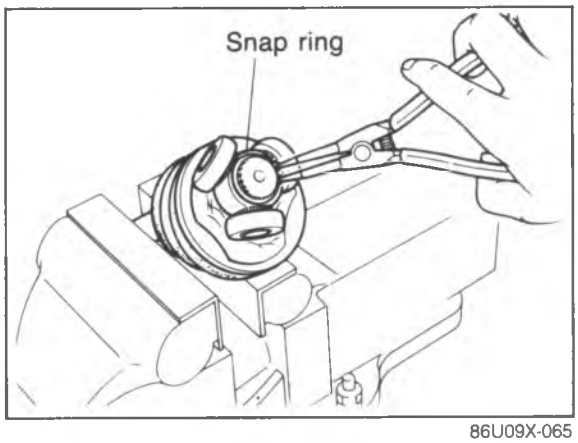

86U09X-065

Disassembly Note
Tripod joint assembly
1. Remove the snap ring using snap ring pliers, then remove the tripod joint bearing.
2. Disassemble the joint shaft assembly.

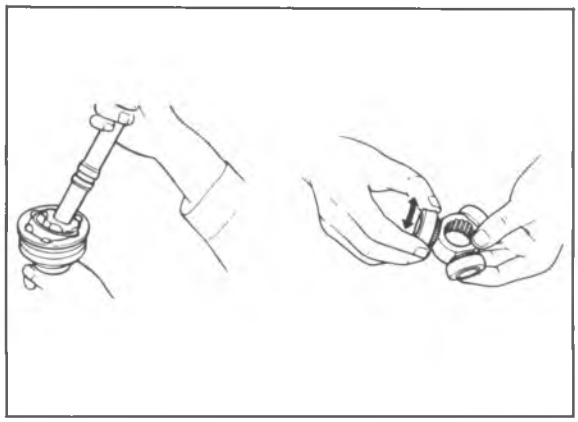

86U09X-066

INSPECTION

Check and replace any faulty parts.

1. Twisted, bent, or damaged shaft.
2. Wear or scoring of splines.
3. Wear, excessive looseness, seizure, rust, or damage of bearing.
4. Checking, damage, or deterioration of boots.
5. Excessive play or heat damage of joint shaft bearing.

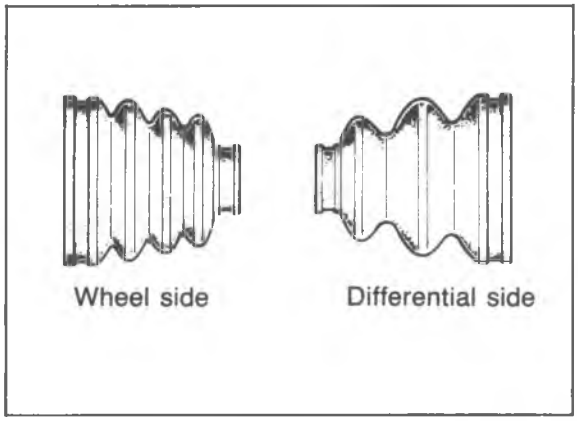

86U09X-067

ASSEMBLY

Assemble in the reverse order of disassembly, referring to assembly note.

Assembly Note

Note

a) The wheel side and differential side boots are different as shown in the figure.
b) Fill the inside of the ball joint with the specified grease included in the kit.
c) Securely fit the boot to the shaft and the outer race boot grooves.

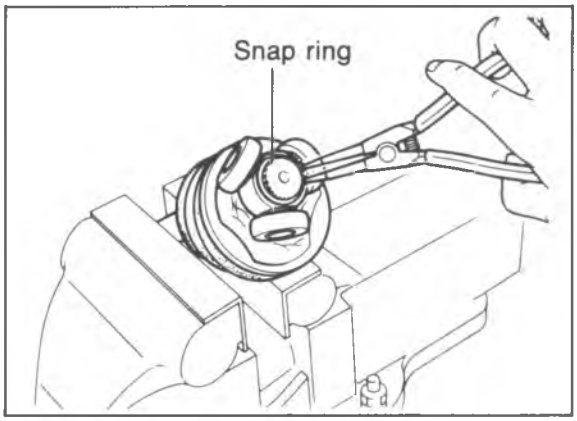

86U09X-068

Tripod joint

Install the snap ring to the joint.

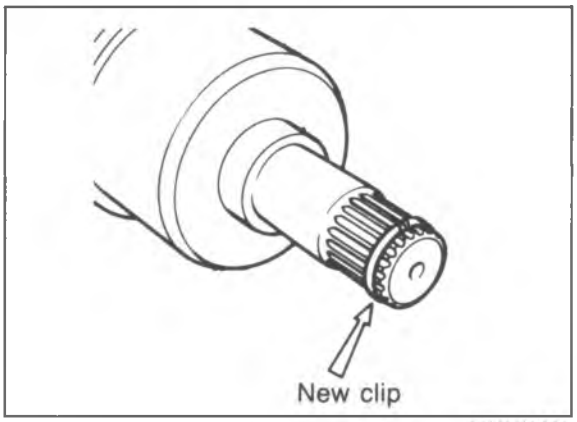

86U09X-069

Clip

Install a new clip.

INSTALLATION

Install in the reverse order of removal referring to the installation note.

Torque specifications

86U09X-070

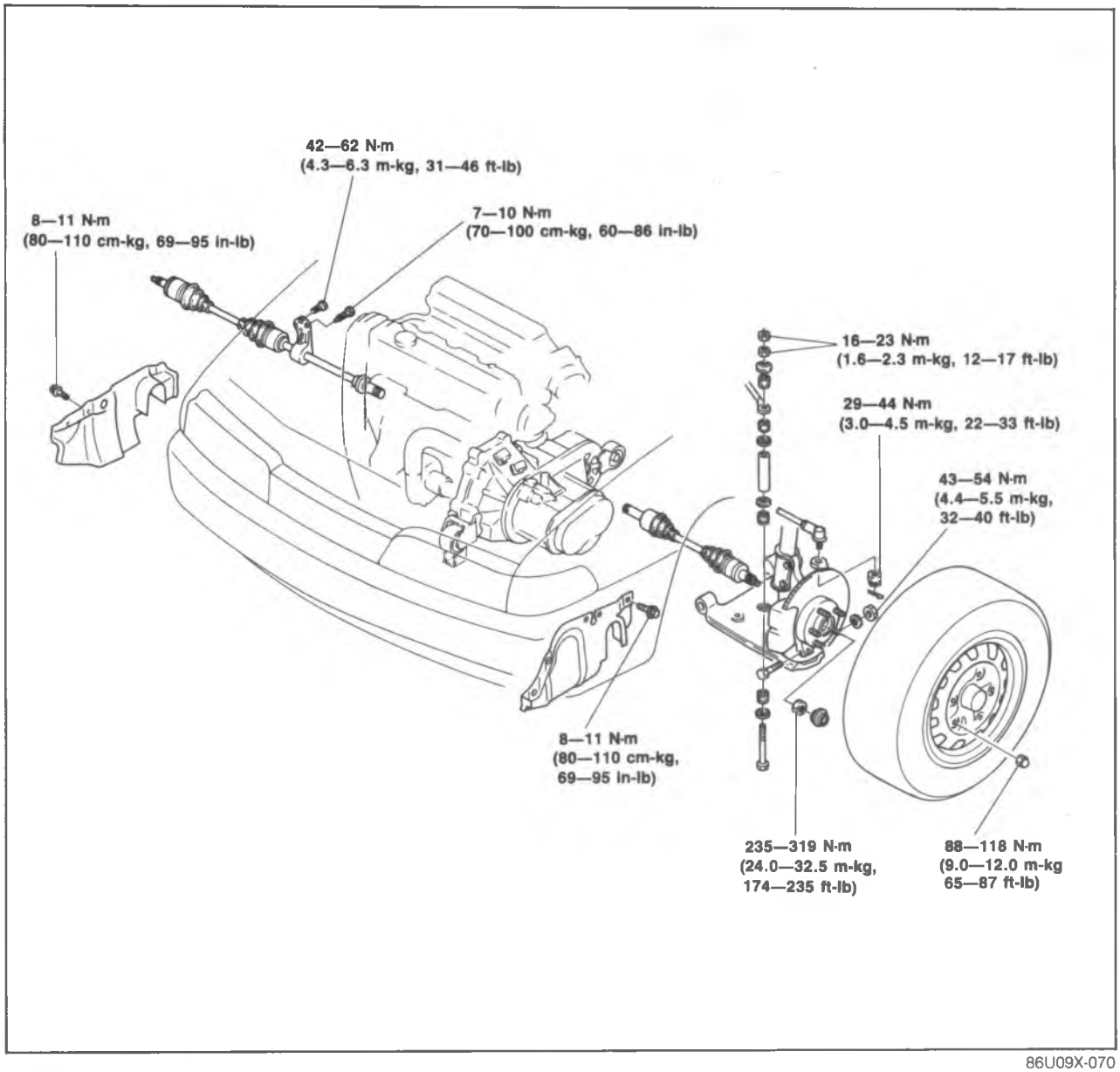

86U09X-071

Installation Note

Clip

Install a new clip.

Note

a) Before installing the shaft, check the transaxle oil seal for damage.

b) Apply transaxle oil to the oil seal lip.

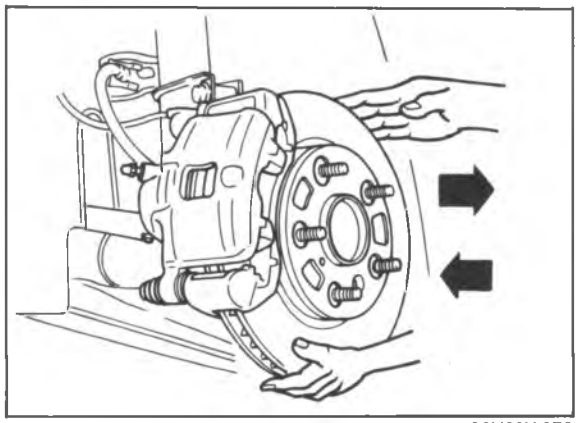

86U09X-072

Front wheel hub
After installation, pull the front wheel hub outward and check that the driveshaft does not come out.

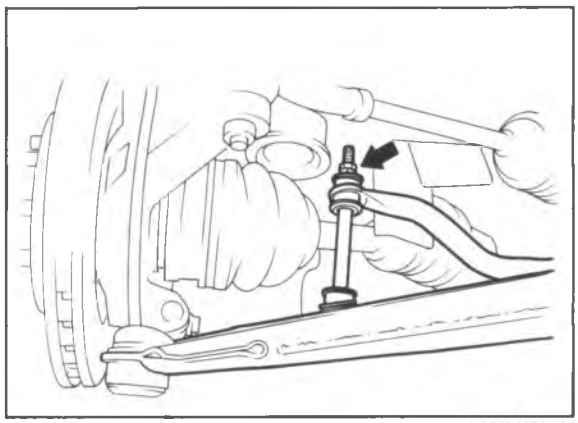

86U09X-073

Stabilizer
Lock the nut with **20.1 mm (0.79 in)** of the threads exposed.

Tightening torque: 16—23 N·m (1.6—2.3 m-kg, 12—17 ft-lb)

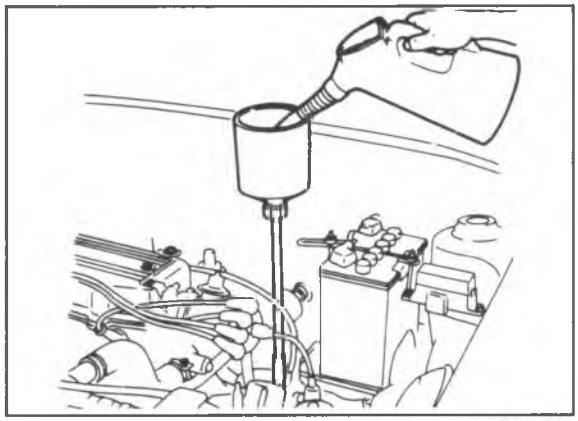

86U09X-074

Oil
Add the specified grade and quantity of transaxle oil. (Refer to Section 7)

JOINT SHAFT

Disassembly and Assembly

Disassemble in the sequence shown in the figure.
Assembly in the reverse order of disassembly referring to the notes for the specially marked parts.

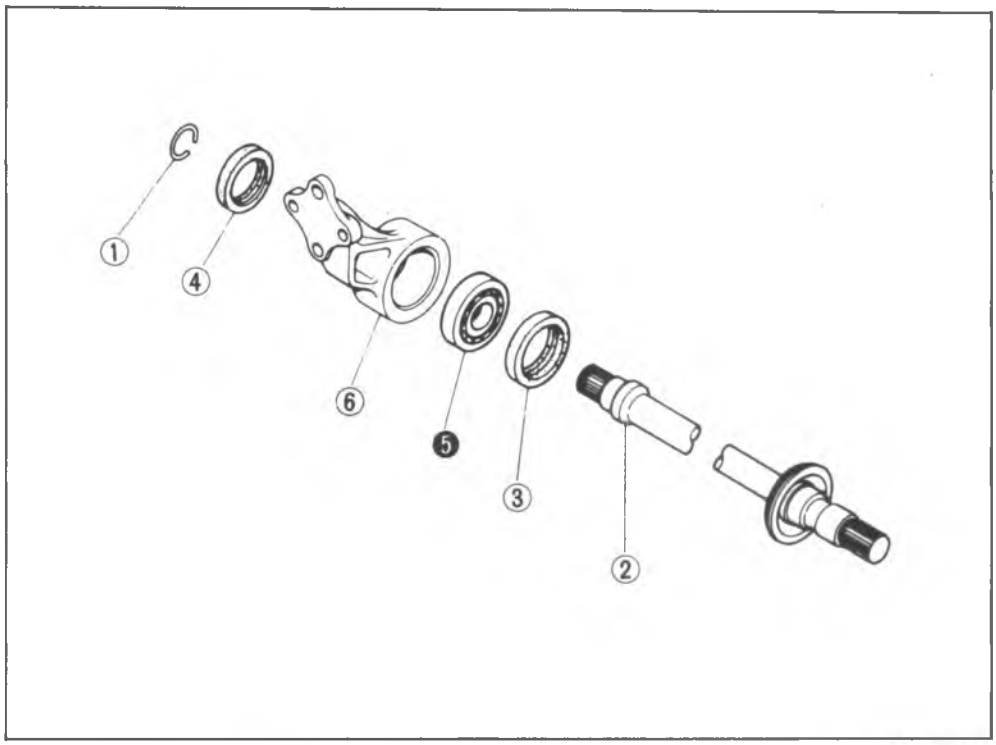

86U09X-075

1. Clip
2. Joint shaft
3. Oil seal
4. Oil seal
5. Bearing
6. Bracket

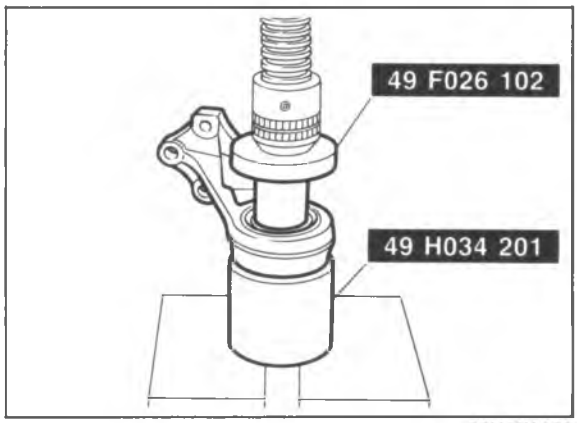

86U09X-076

Disassembly Note
Bearing
Remove the shaft and bearing with the **SST** and press.

Caution
Hold the shaft and the bearing by hand does not drop.

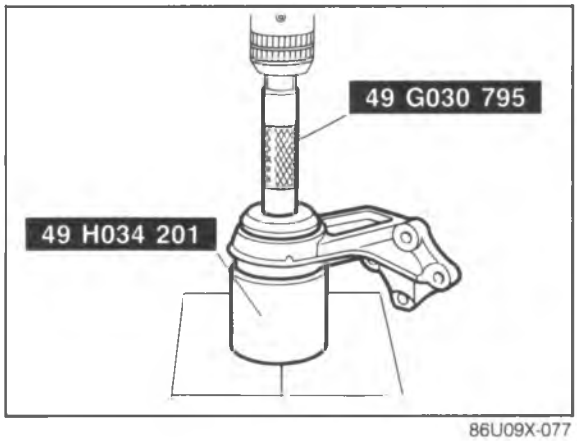

86U09X-077

Assembly Note
Bearing
1. Install the shaft and a new bearing with the **SST** and press.
2. Install new oil seals.
3. Install a new clip.

STEERING SYSTEM

OUTLINE ..... 10— 2
STRUCTURAL VIEW ..... 10— 2
SPECIFICATIONS ..... 10— 6
TROUBLESHOOTING GUIDE ..... 10— 7
MANUAL STEERING ..... 10— 7
POWER STEERING ..... 10— 8
4WS ..... 10— 9
ON-VEHICLE MAINTENANCE ..... 10— 10
STEERING WHEEL PLAY ..... 10— 10
LOOSENESS OR PLAY OF THE STEERING WHEEL ..... 10— 10
STEERING WHEEL EFFORT ..... 10— 10
POWER STEERING FLUID LEVEL 10— 11
LOOSE OR DAMAGED OIL PUMP BELT ..... 10— 12
REAR STEERING GEAR OIL ..... 10— 12
LEAKAGE OF POWER STEERING FLUID ..... 10— 13
INSPECTION AND ADJUSTMENT . 10— 15
BLEEDING OF POWER STEERING SYSTEM ..... 10— 15
POWER STEERING PRESSURE ... 10— 16
TIE-ROD END BOOTS ..... 10— 18
REMOVAL AND INSTALLATION .. 10— 18
STEERING WHEEL AND COLUMN 10— 21
STRUCTURAL VIEW ..... 10— 21
REMOVAL ..... 10— 22
DISASSEMBLY AND ASSEMBLY .. 10— 24
INSPECTION ..... 10— 25
INSTALLATION ..... 10— 27
STEERING GEAR AND LINKAGE .. 10— 28
STRUCTURAL VIEW ..... 10— 28
REMOVAL ..... 10— 29
INSTALLATION ..... 10— 30
4-WHEEL STEERING GEAR AND LINKAGE ..... 10— 31
STRUCTURAL VIEW ..... 10— 31
4WS PERFORMANCE INSPECTION 10— 32
ADJUSTMENT OF STEERING ANGLE TRASFER SHAFT ..... 10— 35
REMOVAL AND INSTALLATION .. 10— 37
INSPECTION ..... 10— 44
MANUAL STEERING ..... 10— 48
DISASSEMBLY ..... 10— 48
INSPECTION ..... 10— 51
ASSEMBLY ..... 10— 52
ENGINE SPEED SENSING POWER STEERING ..... 10— 58
DISASSEMBLY ..... 10— 58
INSPECTION ..... 10— 62
ASSEMBLY ..... 10— 64
ELECTRONICALLY-CONTROLLED POWER STEERING ..... 10— 75
DISASSEMBLY ..... 10— 75
INSPECTION ..... 10— 78
ASSEMBLY ..... 10— 79
OIL PUMP ..... 10— 83
REMOVAL AND INSTALLATION .. 10— 83
ELECTRICAL COMPONENTS OF ELECTRONICALLY-CONTROLLED POWER STEERING ..... 10— 85
CIRCUIT DIAGRAM ..... 10— 85
TROUBLESHOOTING GUIDE ..... 10— 85
TROUBLESHOOTING ..... 10— 85
ELECTRICAL COMPONENTS OF 4 WHEEL STEERING ..... 10— 92
CIRCUIT DIAGRAM ..... 10— 92
TROUBLESHOOTING GUIDE ..... 10— 93
TROUBLESHOOTING ..... 10— 93
4WS WARNING LIGHT ..... 10—100
SPEED SENSOR (IN METER) ..... 10—101
SPEED SENSOR (AT TRANSAXLE) 10—101
REAR-TO-FRONT STEERING RATIO SENSOR ..... 10—101
OIL LEVEL SWITCH (IN P/S RESERVOIR) ..... 10—101
RELAY AND TIMER ..... 10—102

86U10X-001

OUTLINE

STRUCTURAL VIEW

Manual Steering

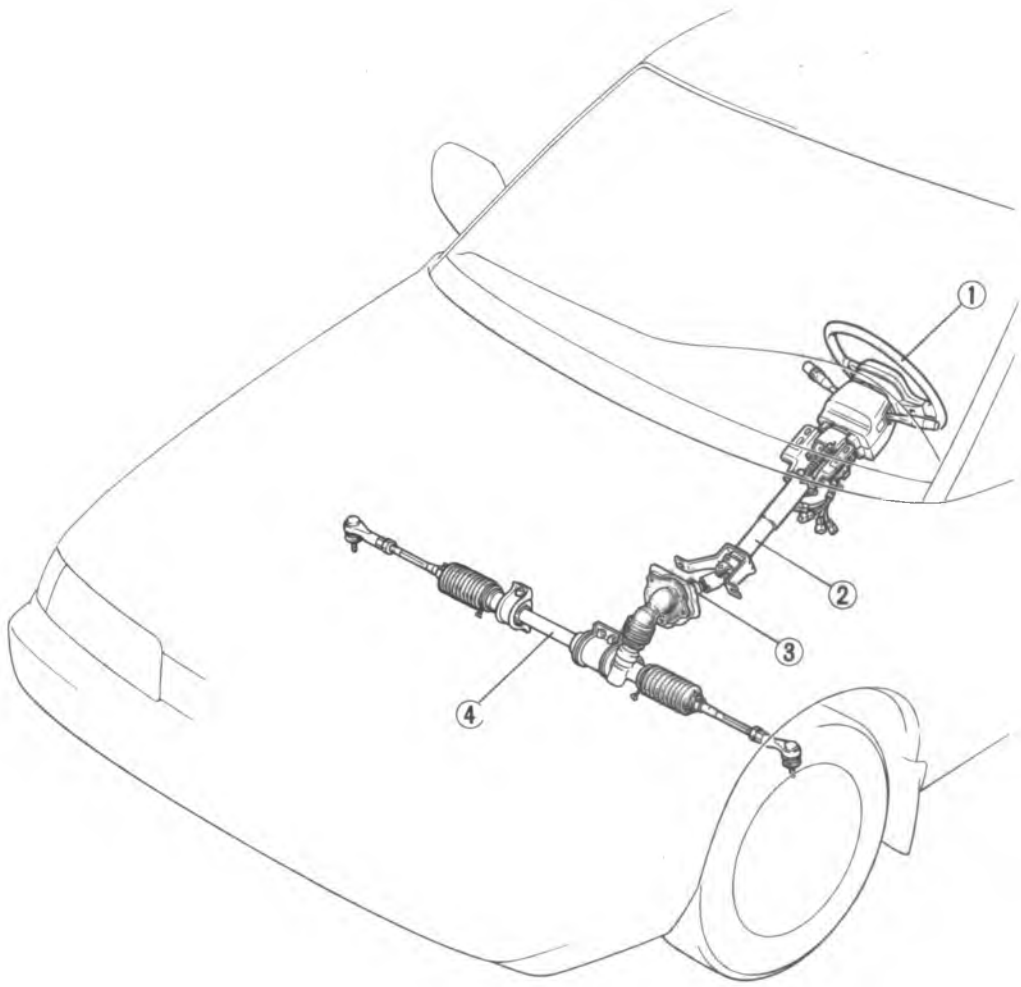

86U10X-002

1. Steering wheel
2. Steering shaft
3. Intermediate shaft
4. Steering gear assembly

Power Steering (ESPS)

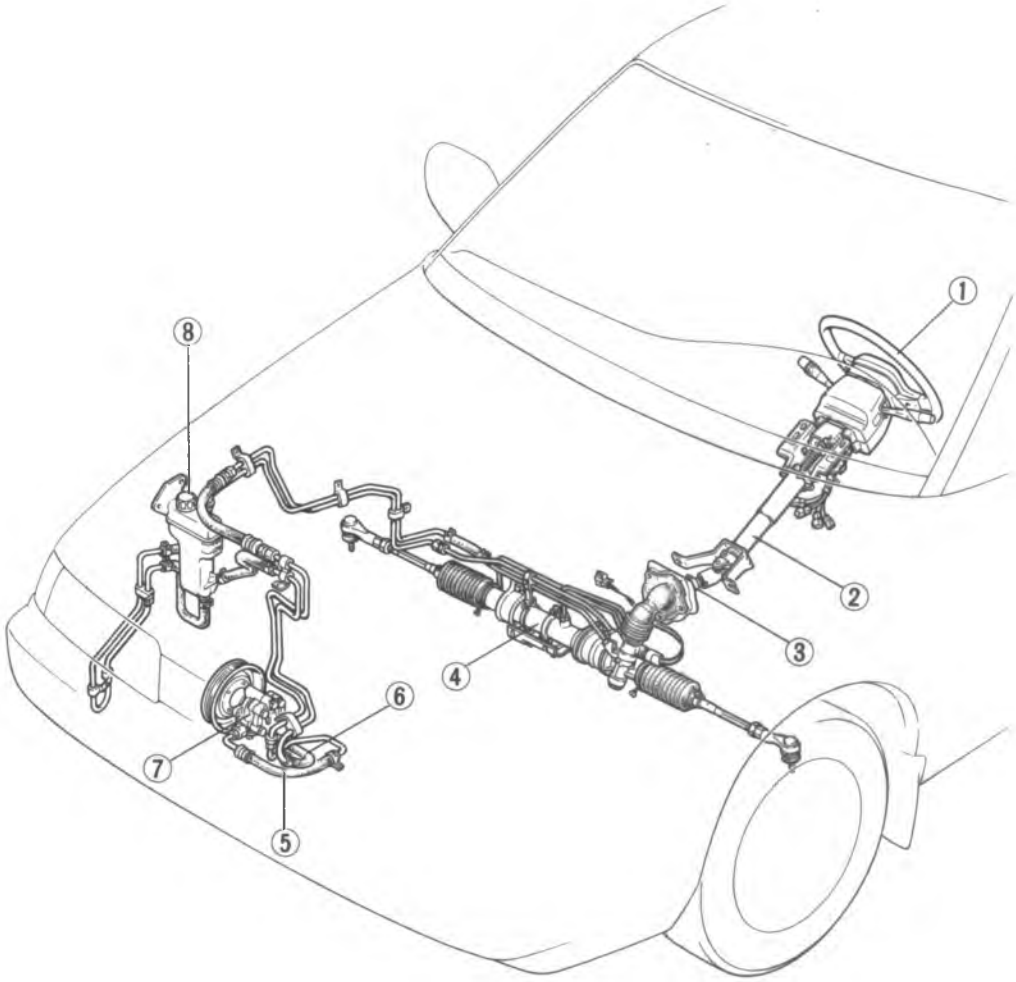

86U10X-003

1. Steering wheel
2. Steering shaft
3. Intermediate shaft
4. Steering gear assembly
5. Pressure hose
6. Return hose
7. Oil pump
8. Reserve tank

Note
Engine speed sensing power steering is abbreviated ESPS.

Power Steering (ECPS)

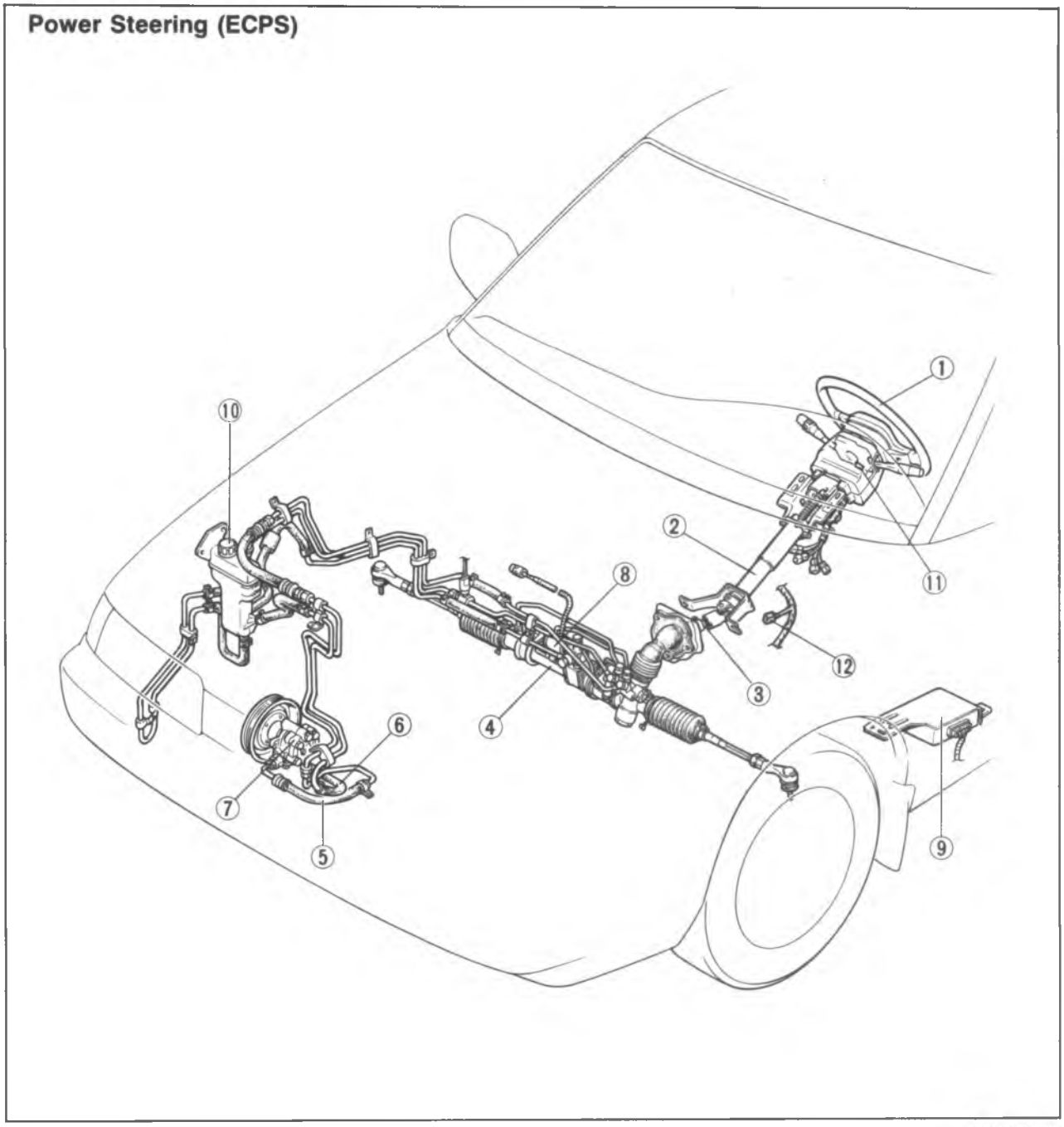

86U10X-004

1. Steering wheel
2. Steering shaft
3. Intermediate shaft
4. Steering gear assembly
5. Pressure hose
6. Return hose
7. Oil pump
8. Solenoid valve
9. Control unit
10. Reserve tank
11. Steering angle sensor
12. Check connector

Note
Electronically - controlled power steering is abbreviated ECPS.

Power Steering (4WS)

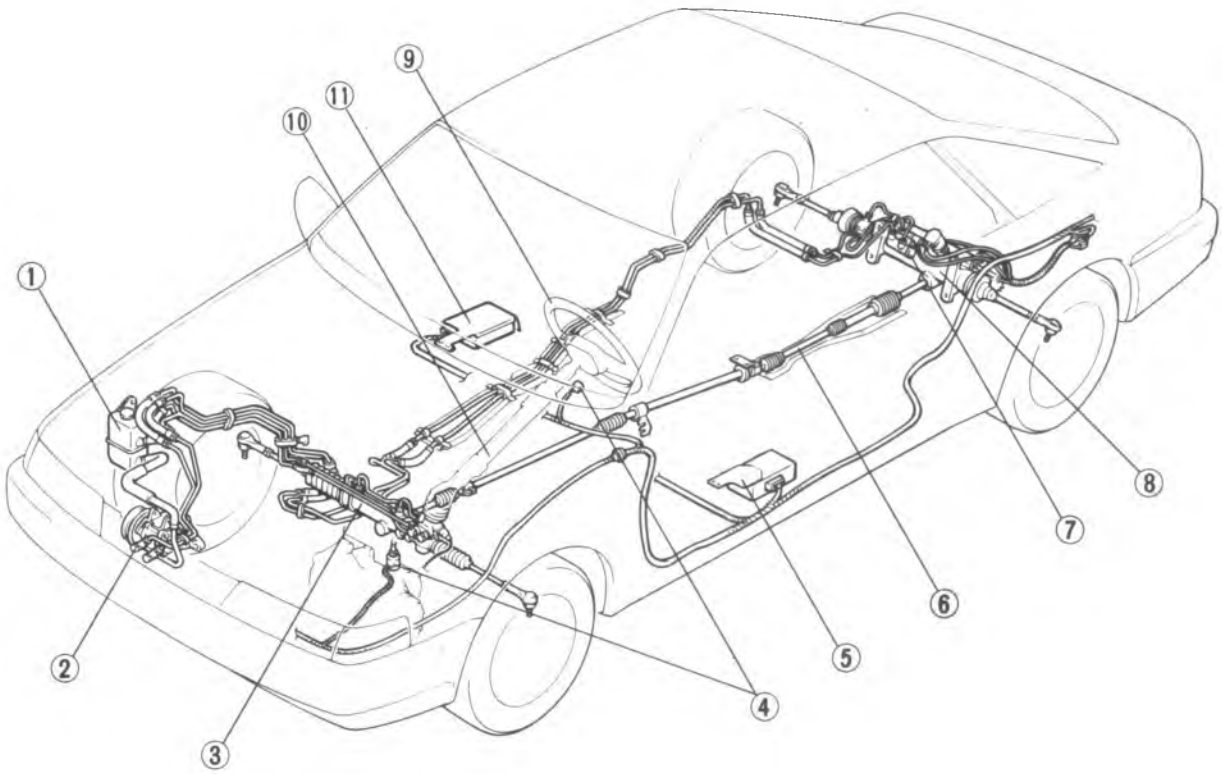

86U10X-005

1. Reserve tank
2. Oil pump
3. Front steering gear assembly
4. Speed sensor
5. Control unit
6. Steering angle transfer shaft
7. Solenoid valves
8. Rear steering gear assembly
9. Steering wheel
10. Steering shaft
11. Relay and timer

Note
4-wheel steering is abbreviated 4WS.

SPECIFICATIONS

Item \ Type			Manual steering	Power steering
Steering wheel	Outer diameter mm (in)		380 (15.0)	
	Turns lock to lock		4.32	2.93
Steering shaft and joints	Shaft type		Collapsible	
	Joint type		Cross joints (2)	
	Tilt stroke mm (in)		40 (1.6)	
Front steering gear	Type		Rack and pinion	
	Gear ratio		∞ (infinite)	
Power steering fluid	Capacity liter (US qt, Imp)	2WS	—	0.9 (0.95, 0.79)
		4WS	—	1.0 (1.06, 0.88)
	Type	2WS 4WS	—	Dexron II or M III

86U10X-006

Note
2-Wheel steering is abbreviated 2WS.

TROUBLESHOOTING GUIDE

MANUAL STEERING

Problem	Probable Cause	Remedy	Page
Steering "heavy" (vehicle jacked up, both wheels off ground)	Poor lubrication, foreign material, or abnormal wear of steering ball-joints	Refer to Section 13	—
	Stuck or damaged ball-joints	Replace	10—18
	Improperly adjusted steering pinion preload	Adjust	10—56
	Damaged steering gear	Replace	10—28
	Worn or damaged steering bushing	Replace	10—53
	Stuck lower-arm ball-joint	Refer to Section 13	—
	Malfunction of steering-shaft joint	Replace	10—21
Steering wheel pulls to one side	Incorrect tire pressure	Refer to Section 12	—
	Unevenly worn tires	Refer to Section 12	—
	Weakened front spring	Refer to Section 13	—
	Worn or damaged stabilizer and/or lower arm bushing	Refer to Section 13	—
	Dragging brake	Refer to Section 11	—
	Loose lower arm	Refer to Section 13	—
	Improperly adjusted wheel alignment	Refer to Section 13	—
General instability while driving	Incorrect tire pressure	Refer to Section 12	—
	Damaged or unbalanced wheel	Refer to Section 13	—
	Worn or damaged steering joints	Replace	10—21
	Improperly adjusted steering pinion preload	Adjust	10—56
	Weakened front spring	Refer to Section 13	—
	Worn or damaged stabilizer and/or lower arm bushing	Refer to Section 13	—
	Malfunctioning shock absorber	Refer to Section 13	—
	Improperly adjusted wheel alignment	Refer to Secton 13	—
Steering wheel vibrates	Incorrect tire pressure	Refer to Section 12	—
	Unevenly worn tires	Refer to Section 12	—
	Worn wheel bearing, or incorrect adjustment	Refer to Section 13	—
	Worn or damaged steering joints	Replace	10—21
	Improperly adjusted steering pinion preload	Adjust	10—56
	Loose gear housing mounting bolts	Tighten	10—30
	Worn steering gear bearing	Replace	—
	Worn or damaged stabilizer and/or lower arm bushing	Refer to Section 13	—
	Improperly adjusted wheel alignment	Refer to Section 13	—
	Worn lower-arm ball-joint	Refer to Section 13	—
	Damaged unbalanced wheel	Refer to Section 13	—
	Malfunctioning or loose shock absorber	Refer to Section 13	—
Excessive steering wheel play	Improperly adjusted steering gear backlash	Adjust	10—56
	Worn rack and pinion gear	Replace	10—51
	Worn or damaged steering joints	Replace	10—21
	Worn or damaged lower-arm bushing	Refer to Section 13	—
Poor steering wheel return	Incorrect tire pressure	Refer to Section 12	—
	Stuck or damaged steering joints	Replace	10—21
	Improperly adjusted front wheel alignment	Refer to Section 13	—
	Improperly adjusted steering pinion preload	Adjust	10—56
Abnormal noise from steering system	Loose steering linkage	Tighten	10—28
	Worn steering joints	Replace	10—21
	Improperly adjusted steering gear backlash	Adjust	10—56

86U10X-007

POWER STEERING

Problem	Possible cause	Remedy	Page
Hard steering	Loose or damaged belt	Adjust or replace	10—12
	Low fluid level, or air in fluid	Add fluid or bleed air	10—11
	Leakage of fluid	Repair or replace	10—13
	Malfunctioning electrical system*	Repair or replace	10—85
	Insufficient oil pump pressure	Repair or replace	10—16
	Improperly adjusted wheel alignment	Refer to Section 13	—
	Malfunctioning steering gear	Repair or replace	10—28, 37
	Linkage ball joint not operating smoothly	Replace	10—18
Poor return	Insufficient tire pressure	Refer to Section 12	—
	Improperly adjusted wheel alignment	Refer to Section 13	—
	Ball-joint not operating smoothly	Replace	10—20
	Steering shaft contacting something	Repair	10—21
Excessive play	Loose gear box housing mounting bolts	Tighten	10—30
	Worn linkage or tie-rod ball joint	Replace	10—18
	Worn lower ball joint	Refer to Section 13	—
	Worn or damaged steering joint	Replace	10—21
	Worn rack and pinion gear	Replace	10—58, 75
Steering wheel vibrates	Insufficient tire pressure	Refer to Section 12	—
	Damaged or unbalanced wheel	Refer to Section 13	—
	Improperly adjusted wheel alignment	Refer to Section 13	—
	Loose gear box housing mounting bolts	Tighten	10—30
	Incorrect pinion preload adjustment	Adjust	10—72, 81
	Worn ball joints	Replace	10—18
	Loose shock absorber mounting	Refer to Section 13	—
	Malfunctioning shock absorber	Refer to Section 13	—
Steering wheel pulls	Unevenly worn tires	Refer to Section 12	—
	Incorrect tire pressure	Refer to Section 12	—
	Dragging brake	Refer to Section 11	—
	Improperly adjusted wheel alignment	Refer to Section 13	—
Excessively light steering at high speed*	Malfunctioning electrical system	Repair or replace	10—85

*... Only for electronically - controlled type

86U10X-008

4WS
Rear Steering Gear

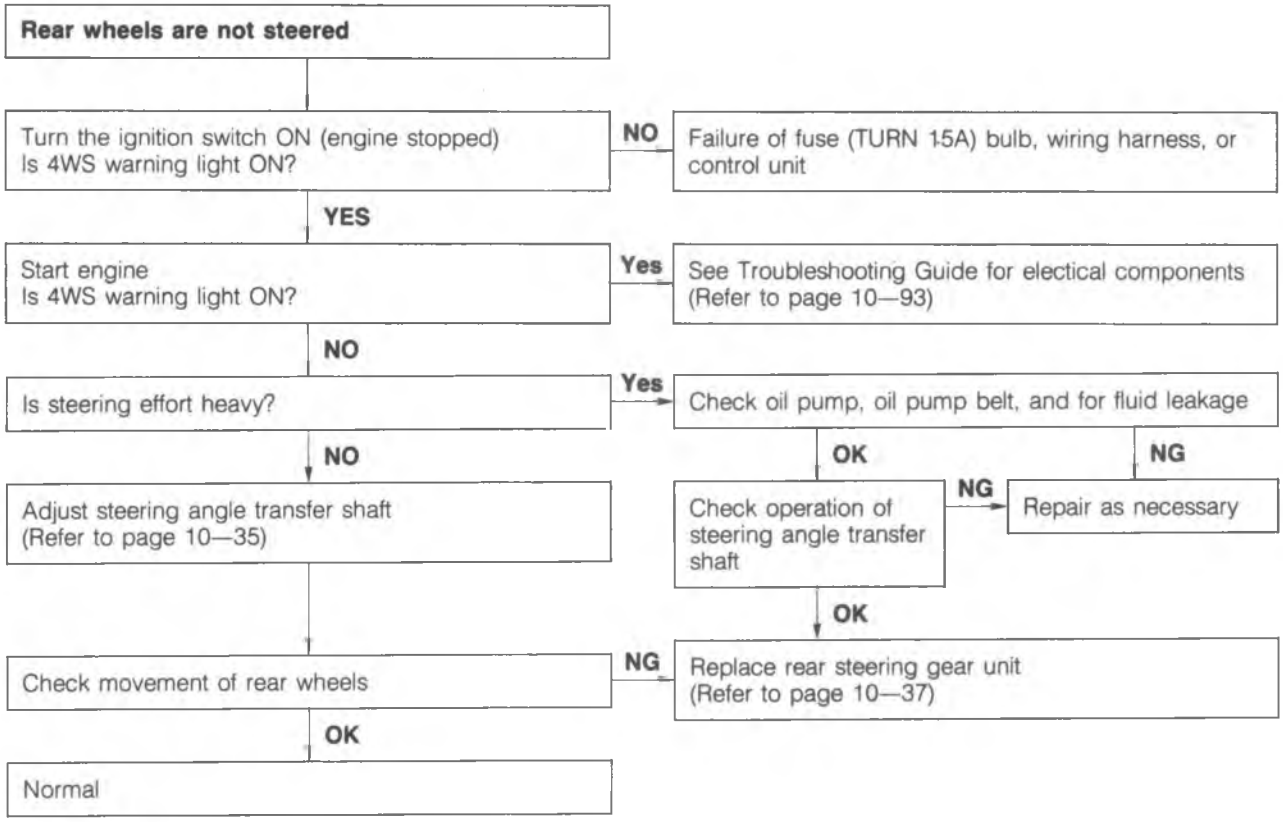

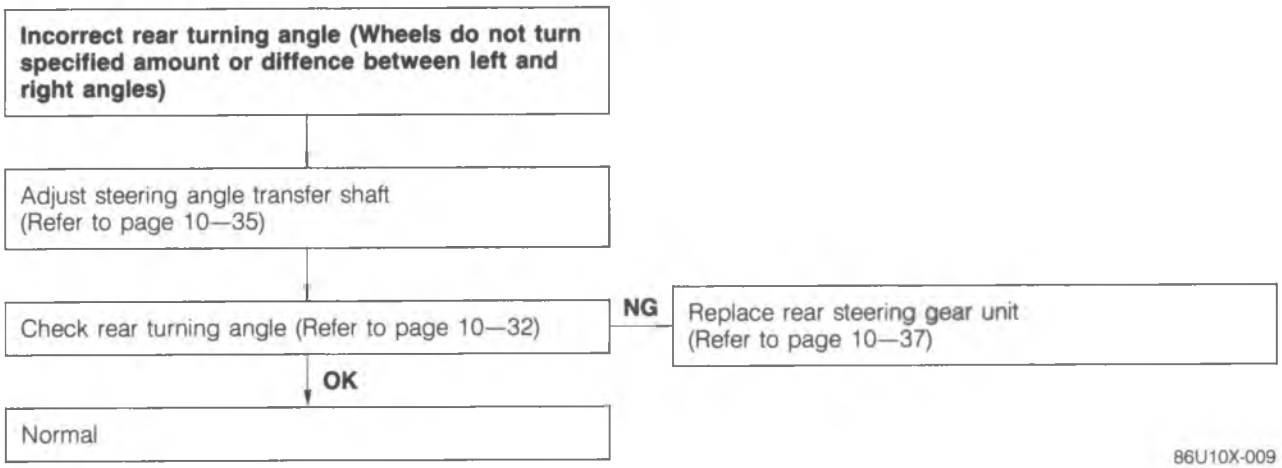

86U10X-009

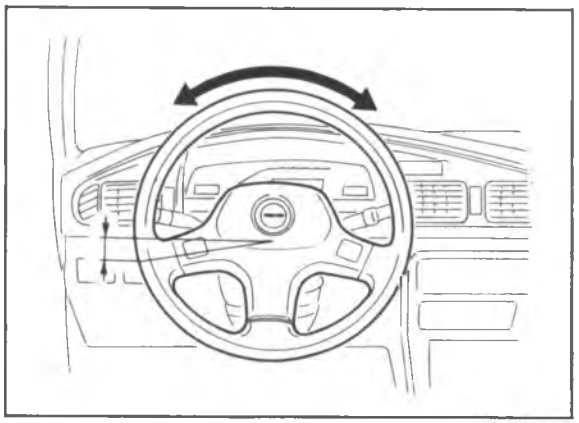

86U10X-010

ON-VEHICLE MAINTENANCE

STEERING WHEEL PLAY

With the wheels in the straight-ahead position, gently turn the steering wheel to the left and right and check that the play is within specification.

Play: 0—30 mm (0—1.18 in)

Note
If play exceeds specification, either the steering joints are worn or backlash of the steering gear is excessive.

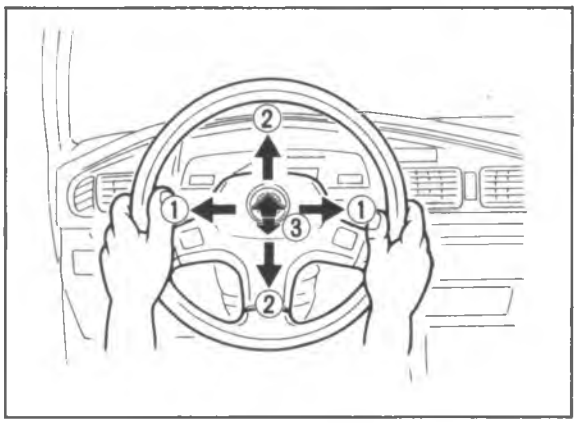

86U10X-011

LOOSENESS OR PLAY OF STEERING WHEEL

Move the steering wheel in the directions ①, ②, and ③ to check for column bearing wear, steering-shaft joint play, steering wheel looseness, and column looseness.

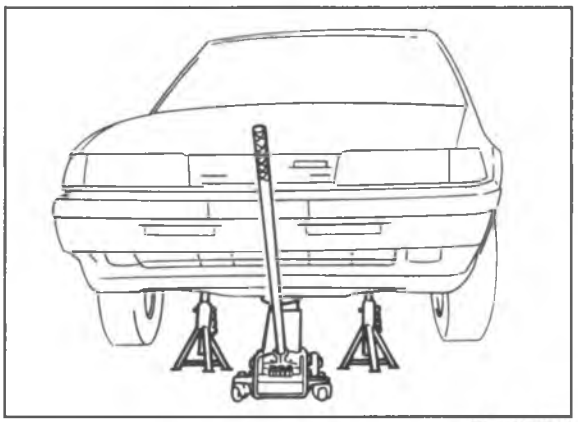

86U10X-012

STEERING WHEEL EFFORT

Manual Steering

1. Jack up the vehicle. Move the steering wheel to put the wheels in the straight-ahead position.
2. Measure the steering wheel effort by connecting a pull scale to the outer circumference of the steering wheel.

   Steering wheel effort:
   5—25 N (0.5—2.5 kg, 1—5.5 lb)
   [during one turn of the steering wheel]

   Note
   Measure after turning the steering wheel to the left and right at least 5 times.

3. If the measured value exceeds specification, check the following: rotation-starting torque of pinion, rotation torque of each ball-joint, and joints.

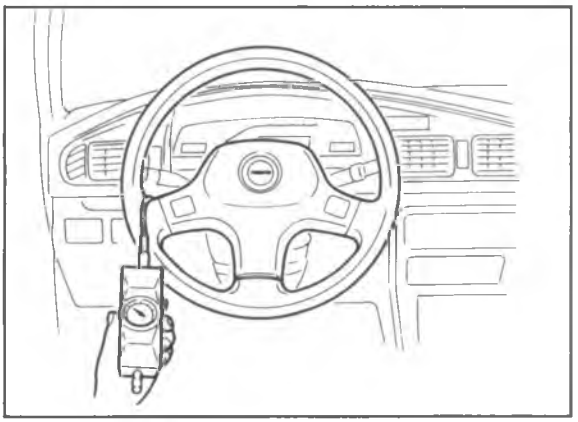

86U10X-013

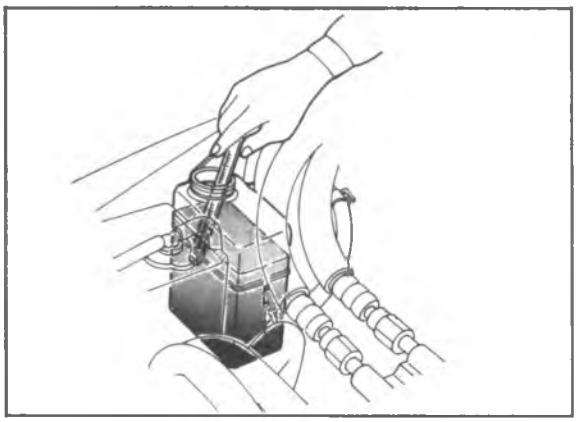

86U10X-014

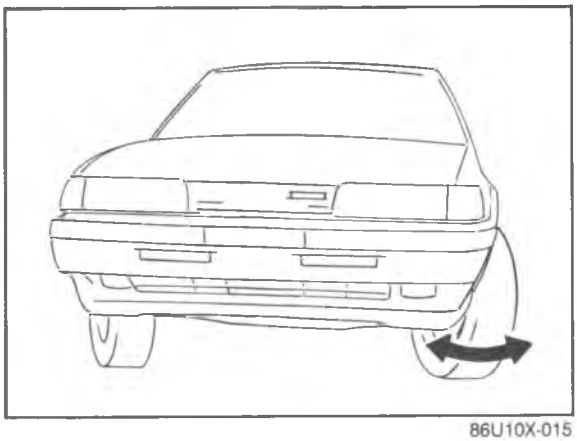

86U10X-015

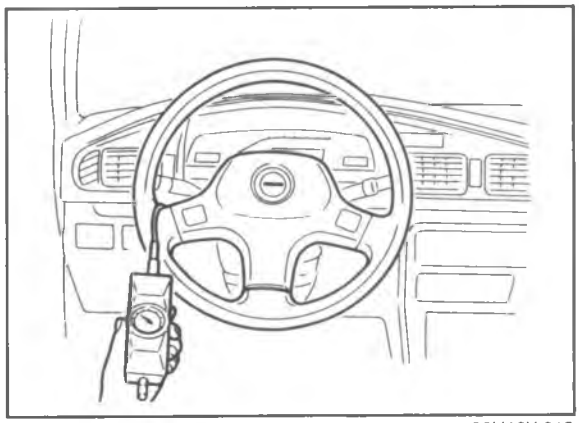

86U10X-016

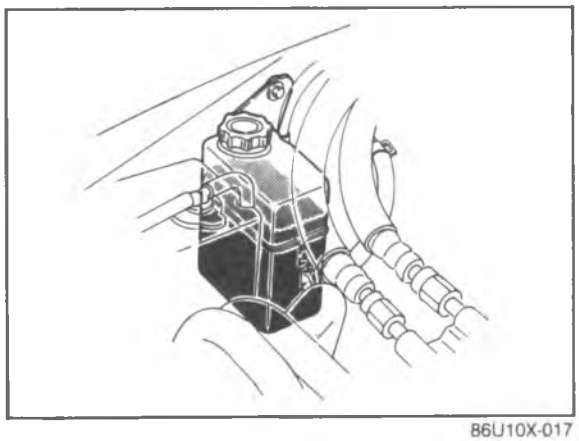

86U10X-017

Power Steering

1. With the vehicle on a hard level surface, move the steering wheel to put the wheels in the straight ahead position.
2. Start the engine and warm the power steering fluid to **50—60°C (122—140°F)**.
3. Attach a pull scale to the outer circumference of the steering wheel. Then, starting with the wheels in the straight-ahead position, check the steering effort required to turn the steering wheel to the left and to the right.
4. If the measured value exceeds specification, check the following: fluid level, air in system, fluid leakage at hose or connections, function of oil pump and gear box, and tire pressure.

Steering wheel effort:
ESPS Type
25—31N (2.6—3.2 kg, 6—7 lb)
ECPS Type
15—23 N (1.7—2.3 kg, 3—5 lb)
4WS Type
25—35N (2.5—3.5 kg, 6—8 lb)
[during one turn of the steering wheel]

Note (4WS)

1) **If not within specification, separate the transfer shaft from the front steering gear and check again.**
2) **If still not within specification, there is a malfunction of the front steering gear.**
3) **If the measured value is now within specification, check the transfer shaft and rear steering gear (Refer to Page 10—45.)**

POWER STEERING FLUID LEVEL

Check the power steering fluid level, and add fluid to the specified level if necessary.

Caution
Use only the specified power steering fluid.

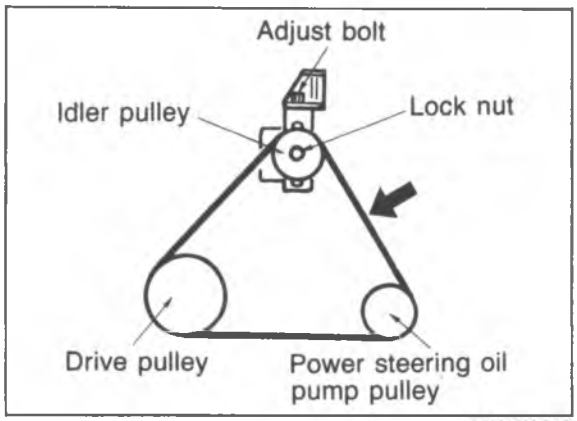

86U10X-018

LOOSE OR DAMAGED OIL PUMP BELT

Check the oil pump belt for looseness or damage. Adjust or replace if necessary.

To check the oil pump belt tension, apply moderate pressure **(98 N, 10 kg, 22 lb)** midway between the pulleys. Check the deflection, and adjust if necessary.

1. Loosen the locknut on the idler pulley.
2. Turn the adjust bolt on the idler pulley until the correct tension is obtained.
3. Tighten locknut and recheck the tension.

Tightening torque:
49—59 N (5—6 m-kg, 36—43 ft-lb)

Drive belt	Deflection	
	New	Used
Power steering oil pump drive belt	8—10 mm (0.31—0.39 in)	9—11 mm (0.35—0.43 in)

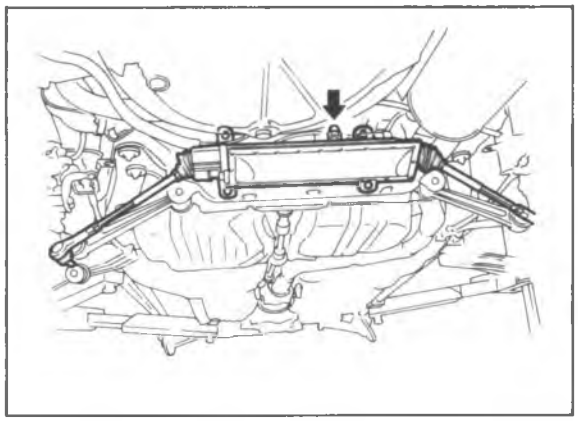

86U10X-019

REAR STEERING GEAR OIL

Fluid Level (4WS)

Remove the bleeder valve, and check the fluid level with a wire.

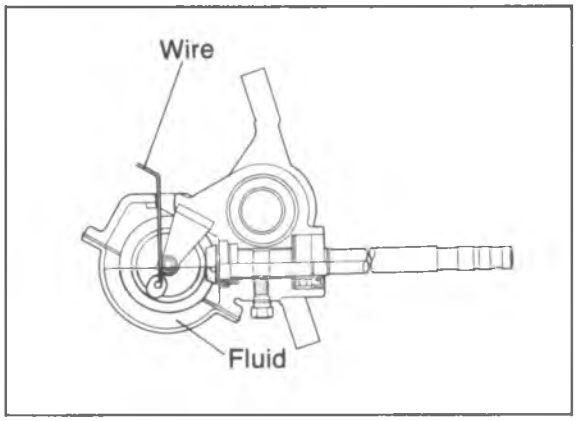

86U10X-250

Caution
Be careful not to let dirt in.

Fluid level
44 ± 3 mm (1.7 ± 0.1 in)
0.9 ± 0.1 liters (1.0 ± 0.1 US qt, 0.8 ± 0.1 Imp qt)

LEAKAGE OF POWER STEERING FLUID

Check the following points for fluid leakage:

1. Gear
2. Oil pump
3. All fluid pipes and connections
4. Solenoid valve (ECPS Type, 4WS Type)

Note

a) Start the engine, and check for fluid leakage after turning the steering wheel completely to the left and right to apply fluid pressure. Do not, however, keep the steering wheel in the fully turned position for more than 15 seconds.

b) The points where fluid leakage may occur are indicated by the arrows in the figure.

Power Steering (2WS)

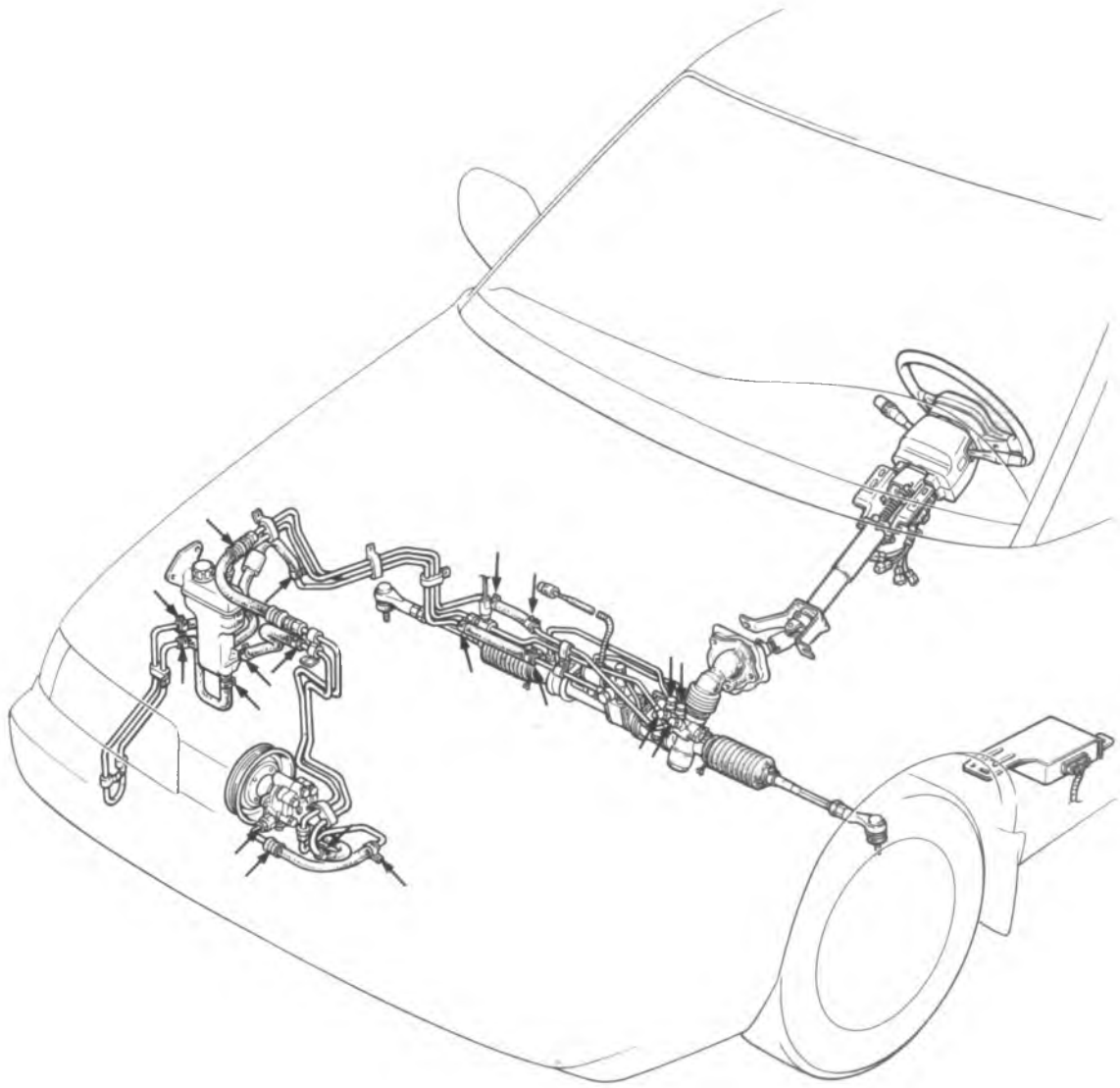

86U10X-020

Power Steering (4WS)

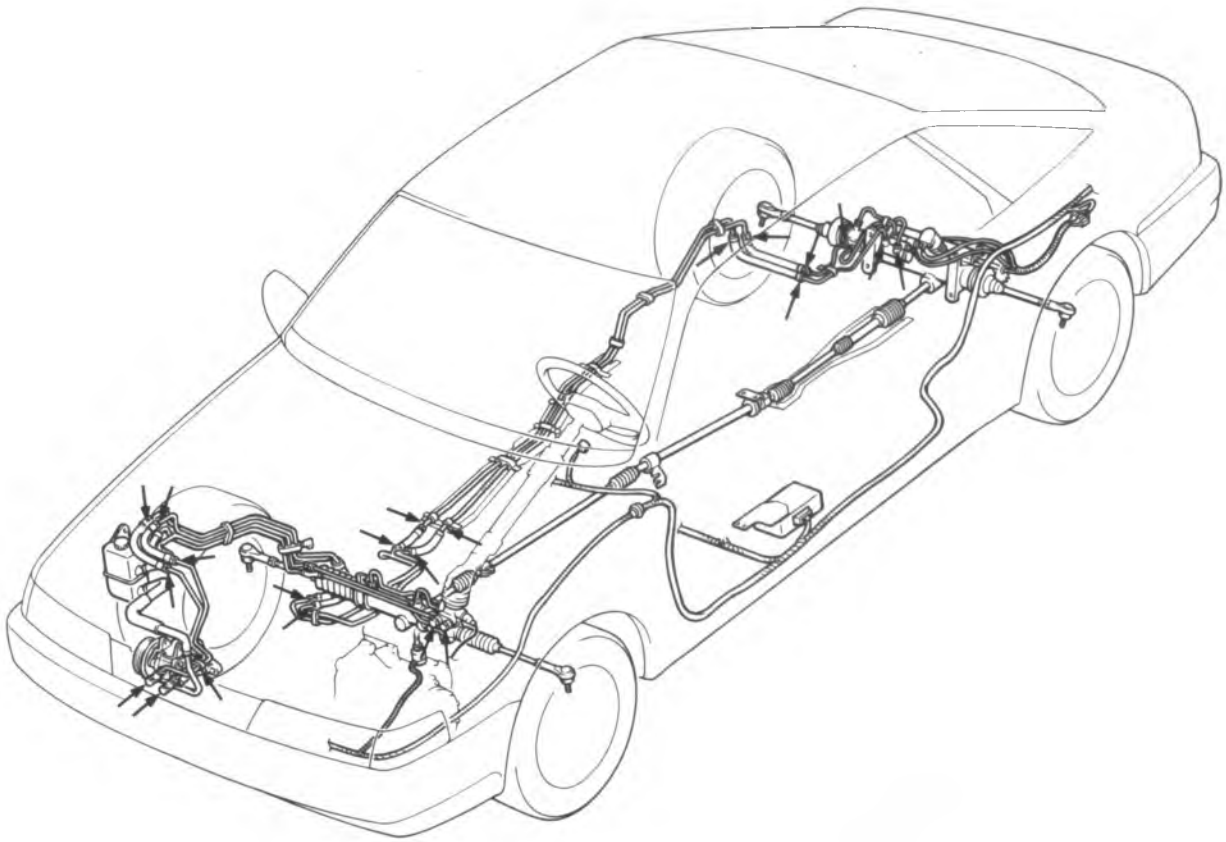

86U10X-235

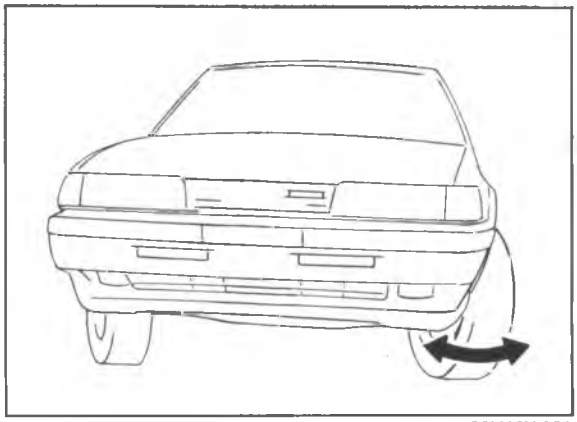

86U10X-021

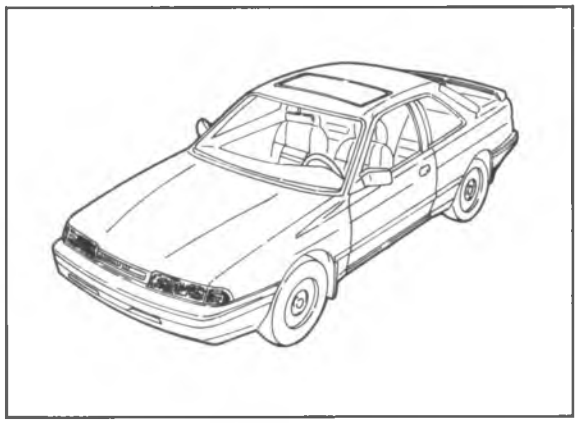

86U10X-022

INSPECTION AND ADJUSTMENT

BLEEDING OF POWER STEERING SYSTEM

1. Check the fluid level, and add fluid if necessary.
2. Turn the steering wheel fully in both directions 5 times (engine not running).
3. Recheck the fluid level. If the level has lowered, add fluid, and repeat from step 1.
4. Start the engine, and run it at idle.
5. Turn the steering wheel fully in both directions 5 times to bleed air from the system.
6. Check that the fluid is not foamy and the fluid level has not lowered.
   If a problem is found, add fluid as necessary and repeat from step 5.

Note
If bleeding is not done completely, the following problems may appear:
- **Foamy fluid on level gauge.**
- **Noise from power steering oil pump.**

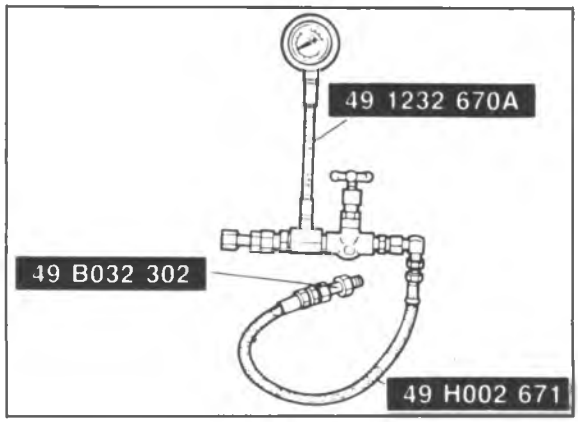

86U10X-023

POWER STEERING PRESSURE

1. Disconnect the high-pressure hose of the gear housing side, and attach the **SST**.

   Tightening torque:
   39—49 N·m (4.0—5.0 m-kg, 29—36 ft-lb)

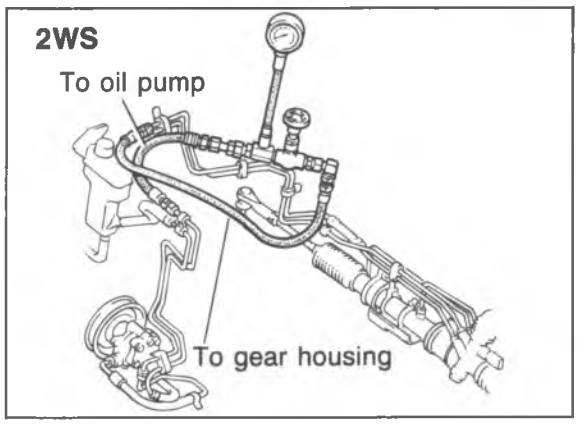

86U10X-024

2. Bleed air from the system.
3. Open the gauge valve fully, then start the engine and turn the steering wheel fully left and right to raise the fluid temperature to **50—60°C (122—140°F)**.
4. To measure the fluid pressure generated by the oil pump, close the gauge valve completely and increase the engine speed to **1,000—1,500 rpm**. If the fluid pressure is low, replace the oil pump assembly.

   Warning
   If the valve is left closed for more than 15 seconds, the fluid temperature will increase excessively and adversely affect the oil pump.

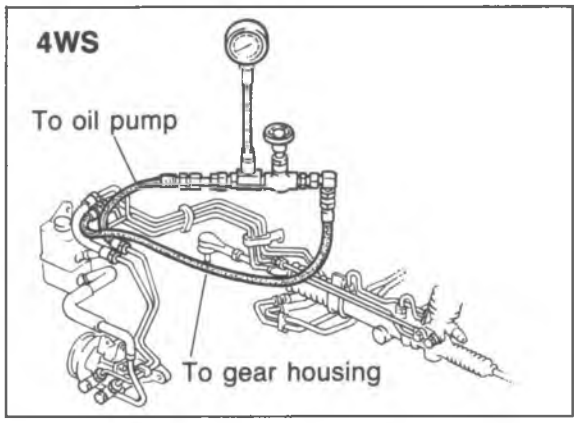

86U10X-025

Oil pump fluid pressure
2WS
7,355—7,846 kPa
(75—80 kg/cm^2, 1,066—1;138 psi)

4WS
Front 8,093—8,829 kPa
(82.5—90.0 kg/cm^2, 1,173—1,280 psi)
Rear 7,112—7,848 kPa
(72.5—80.0 kg/cm^2, 1,031—1,138 psi)

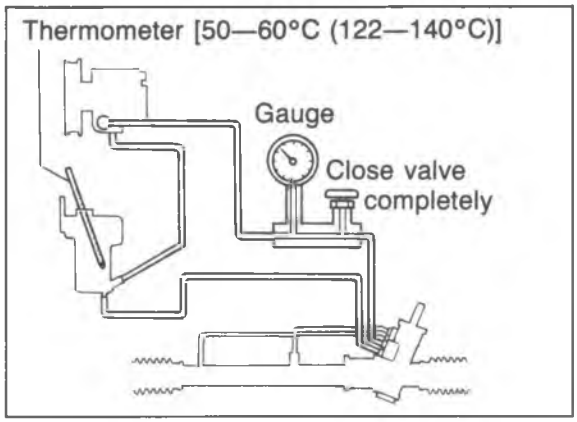

86U10X-026

5. To measure the fluid pressure generated at the gear housing, first open the gauge valve completely, increase the engine speed to **1,000—1,500 rpm**, and then turn the steering wheel fully to the left and right.

   Warning
   If the steering wheel is kept in the fully turned position for more than 15 seconds, the fluid temperature will rise excessively.

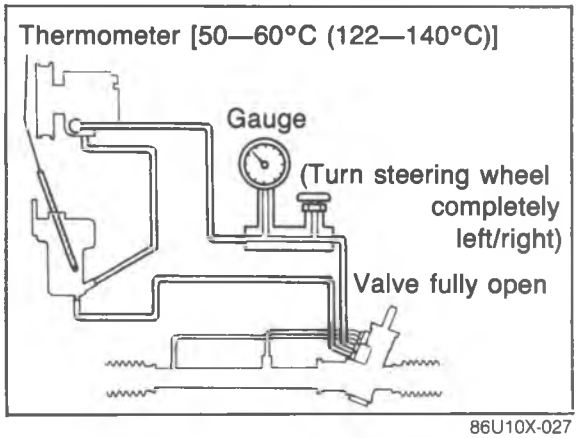

86U10X-027

Gear housing fluid pressure
2WS
7,355—7,846 kPa
(75—80 kg/cm^2, 1,066—1,138 psi)
4WS
Front 8,093—8,829 kPa
(82.5—90.0 kg/cm^2, 1,173—1,280 psi)
Rear More than 2,943 kPa
(30 kg/cm^2, 427 psi)

If the fluid pressure is low, repair or replace the gear box.

6. Remove the gauge set, then tighten the high-pressure hose to the specified torque.

   Tightening torque:
   31—36 N·m (3.2—3.7 m-kg, 23—27 ft-lb)

7. Bleed the air from the system. (Refer to page 10—15.)

TIE-ROD END BOOT

REMOVAL AND INSTALLATION

1. Jack up the vehicle and support it with safety stands.
2. Remove in the sequence shown in the figure, referring to the removal note for specially marked parts.
3. Install in the reverse order of removal, referring to the installation note for specially marked parts.
4. Tighten all nuts and bolts to the specified torque, referring to the figure.

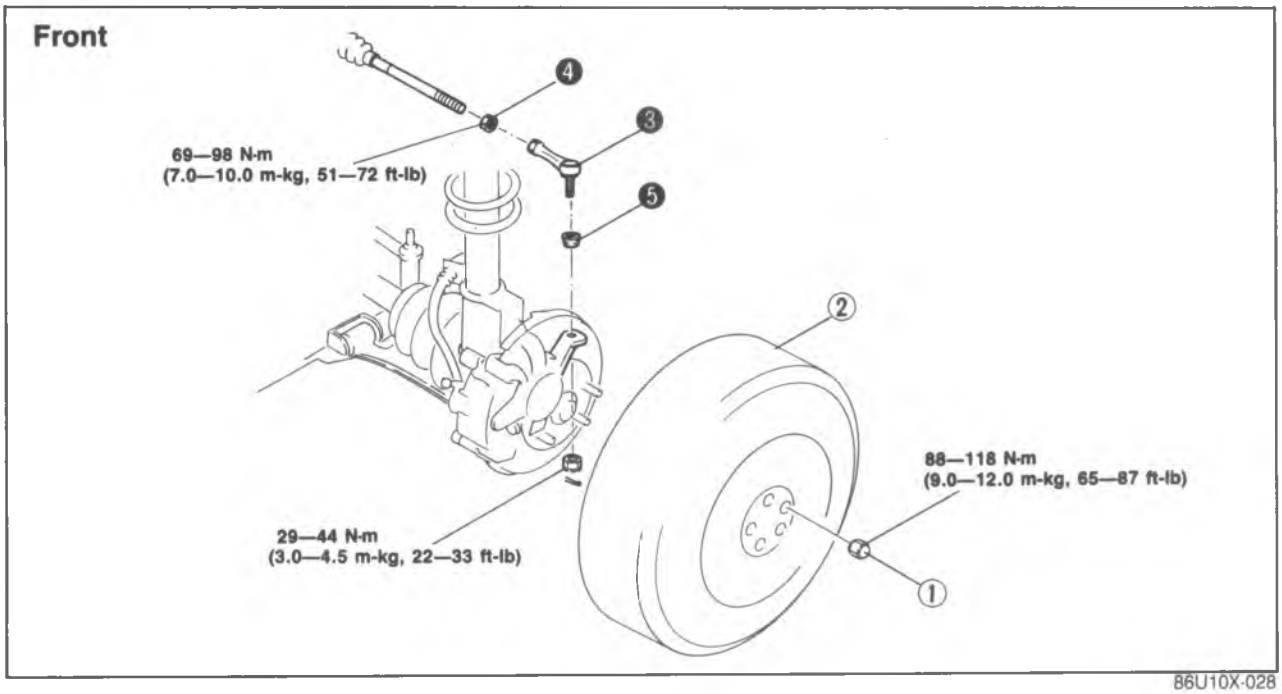

1. Lug nuts
2. Wheel
3. Tie-rod end
4. Nut
5. Boot

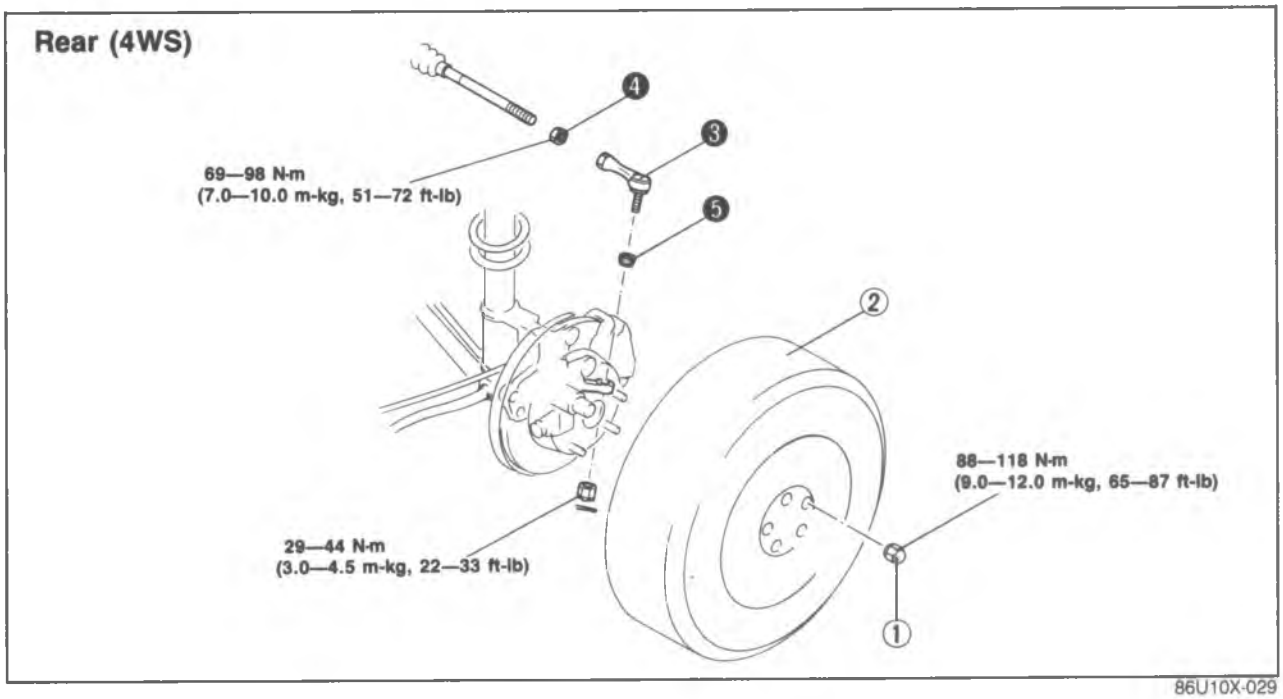

1. Lug nuts
2. Wheel
3. Tie-rod end
4. Nut
5. Boot

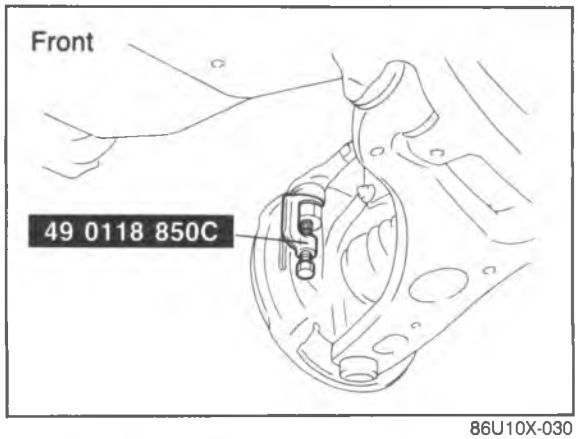

86U10X-030

Removal Note
Tie-rod end
Separate the tie-rod end from the knuckle using the **SST**.

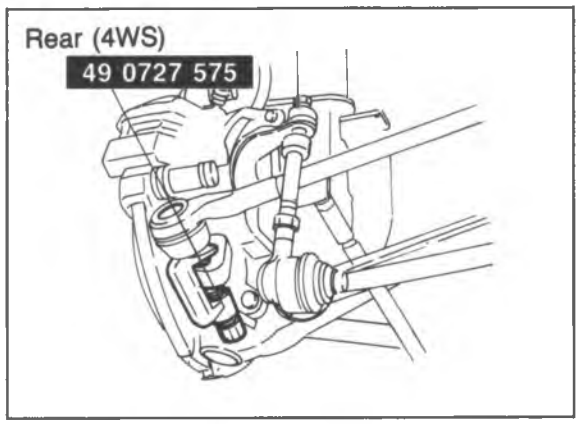

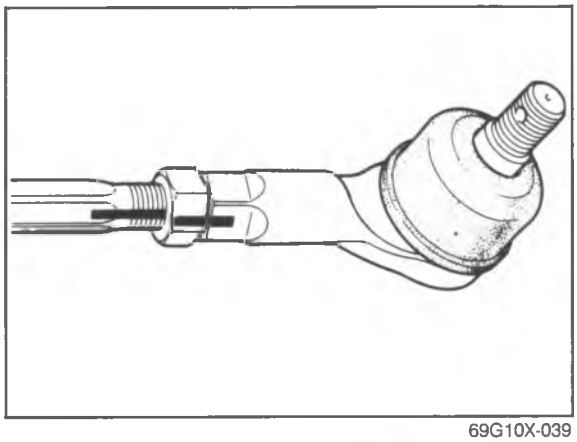

69G10X-039

Nut
Before removing the nut from the tie-rod end, make a mark for reference during installation.

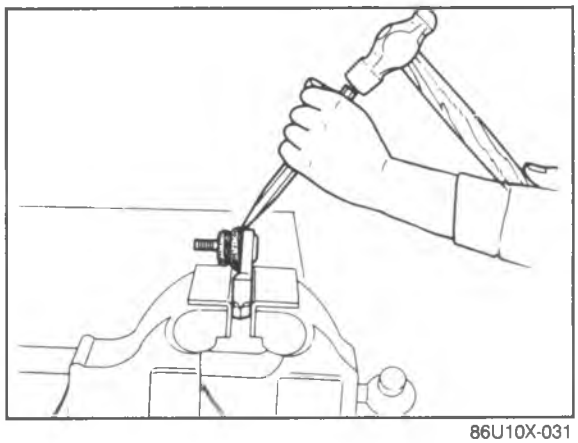

86U10X-031

Boot
Secure the tie-rod end in a vise. Place a chisel against the boot and hold it at the angle shown. Remove the boot by tapping with a hammer.

Caution
Be careful not to scar the part where the boot is attached to the tie-rod end.

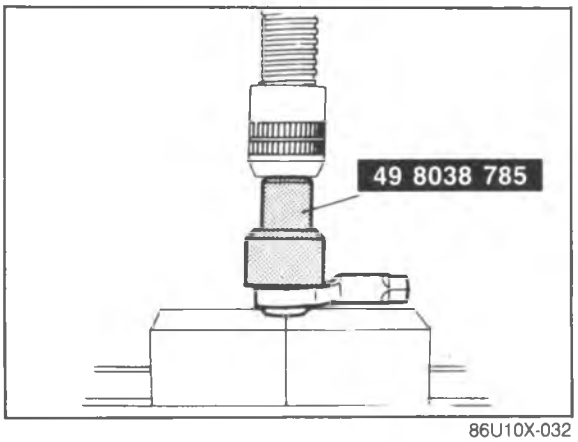

86U10X-032

Installation Note
Boot
Put a small amount of grease (lithium base, NLGI No. 2) into the new boot and set it onto the **SST**. Install the boot to the tie-rod end with a press.

STEERING WHEEL AND COLUMN

STRUCTURAL VIEW

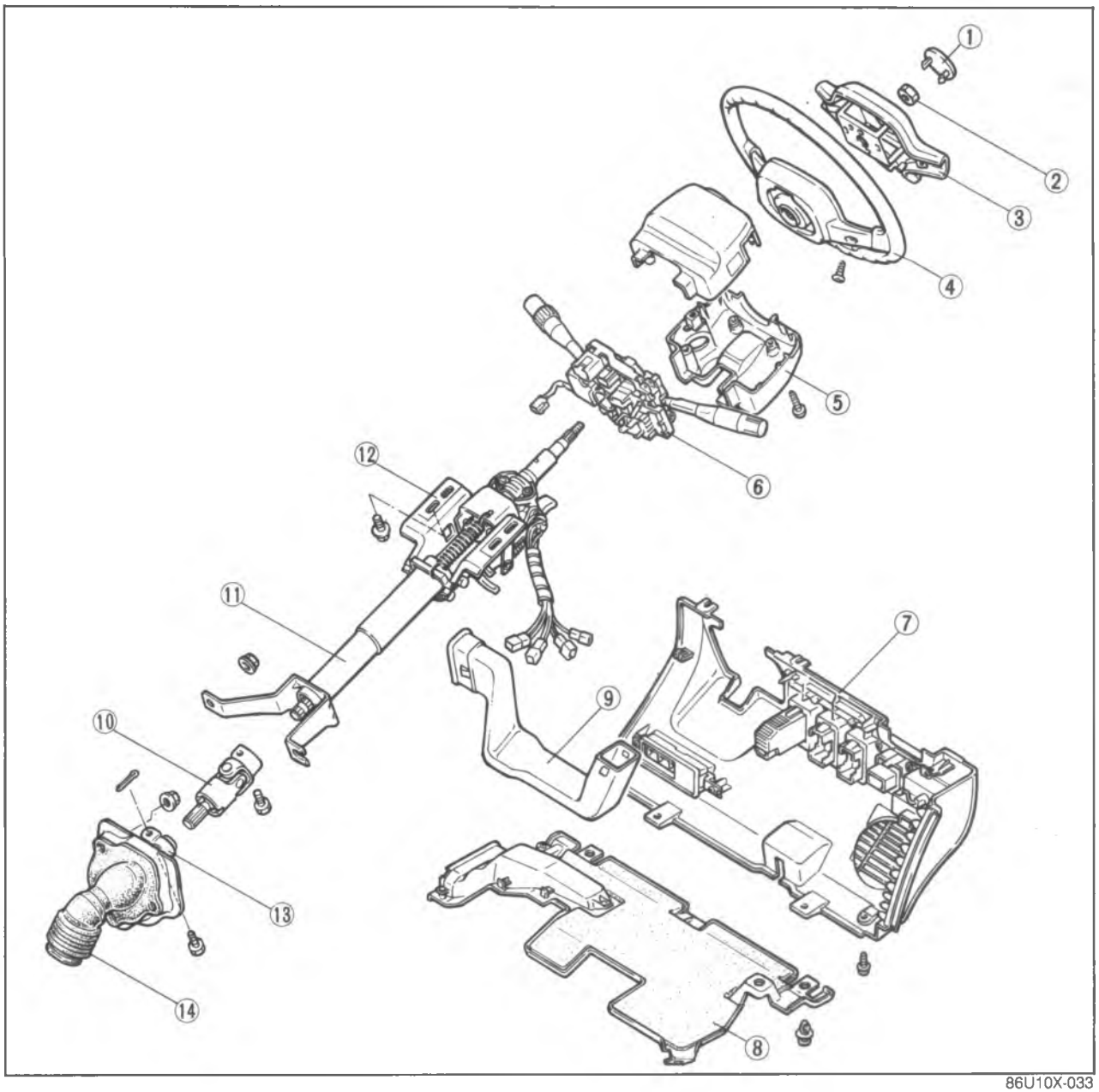

86U10X-033

1. Ornament
2. Lock nut
3. Horn cap
4. Steering wheel
5. Column cover
6. Combination switch
7. Switch panel
8. Lower panel
9. Duct
10. Universal joint
11. Steering shaft
12. Steering shaft assembly
13. Intermediate shaft
14. Dust boot

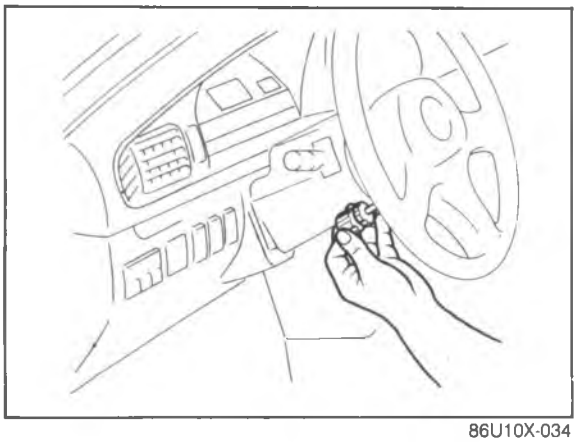

86U10X-034

REMOVAL

1. Disconnect the negative battery cable.

Type A

2. Remove the ornament from the steering wheel.
3. Remove the locknut and the horn cap.

Type B

2. Remove the horn cap.
3. Remove the locknut.

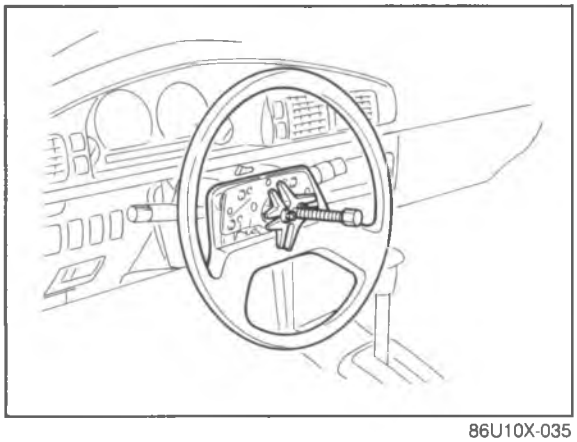

86U10X-035

4. The steering wheel must be removed with a suitable puller.

Caution
Be careful not to subject the steering shaft to severe impact in the axial direction when removing or installing the steering wheel.

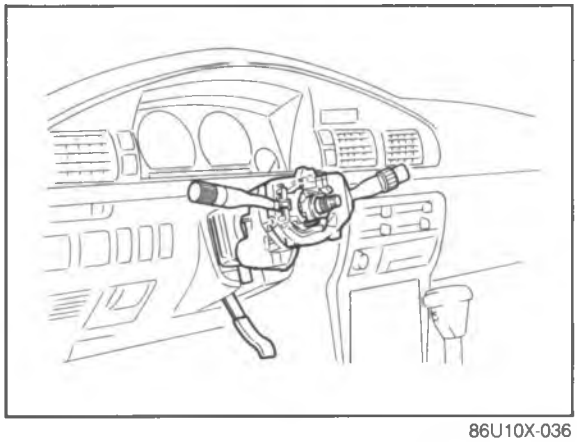

86U10X-036

5. Remove the column cover.
6. Disconnect the ignition switch connector.
7. Remove the combination switch.

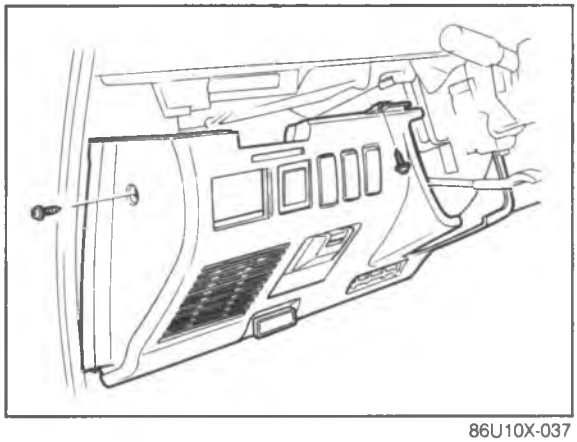

86U10X-037

8. Remove the lower panel and switch panel.
9. Remove the duct.

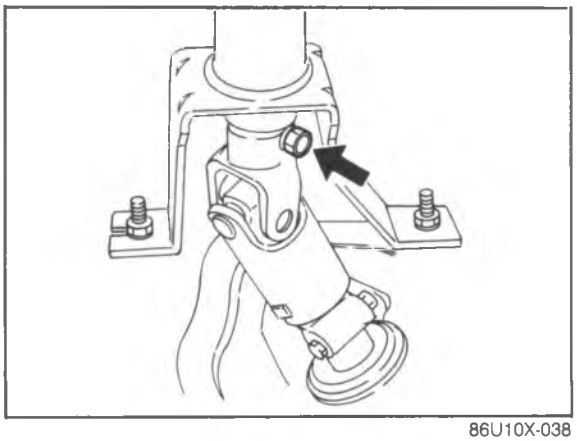

86U10X-038

10. Remove the bolt connecting the universal joint and steering shaft.

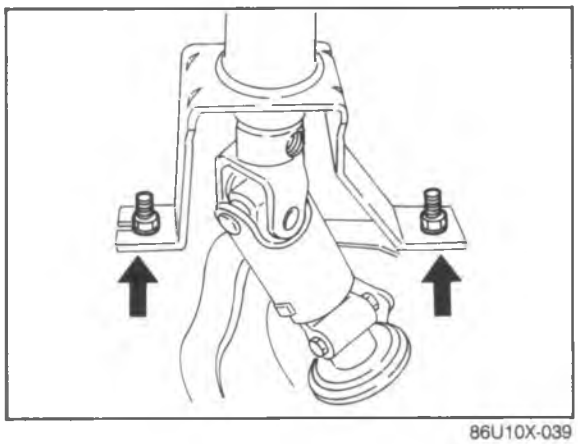

86U10X-039

11. Remove the nuts from the lower bracket of the steering shaft.

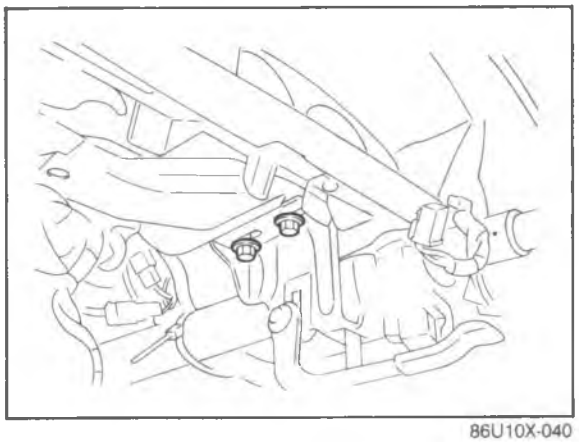

86U10X-040

12. Remove the bolts from the upper bracket of the steering shaft.
13. Remove the steering shaft assembly.

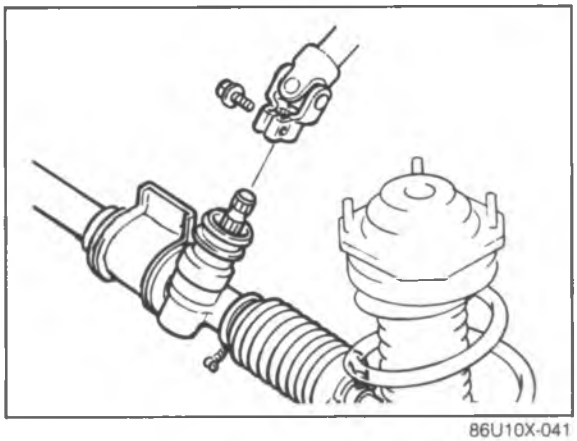

86U10X-041

14. Remove the bolts from the intermediate shaft.

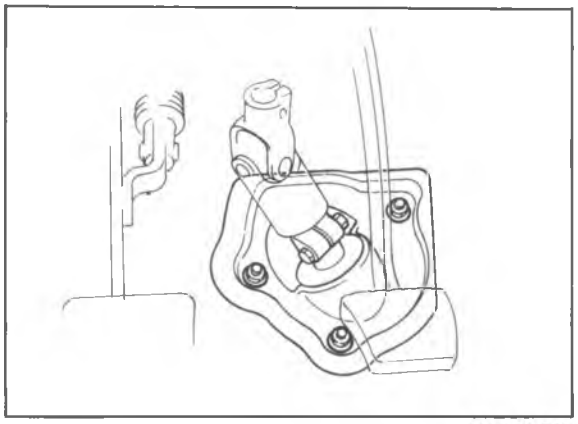

86U10X-042

15. Remove the dust cover assembly.
16. Remove the intermediate shaft.

DISASSEMBLY AND ASSEMBLY

1. Disassemble in the sequence shown in the figure, referring to the disassembly note for specially marked parts.
2. Assemble in the reverse order of removal, referring to the assembly note.

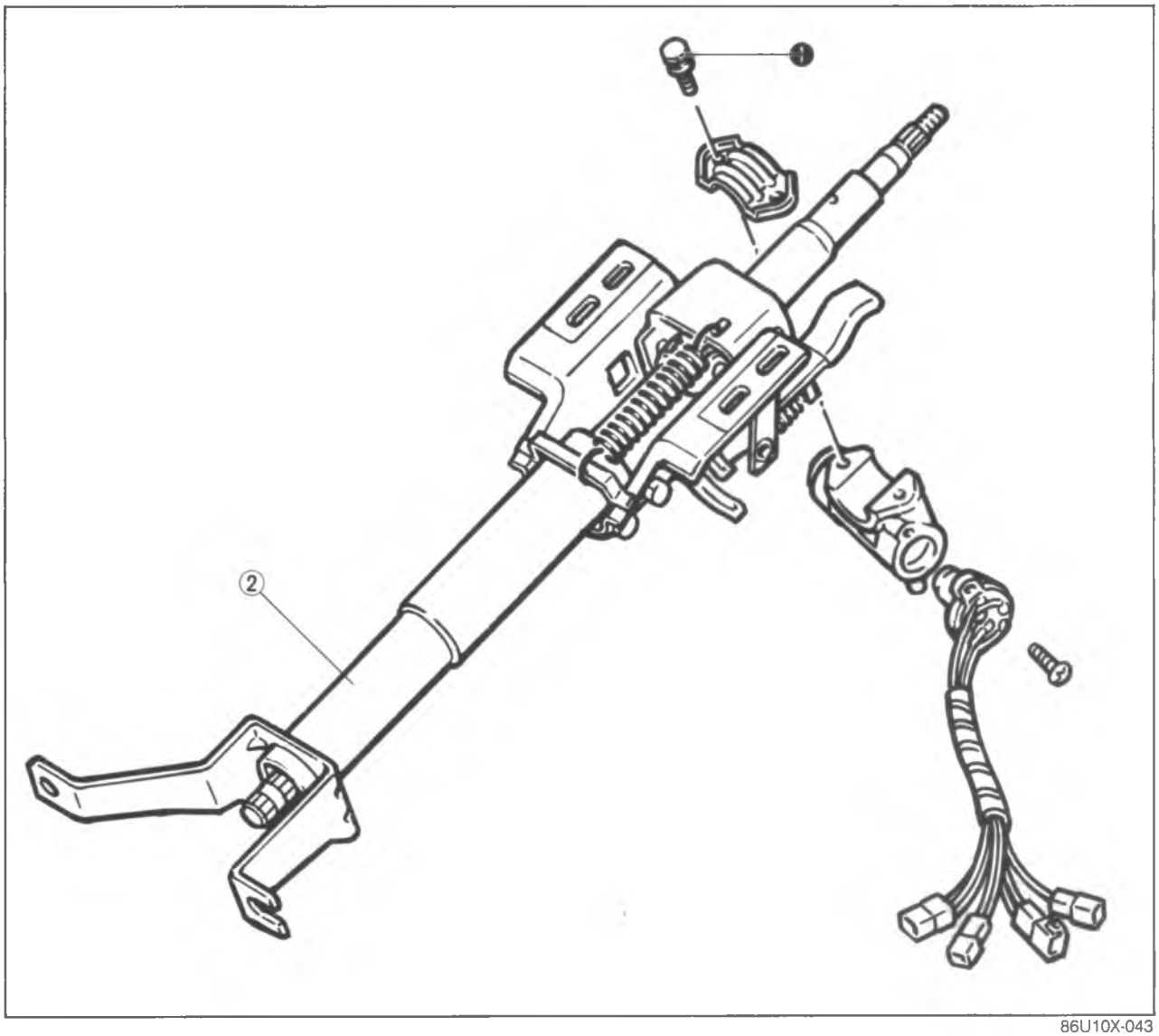

86U10X-043

1. Steering lock bolt
2. Steering shaft

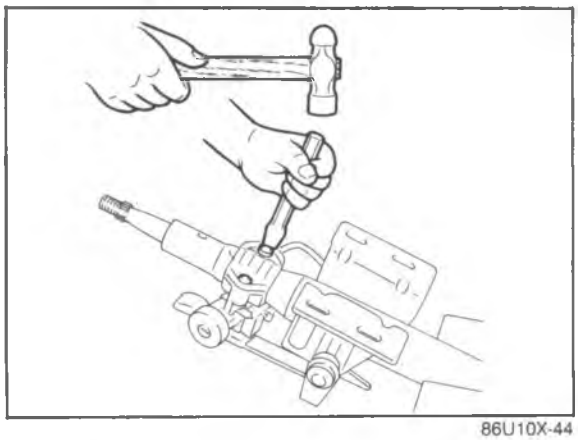

86U10X-44

Disassembly Note
Steering lock
Use a chisel to make a groove in the head of the steering lock installation screws. Remove the screws with a screwdriver; then remove the steering lock.

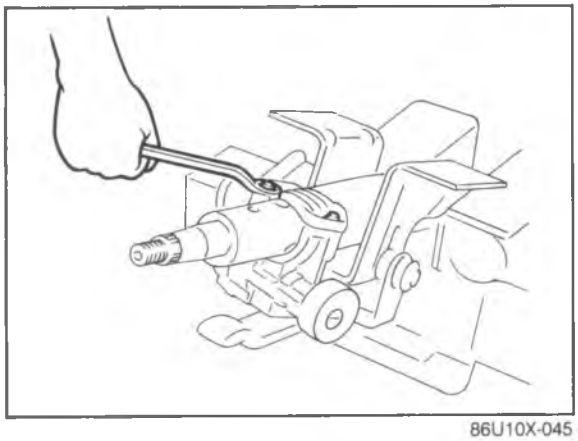

86U10X-045

Assembly Note
Steering lock
Install the steering lock on the jacket; then use new steering lock mounting screws, and tighten them until the heads break off.

Caution
Check the operation of the lock while tightening the steering lock mounting screws.

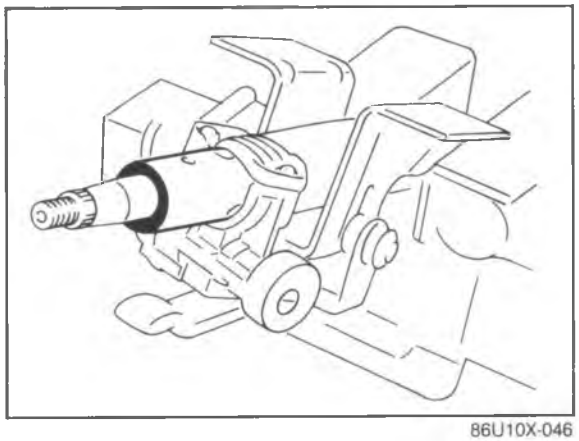

86U10X-046

INSPECTION
Check the following and replace any faulty parts.

Shaft
1. Wear of column bushing

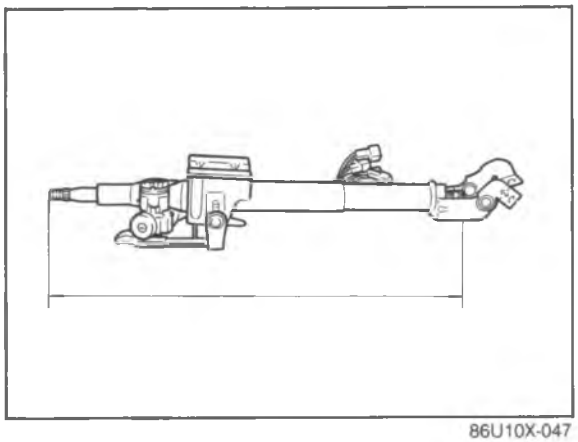

86U10X-047

2. Length of steering column

Length:
614—616 mm (24.2—24.3 in)

3. Damage of column

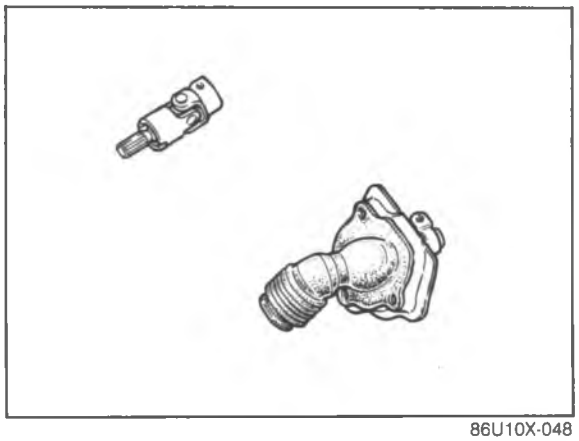

86U10X-048

Intermediate Shaft and Universal Joint
Looseness, abnormal noise, or sticking while rotating

Dust Boot
Damage or deterioration

INSTALLATION

Install in the reverse order of removal, referring to the installation note for specially marked parts.

Torque specifications

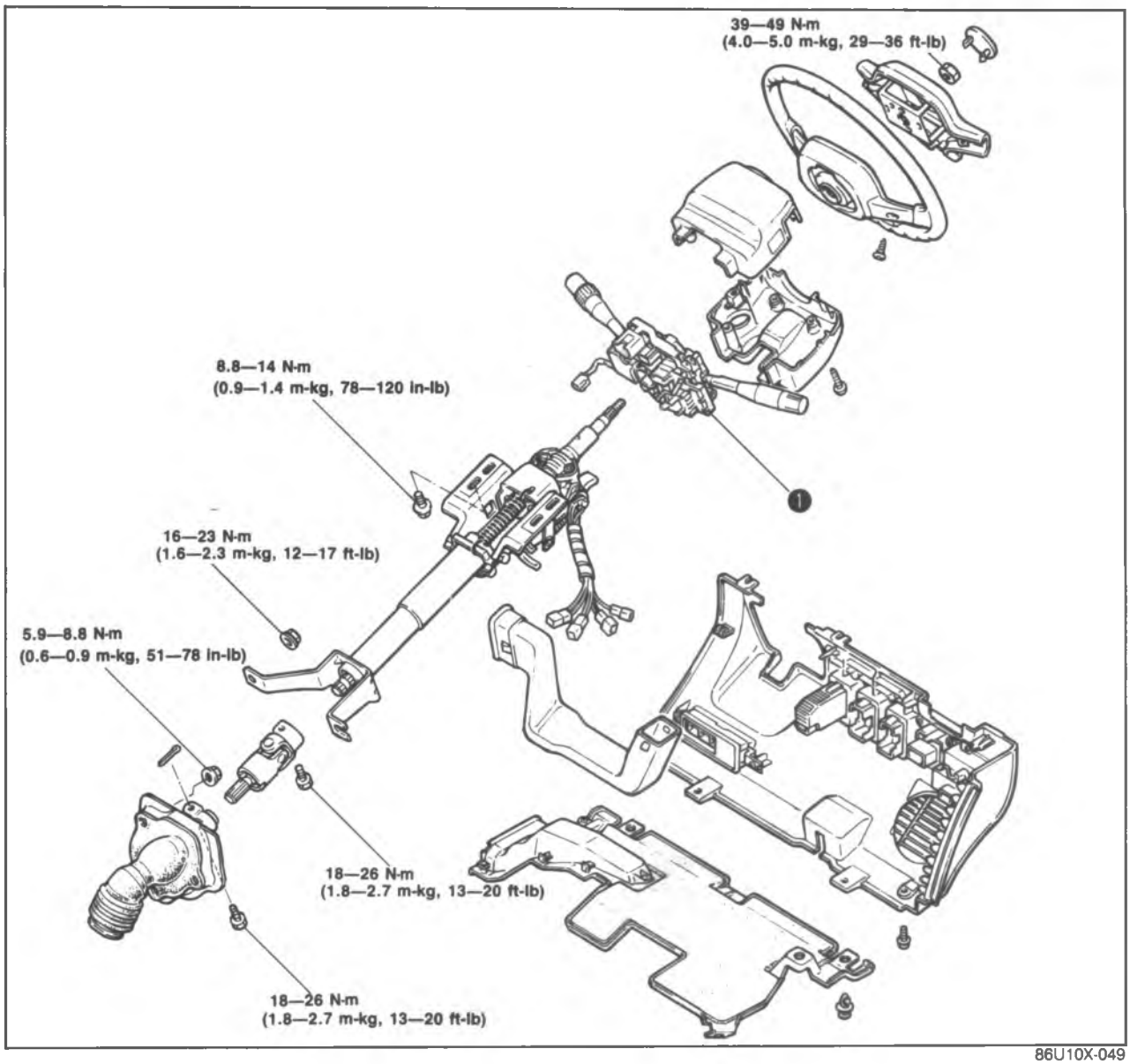

86U10X-049

1. Combination switch

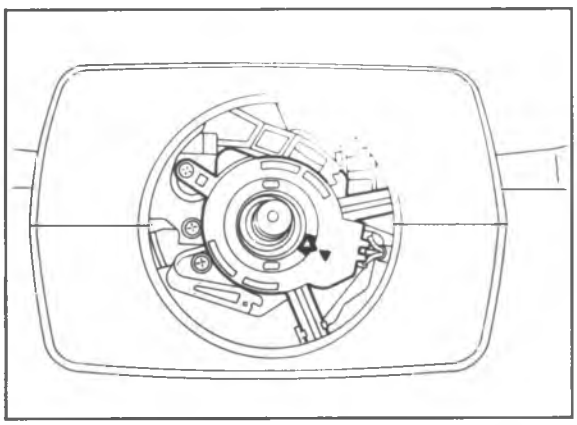

86U10X-050

Installation Note
Combination switch (angle sensor)
Position the angle sensor in the following order:
1. Set the wheels in the straight-ahead position.
2. Align the alignment marks (arrows).

STEERING GEAR AND LINKAGE

STRUCTURAL VIEW

Manual steering

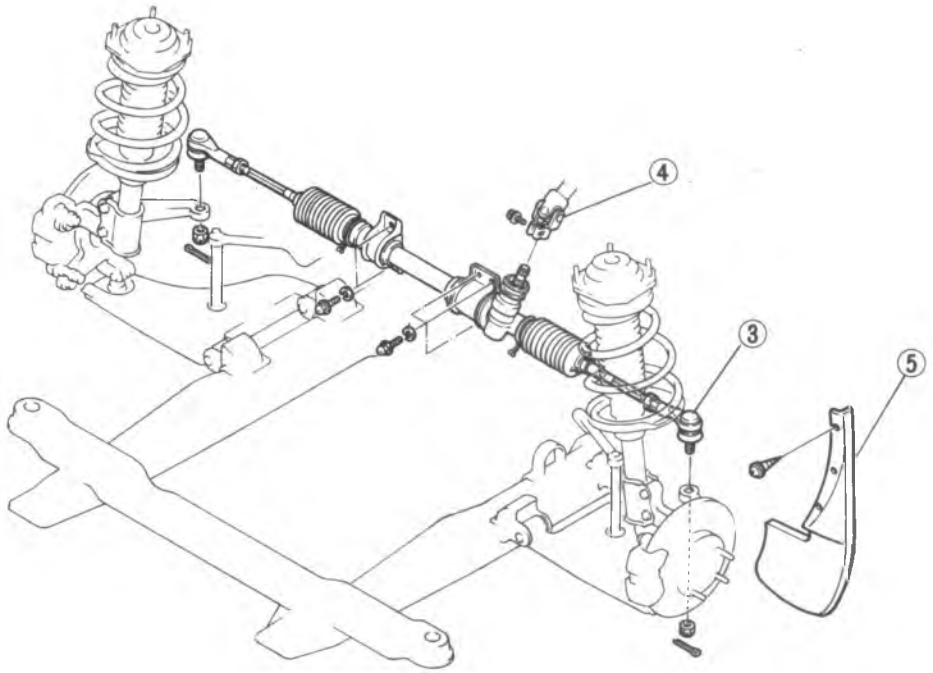

Power steering

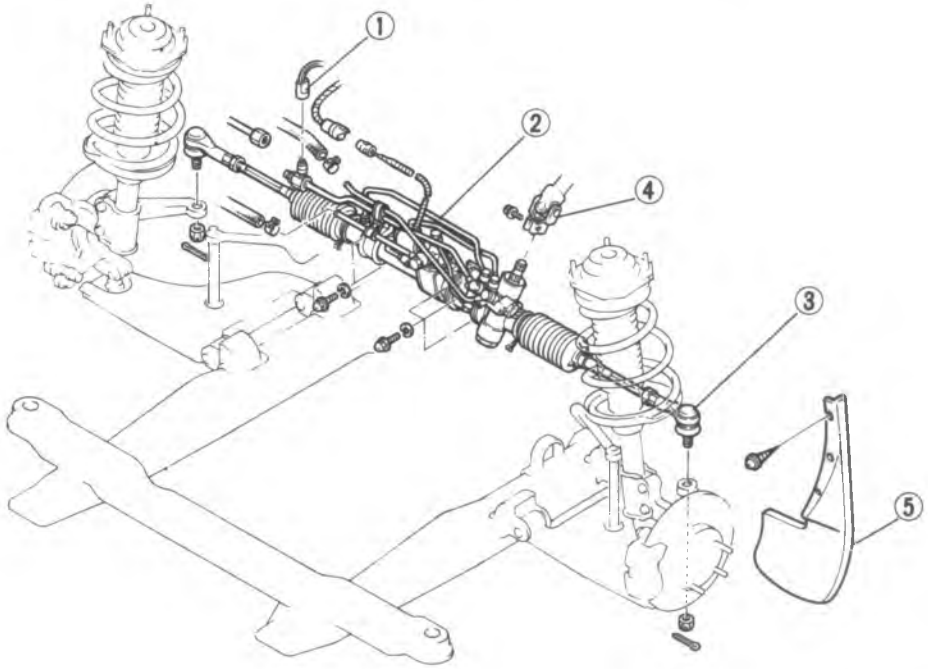

86U10X-051

1. Oil pressure switch connector
2. Pipes
3. Tie-rod end
4. Steering shaft universal joint
5. Mud flap

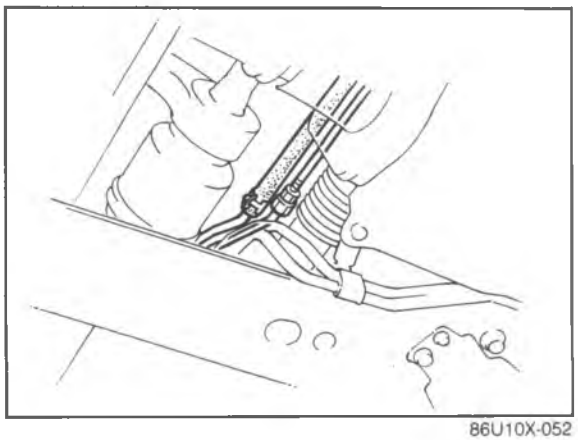

86U10X-052

REMOVAL

Note
The power steering fluid will leak out when the return hose or the pressure hose is disconnected. Prepare a suitable container for it to drain into.

1. Disconnect the negative battery cable.
2. Disconnect the pressure switch connector.
3. Raise the vehicle on a lift or safely stands, and remove the front wheels.
4. Disconnect the power steering hose and pipe.

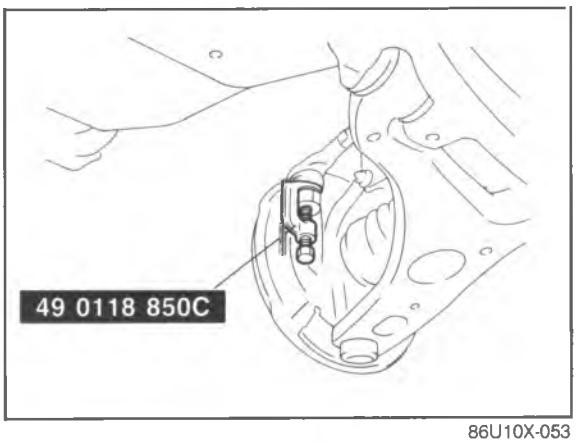

86U10X-053

5. Disconnect the tie-rod ends from the knuckles with the **SST**.
6. Remove the steering shaft universal joint.

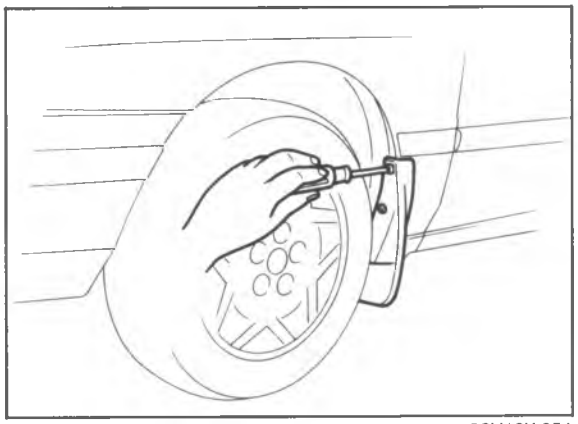

86U10X-054

7. Remove the mud flap.
8. Remove the mounting bolts and the steering gear.

INSTALLATION

Install in the reverse order of removal.

Torque Specifications

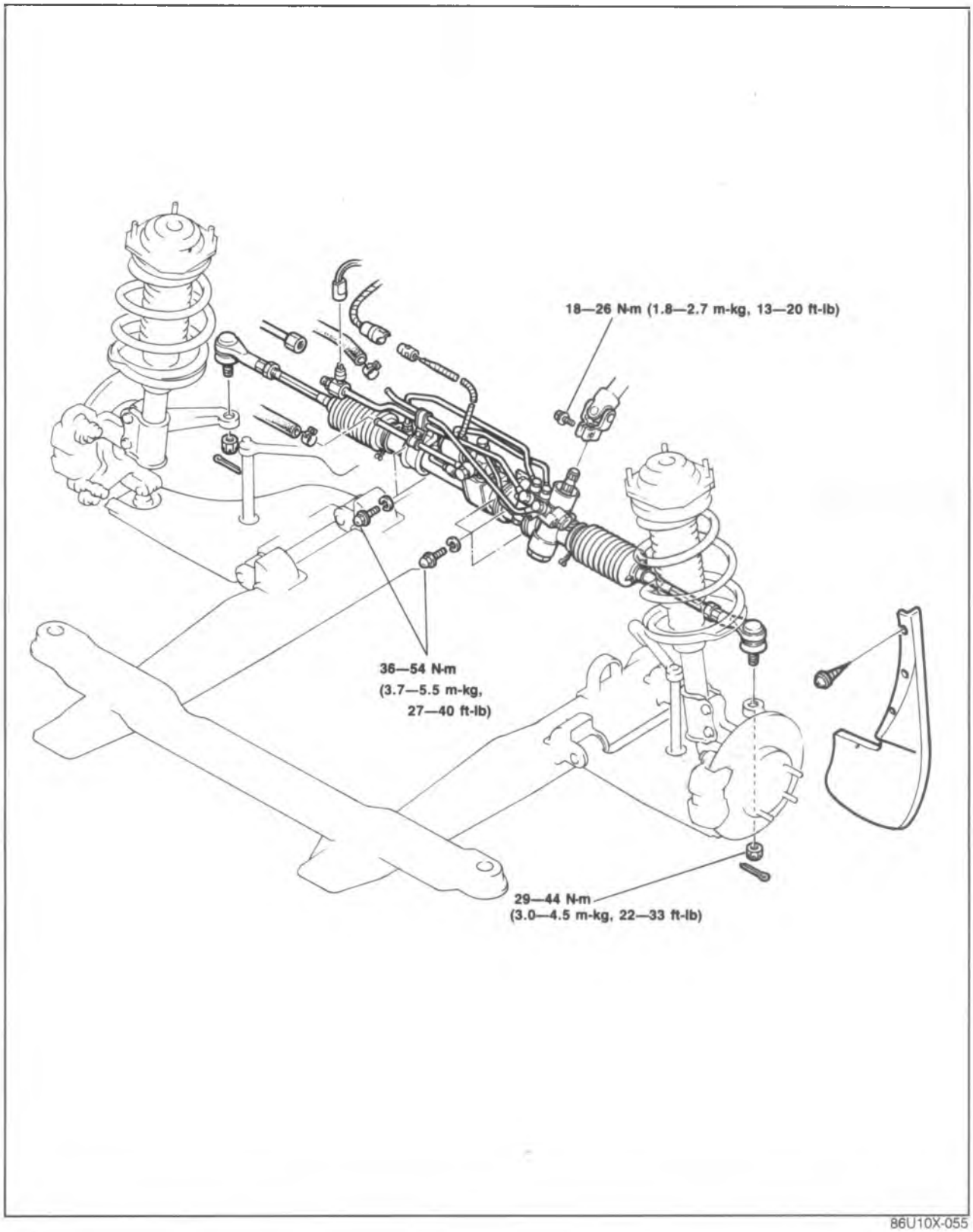

86U10X-055

4-WHEEL STEERING GEAR AND LINKAGE

STRUCTURAL VIEW

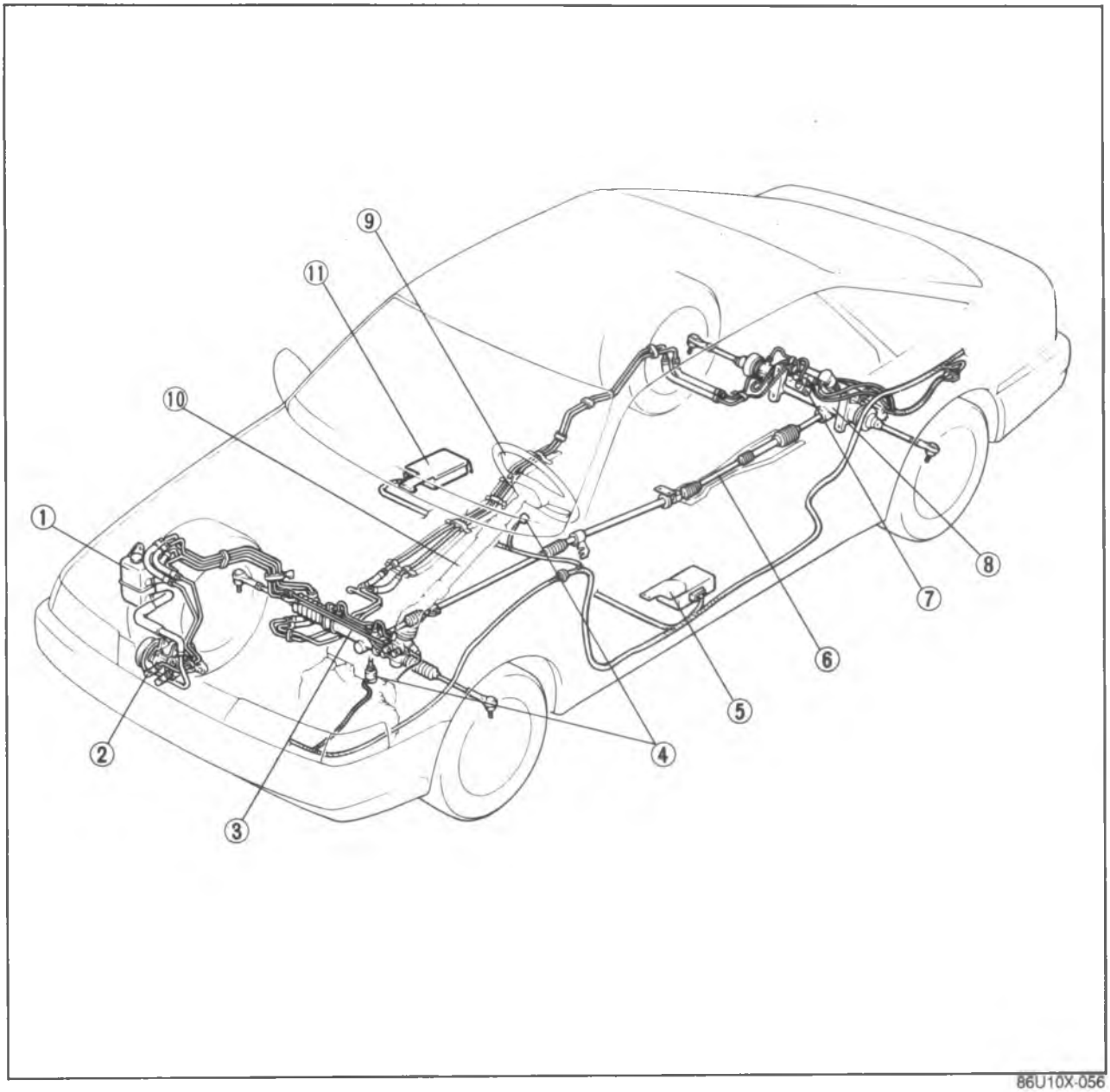

86U10X-056

1. Reserve tank
2. Oil pump
3. Front steering gear assembly
4. Speed sensor
5. Control unit
6. Steering angle transfer shaft
7. Solenoid valve
8. Rear steering gear assembly
9. Steering wheel
10. Steering shaft
11. Relay and timer

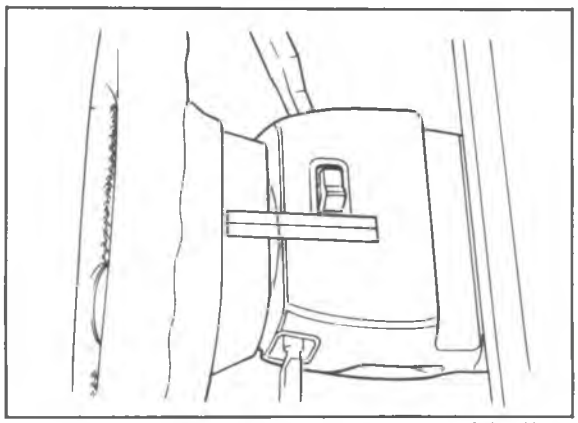

86U10X-301

4WS PERFORMANCE INSPECTION

1. Steering Angle Transfer Shaft Alignment (Simple inspection)

(1) Put masking tape on the steering wheel and column cover.

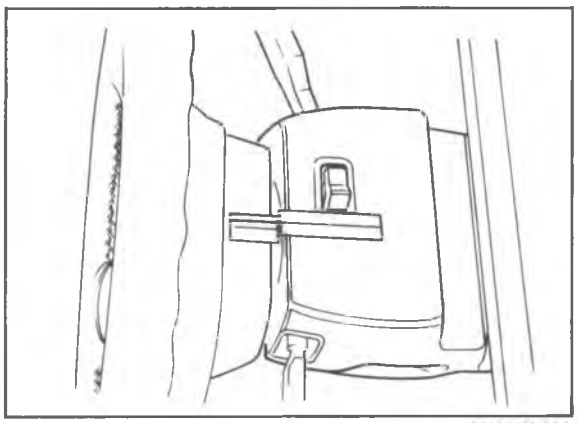

86U10X-302

(2) Drive the vehicle on a straight, flat road for at least 30 m (100 ft) and note the steering wheel position. Stop and mark the straight-ahead position on the steering wheel and column cover tape. Drive the vehicle again and check the marks.

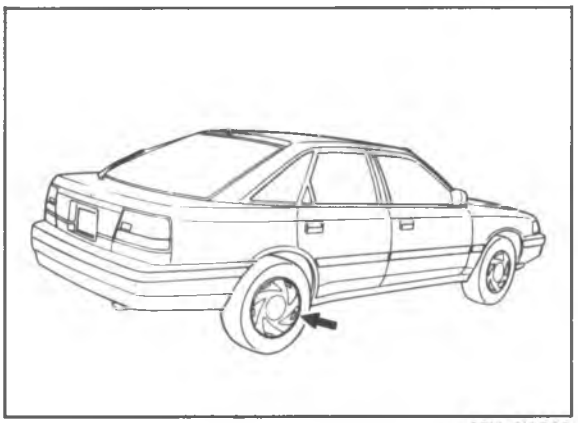

86U10X-303

(3) With the marks between the steering wheel and column cover aligned, check that the rear wheels do not turn off center when the engine is started.

(4) If the rear wheels move, adjust the steering angle transfer shaft.

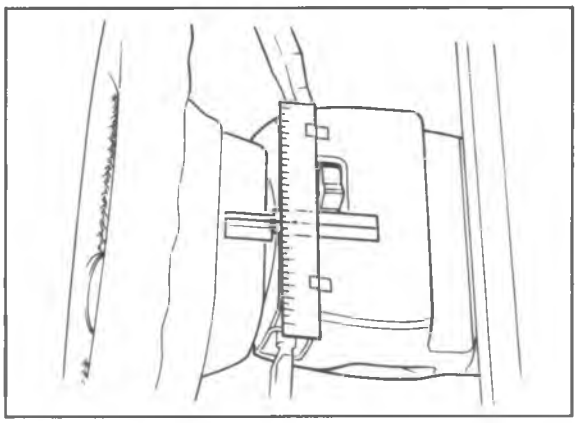

86U10X-304

(Inspection by dial indicator)

(1) Mark between the steering wheel and column cover as shown above.

(2) Attach a scale on the column cover as shown in the illustration.

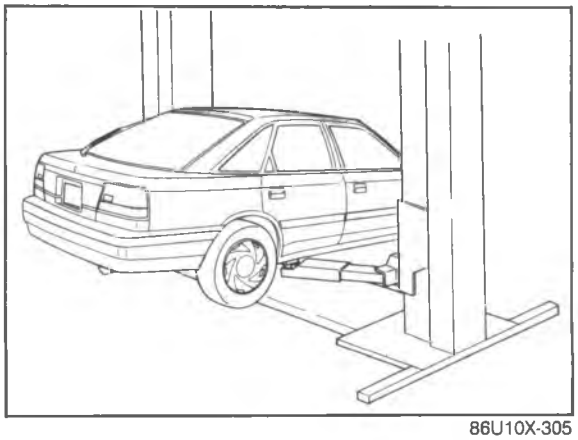

86U10X-305

(3) Rise the vehicle on a lift or safty stands.
(4) Set a dial indicator against one rear tire. Set the pointer to 0.

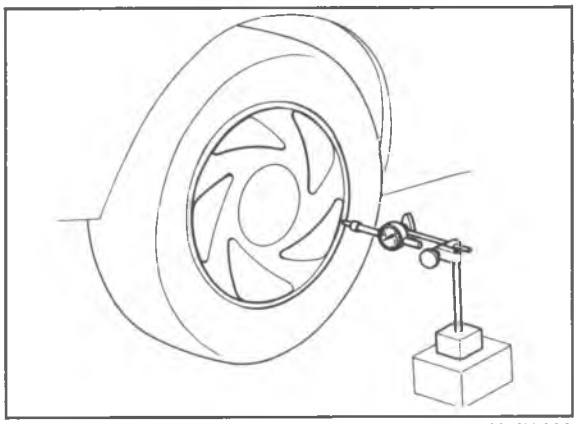

86U10X-306

(5) With the marks on the steering wheel and column cover aligned, start the engine and turn the steering wheel slowly to the right. Using the scale on the column cover, note the rotation of the steering wheel at the point where the rear wheels begin to turn (dial indicator begins to move).

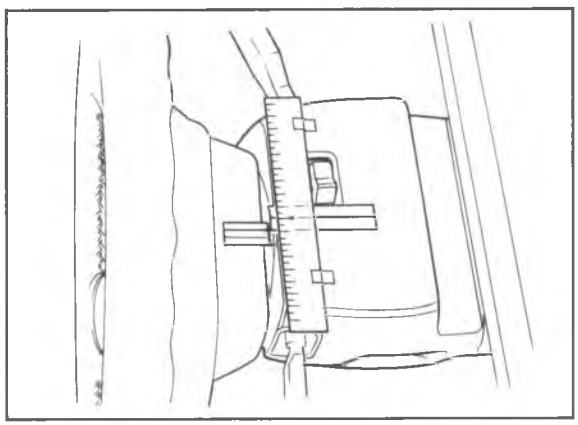

86U10X-307

(6) Turn the steering wheel left and right a few times to equalize the hydraulic pressure. Realign the marks between the steering wheel and column cover.

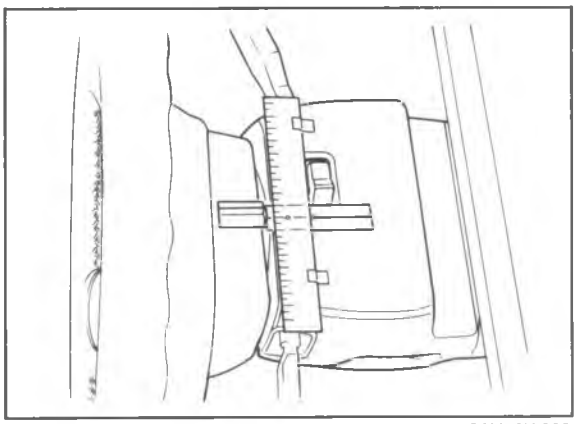

86U10X-308

(7) Reset the dial indicator to 0 and turn the steering wheel slowly to the left. Using the scale on column cover, again note the rotation of the steering wheel at the point where the rear wheels begin to turn (dial indicator begins to move).

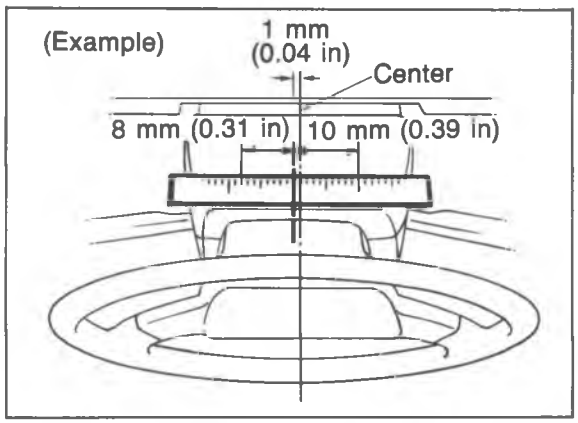

86U10X-309

(8) The center position can be determined from the left/right measurements in (5) and (7) above.

Example:
Right rotation....10 mm (0.39 in)
Left rotation....8 mm (0.31 in)
Center = Right 1 mm (0.04 in)

(9) Check that the center is within specification.

Specification
= R 5 mm (0.4 in) to L 5 mm (0.4 in)

(10) If not correct, adjust the steering angle transfer shaft.

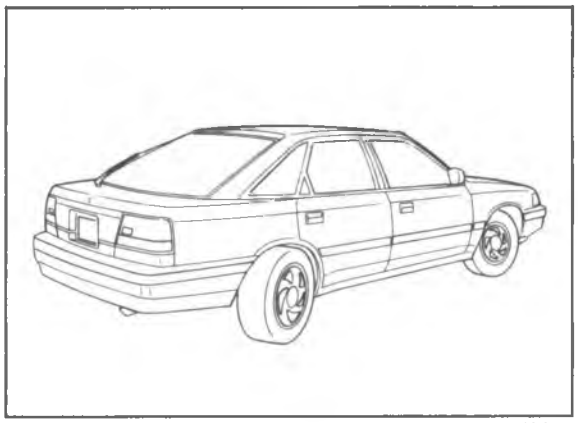

86U10X-310

2. Steering Inspection
With the vehicle stopped and the engine running, check that the rear wheels turn in the opposite direction when the steering wheel is turned, and that there is no abnormal noise.

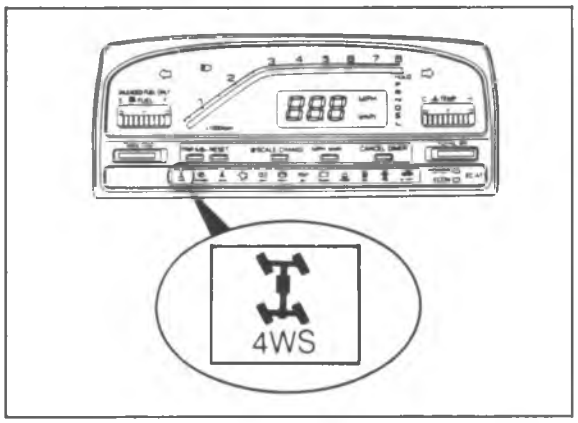

86U10X-311

3. 4WS Electric System Inspection
Drive the vehicle and check that the 4WS warning light does not come on at over 40 km/h (25mph).

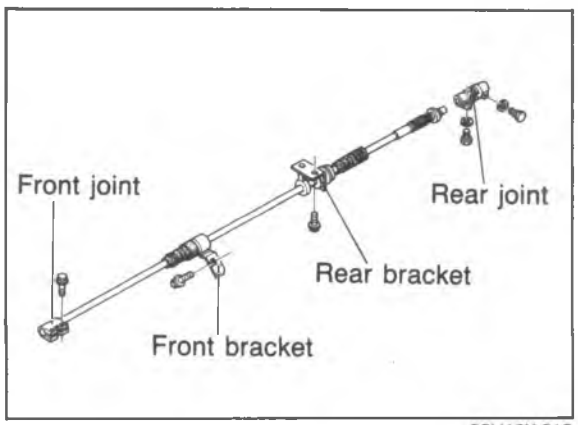

86U10X-312

ADJUSTMENT OF STEERING ANGLE TRANSFER SHAFT

If the steering angle transfter shaft is disconnected from the front or rear steering gear or after adjusting the wheel alignement, or the rear steering anle is not correct, adjust the rear turning angle as described below.

Warning
Improper installation of the 4WS steering transfer shaft may effect control of the vehicle and result in the risk of an accident or personal injury.

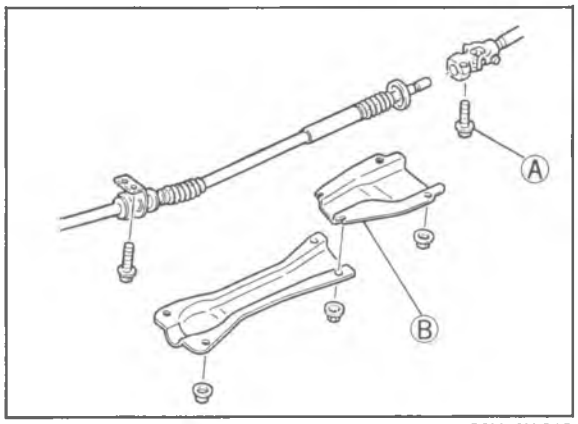

86U10X-313

1. Raise the vihicle on a lift or safety stands.
2. Remove cover B and joint bolt A.
3. Slide the shaft out of the joint.

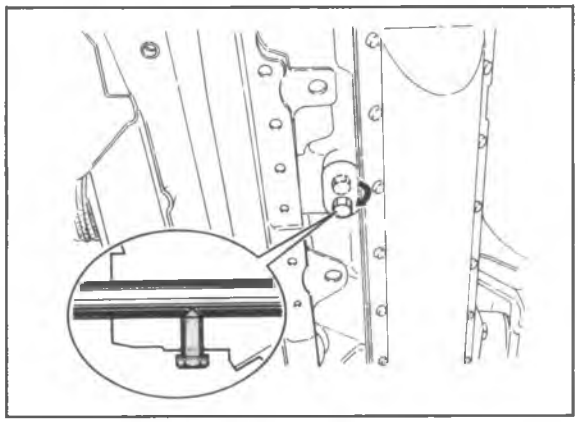

86U10X-314

4. Remove the plug from the rear steering gear. Sight through the hole and turn the steering angle input shaft to align the notch in the input shaft with the center of hole.
5. Remove the set bolt attached to the rear steering gear, and install it in the steering gear to set the input shaft.

Tightening torque:
4.9—7.8 N·m (50—80 cm-kg, 43—69 in-lb)

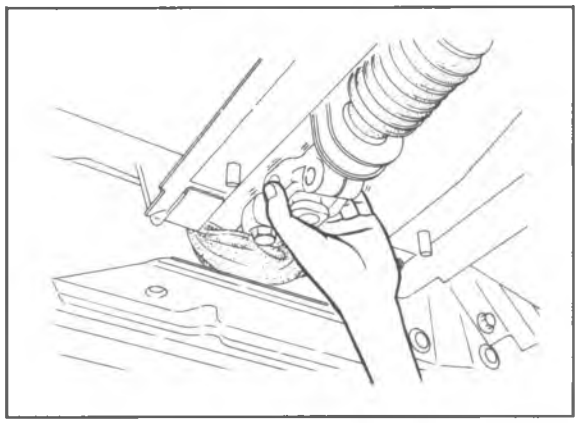

86U10X-315

Note
After the input shaft is set, manually turn the rear joint and chack that the shaft does not move.

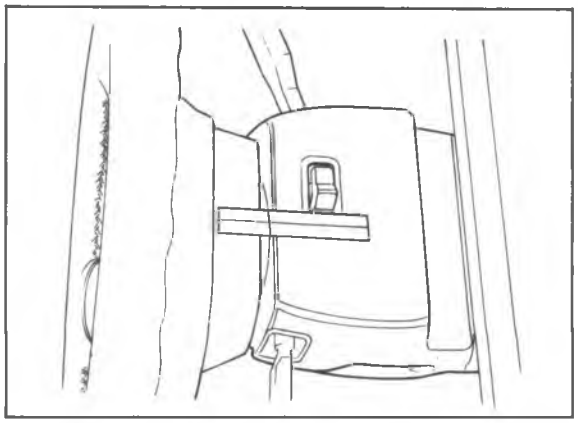

86U10B-316

6. Lower the vehicle.
7. Check and adjust the front and rear wheel alignment if necessary. (Refter to Section 13.)
8. Drive the vehicle and mark the steering straight-ahead position.(Refter to page 10—32.)

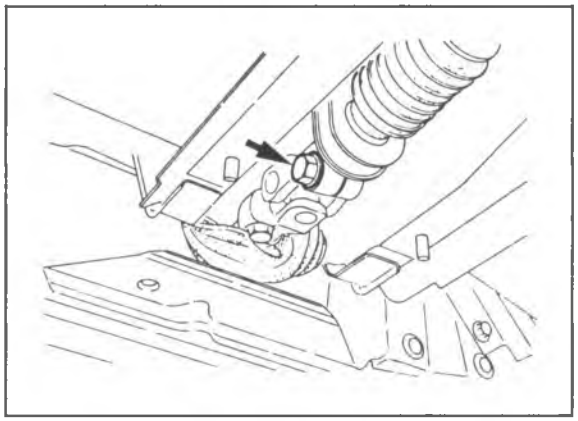

86U10X-317

9. Install the shaft and rear joint removed at step 2, and tighten the bolt to the specified torque.

   Tightening torque: 22—30 N·m (2.2—3.1 m-kg, 191—269 in-lb)

10. Install and tighten a new wire on the joint boot.

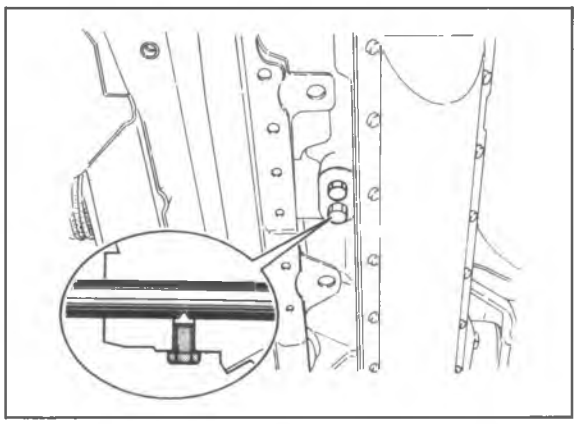

86U10X-318

11. Install the set bolt in the rear steering gear.

    Tightening torque: 20—28 N·m (2.0—2.9 m-kg, 14—21 ft-lb)

    After installing the steering angle transfer shaft, check the steering angle transfer shaft alignment. [Refter to page 10—32 (Simple inspection).]

REMOVAL AND INSTALLATION

1. Jack up the vehicle and support it with safety stands.
2. Remove in the sequence shown in the figure, referring to the removal note for specially marked parts.
3. Install in the reverse order of removal, referring to installation note for specially marked parts.
4. Tighten all nuts and bolts to the specified torque, referring to the page 10—39.

Note
The power steering fluid will leak out when the return hose or the pressure hose is disconnected. Prepare a suitable container for it to drain into.

Front Steering Gear

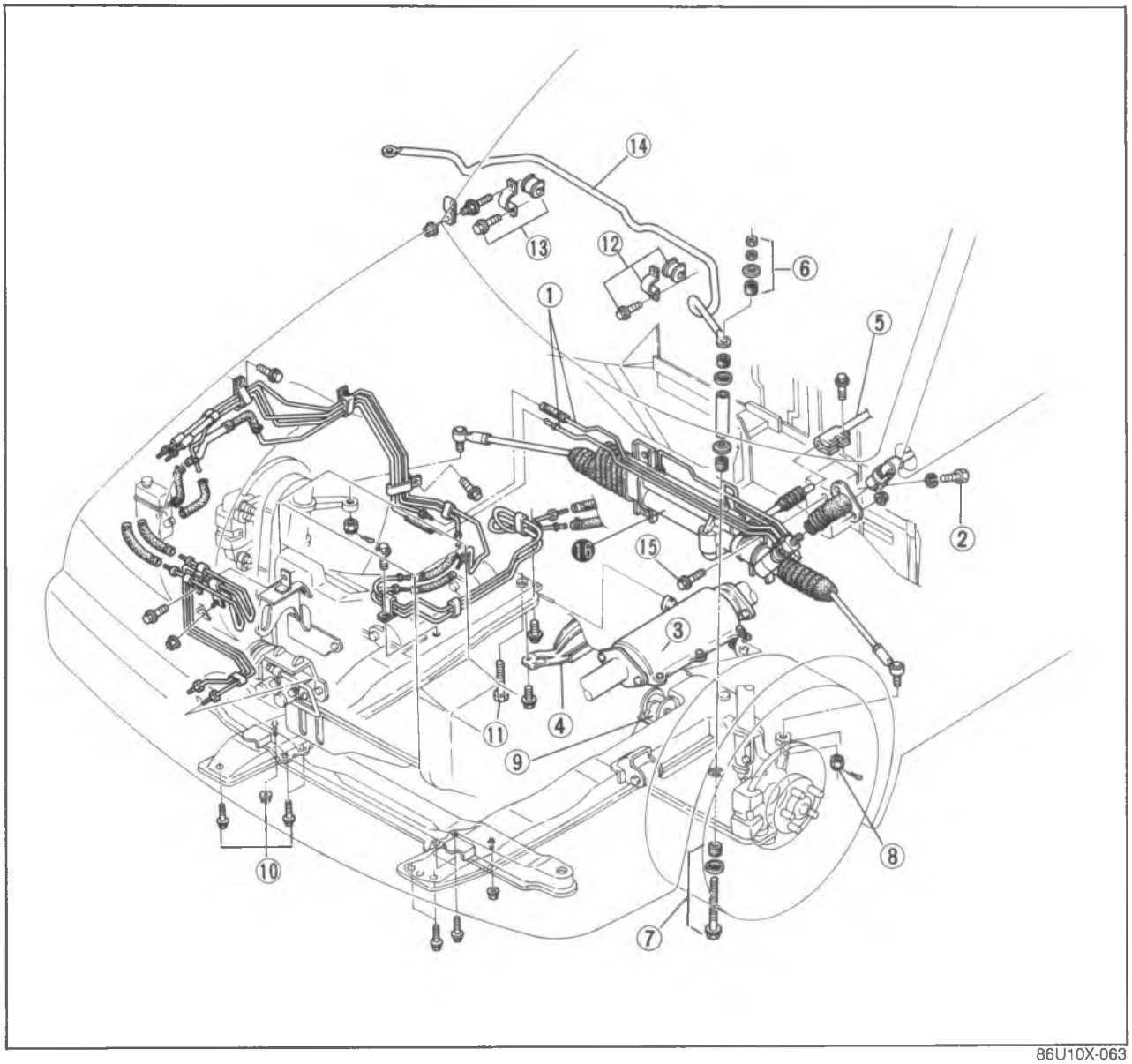

86U10X-063

1. Pipes
2. Bolt
3. Exhaust pipe
4. Under cover
5. Shaft (Refer to next page)
6. Nuts retainer and bushing
7. Bolt, retainer and bushing
8. Nuts
9. Engine mount
10. Bolts and nut
11. Bolt
12. Bolt and mounting
13. Bolts and mounting
14. Stabilizer
15. Bolt
16. Front steering gear assembly

Steering Angle Transfer Shaft

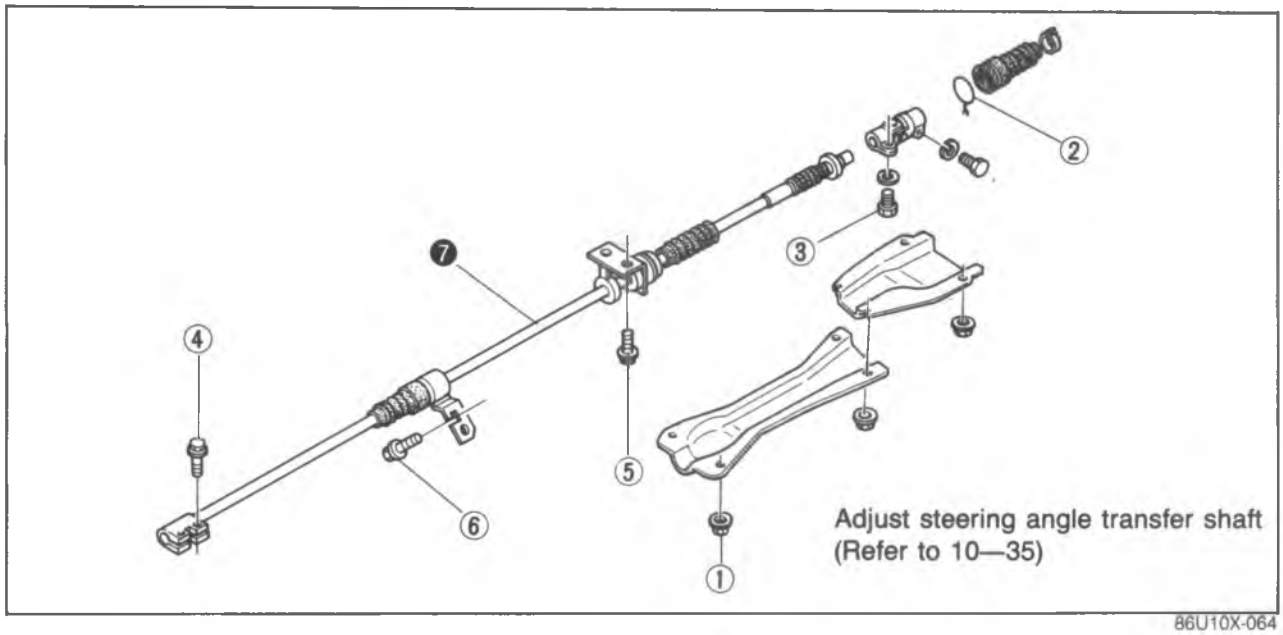

86U10X-064

1. Nut
2. Boot band
3. Bolt
4. Bolt
5. Bolt
6. Bolt
7. Steering angle transfer shaft

Rear Steering Gear

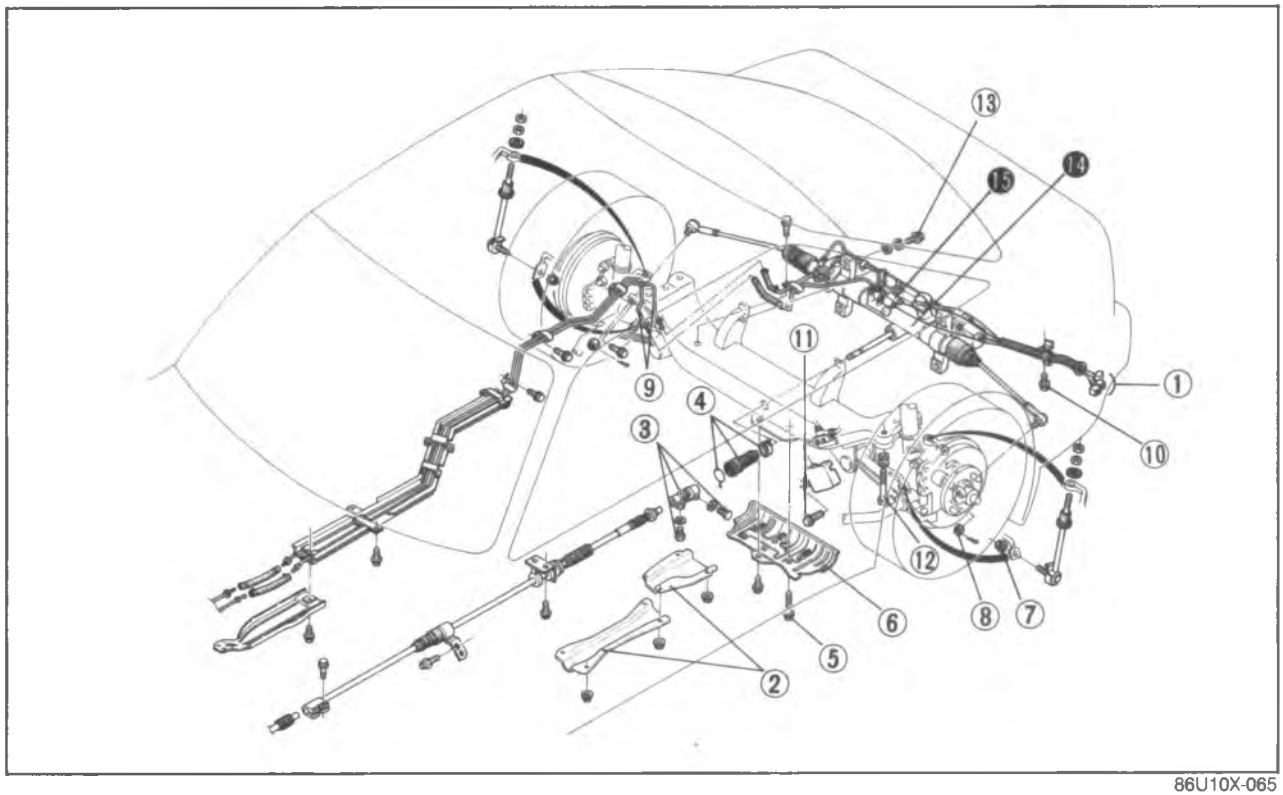

86U10X-065

1. Connector
2. Cover
3. Universal joint and bolts
4. Boot and boot band
5. Bolts
6. Cover
7. Nuts
8. Nuts
9. Pipes
10. Bolt
11. Bolt
12. Bolt
13. Bolt
14. Rear steering gear assembly
15. Solenoid valve

Torque Specifications

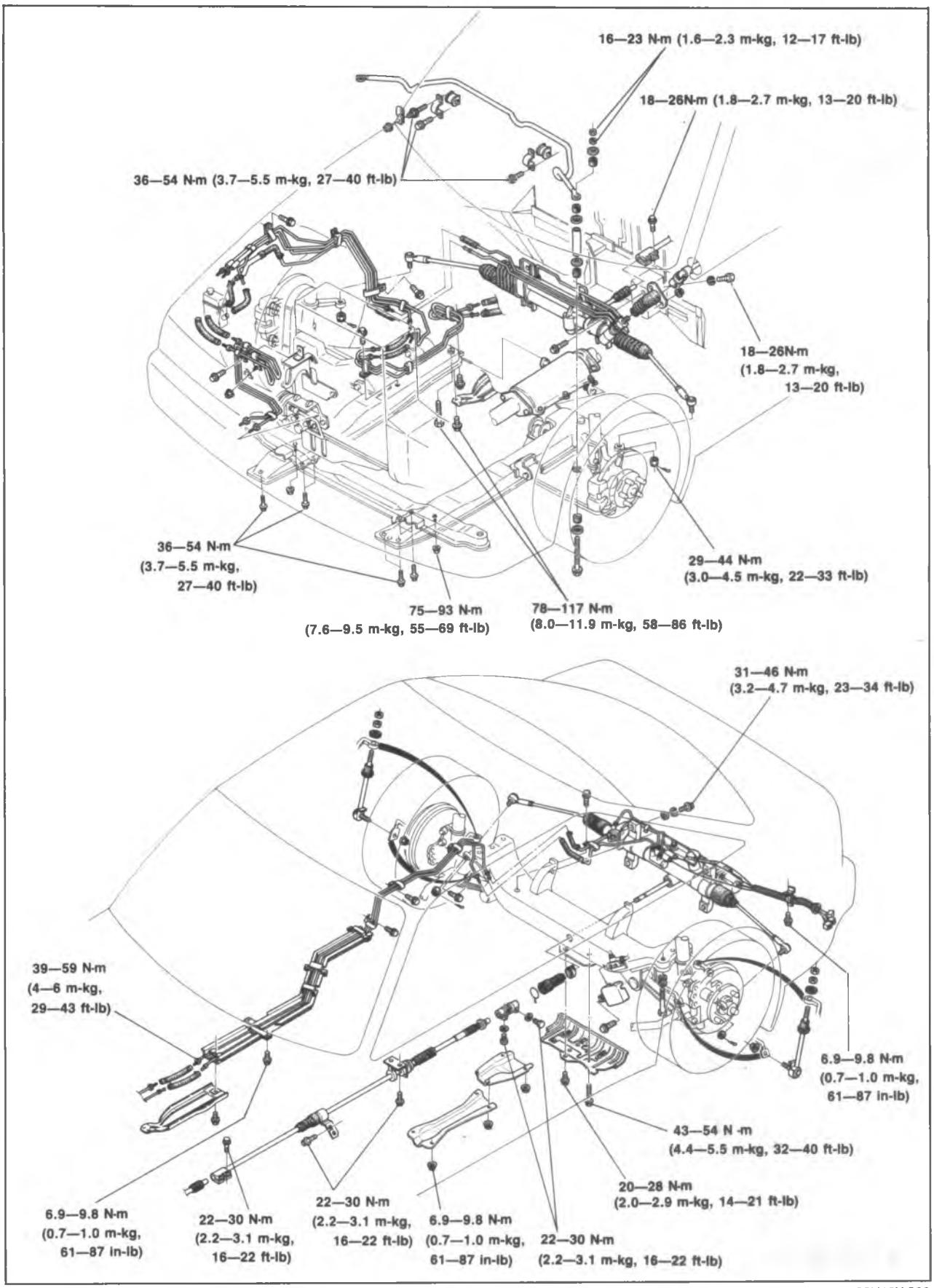

86U10X-066

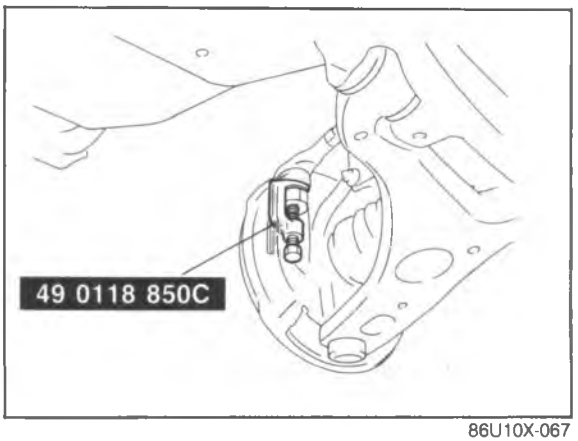

86U10X-067

Removal Note
Front steering gear

1. Disconnect the tie-rod ends from the knuckles with the **SST**.

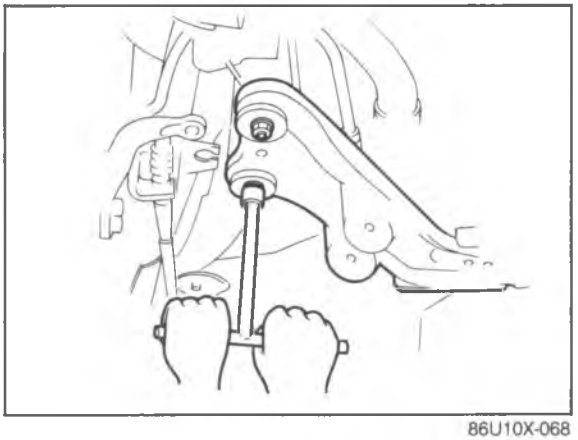

86U10X-068

2. Remove the mounting bolts and nuts from the body and crossmember. Let the lower members hang down.

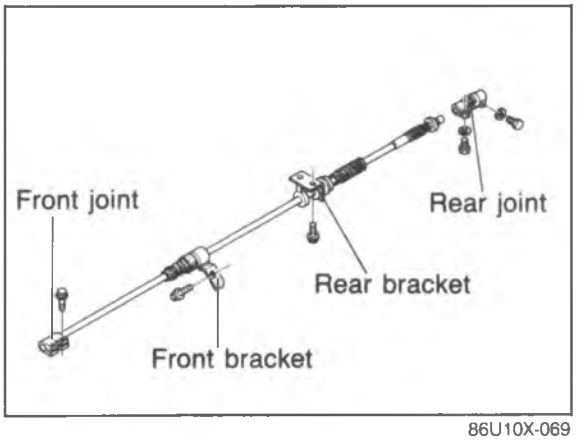

86U10X-069

Steering angle transfer shaft
Be careful not to bend the joints to extreme angles.

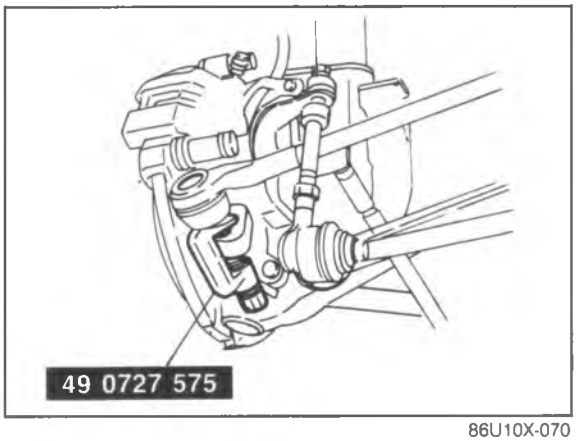

86U10X-070

Rear steering gear

1. Disconnect the tie-rod ends from the knuckles with the **SST**.

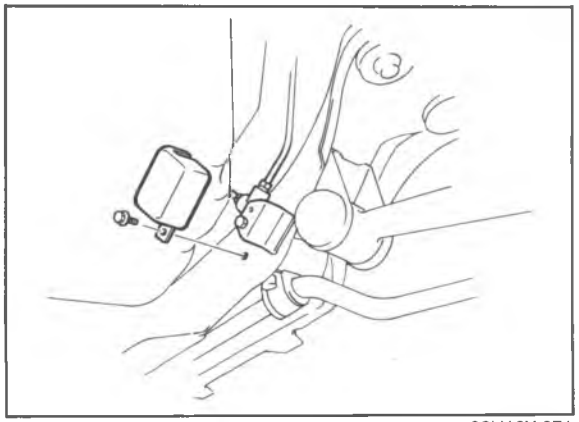

86U10X-071

2. Remove the cover and the brake pipe joint block.

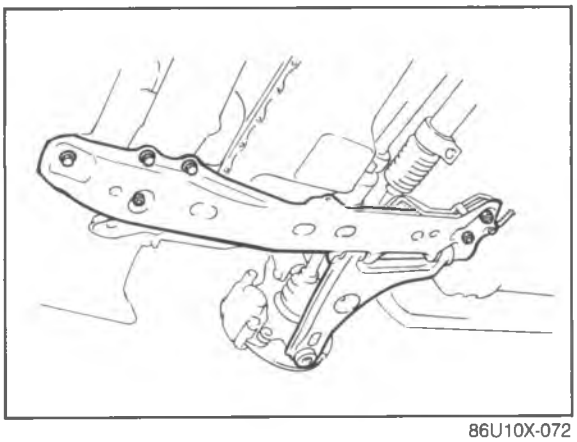

86U10X-072

3. Remove the mounting bolts and nuts from the left and right subframes.
4. Let the subframes hang down.

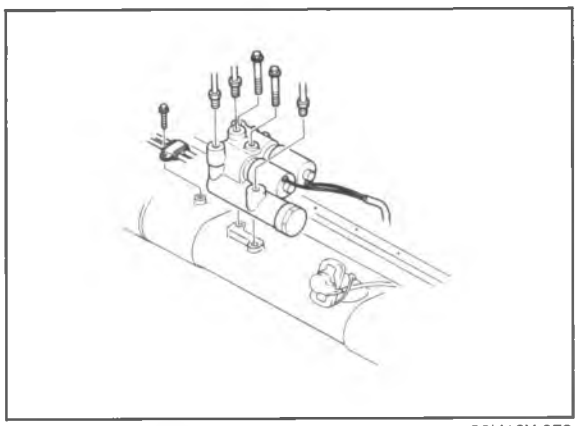

86U10X-073

Solenoid valves

1. Remove the oil pipes.
2. Remove the bolts.
3. Disconnect the solenoid valve connectors.
4. Remove the solenoid valve assembly.

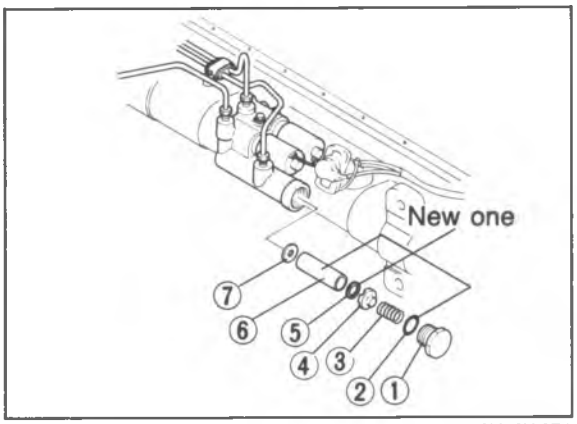

86U10X-074

Oil filter

Replace the oil filter in the sequence shown in the figure.

1. Filter cap
2. O-ring
3. Spring
4. Set plate
5. Rubber
6. Oil filter
7. Magnet

Note

Clean up and install the magnet and set plate.

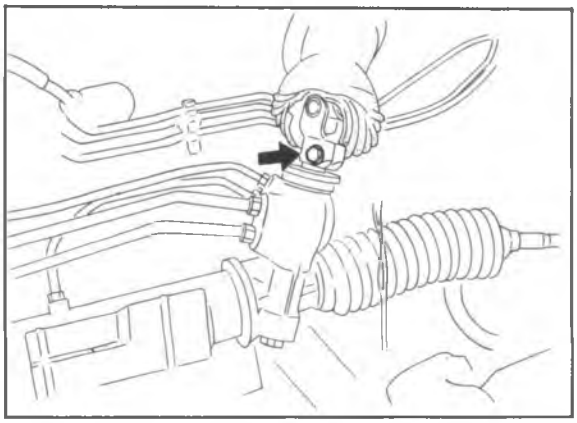

86U10X-075

Installation Note
Front steering gear
Tighten the universal joint to the pinion shaft.

Tightening torque:
18—26 N (1.8—2.7 m-kg, 13—20 ft-lb)

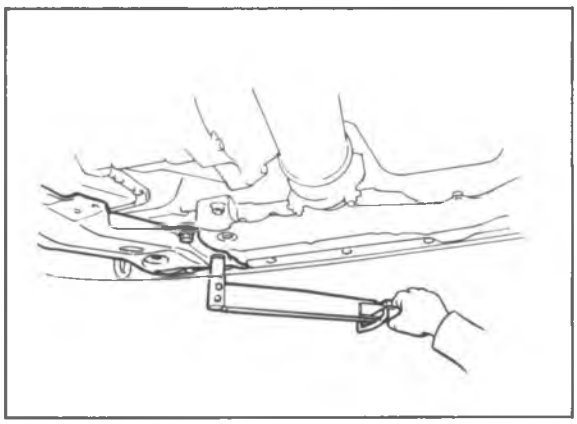

86U10X-076

Install the subframe.

Tightening torque:
36—54 N·m (3.7—5.5 m-kg, 27—40 ft-lb)

Adjust the rear turning angle. (Refer to Page 10—35.)

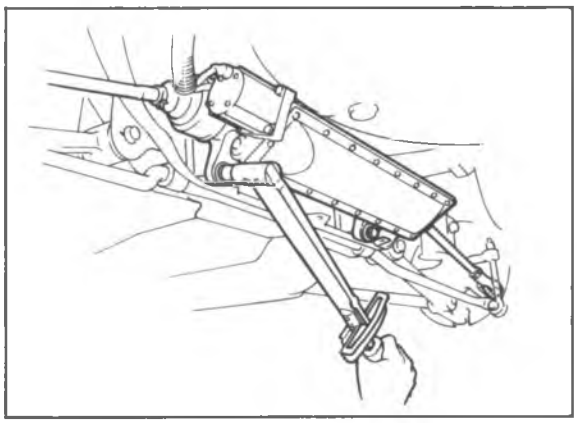

86U10X-077

Rear steering gear
Adjust the rear steering angle after installation of the rear steering gear. (Refer to Page 10—35.)

Note
When the replacement of rear steering gear or the oil pan gasket owing to the oil likage, add fluid to the specified level. (Refer to page 10—12)

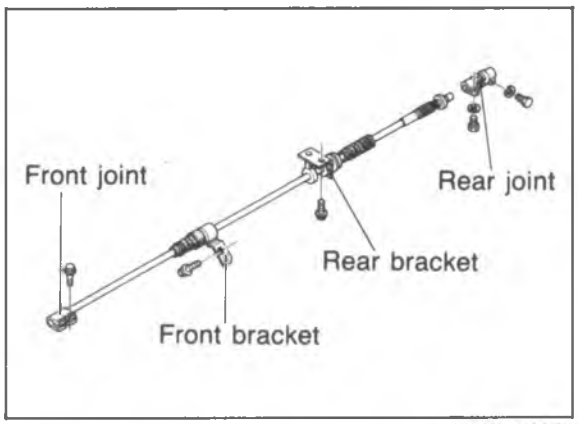

86U10X-078

Steering angle transfer shaft

Caution
Installation of the steering angle transfer shaft must be done correctly.
Work carefully, referring to the adjustment of steering angle transfer shaft (page 10—35).
If not installed correctly, the rear steering angle may be incorrect, causing steering problems or damage to the rear steering gear assembly.

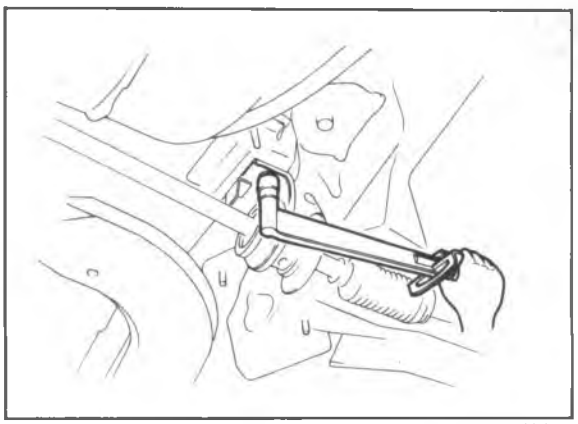

86U10X-319

1. Temporarily install the front bracket.
2. Install the rear bracket, and then tighten at the specified torque.

   Tightening torque:
   22—30 N·m (2.2—3.1 m-kg, 5.1—7.2 ft-lb)

3. Tighten the front brackets bolt.

   Tightening torque:
   22—30 N·m (2.2—3.1 m-kg, 5.1—7.2 ft-lb)

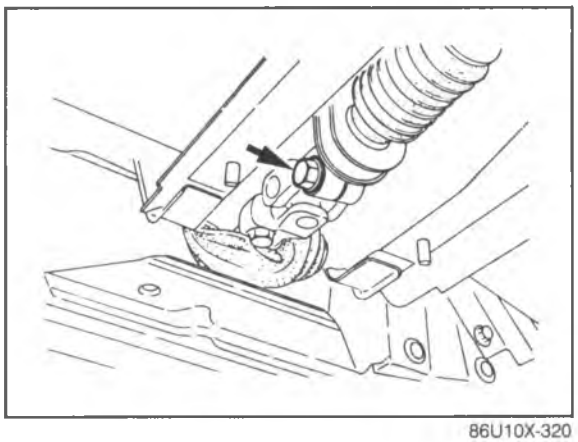

86U10X-320

Caution
The shaft should be installed by two or more persons, taking care not to bend the joint part.

4. Connect the joint of the front steering gear side, and then tighten the bolt.
5. Connect the joint of the rear steering gear side, and then tighen the bolt.

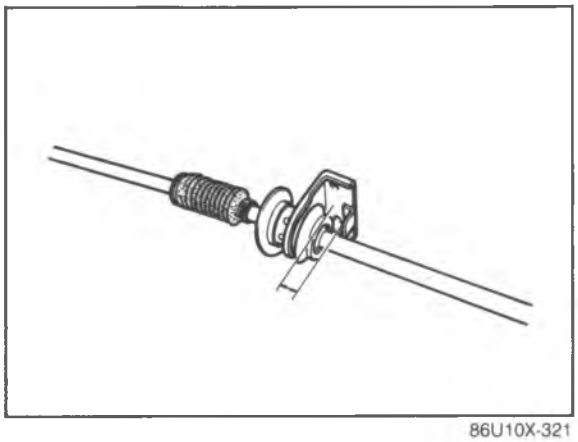

86U10X-321

Caution
Check to be sure that the front and rear brackets do not contact the oil seal.

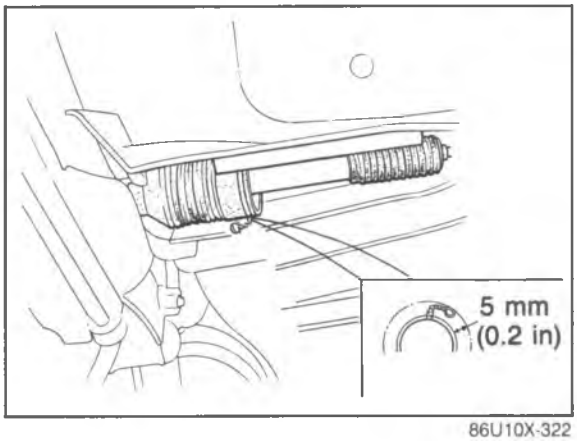

86U10X-322

6. Attach a new wire and clamp, and as shown in the illustration be sure that protrusion is within 5mm (0.2 in).
7. Install the cover.

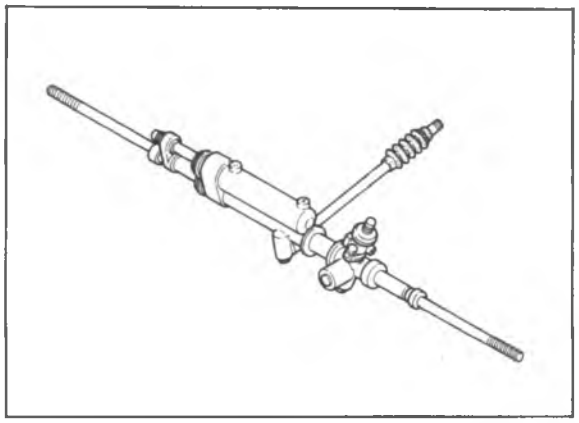

86U10X-079

INSPECTION

Front Steering Gear and Linkage

1. Check the following and replace the front steering gear assembly if necessary.
   (a) Damaged or cracked case
   (b) Bent linkage

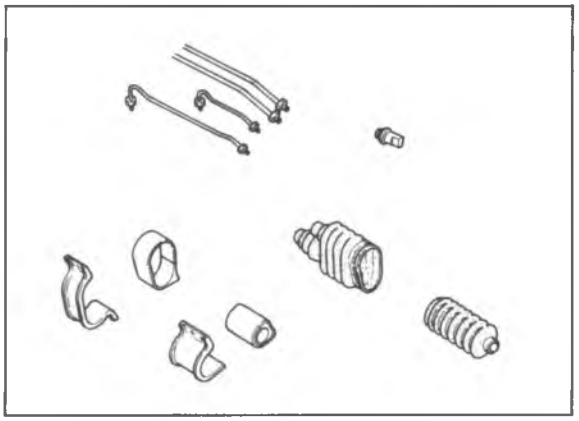

86U10X-080

2. Check the following and replace any faulty parts.
   (a) Clogged, bent, or pinched pipes
   (b) Faulty oil pressure switch
   (c) Damaged mounting bracket and mounting rubber
   (d) Cracked damaged, or deteriorated boots

Available spare parts

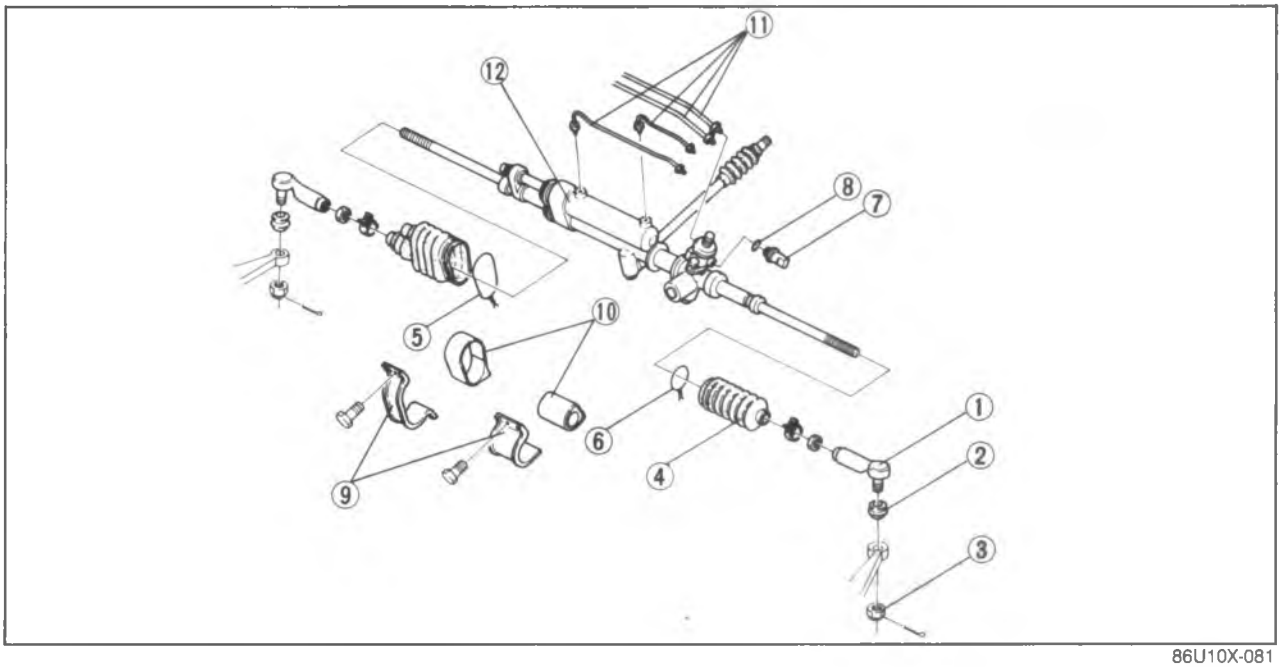

86U10X-081

1. Tie-rod end
2. Tie-rod end boot
3. Nut
4. Boot
5. Boot band (large)
6. Boot band (small)
7. Oil pressure switch
8. O-ring
9. Mounting bracket
10. Mounting rubber
11. Oil pipe
12. Steering gear assembly

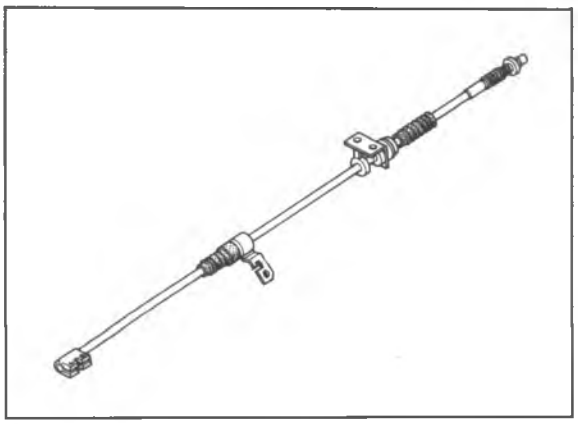

86U10X-082

Steering Angle Transfer Shaft

Check the following and replace the shaft assembly if necessary

1. Shaft
   (a) Cracked, damaged, or deteriorated boots
   (b) Stuck carrier bearing
   (c) Bent
   (d) Damaged mounting brackets

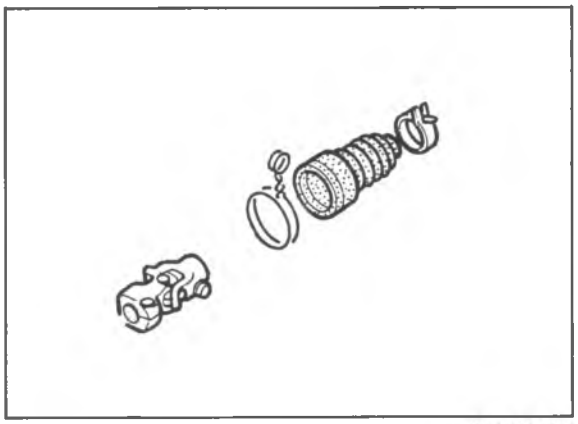

86U10X-083

2. Universal joint
   Looseness or damage
3. Rear boot
   Cracked, damaged or deteriorated

Available spare parts

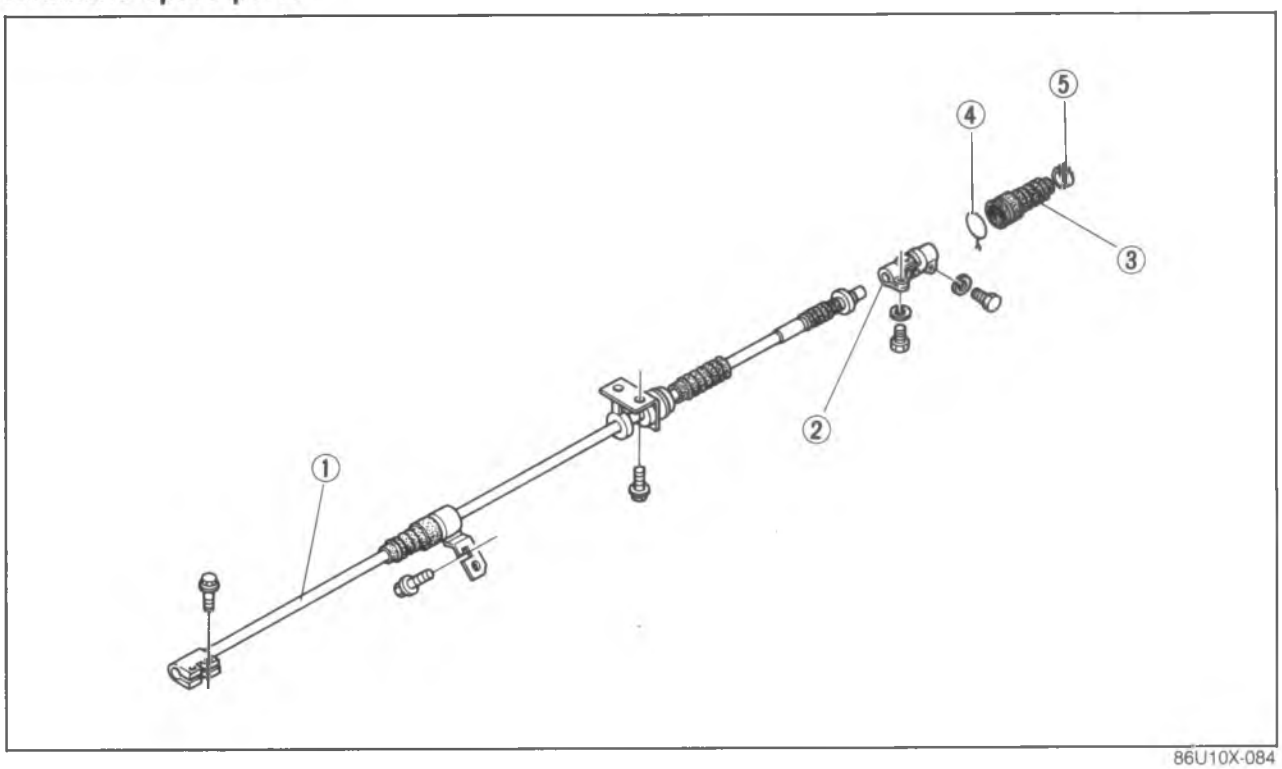

86U10X-084

1. Shaft
2. Universal joint
3. Rear boot
4. Wire
5. Clip

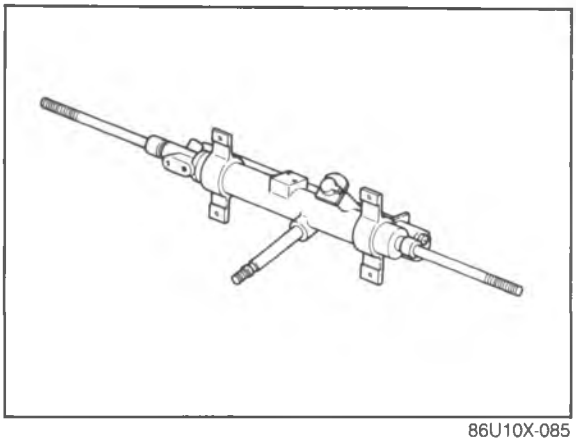

86U10X-085

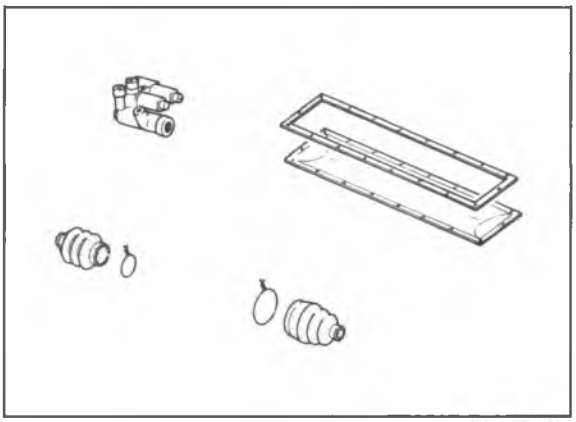

86U10X-086

Rear Steering Gear and Linkage

1. Check the following and replace the rear steering gear assembly if necessary.
   (a) Damaged or cracked case
   (b) Faulty stepper motor or rear-to-front steering ratio sensor
   (c) Sticking bearings
   (d) Oil leakage

   Note
   There is no fluid in a new replacement rear steering gear assembly, add fluid to the specified level. (Refer to 10—12.)

2. Check and tighten bolts and nuts, if necessary.

3. Check the following and replace any faulty parts.
   (a) Cracked, damaged, or deteriorated rear steering gear boots and bands
   (b) Cracked or damaged oil pan
   (c) Malfunctioning solenoid valve

Available spare parts

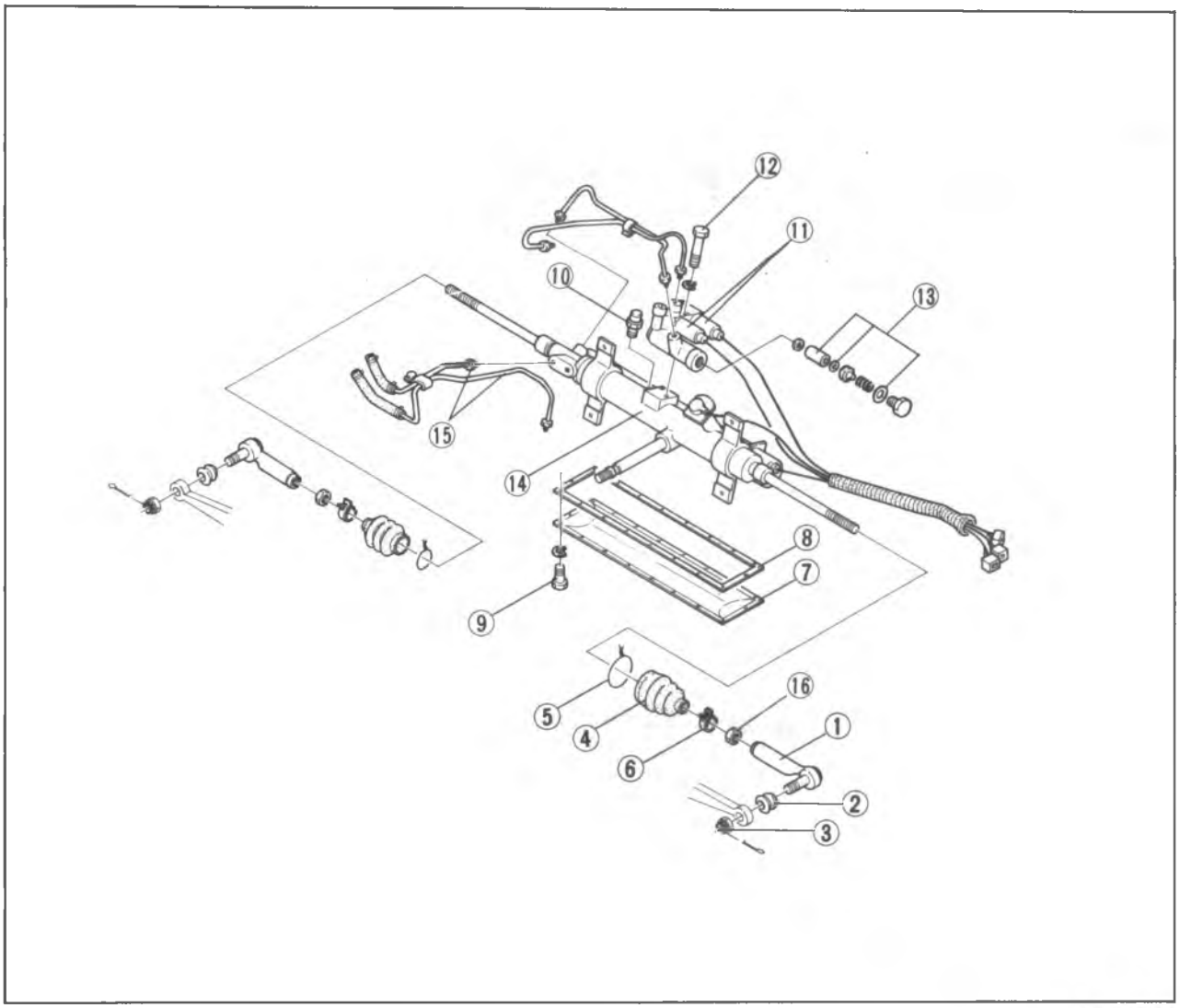

86U10X-087

1. Tie-rod end
2. Tie-rod end boot
3. Nut
4. Boot
5. Boot band (wire)
6. Boot band (clip)
7. Oil pan
8. Oil pan gasket
9. Bolt
10. Oil filler bolt
11. Solenoid valve (Refer to 10—41)
12. Bolt
13. Oil filter set (Refer to 10—41)
14. Steering gear assembly
15. Pipe
16. Nut

MANUAL STEERING

DISASSEMBLY

Disassemble in the sequence shown in the figure, referring to the disassembly note for specialy marked parts.

Note
Before disassembling, drain the gear oil and remove all external grease and dirt.

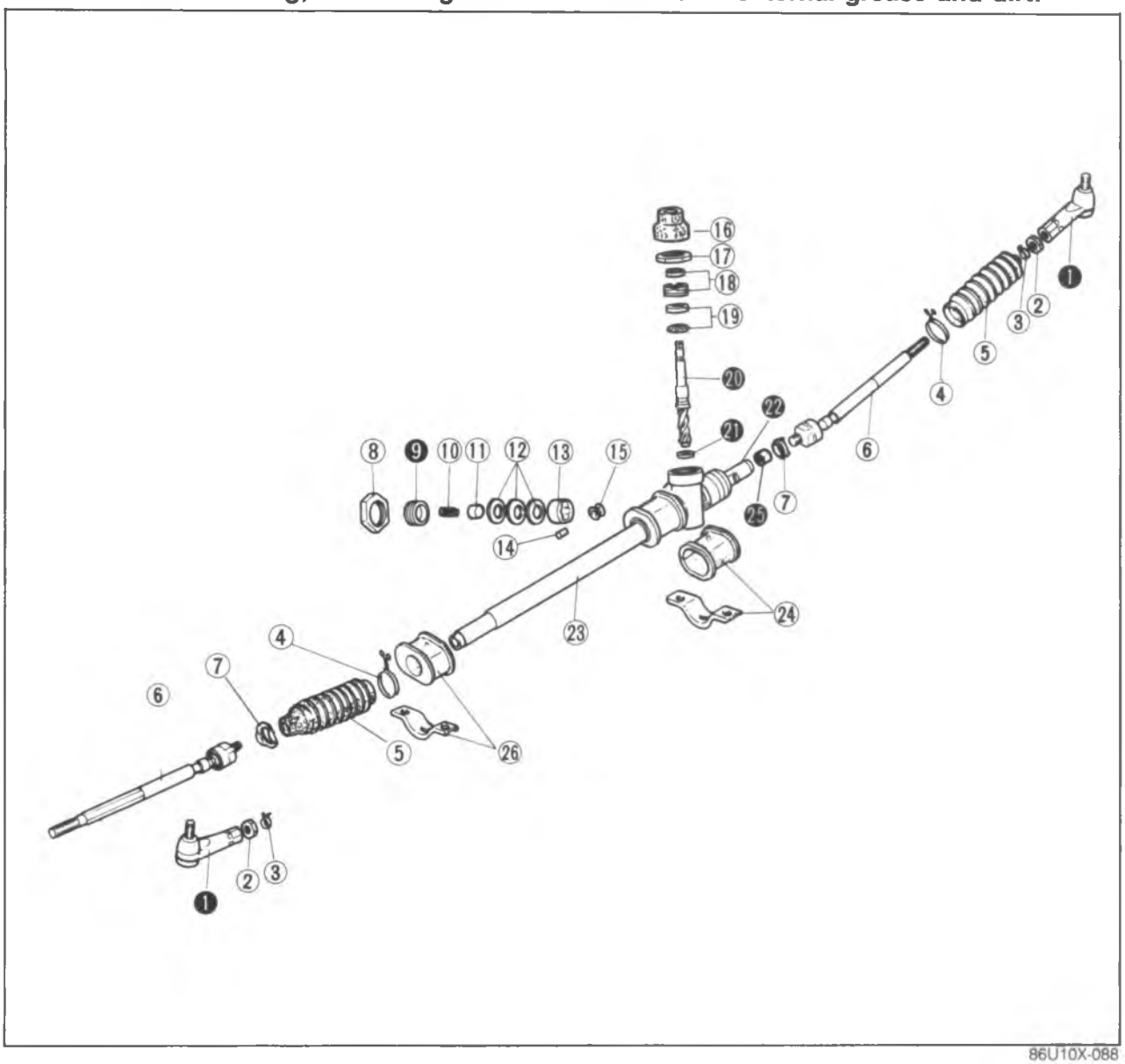

1. Tie-rod end
2. Nut
3. Clip
4. Boot wire
5. Boot
6. Tie-rod
7. Washer
8. Adjust cover locknut
9. Adjust cover
10. Spring
11. Friction block
12. Dish spring
13. Holder
14. Needle roller
15. Roller assembly
16. Boot support
17. Rear cover locknut
18. Rear cover and oil seal
19. Bearing
20. Pinion
21. Bearing
22. Rack
23. Gear housing
24. Mounting rubber and bracket
25. Bushing

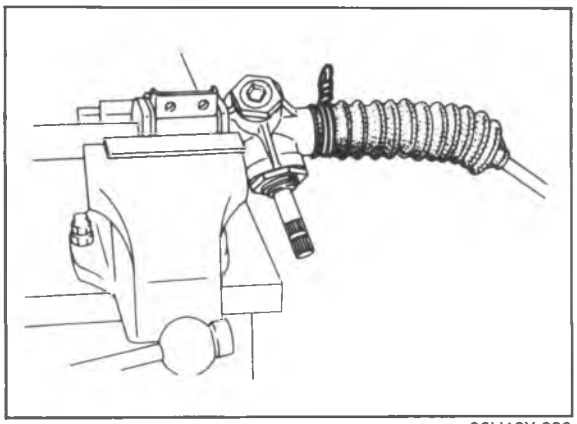

86U10X-089

Disassembly Note
Steering gear and linkage
Secure the gear and linkage in a vise.

Caution
Insert protective material (such as copper plates) in the jaws of the vise.

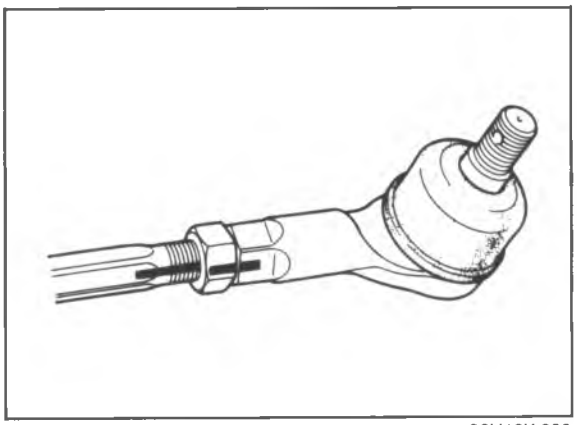

86U10X-090

Tie-rod ends
Before removing the tie-rod ends, make a mark for proper installation.

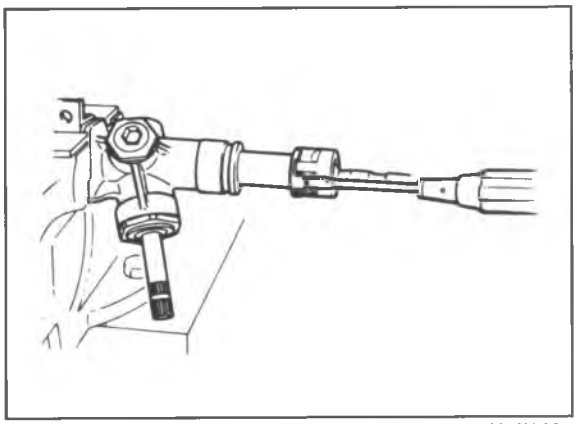

86U10X-091

Tie-rods
Remove the tie-rods.

1. Uncrimp the washer as shown in the figure.

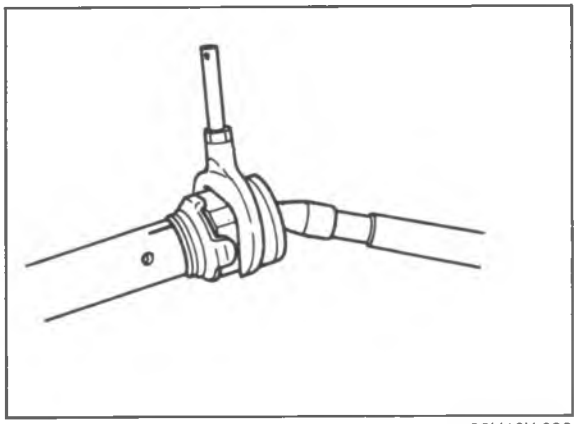

86U10X-092

2. Secure the rack in a vise and remove the tie-rod.

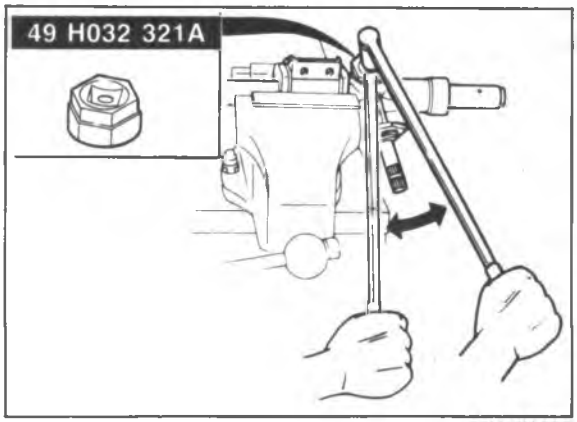

86U10X-093

Adjust cover

1. Loosen the locknut, and remove the adjust cover with the **SST**.
2. Remove the spring, friction block, dish springs holder, and needle roller assembly.

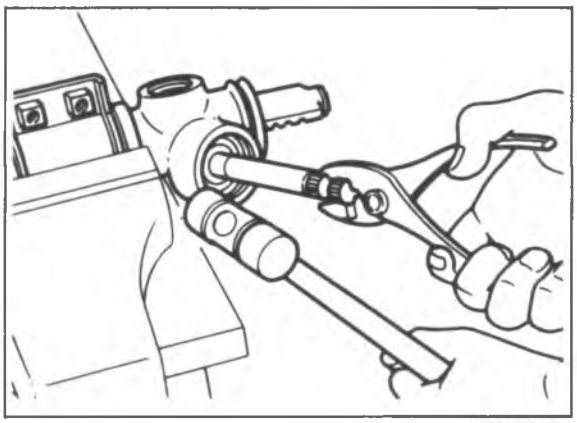
86U10X-094

Pinion

Gently grasp the serrated part of the pinion and pull it out of the gear housing.

Caution
If the pinion is difficult to remove, gently tap the gear housing with a plastic hammer while pulling.

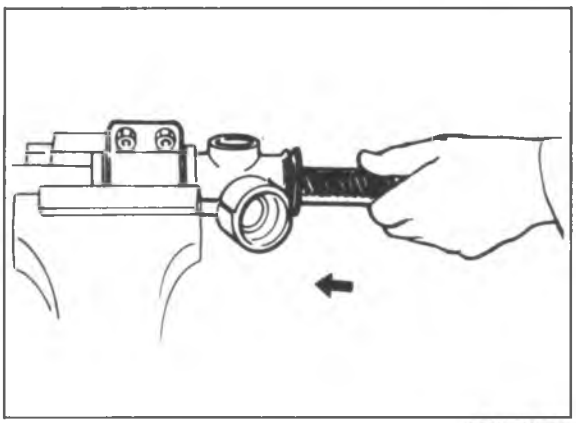
86U10X-095

Rack

Remove the rack by taking it out in the direction indicated by the arrow.

Caution
Do not damage the rack bushing with the edge of the rack gear.

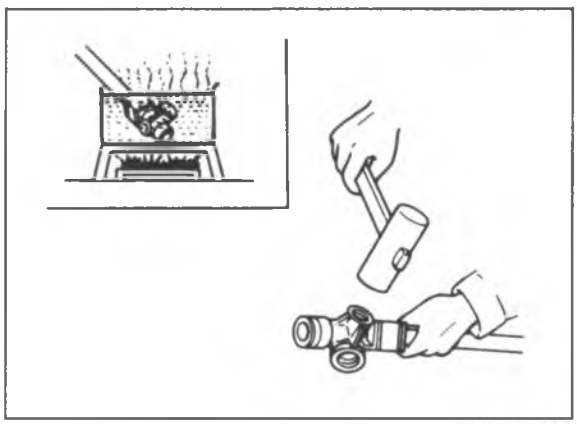
86U10X-096

Bearing (lower)

Heat the housing in water to about 80°C (176°F); then tap the end of the housing with a wooden hammer to remove the bearing.

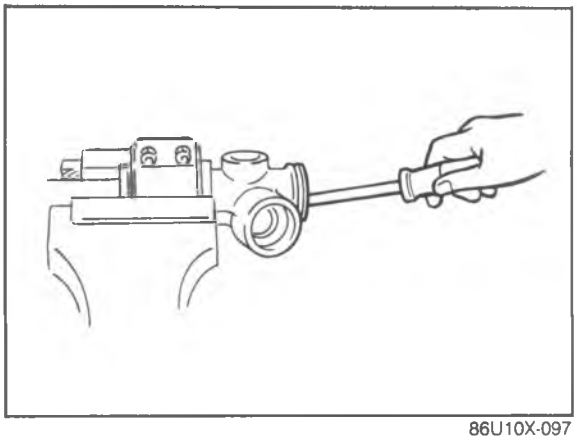

86U10X-097

Bushing
Break the bushing and remove it.

Caution
Be careful not to damage the gear housing.

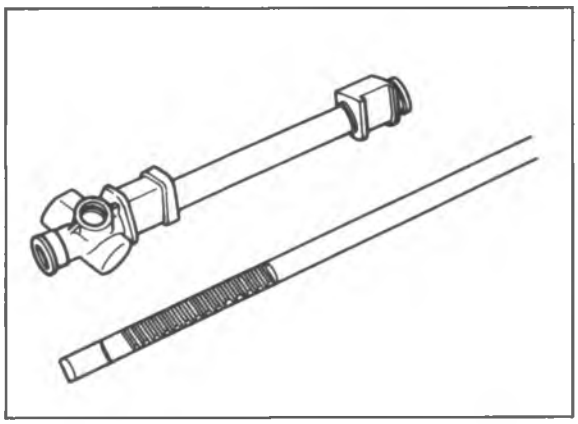

86U10X-098

INSPECTION
Check the following and replace any faulty parts.
1. Damaged mounting rubber or bracket
2. Cracked, worn teeth, or damaged pinion
3. Loose, noisy, or sticking bearing in gear housing
4. Cracked or damaged gear housing
5. Worn rack and housing bushing
6. Tie-rod ball-joint operation and looseness
7. Bent tie-rods or tie-rod ends

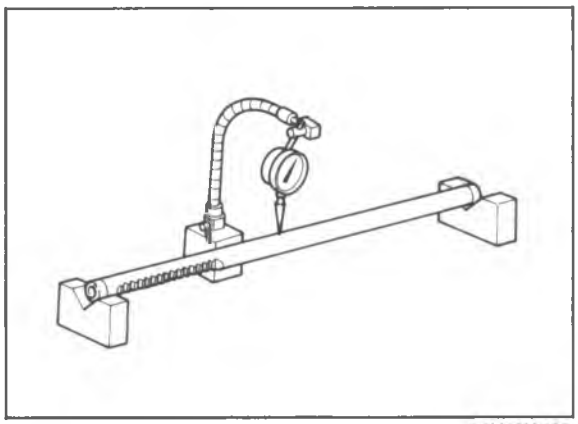

86U10X-099

8. Cracked, worn teeth, or damaged rack
9. Runout of rack

Runout: 0.30 mm (0.012 in) max.

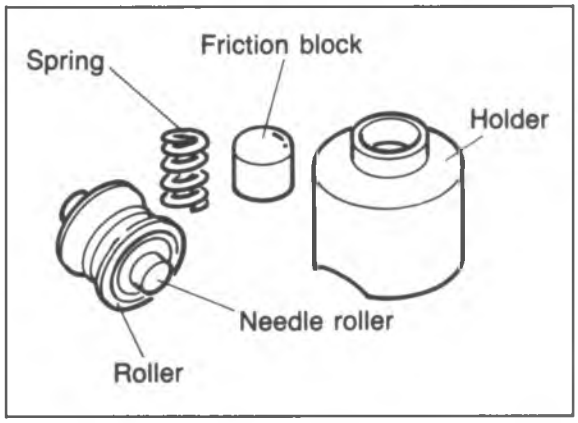

86U10X-100

10. Worn or damaged of roller and friction block
11. Bearing operation
12. Cracked or damaged holder
13. Weak or damaged spring

Note
If the needle bearing must be replaced, replace the roller assembly.

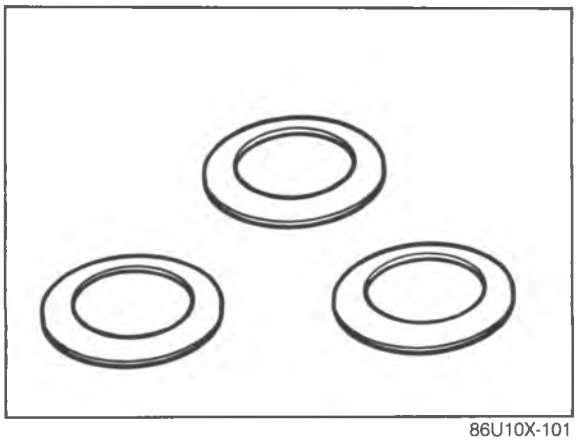

86U10X-101

14. Damaged dish springs

ASSEMBLY

Torque Specifications

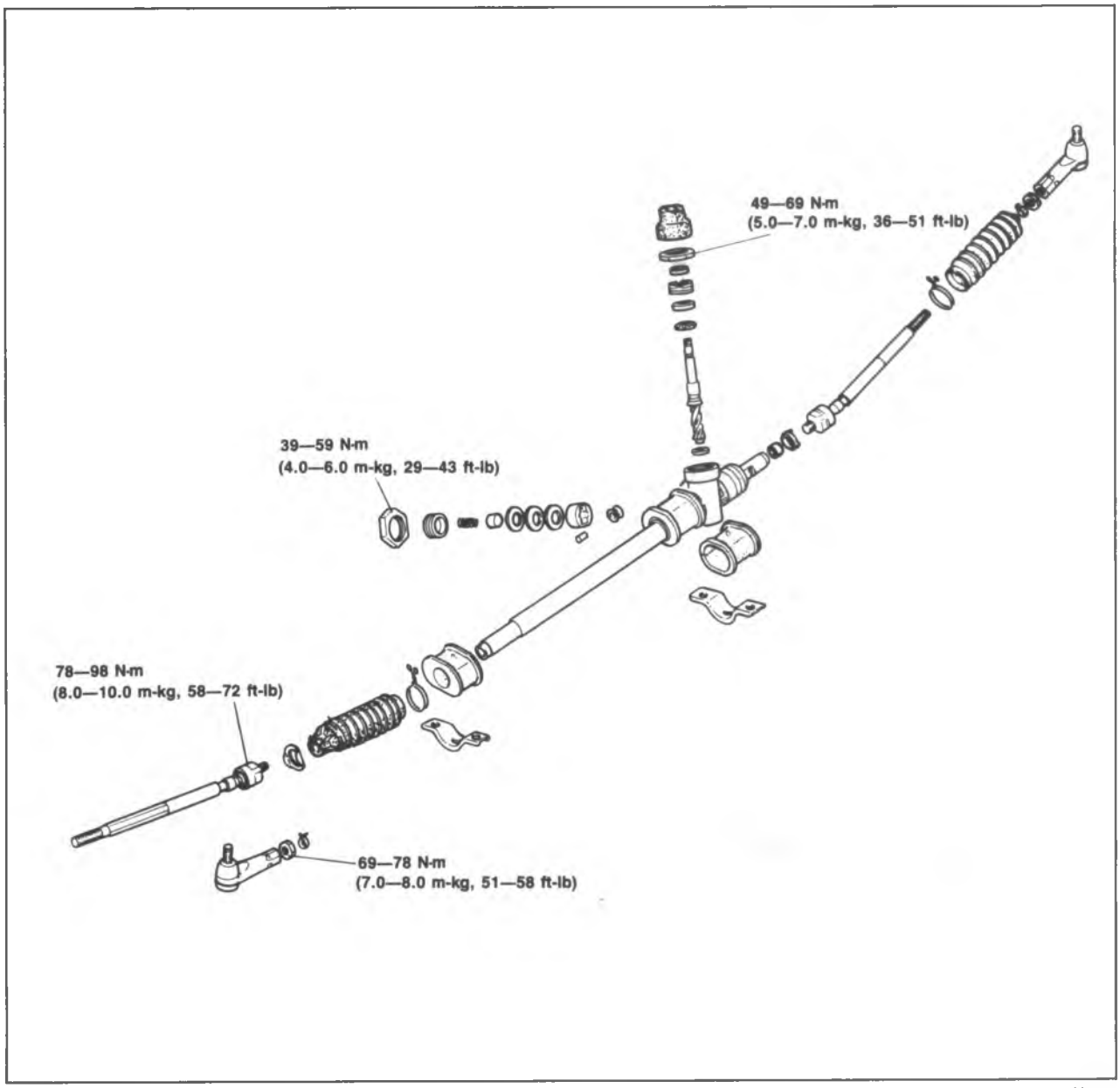

86U10X-102

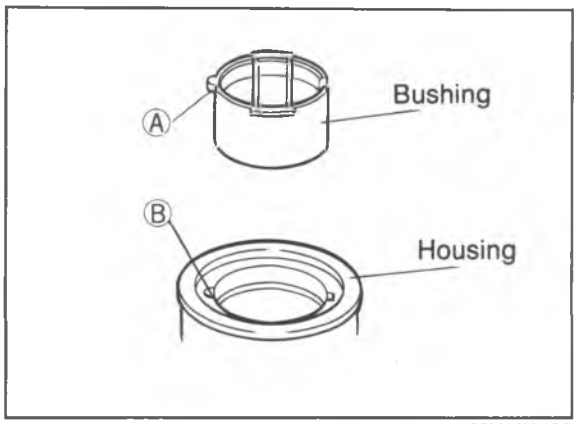

86U10X-103

1. Install the mounting rubber and bracket.
2. Install the bushing.
   Align A with B and press the bushing into the gear housing until it is fully seated.

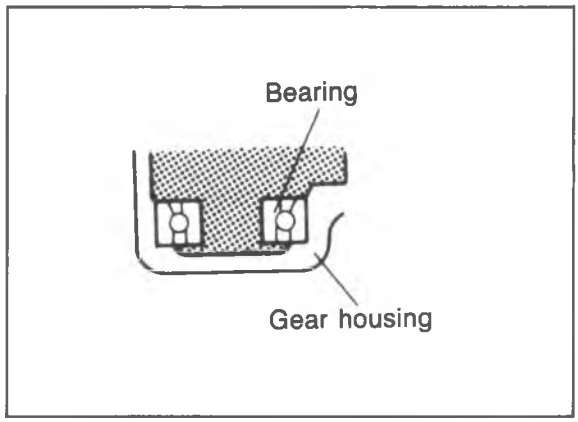

86U10X-104

3. Press in the lower bearing.

Caution
a) Before pressing in, put grease (lithium base, NLGI No. 2) in the bearing and bearing bore.
b) Install the bearing in the proper direction.
c) Use the pinion to press the bearing in.

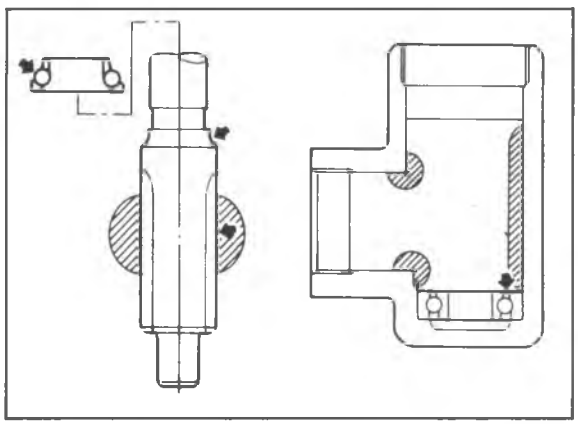

86U10X-105

4. Fill or coat the following points with grease (lithium base, NLGI No. 2) before assembly.
   a) Pinion bearing and teeth
   b) Inside gear housing

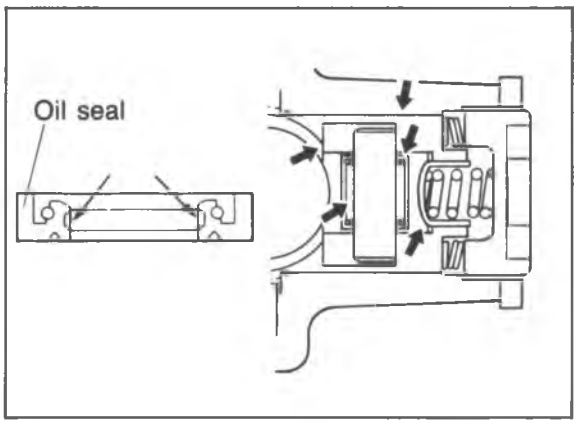

69G10X-106

c) Oil seal lip
d) Roller surface
e) Holder
f) Friction block surface

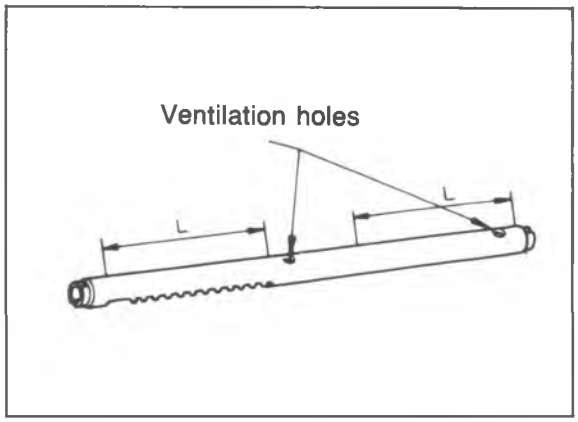

86U10X-107

g) Inner surface of housing rack bushing
h) Rack gear and outer circumference of rack shaft
L = 180 mm (7.09 in)
i) Tie-rod ball-joint
j) Inside left and right boots

Caution
Be careful not to fill the ventilation holes in the rack shaft with grease.

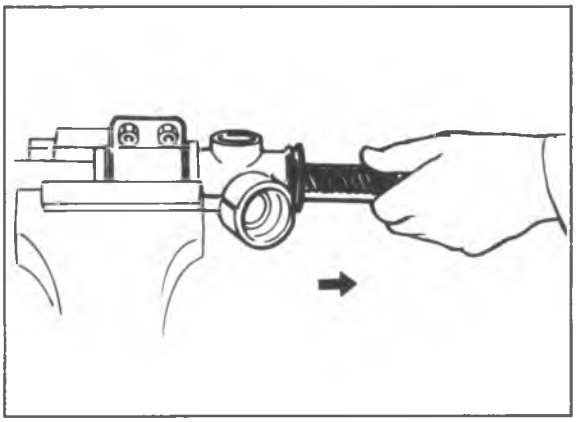

86U10X-108

5. Carefully install the rack in the direction of the arrow.

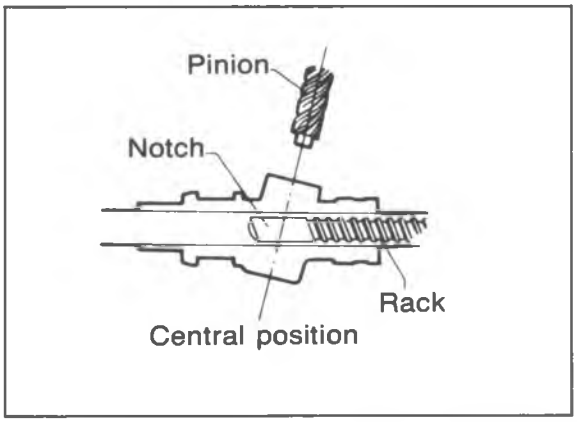

86U10X-109

6. Set the notch of the teeth of the rack at the pinion position, then insert the pinion.

Caution
This notch is used for adjustment of the pinion bearing preload without the pinion engaged with the rack.

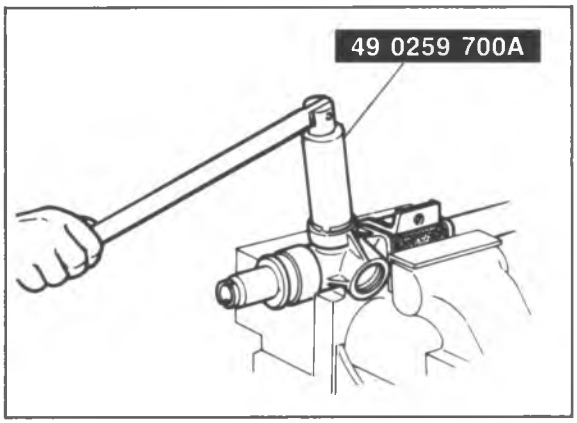

86U10X-110

7. Install the upper bearing, and then screw on the rear cover.

Caution
a) Apply sealant to the threads of the rear cover.
b) Do not install the oil seal.
c) Screw on the rear cover with the SST.

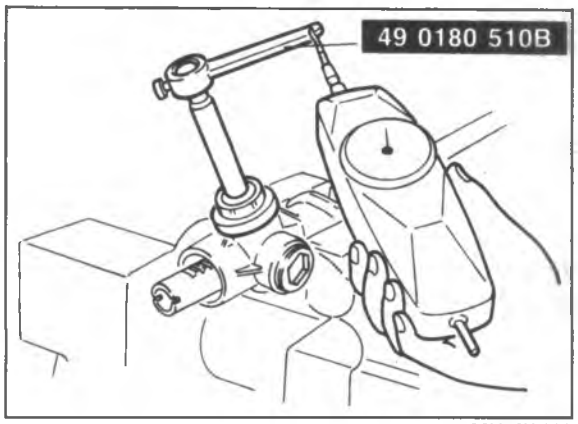

86U10X-111

8. Tighten the rear cover so that the torque of the pinion is approx **400 g (14.1 oz)**. Check with the **SST** and a pull gauge.

Caution
Before measuring the torque, rotate the pinion to the left and right a few times to seat the bearing.

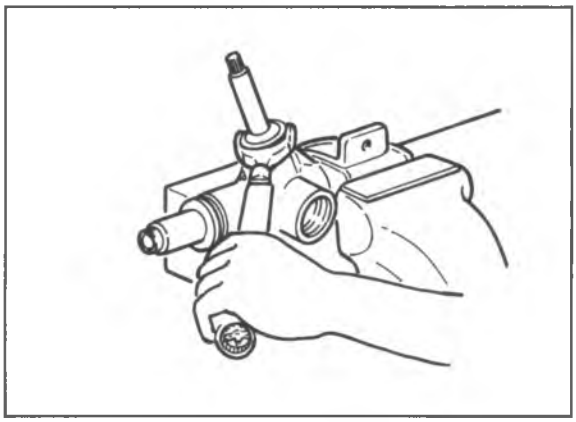

86U10X-112

9. Loosen the rear cover and readjust the pinion torque to **300 g (10.6 oz)**. Tighten the locknut.

Tightening torque:
49—69 N·m (5,0—7,0 m-kg, 36—51 ft-lb)

Caution
Recheck the pinion torque after tightening the locknut. If it is not within 200—350 g (7—12.3 oz), loosen the locknut and adjust once again.

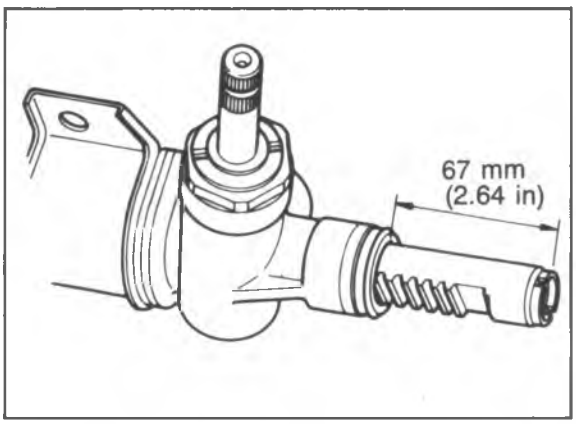

86U10X-113

10. Carefully move the rack so that the pinion is set to the center (neutral position) of the rack gear.

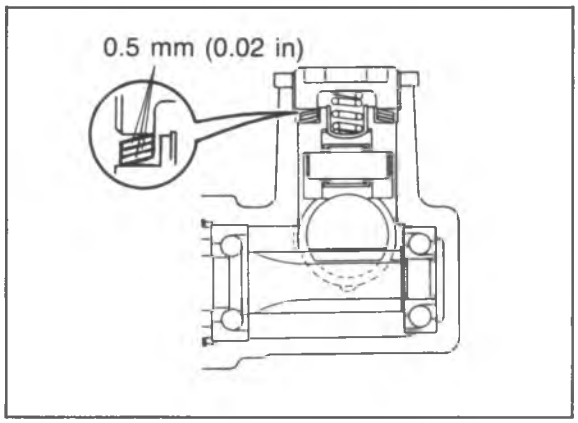

86U10X-114

11. Install the roller assembly, needle roller, holder, dish springs, friction block, and spring.

Caution
Install the roller bearing so that it correctly contacts the rack.

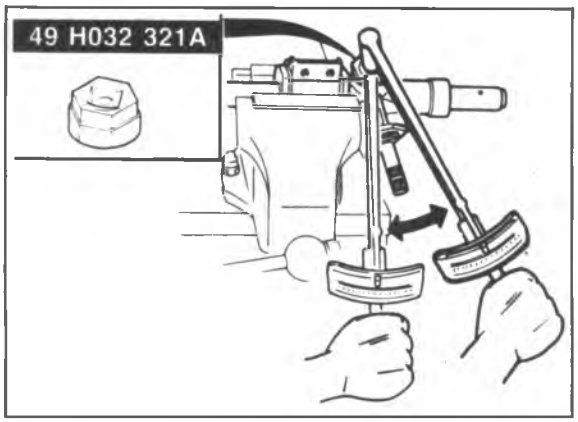

86U10X-115

12. Torque the adjust cover to **9.8 N·m (1 m-kg, 7.2 ft-lb)**, then loosen it 25°—45°. Secure the adjust cover with the locknut and the **SST**.

    Locknut tightening torque:
    39—59 N·m (4.0—6.0 m·kg, 29—43 ft-lb)

    Note
    Apply sealant to the threads of the adjust cover before installing.

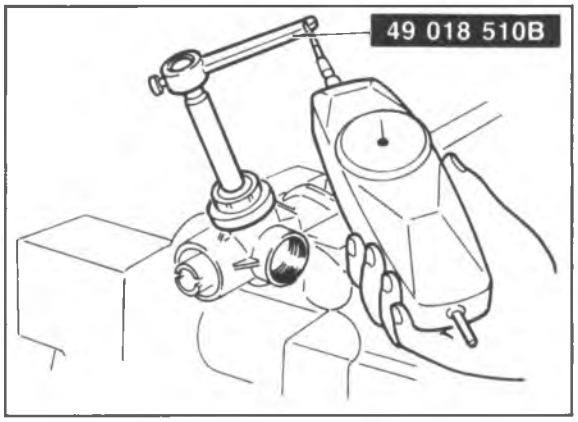

86U10X-116

13. Measure the pinion torque with the **SST**.

    Center position ± 90°
    Pull gauge reading:
    1,000—1,400 g (35—50 oz)
    Any other position
    Pull gauge reading:
    less than 1,700 g (60 oz)

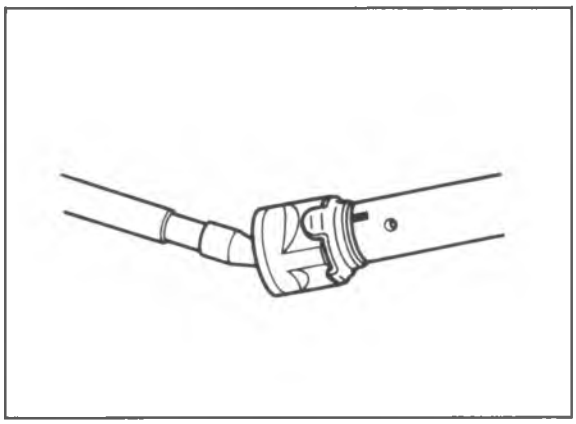

86U10X-117

14. Mark the positions of the rack grooves of the left tie-rod for staking.
15. Install the new washer on the left tie-rod, and install the tie-rod.

    Tightening torque:
    78—98 N·m (8.0—10.0 m-kg, 58—72 ft-lb)

16. Stake the washer in two places.

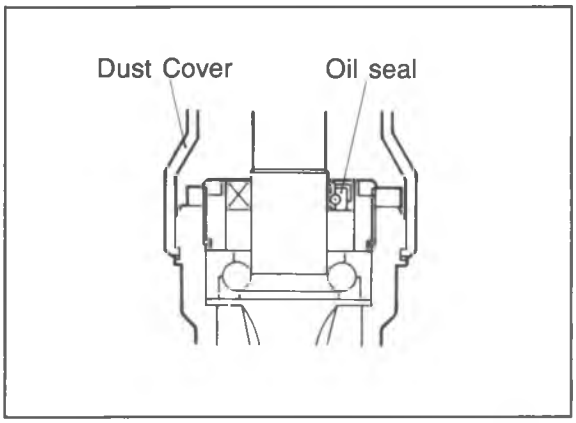

86U10X-118

17. Use a pipe to press in the oil seal until it is flush with the end of the rear cover.
18. Slide on the dust cover so that it fits into the pinion groove.
19. Press in the boot support. Be sure that it fits tightly.

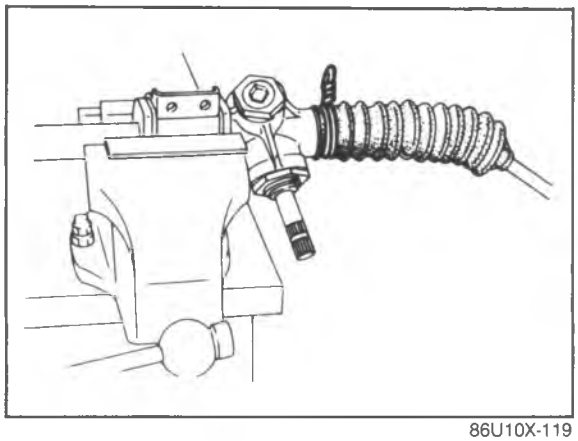

86U10X-119

20. Install the boot, then wrap a new wire around it two times and twist 4 to 4.5 times.
    Install the clip.

    Caution
    Check that the boot is not twisted or dented.

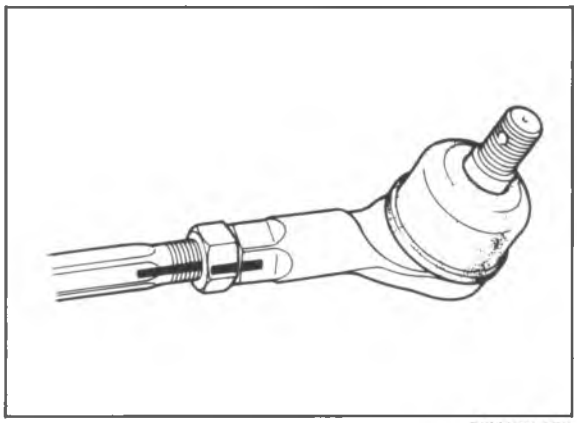

86U10X-120

21. Install the tie-rod ends, aligning them with the marks made before disassembly.

ENGINE SPEED SENSING POWER STEERING

DISASSEMBLY

Disassemble in the sequence shown in the figure, referring to the disassembly note for specially marked parts.

Caution

a) In order to prevent the entrance of dirt, all disassembly and assembly should be done in a clean area.

b) Before disassembly, plug the openings of all pipe installation fittings, then thoroughly clean the steering gear and linkage.

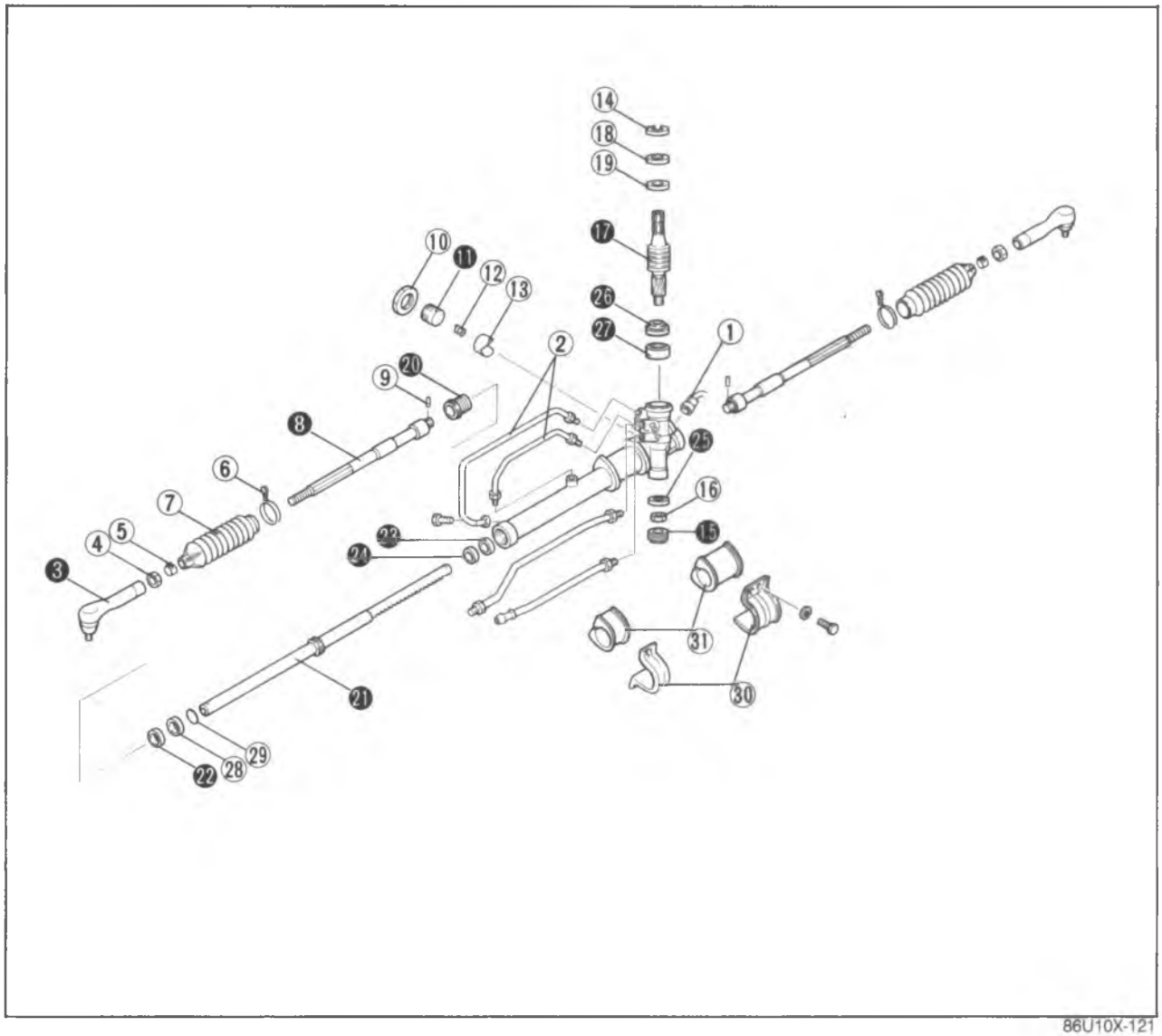

86U10X-121

1. Oil pressure switch
2. Oil pipe
3. Tie-rod end
4. Tie-rod end locknut
5. Spring clip
6. Boot wire
7. Boot
8. Tie-rod
9. Lock pin
10. Adjust cover locknut
11. Adjust cover
12. Spring
13. Pressure pad
14. Snap ring
15. Housing cover
16. Lower bearing locknut
17. Pinion shaft and control valve assembly
18. Oil seal
19. Upper bearing
20. Rack bushing assembly
21. Rack
22. Oil seal
23. Spacer
24. Oil seal
25. Lower bearing
26. Oil seal
27. Needle bearing
28. Seal ring
29. O-ring
30. Mounting bracket
31. Mounting rubber mount

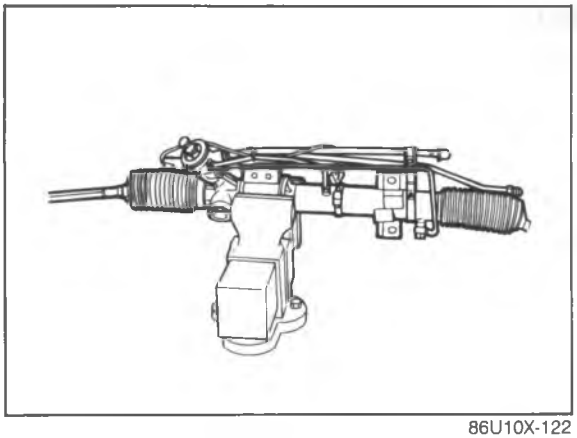

86U10X-122

Disassembly Note
Steering gear and linkage
Secure the gear and linkage in a vise.

Caution
Insert protective material (such as copper plates) in the jaws of the vise.

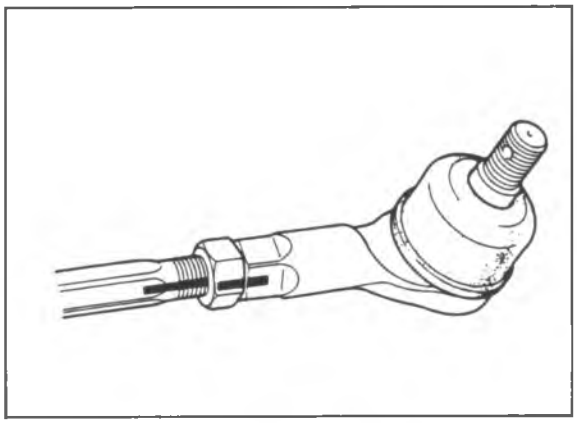

86U10X-123

Tie-rod ends
Before removing the tie-rod ends, make a mark for proper installation.

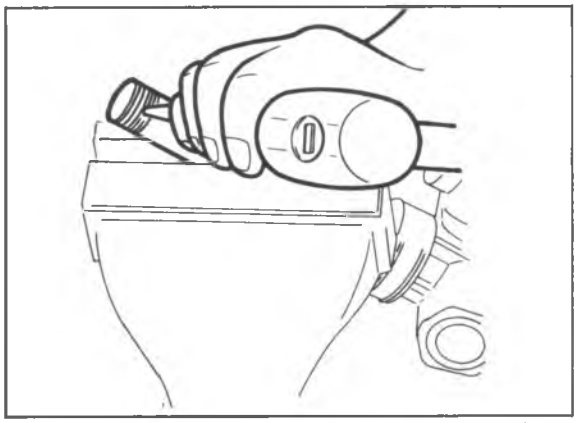

86U10X-124

Tie-rod
1. Remove the tie-rod from rack.
2. Remove the roll pin with a pin-punch and hammer.

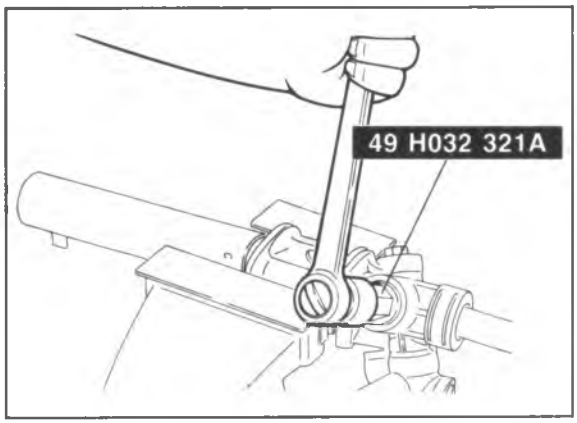

86U10X-125

Adjust cover
1. Remove the locknut from the adjust cover.
2. Remove the adjust cover with the **SST**.
3. Remove the spring and pressure pad.

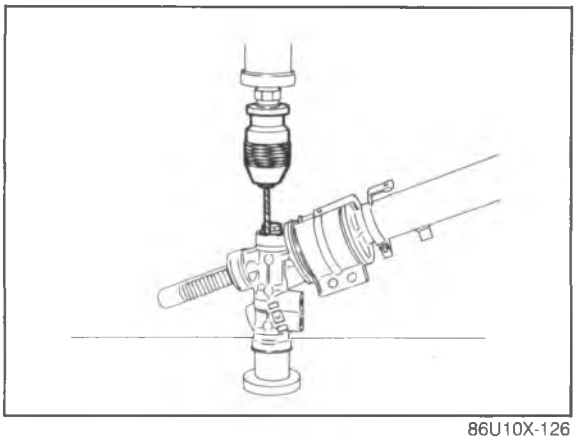

86U10X-126

Housing cover

1. Cut away the staked areas with a drill.
2. Remove the housing cover.

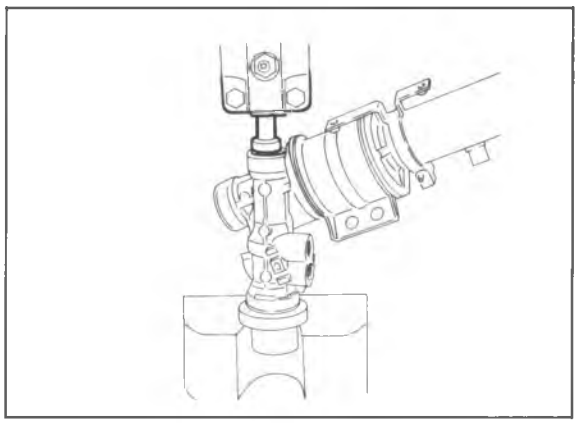

86U10X-127

Pinion shaft

1. Remove the locknut.
2. Set the gear housing assembly on a press and remove the pinion shaft assembly as shown in the figure.

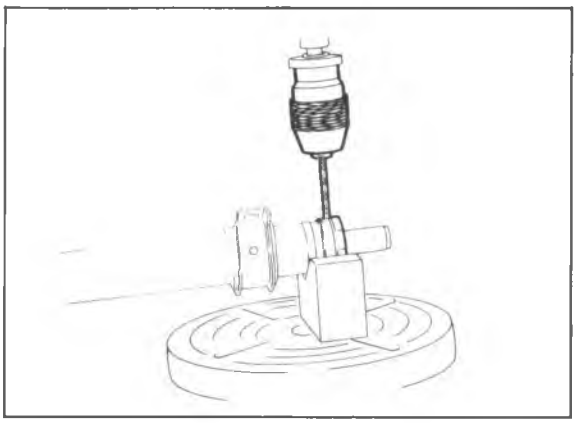

86U10X-128

Rack bushing

1. Cut away the staked areas with a drill.
2. Remove the rack bushing.

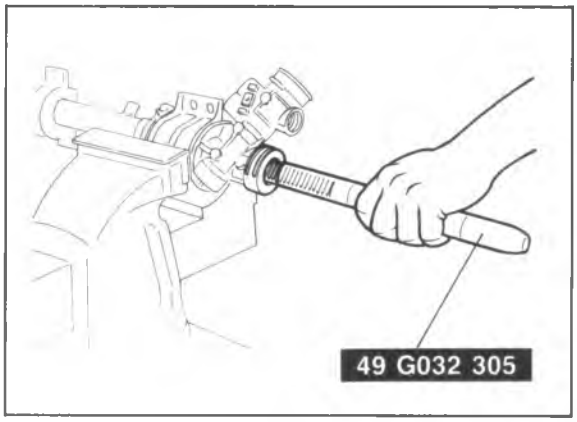

86U10X-129

Rack and oil seal at tube side

1. Slide the **SST** over the rack from the gear housing side.

Note
If the rack is removed without using the SST, there is the possibility that the rack housing may be damaged by the rack teeth.

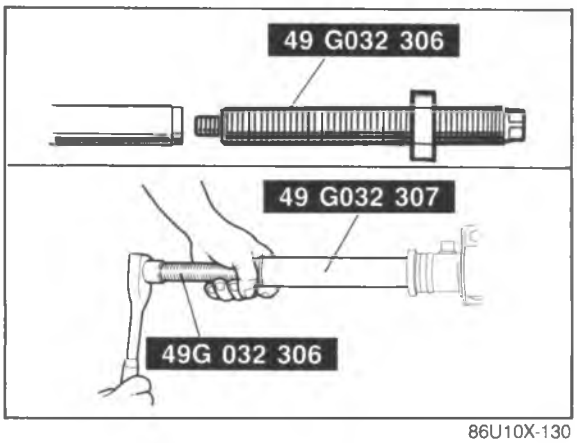

86U10X-130

2. Install the **SST** to the threaded part of the rack at the tube side.
3. Remove the oil seal at the tube side which pulling out the rack.

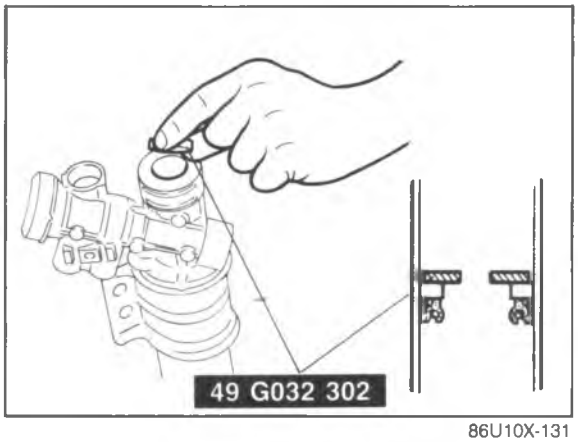

86U10X-131

Spacer and oil seal at housing side

1. Insert the **SST** from the pinion housing side so that it contacts the spacer.

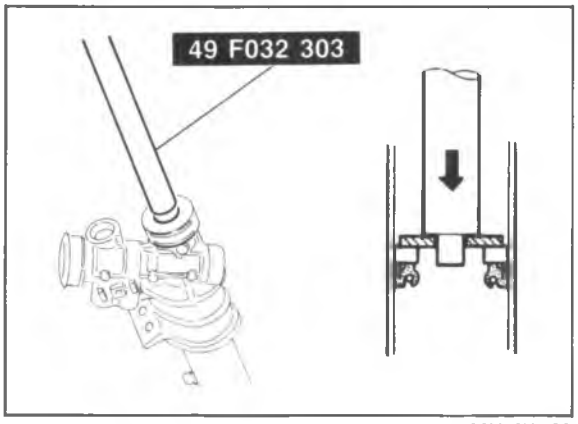

86U10X-132

2. Set the **SST** against the **SST** inserted in step 1.
3. Secure the gear housing in a vise.
4. Drive the spacer and oil seal out of the housing.

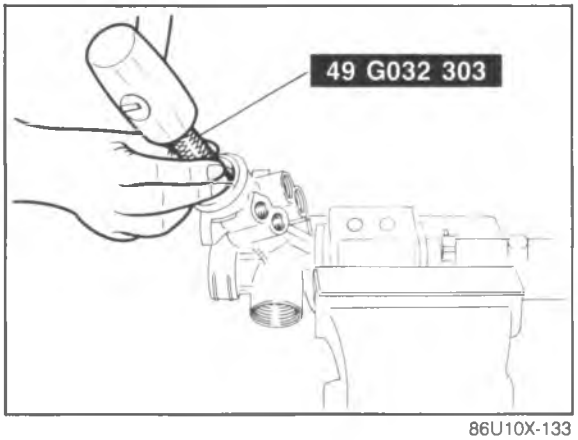

86U10X-133

Lower bearing

Drive the lower bearing out of the housing with the **SST**.

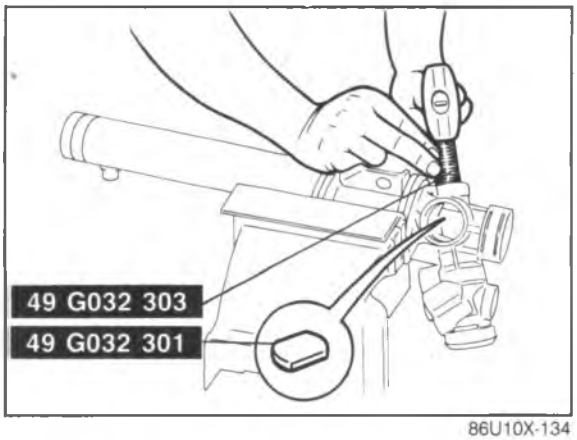

86U10X-134

Oil seal and needle bearing

1. Insert the **SST** so that it contacts the needle bearing.
2. Drive the oil seal and needle bearing out with the **SST** bar.

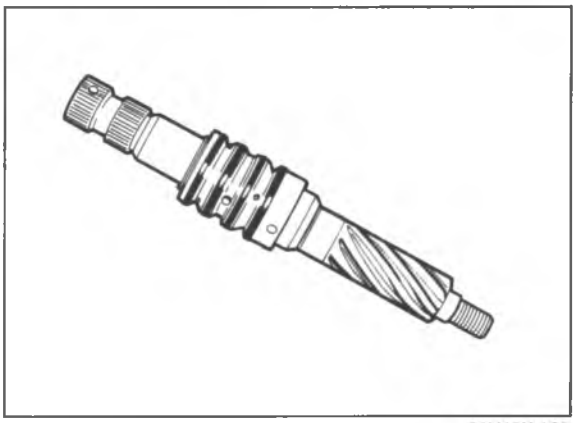
86U10X-135

INSPECTION

Check the following and replace any faulty parts.

Pinion shaft assembly

1. Pinion shaft teeth wear or damage
2. Control valve damage, clogging, and wear

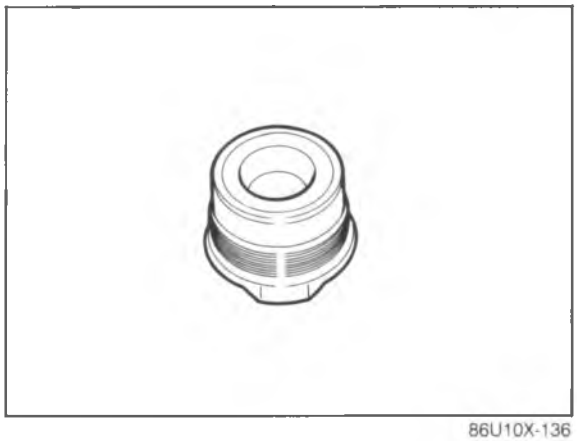
86U10X-136

Rack bushing

Wear or damage

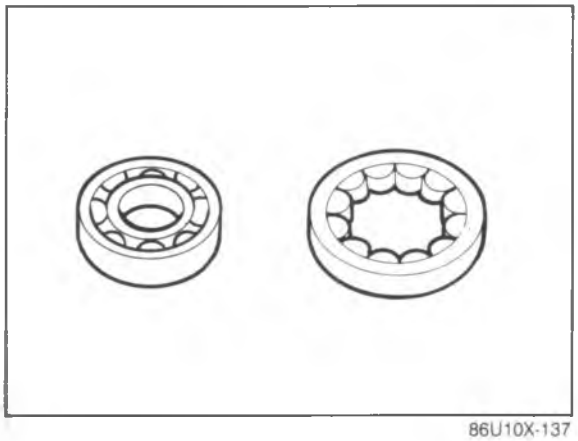
86U10X-137

Bearing

Wear, damage, and operation

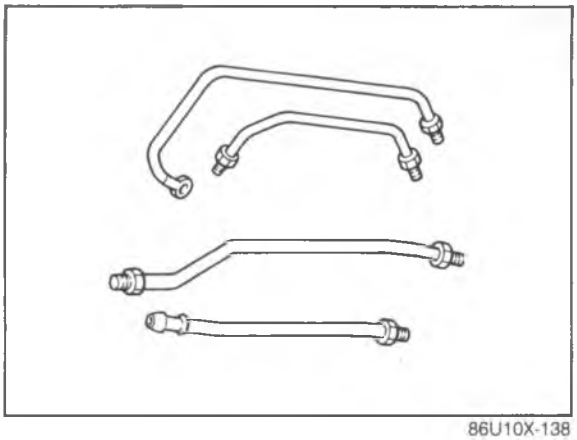

86U10X-138

Oil pipe
Clogging or damage

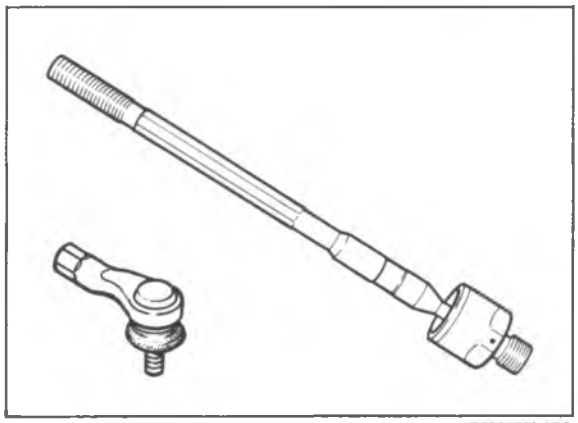

86U10X-139

Tie-rod and tie-rod end
1. Tie rod damage
2. Tie-rod ball joint damage and operation
3. Tie rod-end damage and operation

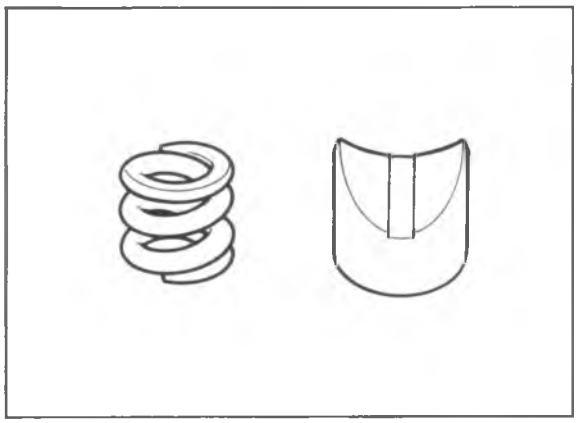

86U10X-140

Pressure pad and spring
1. Pressure pad damage
2. Spring damage

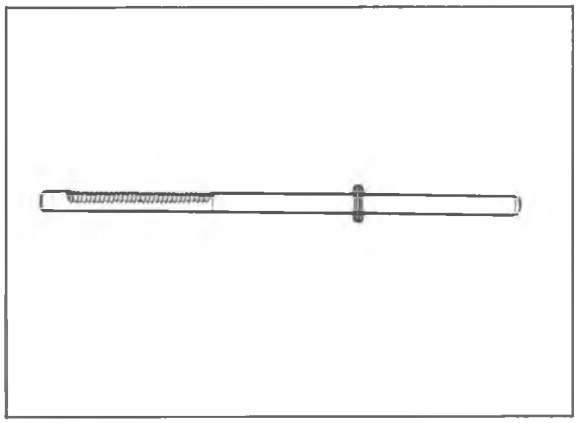

86U10X-141

Rack
1. Rack cracking, damage, or wear of teeth
2. Seal ring holder wear or damage
3. Rack piston side corrosion

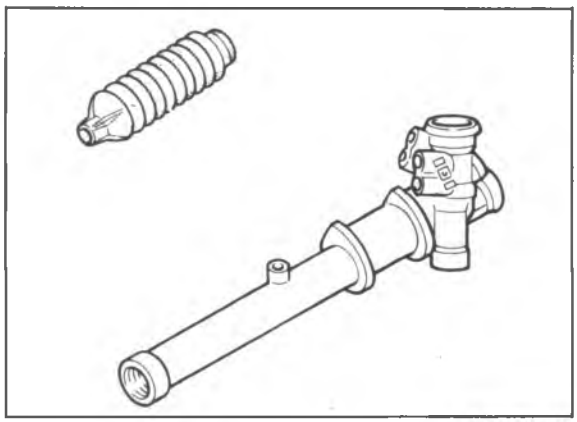

86U10X-142

Gear housing and boots

1. Gear housing cracking or damage
2. Boot cracking or tearing

ASSEMBLY

Torque Specifications

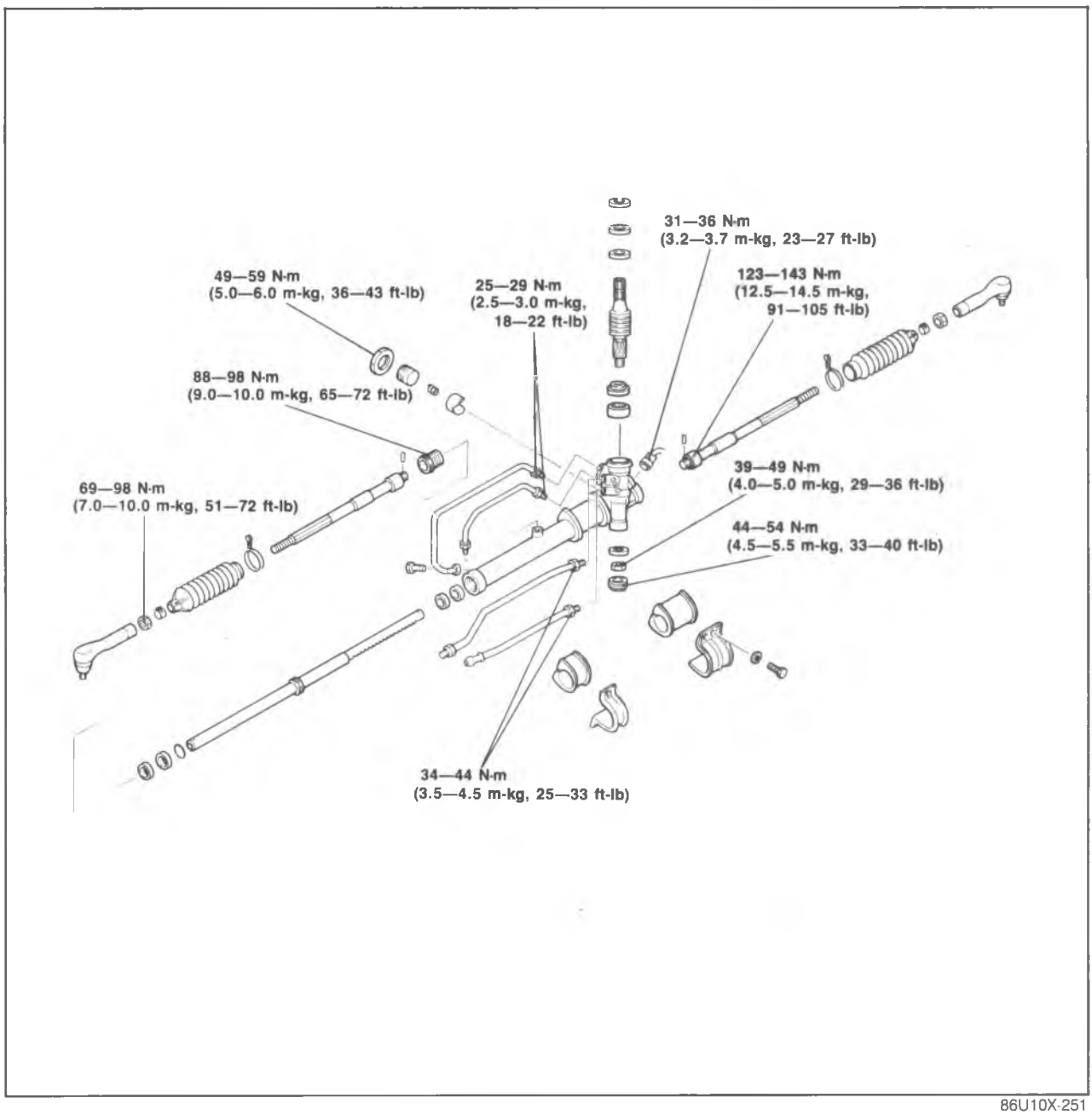

86U10X-251

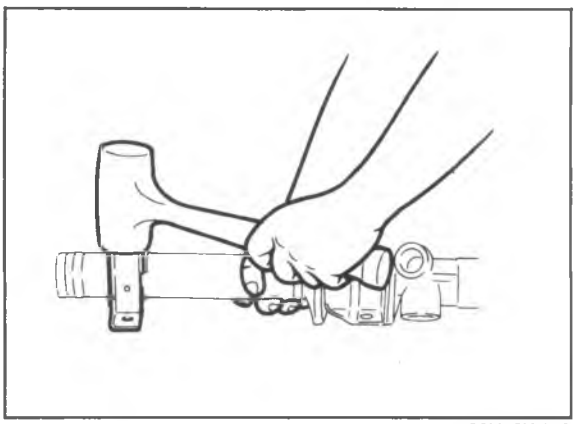

86U10X-143

Mounting bracket and rubber

1. Install the mounting rubber.
2. Tap the mounting bracket on with a plastic hammer.

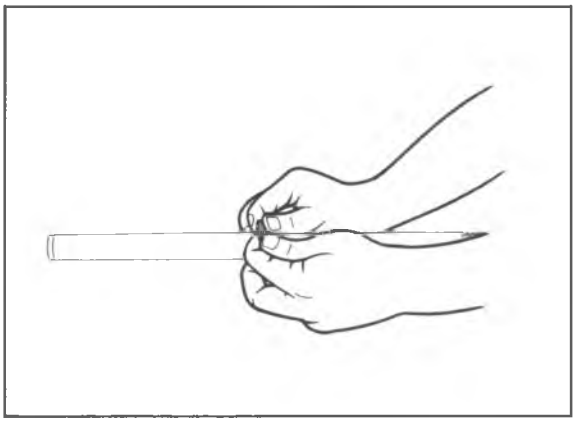

86U10X-144

O-ring and seal ring

1. Apply AFT to the O-ring and seal ring.
2. Install the O-ring in the ring groove of the rack.
3. Install the seal ring in the groove of the rack.

Note
Be careful not to cut or otherwise damage the edge of the seal ring.

4. Compress the seal ring by hand to fit it to the groove.

86U10X-145

Needle bearing

1. Apply grease to the end of the **SST**.
2. Apply ATF to the needle bearing.
3. Set the needle bearing on the **SST**.

Note
When installing the needle bearing to the SST, install the embossed side first.

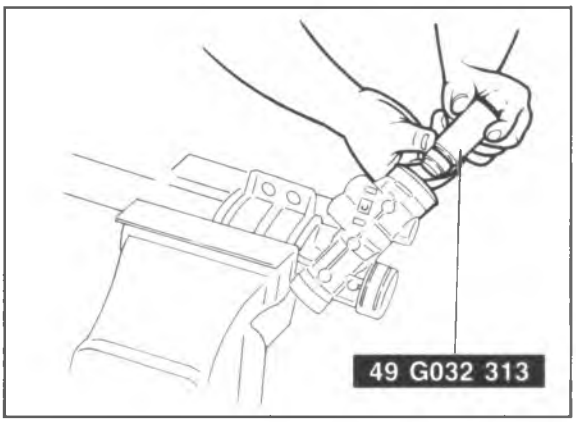

86U10X-146

4. Insert the needle bearing and the **SST** into the housing.

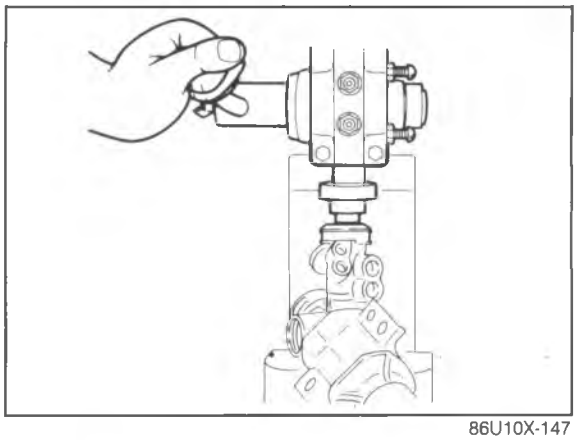

86U10X-147

5. Set the housing on a press and press in the bearing.

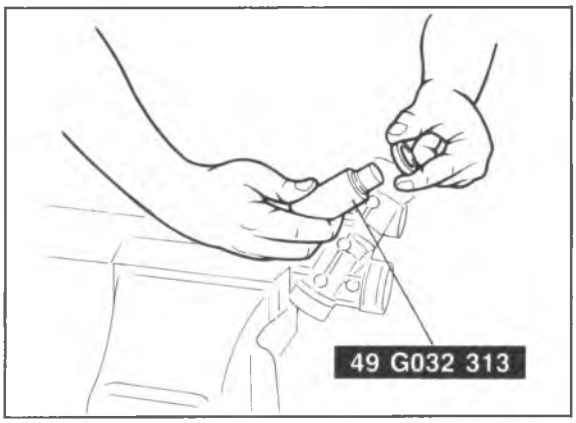

86U10X-148

Oil seal

1. Apply grease to the end of the **SST**.
2. Apply ATF to the oil seal.
3. Set the oil seal on the **SST**.

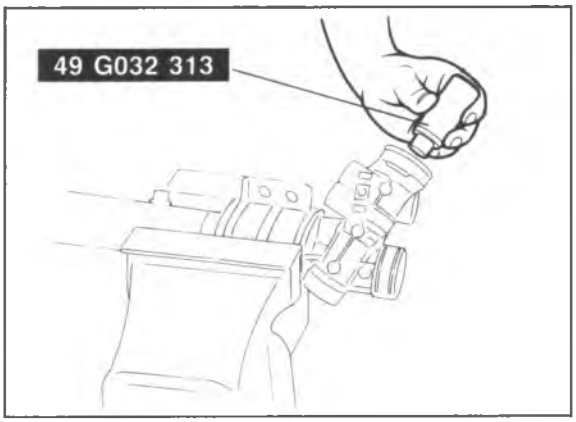

86U10X-149

4. Insert the oil seal and the **SST** into the housing.

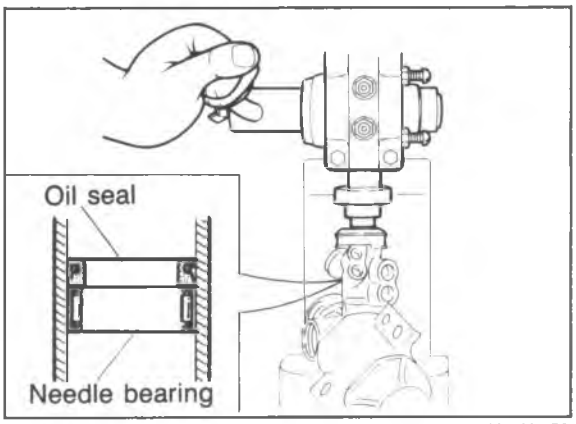

86U10X-150

5. Set the housing on a press and press in the seal.

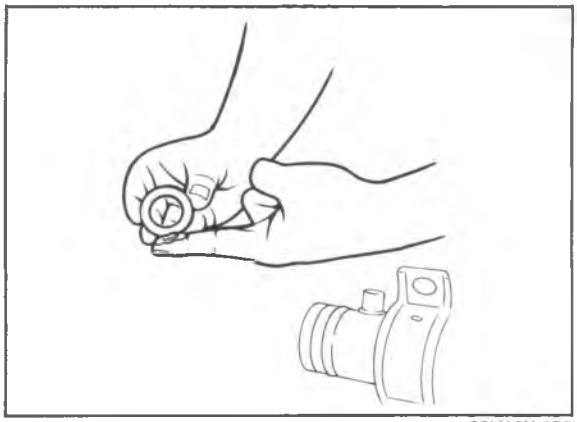

86U10X-151

Spacer and pinion housing side oil seal

1. Apply grease to flat surface of the spacer.

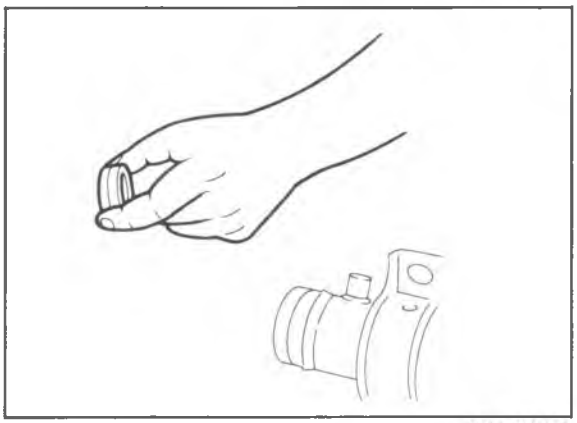

86U10X-152

2. Connect the oil seal to the grease coated surface of the spacer.
3. Apply ATF to the inside and outside of the spacer and oil seal.

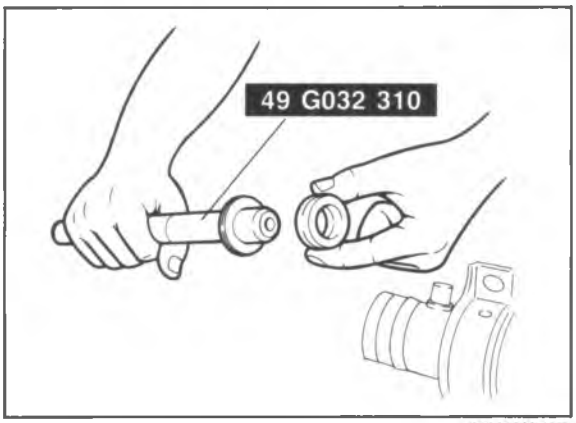

86U10X-153

4. Set the spacer and oil seal on the **SST**.

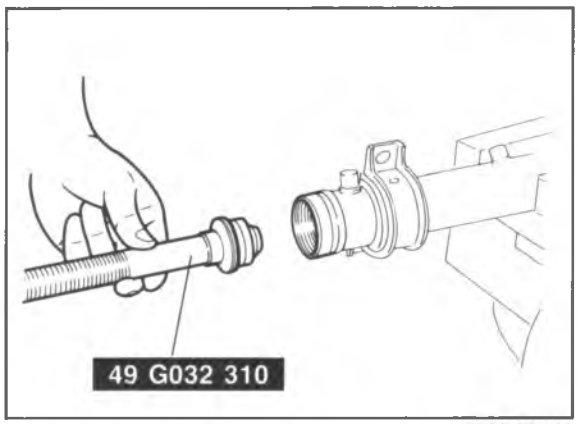

86U10X-154

5. Insert the **SST** from the tube side.

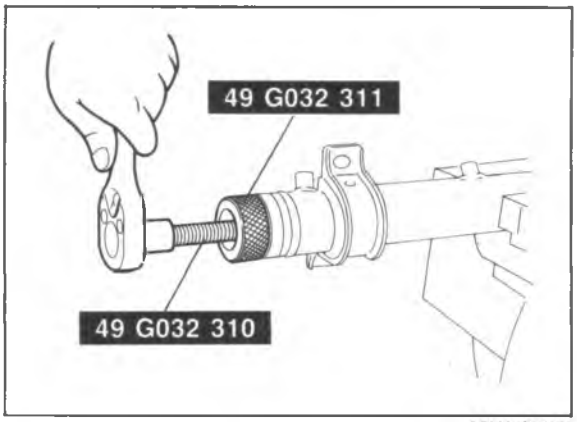

86U10X-155

6. Install and tighten the **SST** nut against the tube.
7. Turn the **SST** shaft in as far as it will go to push in the seal and spacer.
8. Remove the **SST**.

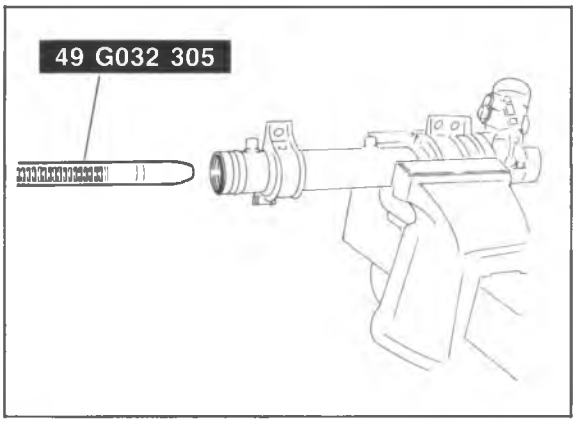

86U10X-156

Rack

1. Apply grease (lithium base, NLGI No.2) to the friction surface and teeth of the rack.
2. Slide the **SST** over the rack and slide it in from the tube side.
3. Remove the **SST**.

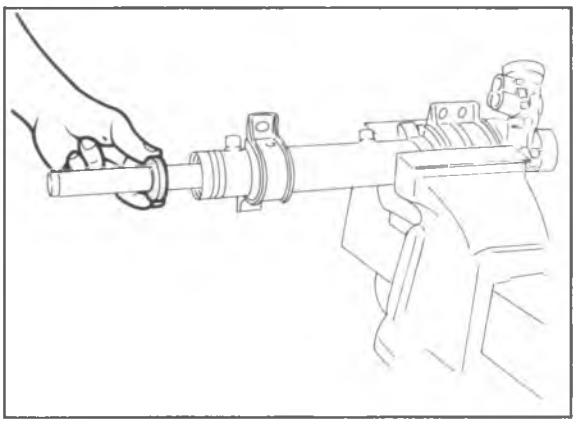
86U10X-157

Oil seal (Rack)

1. Apply ATF to the oil seal and slide it on the rack.

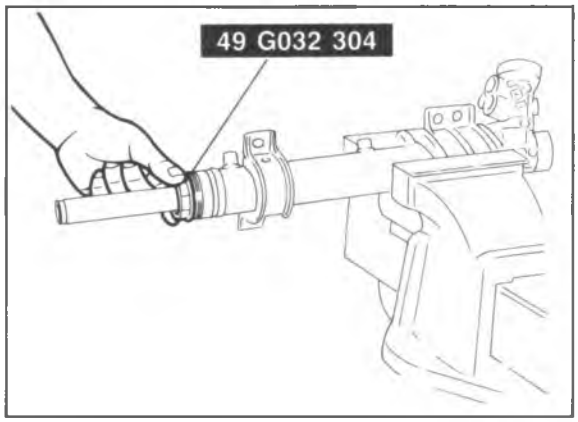

86U10X-158

2. Set the **SST** on the rack.
3. Turn the **SST** as far as it will go, and push the oil seal into the tube.
4. Remove the **SST**.

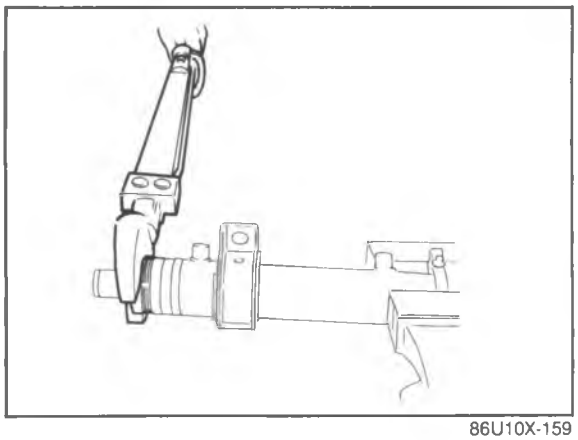

86U10X-159

Rack bushing

1. Install the rack bushing assembly in the rack housing.

   Tightening torque:
   88—98 N·m (9—10 m-kg, 65—72 ft-lb)

   Note
   The oil seal is pushed to the correct position in the rack housing by the tightening of the rack bushing.

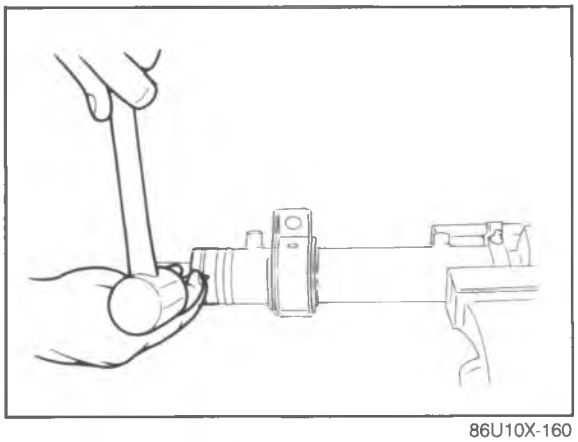

86U10X-160

2. Stake the rack housing at two points **approx 1.5 mm (0.06 in)** from the end with a hammer and center punch.

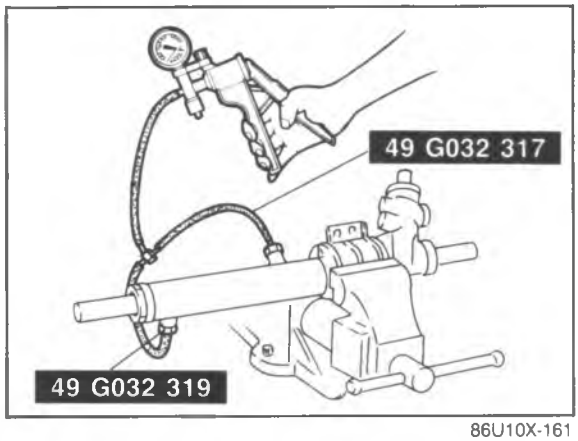

86U10X-161

Hermetic inspection

1. Connect the **SST** to the cylinder housing.
2. Connect a vacuum pump to the **SST**.
3. Apply **400 mmHg (15.7 inHg)** vacuum.
4. Verify that vacuum is held for at least **30 sec.** If not, check the seal and assembly.

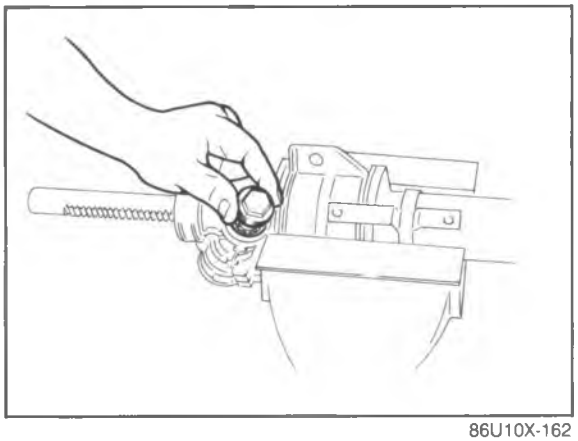

86U10X-162

Lower bearing

1. Secure the gear housing in a vise so that the lower bearing bore faces upward.
2. Apply ATF to the lower bearing, then install it in the housing.
3. Press the bearing into the gear housing with the housing cover. Tighten the cover until the tightening force suddenly increases.

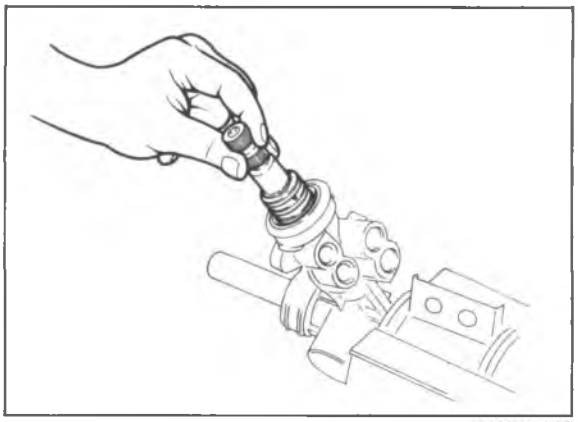

86U10X-163

Pinion shaft assembly

1. Apply grease (lithium base, NLGI No. 2) to the teeth of the pinion shaft.
2. Apply ATF to the seal ring and the friction surface of the control valve.
3. Install the pinion shaft in the housing.

Note

a) Be careful not do damage the oil seal by the teeth of the pinion.

b) Be careful not to damage the edge of the seal ring and control valve.

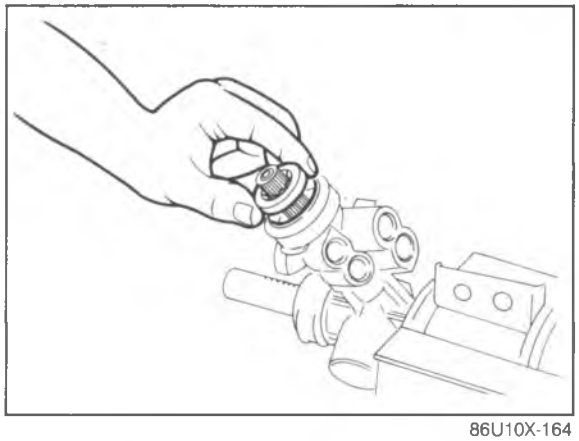

86U10X-164

Upper bearing

Apply ATF to the upper bearing, then install it.

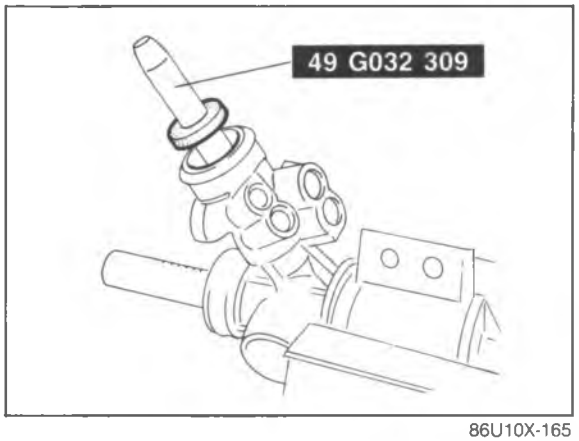

86U10X-165

Oil seal

1. Apply ATF to the oil seal, and fill inside the lip with grease (lithium base, NLGI No. 2).
2. Slide the **SST** over the serrations of the pinion shaft assembly.
3. Slide the oil seal over the **SST** and position it in the housing.

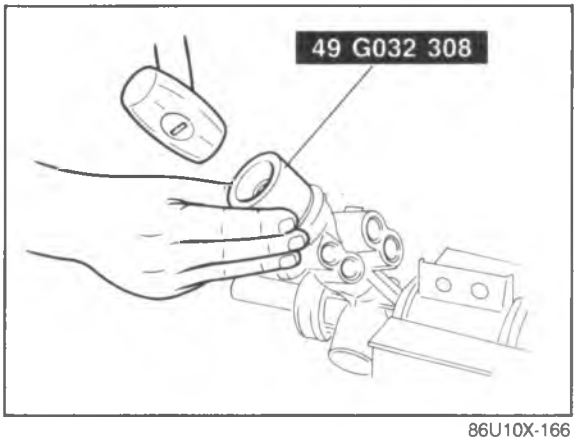

86U10X-166

4. Tap the oil seal in with the **SST** until the snap ring installation groove in the housing is just visible.

Note

Apply uniform force to the oil seal when installing.

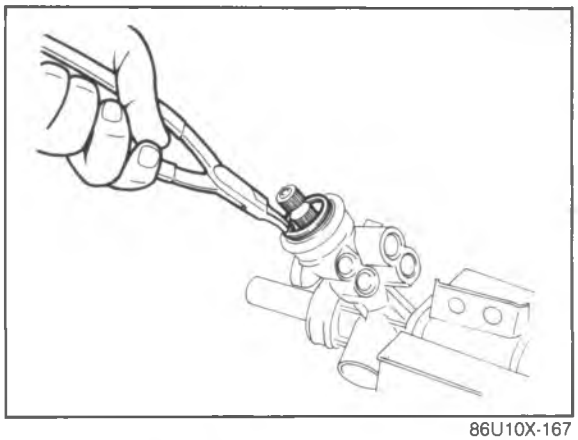

86U10X-167

Snap ring
Install the snap ring.

Note
Verify that the snap ring is correctly seated in the ring groove of the housing.

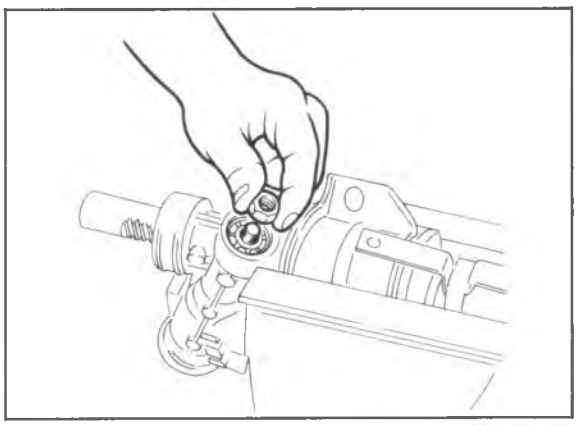

86U10X-168

Locknut
1. Temporarily install the tie-rod on the tube side of the rack.
2. Install the locknut and turn it until the tie-rod contacts the tube.
3. Tighten the locknut.

Tightening torque:
39—49 N·m (4.0—5.0 m-kg, 29—36 ft-lb)

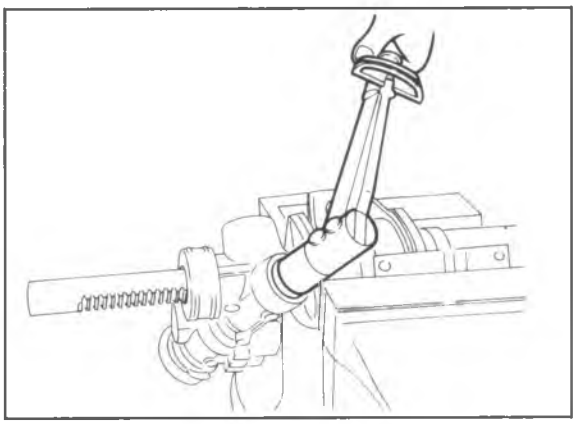

86U10X-169

Housing cover
1. Apply thread sealant to the housing cover threads.
2. Install the housing cover.

Tightening torque:
44—54 N·m (4.5—5.5 m-kg, 33—40 ft-lb)

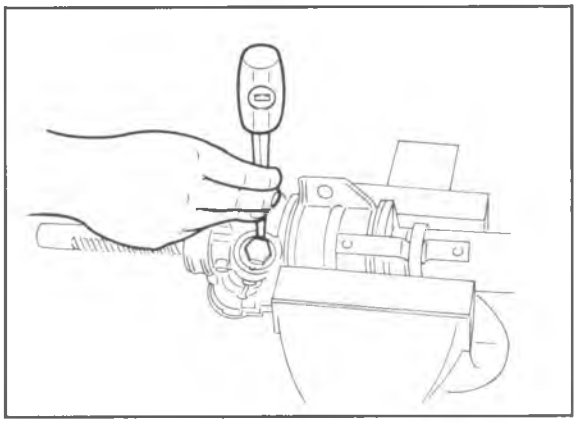

86U10X-170

3. Stake between the rack housing and housing cover at two points with a center punch.

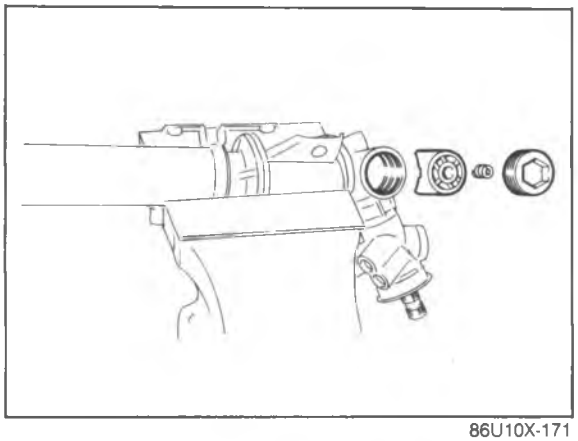

86U10X-171

Pressure pad

1. Secure the gear housing in a vise so that the pressure pad position faces upward.
2. Apply grease (lithium base NLGI No. 2) to the rack sliding surface of the pressure pad; then install it in the housing.
3. Install the pressure pad.

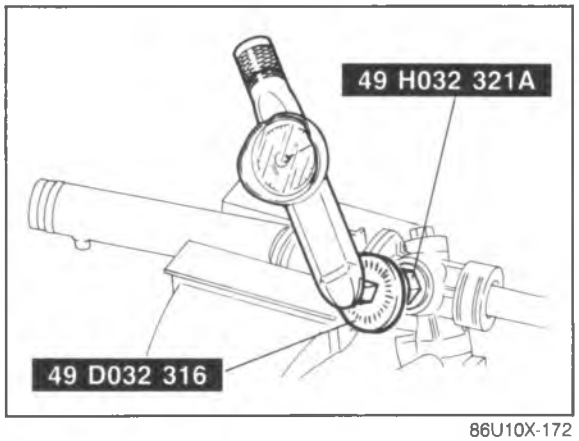

86U10X-172

Adjust cover

1. Set the rack in the center position.
2. Tighten the adjust cover to **9.8 N·m (100 cm-kg, 7.2 ft-lb)** then loosen it.
3. Tighten again to **4.9 ± 0.5 N·m (50 ± 5 cm-kg, 3.6 ± 0.4 ft-lb)**, and then return it 45°.
4. Apply thread sealant to the exposed threads of adjust cover.

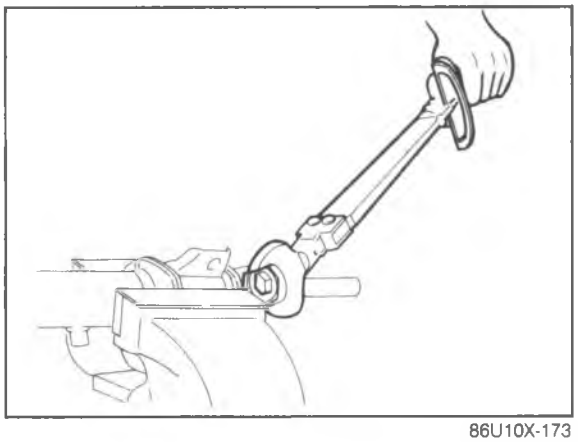

86U10X-173

5. Install and tighten the locknut.

Tightening torque:
49—59 N·m (5.0—6.0 m-kg, 36—43 ft-lb)

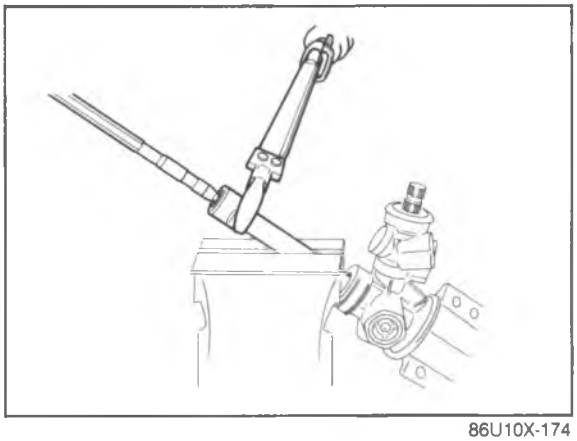

86U10X-174

Tie-rod

1. Secure the rack in a vise.
2. Install the tie rod on the rack.

Tightening torque:
123—143 N·m
(12.5—14.5 m-kg, 90.6—105 ft-lb)

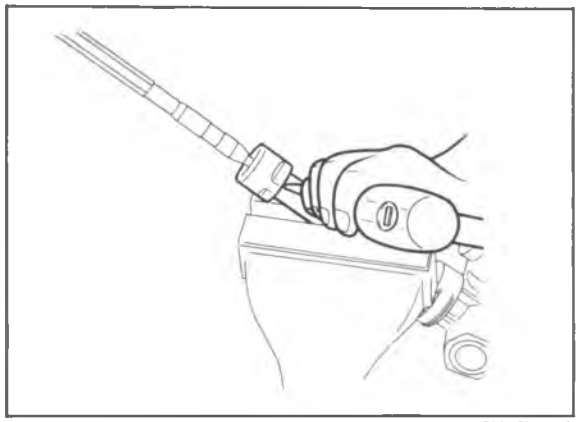

86U10X-175

3. Tap in a new roll pin.

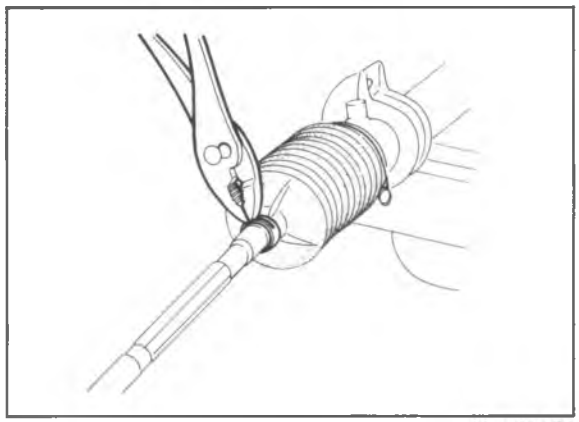

86U10X-176

Boot

1. Apply grease to the inner surface of the small end of the boot.
2. Install the boot. Wrap a new wire around the large end of the boot two times and then twist it 4 to 4.5 times. Bend the twisted part toward the mounting bracket.

   Note
   Be careful not to break the boot wire.

3. Install the spring clip on the small end of the boot.

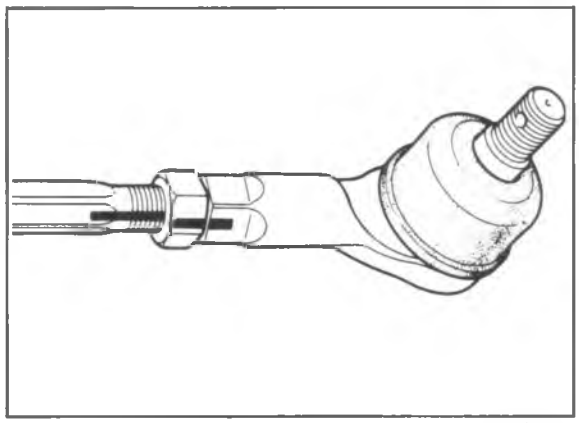

86U10X-177

Tie-rod end

Align with the mark made before disassembly, and then tighten the nut.

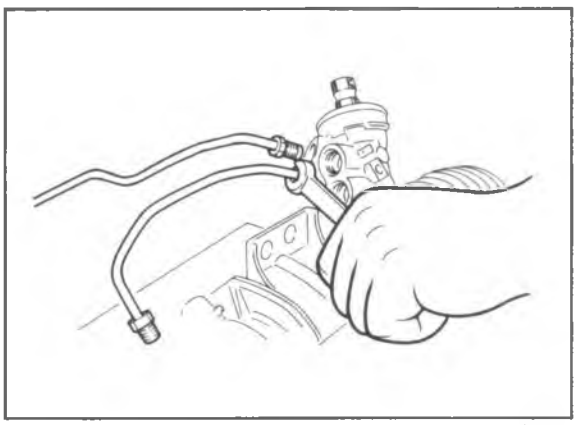

86U10X-178

Oil pipe

Secure the mounting bracket in a vise so that the oil pipe connections face upward.

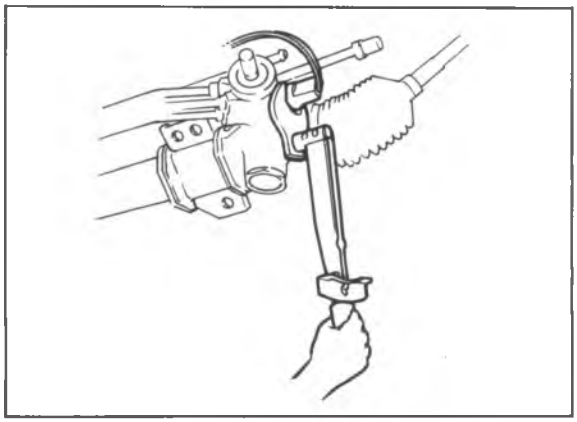

86U10X-179

Oil pressure switch

1. Install the pressure switch O-ring in the gear housing.
2. Install the oil pressure switch.

Tightening torque:
31—36 N·m (3.2—3.7 m-kg, 23—27 ft-lb)

ELECTRONICALLY-CONTROLLED POWER STEERING

DISASSEMBLY

Disassemble in the sequence shown in the figure, referring to the disassembly note for specially marked parts.

Caution

a) Because adjustment of the spool valve is not possible, do not disassemble the gear box for spool valve repairs. If repairs are necessary, replace the gear box assembly.

b) In order to prevent the entrance of dirt, all disassembly and assembly should be done in a clean area.

c) Before disassembly, plug the openings of all pipe installation fittings; then thoroughly clean the steering gear and linkage.

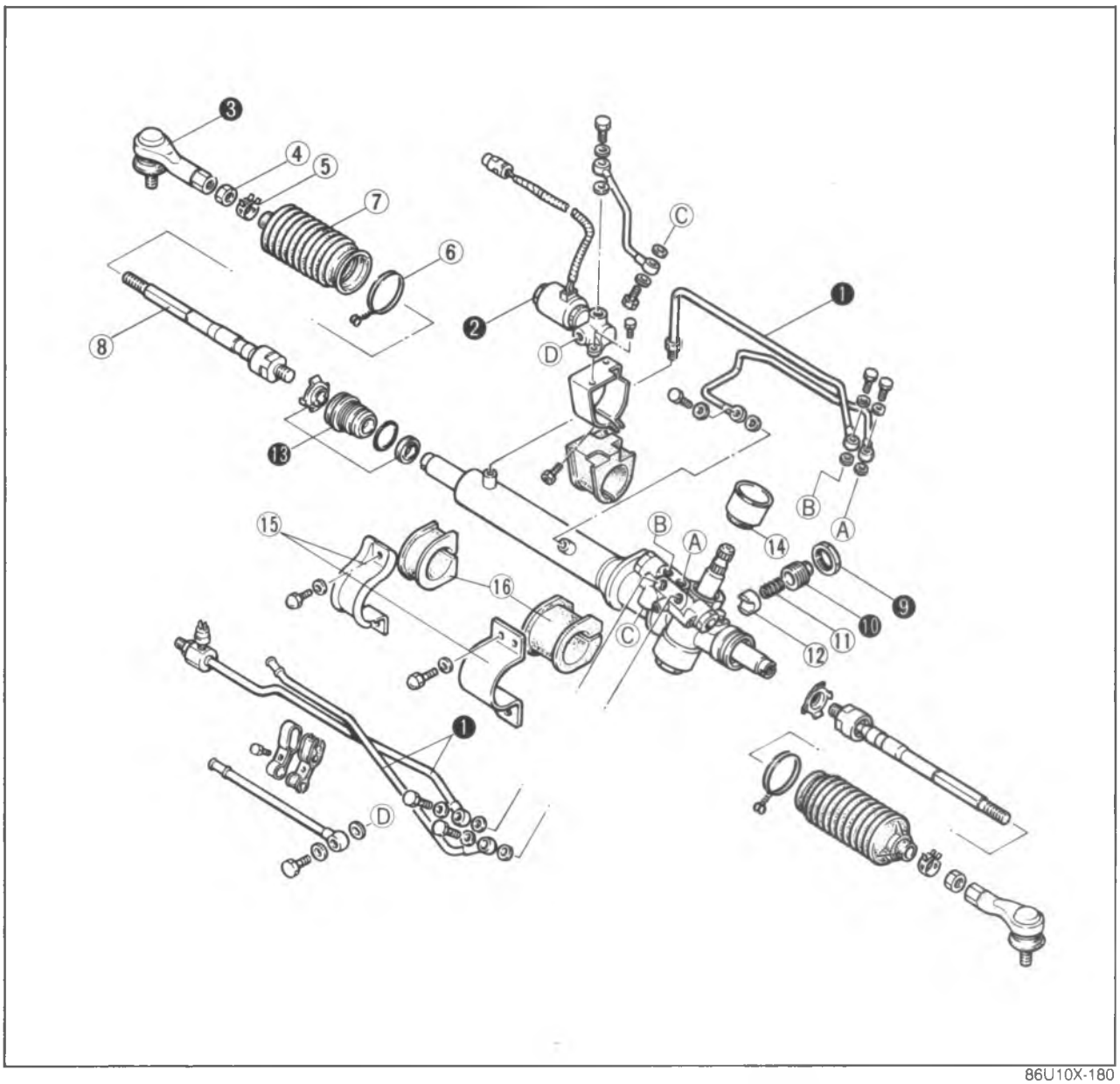

86U10X-180

1. Pipe
2. Solenoid valve
3. Tie-rod end
4. Tie-rod end locknut
5. Spring clip
6. Boot wire
7. Boot
8. Tie-rod
9. Adjust cover locknut
10. Adjust cover
11. Spring
12. Pressure pad
13. Outer box assembly
14. Oil seal
15. Mounting bracket
16. Mounting rubber

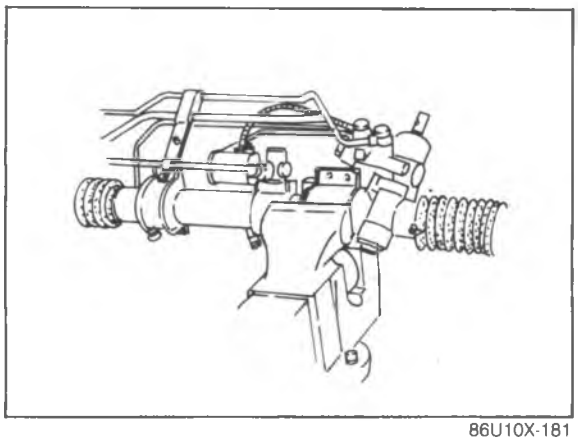

86U10X-181

Disassembly Note
Steering gear and linkage
Secure the mount part of the removed gear and linkage in a vise.

Caution
Insert protective material (such as copper plates) in the jaws of the vise.

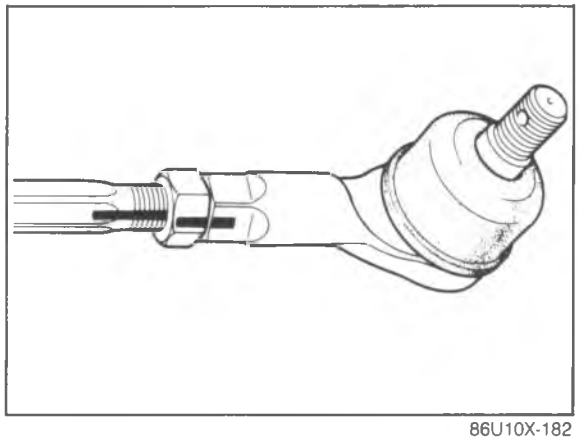

86U10X-182

Tie-rod ends
Before removing the tie-rod ends, make a mark for proper installation.

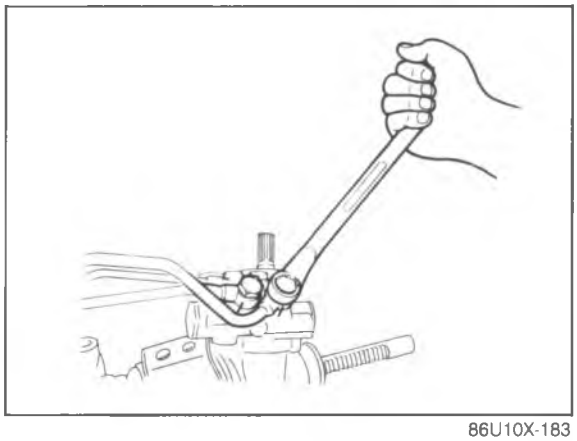

86U10X-183

Oil pipe
Mark the pressure and return pipes and the valve case for proper installation. Remove the pipes.

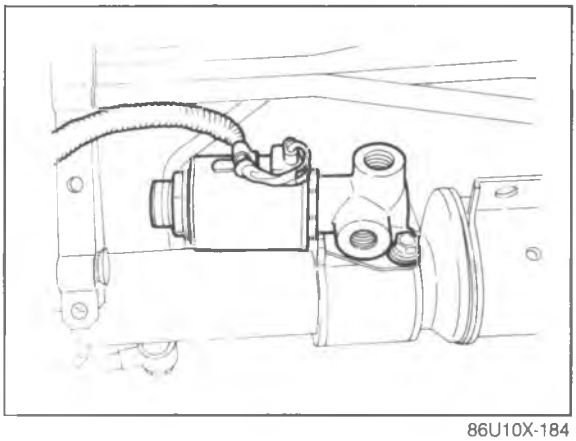

86U10X-184

Solenoid valve
Remove the solenoid valve.

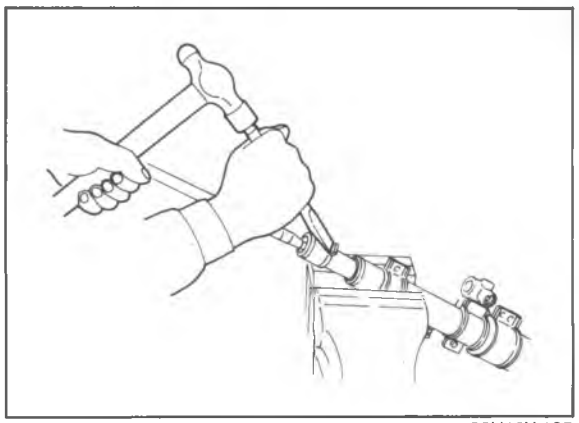

86U10X-185

Tie-rods

1. Uncrimp the washer as shown in the figure.

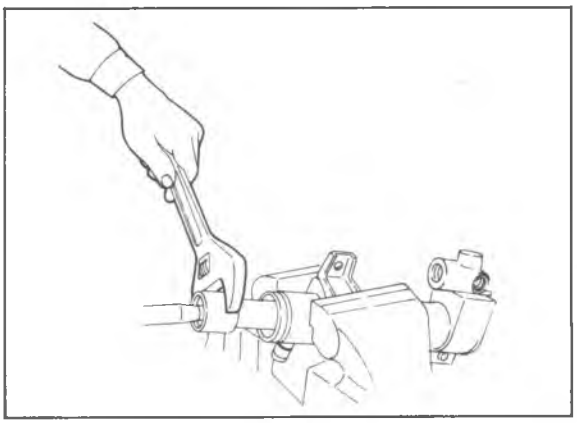

63U10X-127

2. Remove the tie-rod from the rack.

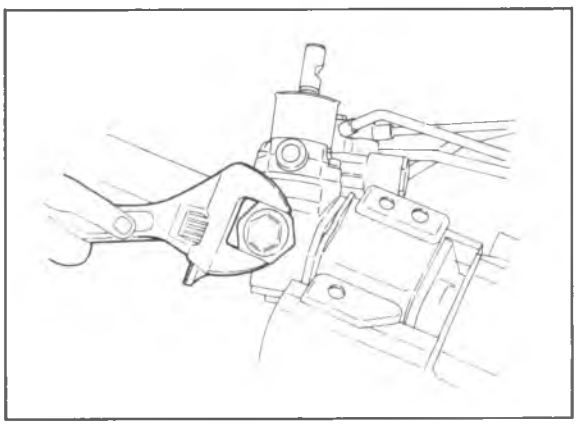

86U10X-186

Locknut and adjust cover

Loosen the locknut and remove the adjust cover, spring, and pressure pad.

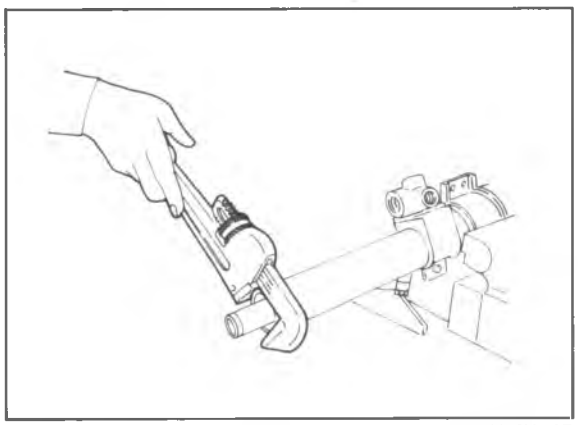

86U10X-187

Outer box

Protect the outer box with cloth and remove it with a pipe wrench.

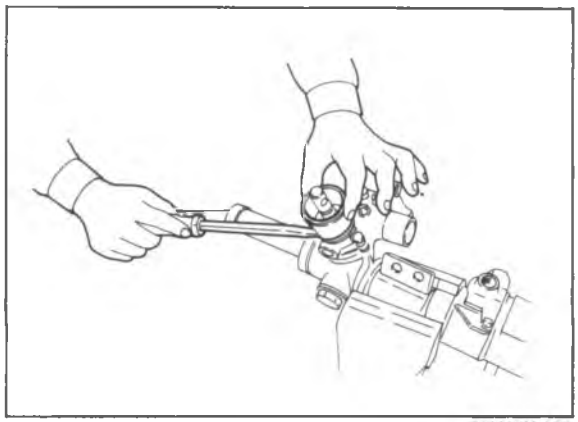

86U10X-188

Oil seal
Remove the oil seal with a screwdriver.

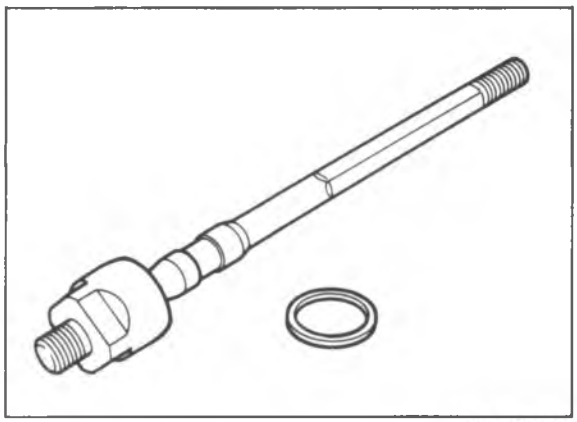

86U10X-189

INSPECTION
Check the following and replace any faulty parts.
1. Cracked, damaged, or deteriorated boots
2. Worn pressure pad friction surface
3. Loose or sticking tie-rod balljoint
4. Bent or damaged tie-rod or tie-rod end

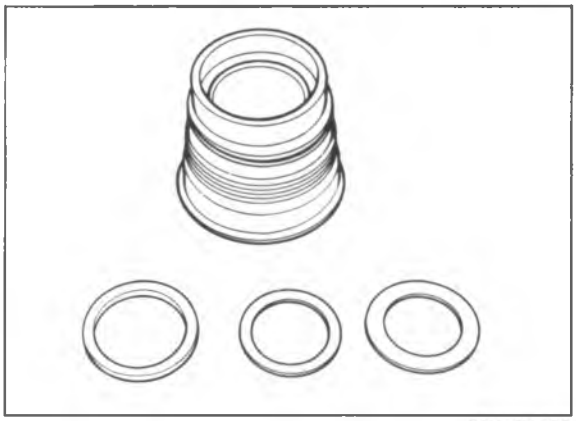

86U10X-190

5. Worn outer box bushing

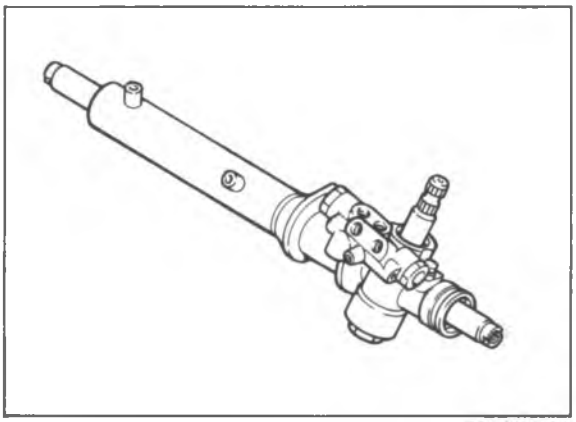

86U10X-191

6. Cracked or damaged gear housing
7. Steering gear oil leakage

ASSEMBLY

Torque Specifications

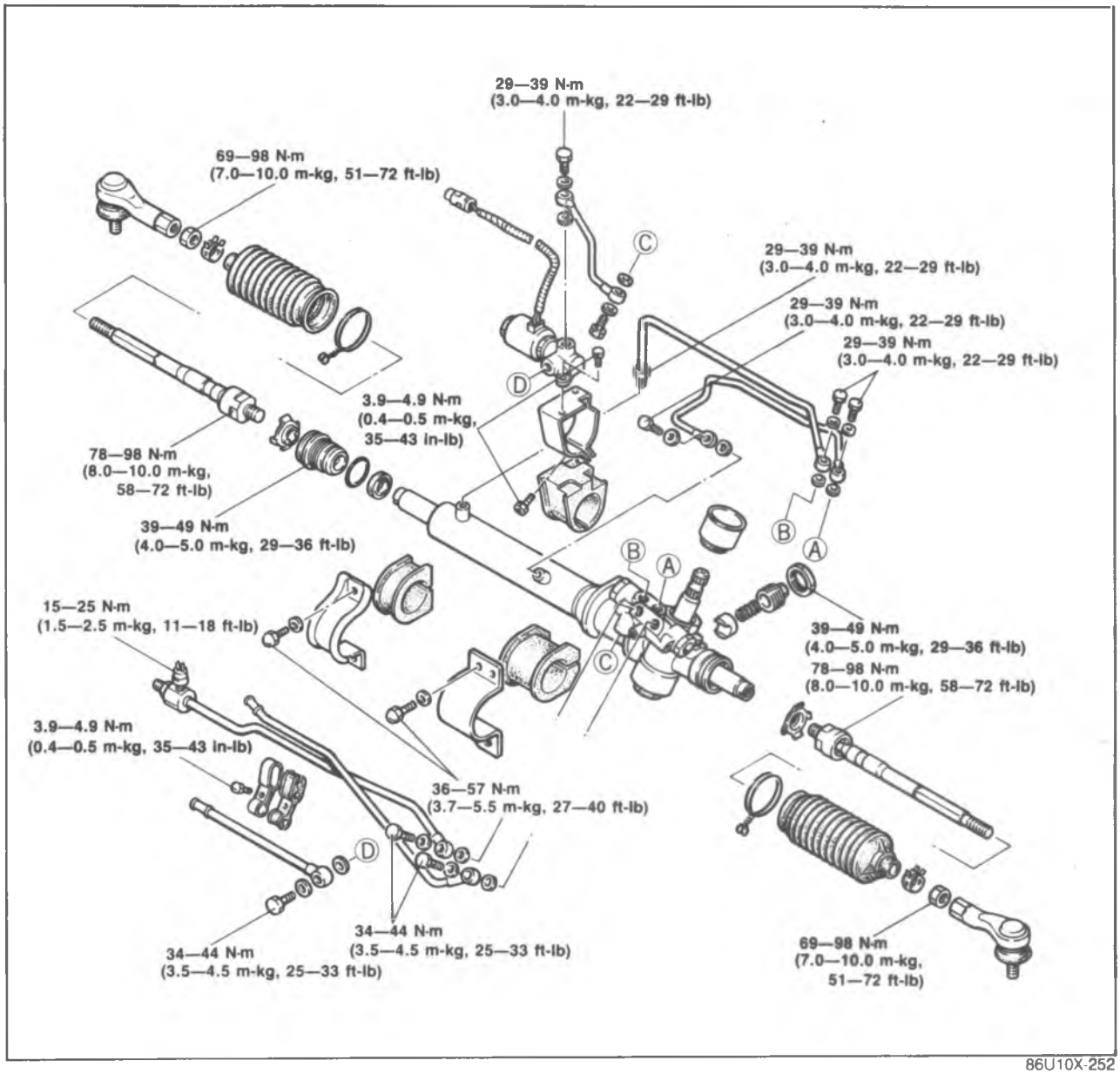

86U10X-252

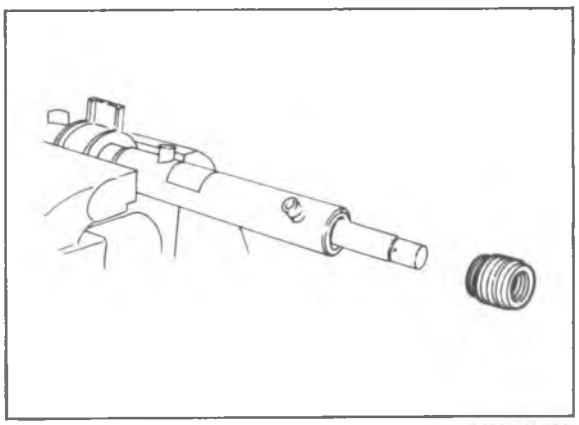

86U10X-192

1. Install the outer box in the rack housing.

Note
Coat the seals and O-rings with ATF.

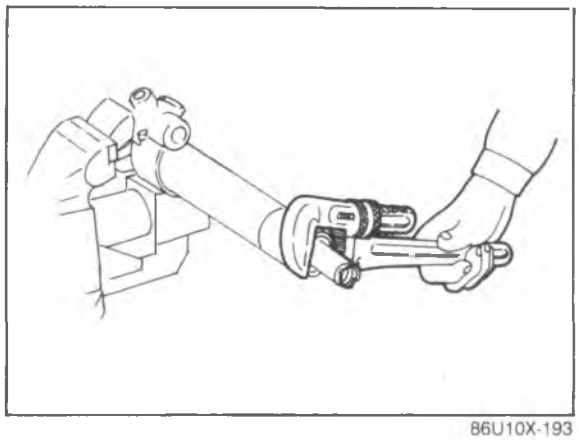

86U10X-193

2. Protect the outer box with cloth and tighten it with a pipe wrench.

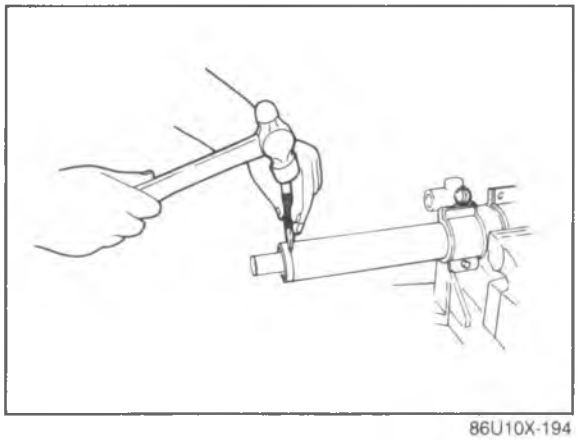

86U10X-194

3. Stake between the outer box and the rack housing with a center punch.

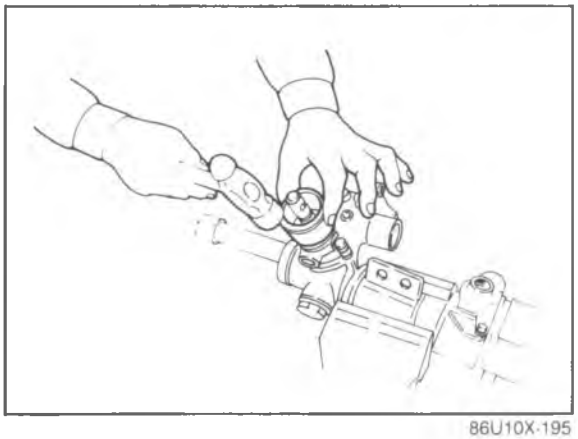

86U10X-195

4. Install the oil seal with a suitable pipe.

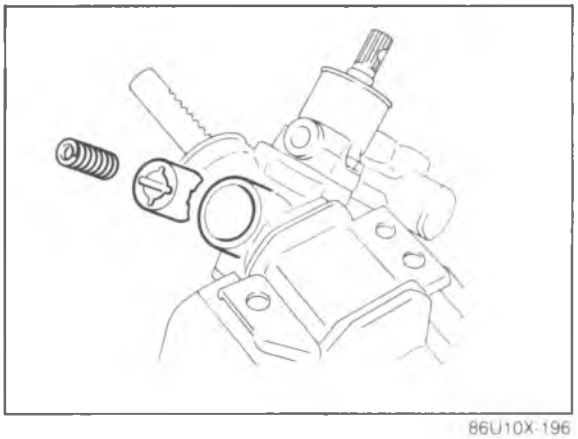

86U10X-196

5. Install the pressure pad and spring in the gear housing.

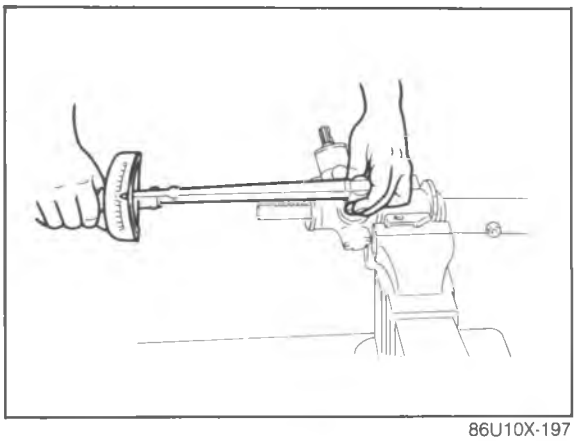

86U10X-197

6. Apply thread sealant to the threads of the adjust cover.

7. Install the adjust cover to the gear housing and tighten it as specified; then loosen it 35°

Tightening torque:
4.5—5.5 N·m
(45—55 cm-kg, 39—48 in-lb)

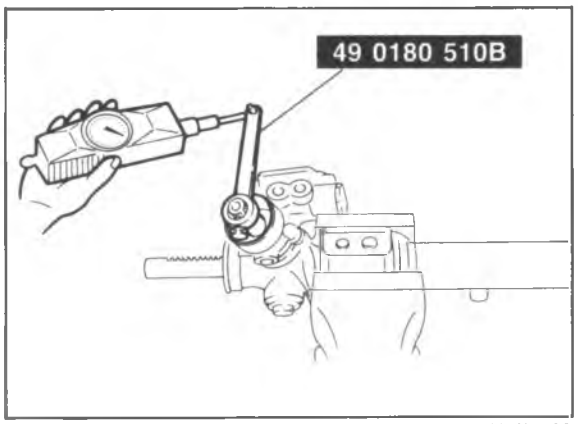

86U10X-198

8. Measure the pinion torque with the **SST**.

Pull scale: 1,000—1,400 g (35.3—49.4 oz)

9. If the pinion torque is not within specification, readjust the adjust cover.

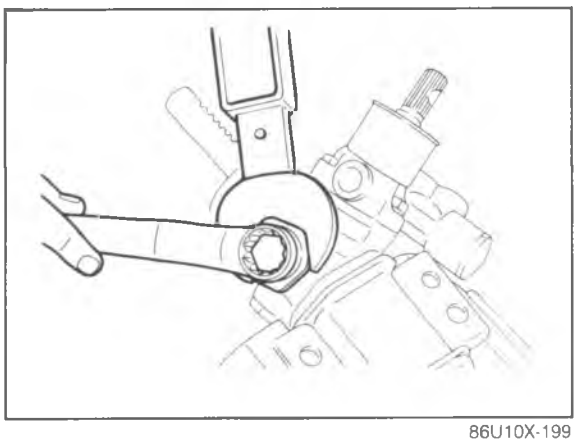

86U10X-199

10. Lock the adjust cover with the locknut.

Tightening torque:
40—50 N·m
(4—5 m-kg, 29—36 ft-lb)

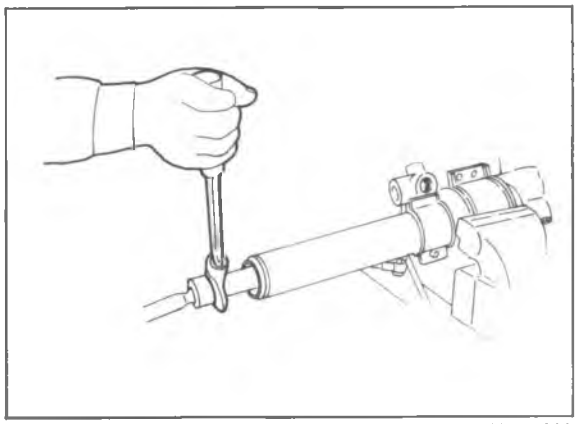

86U10X-200

11. Set the rack in a vise and install the and washer. Tighten the tie-rod.

Tightening torque:
60—80 N·m
(6—8 m-kg, 43—58 ft-lb)

Caution
Insert protective material (such as copper plates) in the jaws of the vise.

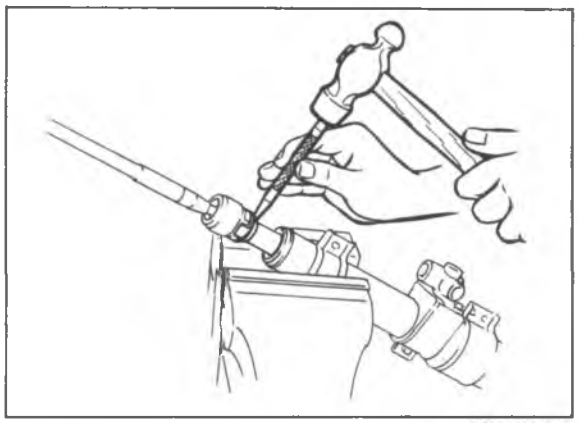

86U10X-201

12. Stake the washer in two places with a punch.

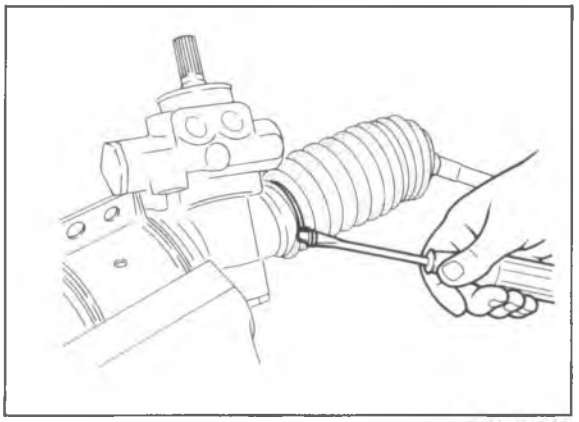

86U10X-202

13. Install the boot. Wrap a new wire around it two times and twist it 4 to 4.5 times.

Caution
Be sure that the boot is not twisted or dented.

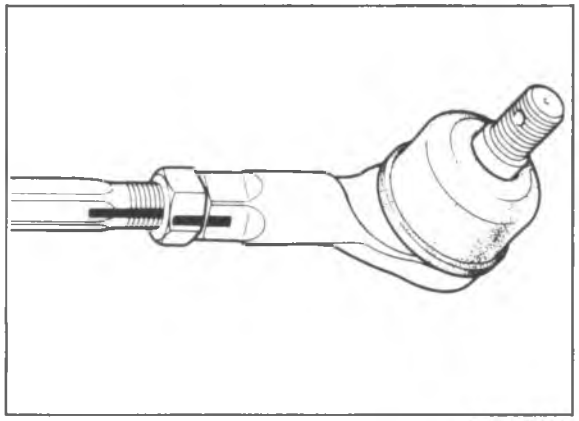

86U10X-203

14. Install the tie-rod ends, aligning them with the marks made before disassembly.

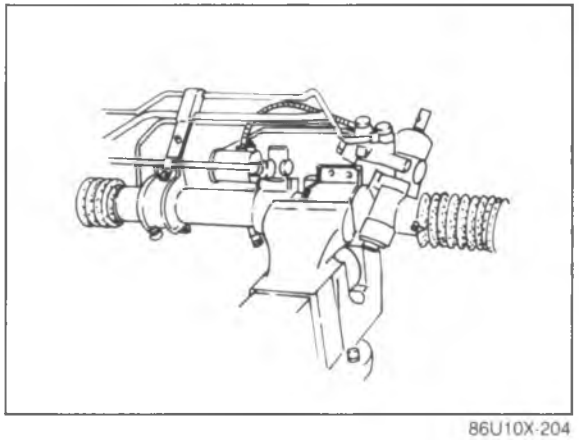

86U10X-204

15. Install the solenoid valve and pressure switch.
16. Align the oil pipes with the marks made before disassembly, then tighten them.

OIL PUMP

REMOVAL AND INSTALLATION

1. Jack up the front of the vehicle, and support it with safety stands.
2. Remove in the order shown in the figure, referring to the removal note for specially marked parts.
3. Install in the reverse order of removal.
4. Tighten all nuts and bolts to the specified torque, referring to the figure.

Note

a) The power steering fluid will leak out when the return hose or the pressure hose is disconnected. Prepare a suitable container for it to drain into.

b) After installation, inspect the deflection of the oil pump belt and bleed the air from the system, then check for fluid leakage.

2WS

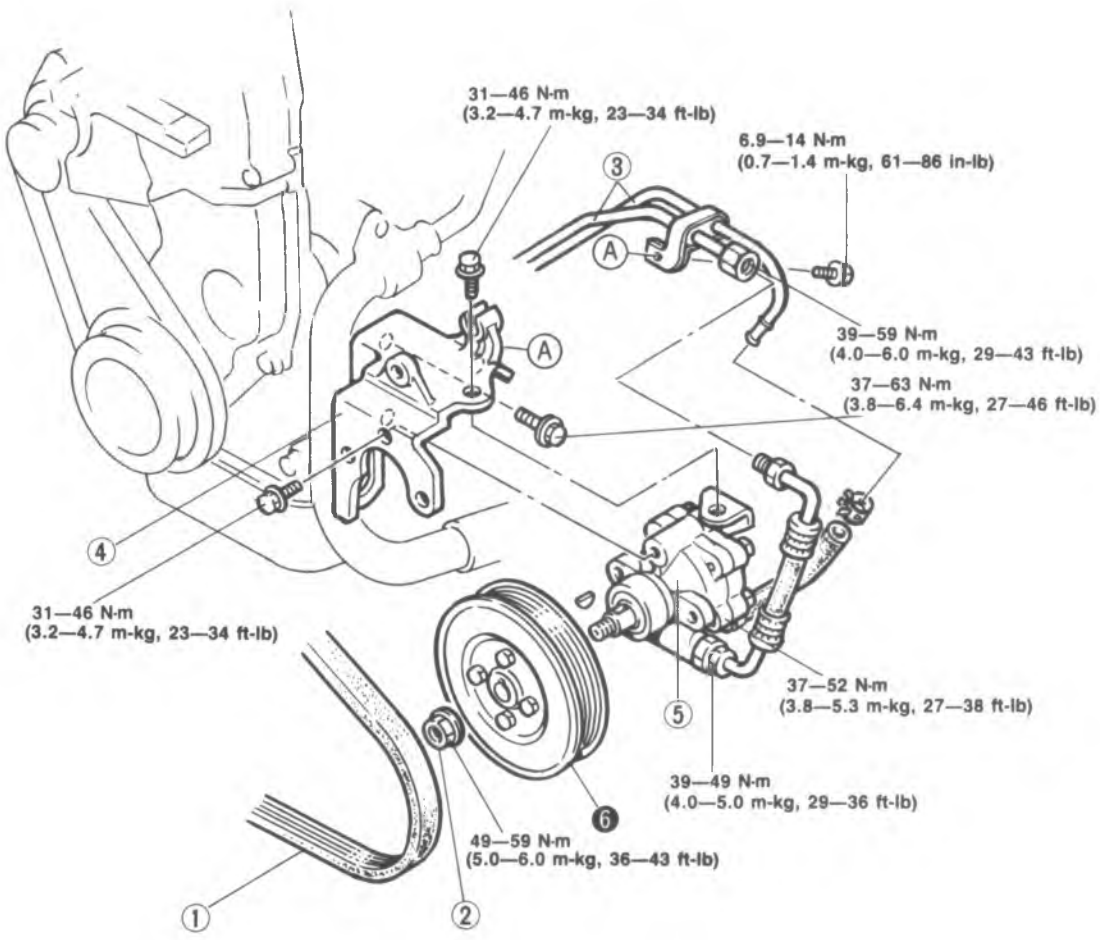

86U10X-205

1. Belt
2. Nut
3. Pipes
4. Bracket
5. Oil pump
6. Oil pump pulley

4WS

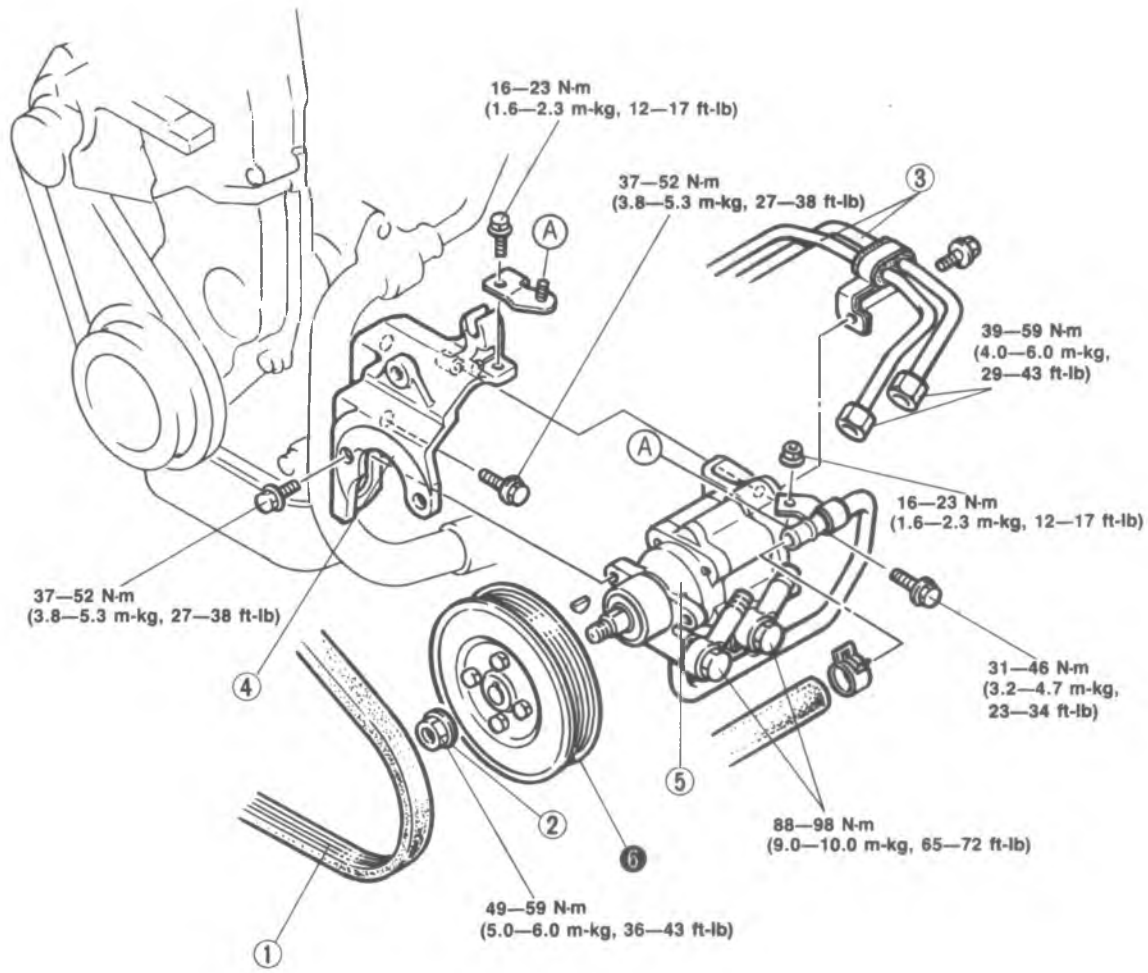

86U10X-206

1. Belt
2. Nut
3. Pipes
4. Bracket
5. Oil pump
6. Oil pump pulley

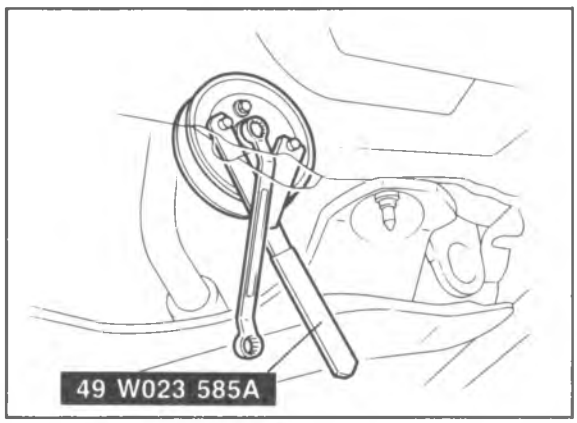

86U10X-207

Removal Note

Oil pump (2WS, 4WS)

1. Hold the oil pump pulley with the **SST**, and remove the pulley nut.
2. Slide the pulley forward. Remove the hose, pipes, and the pump.
3. Remove the pulley.

ELECTRICAL COMPONENTS OF ELECTRONICALLY-CONTROLLED POWER STEERING (ECPS)

CIRCUIT DIAGRAM

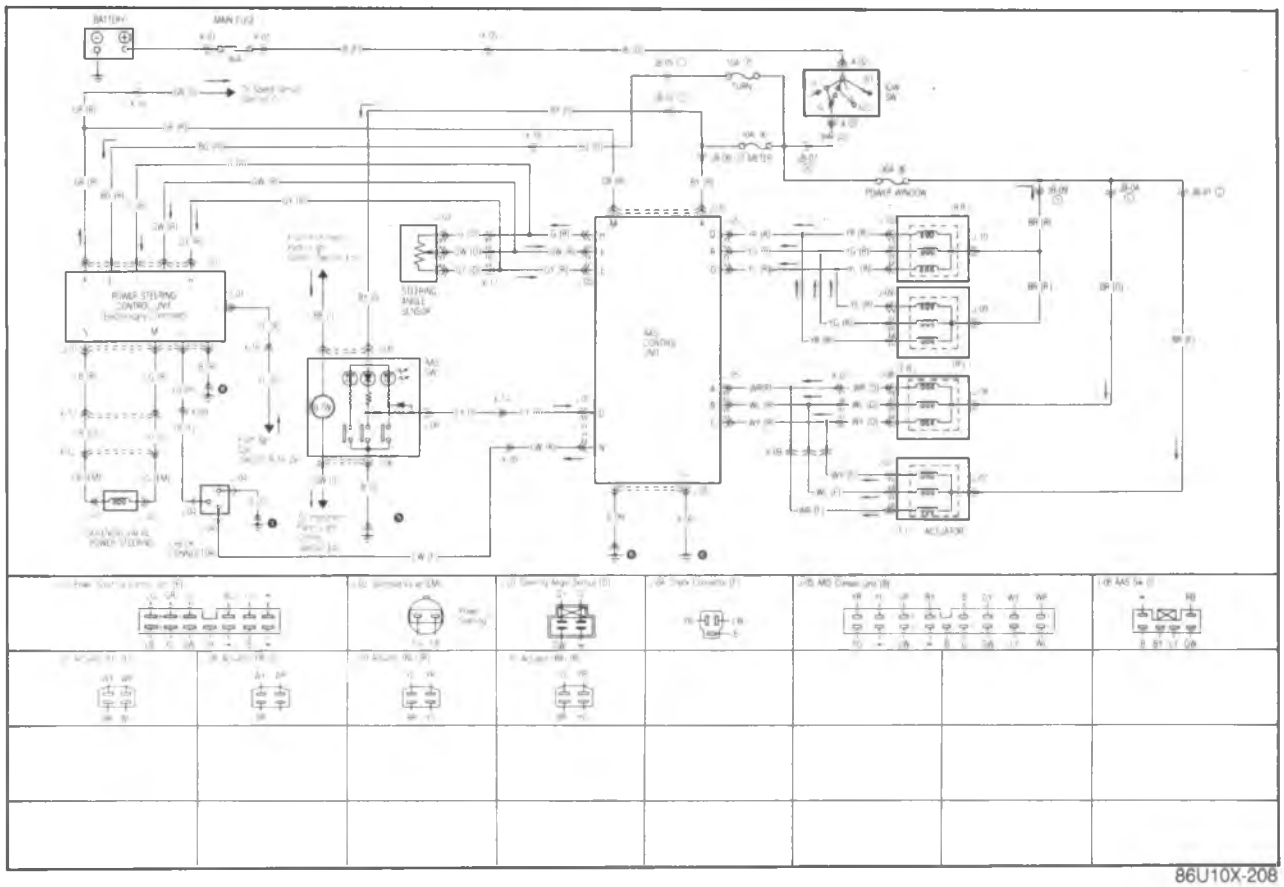

86U10X-208

Note
Refer to page 10—4 for the component location.

TROUBLESHOOTING GUIDE

The power steering control unit contains a self-diagnosis function to detect malfunctions within itself, the ECPS electrical components and circuits.
If a malfunction is detected, the control unit indicates where the problem is located by outputting specific voltage pulsations at terminal wire (YB) of the check connector.
Troubleshooting of the ECPS system, then, is easily performed by comparing the output pattern with those of the Diagnosis Table on pages 10—87 and 88.

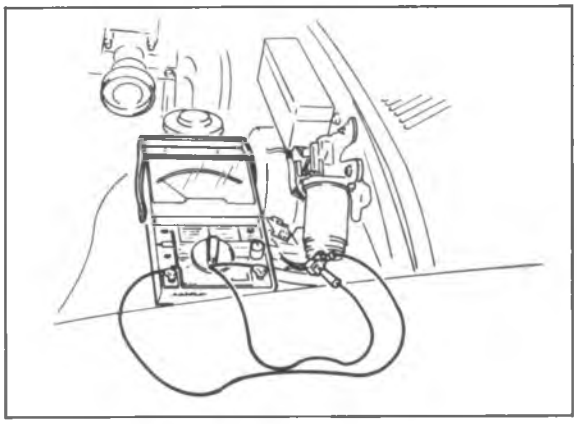

86U10X-209

TROUBLESHOOTING

How To Use Self-Diagnosis System

By using the control unit's self-diagnosis function and a voltmeter, malfunctions of the system are easily determined. When diagnosing malfunctions, follow the steps below.

1. Connect a voltmeter to terminal wire (YB) of the check connector in the engine compartment.
2. Check the output patterns as described on the following page.

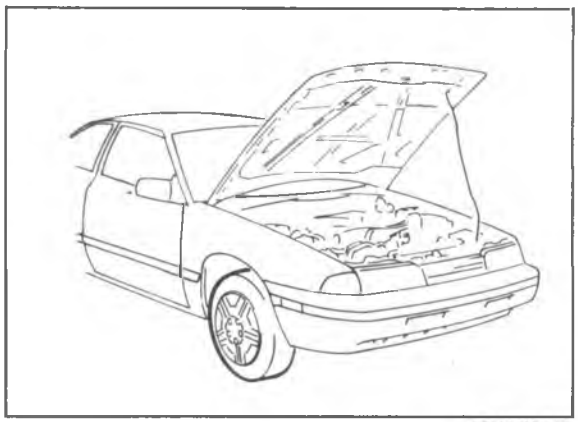

86U10X-210

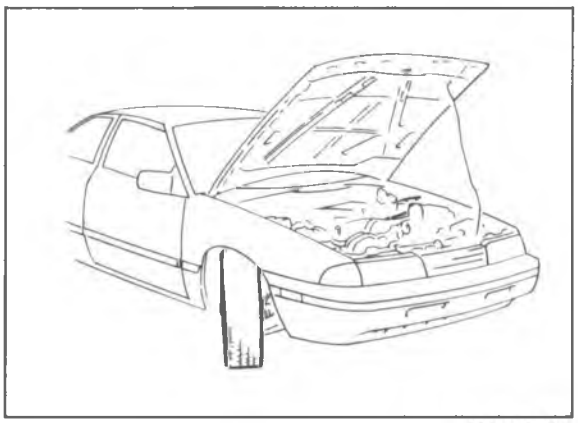

86U10X-211

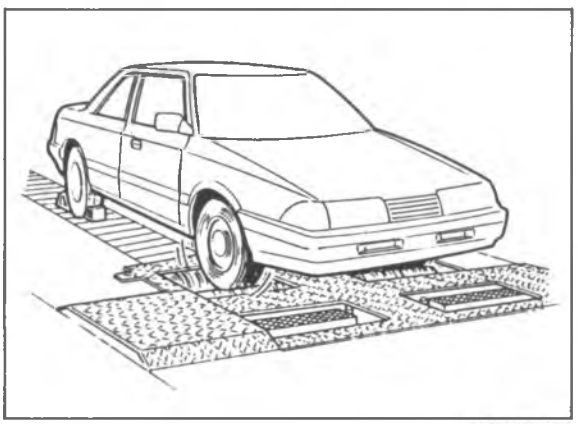

86U10X-212

Checking Condition

Condition A

1. Turn the ignition switch OFF.
2. Start the engine and let it idle.
3. Turn the steering wheel to the straight-ahead position, and check the output pattern.

Normal pattern	

Refer to page 10—87 for other patterns and indicated failure points.

Condition B

1. Turn the ignition switch OFF.
2. Start the engine and let it idle.
3. Turn the steering wheel 45° left and right from the center, and check the output pattern.

Normal pattern	

Refer to page 10—87 for other patterns and indicated failure points.

Condition C

1. Turn the ignition switch OFF.
2. Place the vehicle on a chassis roller tester. Block the rear wheels, and secure it with chains.
3. Start the engine. Put the transmission in gear and operate the vehicle to more than 10 km/h (6.2 mph).
4. Check the output pattern.

Normal pattern	

Refer to page 10—88 for other patterns and indicated failure points.

Note

For vehicles equipped with ABS, the ABS warning light may come on. This is not a failure. The light will go off when turning the ignition switch OFF and back ON.

86U10X-213

Diagnosis Table

Condition	Output pattern	Malfunction	Flow chart No.
A **Steering wheel in straight ahead position with engine idling.**	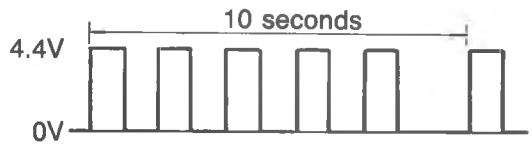	**Power steering solenoid valve** or **wiring harness** (Control unit to Solenoid valve)	**P/S—1** Refer to page 10—89
		Wiring harness (Control unit to Ignition coil)	**P/S—2** Refer to page 10—89
		Steering wheel angle sensor or **wiring harness** (Control unit to Angle sensor)	**P/S—3** Refer to page 10—90
		Normal operation	—
		Wiring harness (Fuse box to Control unit or Control unit to Body ground)	**P/S—5** Refer to page 10—91
B **Steering wheel turned 45° left and right from center with engine idling**	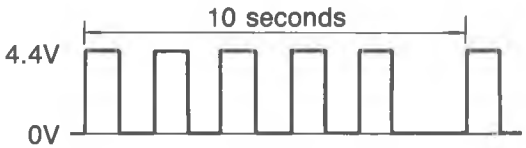	**Power steering solenoid valve** or **wiring harness** (Control unit to Solenoid valve)	**P/S—1** Refer to page 10—89
		Wiring harness (Control unit to Ignition coil)	**P/S—2** Refer to page 10—89
		Normal operation	—
		Steering wheel angle sensor or **wiring harness** (Control unit to Angle sensor)	**P/S—3** Refer to page 10—90

86U10X-214

Condition	Output pattern	Malfunction	Flow chart No.
B Cont'd	0V	**Wiring harness** (Fuse box to Control unit or Control unit to Body ground)	**P/S—5** Refer to page 10—91
C **Front wheels driven at more than 10 km/h (6.2 mph)**	10 seconds; 4.4V; 0V	**Power steering solenoid valve** or **wiring harness** (Control unit to Solenoid valve)	**P/S—1** Refer to page 10—89
	4.4V; 0V	**Wiring harness** (Control unit to Ignition coil)	**P/S—2** Refer to page 10—89
	4.4V; 0V	**Steering wheel angle sensor** or **wiring harness** (Control unit to Angle sensor)	**P/S—3** Refer to page 10—90
	4.4V; 0V	**Vehicle speed sensor** or **wiring harness** (Control unit to Meter)	**P/S—4** Refer to page 10—90
	4.4V; 0V	**Normal operation**	—
	0V	**Wiring harness** (Fuse box to Control unit or Control unit to Body ground)	**P/S—5** Refer to page 10—91

86U10X-215

Flow Chart

P/S—1	**Failure of solenoid valve or wiring harness (Control unit to Solenoid valve)**

Disconnect control unit connector. Check resistance between terminals.

Terminal	Resistance
M(LB)—N(LG)	**3.5 — 7Ω**

OK → Check control unit connector, solenoid valve connector, and joint connector for connection, and check output pattern again.

NG → Replace control unit.

NG ↓

Check the solenoid valve (Refer to page 10—91).

OK → Repair wiring harness (Control unit to Solenoid valve).

NG ↓

Replace solenoid valve.

P/S-2	**Broken wiring harness (Control unit to Coil)**

Terminale of control unit connector with engine running.

Check voltage between (YL) and D (B) terminal of control unit connector with engine running

Terminal	Voltage
L(YL)—D(B)	**Approx. 12V**

NG → Repair the wiring harness (Control unit to Ignition coil).

OK ↓

Replace control unit.

86U10X-216

P/S—3	**Failure of angle sensor or wiring harness (Control unit to Angle sensor)**

Check steering angle sensor (Refer to page 15—14).

NG → Replace angle sensor.

OK ↓

Check for continuity between each terminals of steering angle sensor and control unit harness side connector.

Terminal		Continuity
Angle sensor	Control unit	
(G)	I(G)	Yes
(GY)	H(GY)	Yes
(GW)	J(GW)	Yes

NG → Repair wiring harness (Control unit to angle sensor).

OK ↓

Replace control unit.

P/S—4	**Failure of speed sensor or wiring harness (Control unit to Meter)**

Check speed sensor (Refer to page 15—84.)

NG → Replace speed sensor.

OK ↓

Check for continuity between 1U(GR) terminal of meter connector and K(GR) terminal of control unit connector.

NG → Repair wiring harness (Control unit to Meter).

OK ↓

Replace control unit.

86U10X-217

P/S—5	**Broken wiring harness (Fuse box to Control unit, Control unit or to Body ground)**

Measure voltage between terminal of control unit connector and body ground with ignition ON.

Terminal	Voltage
E(BG)	**Approx. 12V**
D(B)	**Approx. 0V**

OK → Replace the control unit.

NG ↓

Replace METER 10A fuse or repair wiring harnesses (Fuse box to Control unit or Control unit to Body ground).

86U10X-218

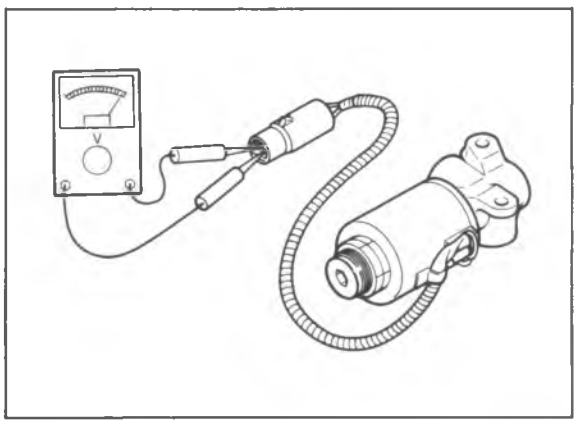

86U10X-219

Power Steering Solenoid Valve Inspection

1. Listen for actuation sound of the solenoid valve when applying 12V between A and B terminals.
2. If no sound is heard, check the resistance of the solenoid valve with an ohmmeter.

Terminals	Resistance
A — B	**3.4—6.9 Ω**

3. If there is no continuity, replace the solenoid valve.

Steering Angle Sensor Inspection

Refer to page 15—14.

Vehicle Speed Sensor Inspection

Refer to page 15—84.

86U10X-220

ELECTRICAL COMPONENTS OF 4-WHEEL STEERING (4WS)

CIRCUIT DIAGRAM

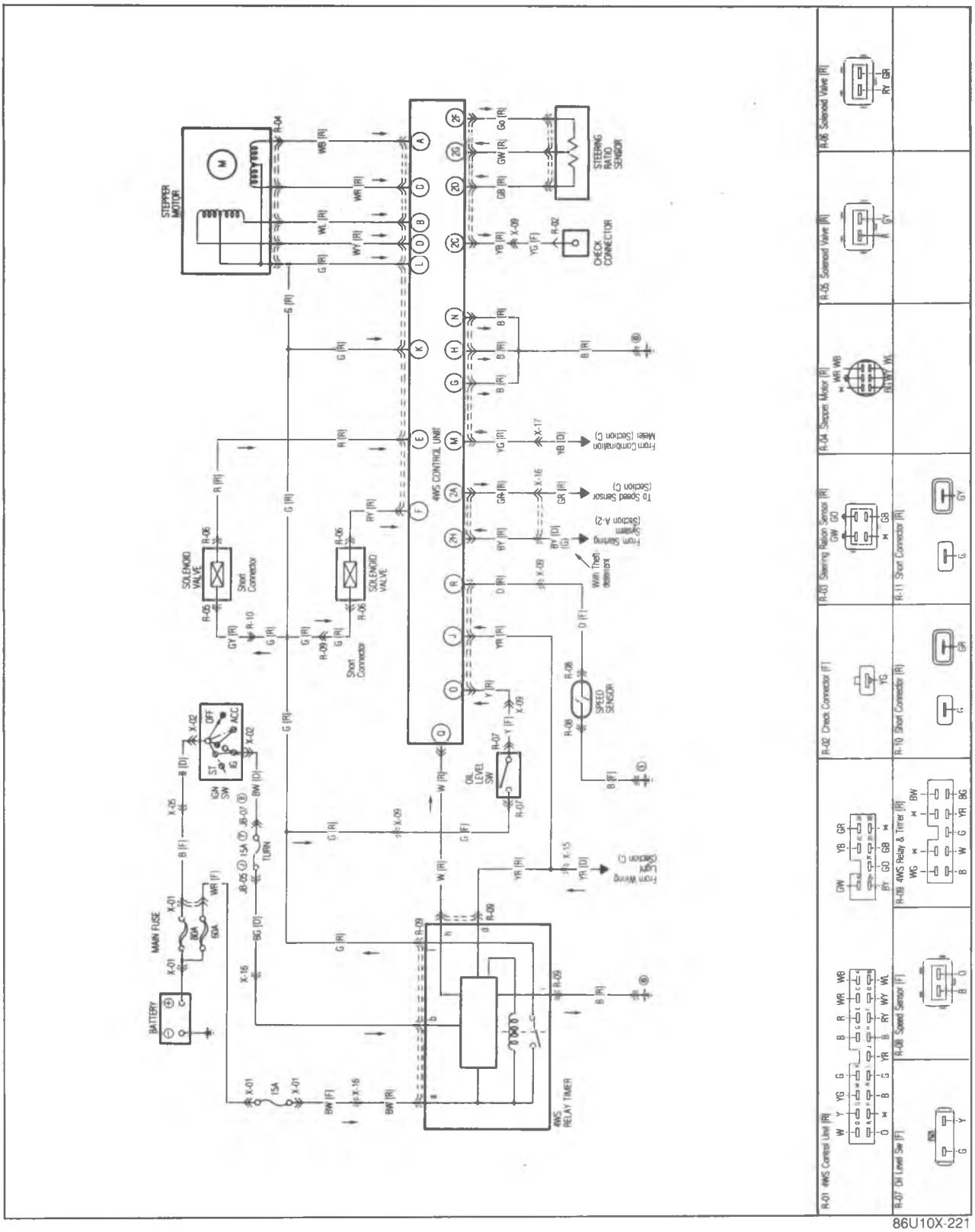

86U10X-221

Note
Refer to page 10—31 for component location.

TROUBLESHOOTING GUIDE

Self-Diagnosis Function

The four-wheel steering (4WS) control unit contains a self-diagnosis function to detect malfunctions within itself, the 4WS electrical components and circuits.
If a malfunction is detected, the control unit indicates where the problem is located and the 4WS warning light in the instrument cluster will flash for one minute with a specific pattern.
Troubleshoot the 4WS system according to the following flow chart.

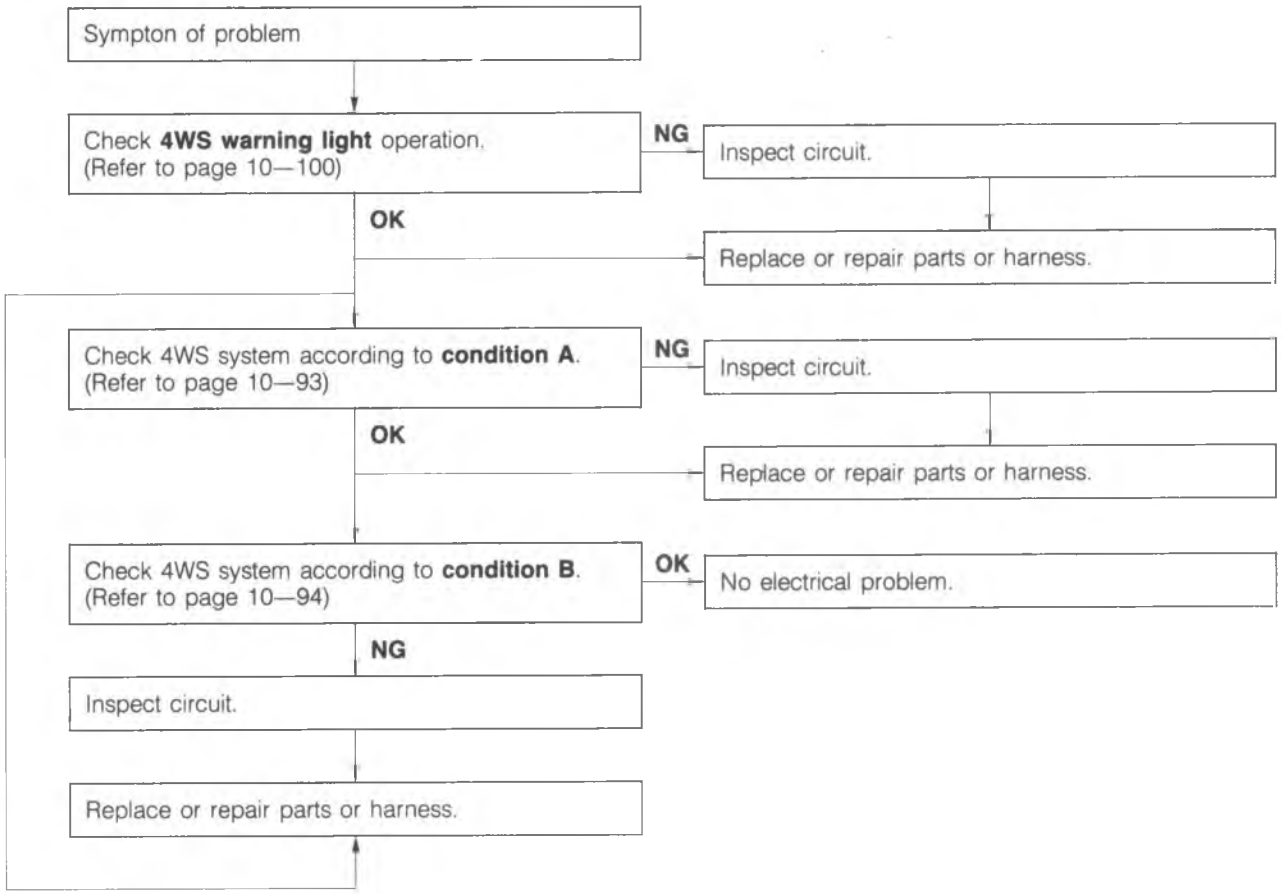

86U10X-222

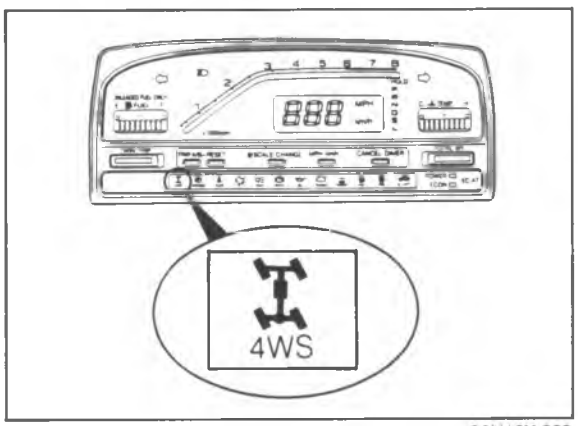

86U10X-223

TROUBLESHOOTING

Checking Condition

Condition A

1. Turn the ignition switch OFF.
2. Start the engine after the ignition switch has been OFF for at least 10 seconds, and check if the 4WS warning light flashes or illuminates within 60 seconds.
3. If flashing or illumination occurs, inspect the circuit. (Refer to page 10—94.)

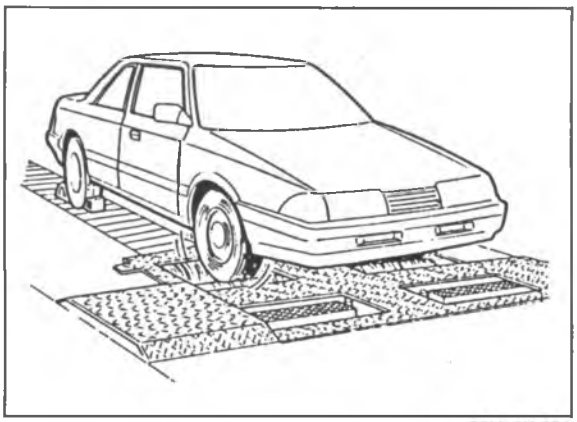

86U10X-224

Condition B

1. Place the vehicle on a chassis roller tester. Block the rear wheels, and secure it with chains.
2. Turn the ignition switch OFF.
3. Start the engine after the ignition switch has been OFF for at least 10 seconds. Put the transmission in gear and operate the vehicle at more than 40 km/h (25 mph).
4. Check if the 4WS warning light flashes or illuminates within 60 second.
5. If flashing or illumination occur, inspect the circuit by referring to the table below.

Diagnosis Output Pattern

Warning light output pattern	Malfunction	Flow chart No.
	Normal operation, control unit or wiring harness	**4WS—0**
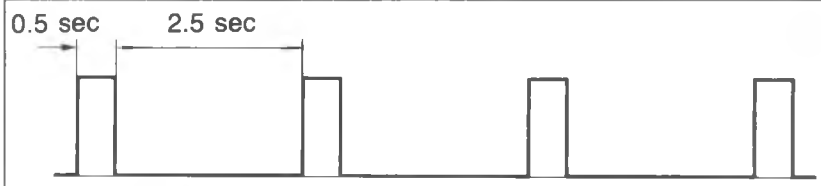	**Speed sensors or wiring harness**	**4WS—1**
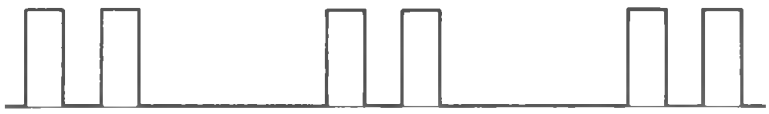	**Rear steering gear assembly**	**4WS—2**
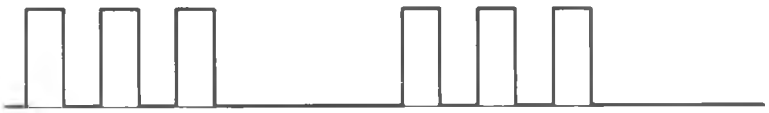	**Solenoid valve or wiring harness**	**4WS—3**
	Stepper motor or wiring harness	**4WS—4**
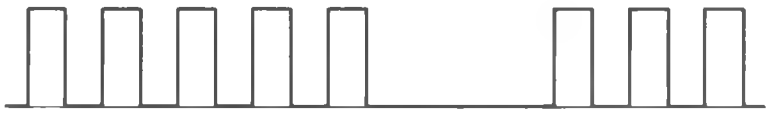	**Rear-to-front steering ratio sensor or wiring harness**	**4WS—5**

86U10X-225

Warning light output pattern	Malfunction	Flow chart No.
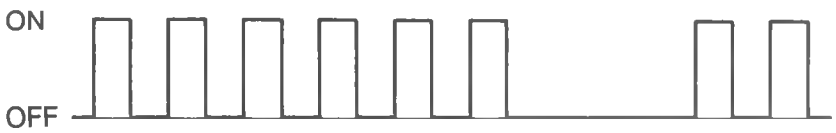	Stepper motor or wiring harness	4WS—6
	Oil leakage or oil level switch	4WS—7
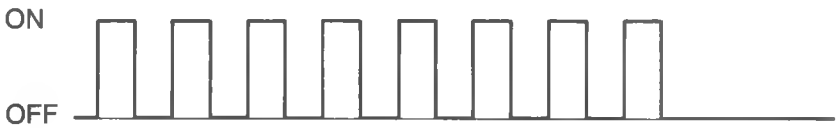	Control unit	4WS—8
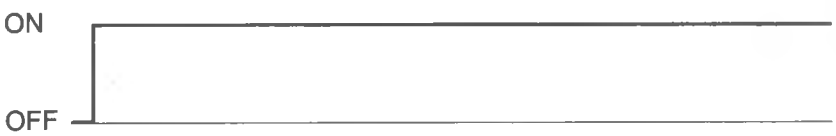	Control unit, alternator, or wiring harness	4WS—9

86U10X-226

4WS-0	**Normal operation or failure of control unit or harness**

Start engine.

Disconnect R-01 (7-pin) connector.
Check that **4WS warning light** flashes or illuminates.

YES → No electrical problem.

NO

Reconnect connector.

Check voltage between terminals and body ground.

Terminal	Voltage
G (B)	**0V**
H (B)	**0V**
K (BG)	**Approx. 12V**
L (BG)	**Approx.12V**
N (B)	**0V**

OK → Replace control unit.

NG

Repair harness. (Fuse box to Control unit or Control unit to Body ground).

4WS-1	**Failure of speed sensors or wiring harness**

Check speed sensor at transaxle.
(Referring to page 10—101)

NG → Replace speed sensor.

OK

Check for continuity between **terminal of transaxle speed sensor** and **R (O) terminal of the control unit connector**.

NG → Repair wiring harness (Control unit to Transaxle speed sensor).

Cont'd

86U10X-227

Cont'd

OK

Check **speed sensor in meter** (Refer to page 10—101).

NG → Replace speed sensor.

OK

Check for continuity between **1U (GR) terminal of meter connector** and **2A (GR) terminal of control unit connector**.

NG → Repair harness (Control unit to Meter).

OK

Replace control unit.

4WS-2	**Failure of rear steeing gear assembly**

Turn ignition switch OFF.

Check for 4WS warning light operation in conditions A and B again (Refer to page 10—100)

No flash or illumination → Momentary trouble (If 4WS warning light often flashes or illuminates, replace rear steering gear assembly.)

Flashes or illuminates

Replace rear steering gear assembly.

4WS-3	**Failure of solenoid valve or harness**

Disconnect R-01 (17-pin) connector. Check voltage between terminals and body ground with ignition switch ON.

Terminal	Voltage
E (R)	**Approx.12V**
F (RY)	**Approx. 12V**

OK → Replace control unit.

NG

Disconnect solenoid valve connector. Check for continuity between each terminals on valve side.

Terminals	continuity
A (R) — B (BG)	**Yes**
C (RY) — D (BG)	**Yes**
A (R) — D (BG)	**No**
B (BG) — C (RY)	**No**

OK → Repair harness (Fuse box to Solenoid valve or Solenoid valve to Control unit).

NG

Replace solenoid valve unit.

86U10X-228

4WS-4	Failure of stepper motor or harness

Disconnect R-01 (17-pin) connector. Check for no continuity between each terminal of harness side connector and body ground.

Terminal	Continuity
A (WB)	**No**
B (WL)	**No**
C (WR)	**No**
D (WY)	**No**
L (BG)	**No**

NG

Disconnect stepper motor connector. Check for no continuity between each terminal and body ground.

Terminal	Continuity
WB	No
WL	No
WR	No
WY	No
BG	No

OK

Repair harness (Stepper motor to Control unit).

NG

Replace rear steering gear assembly.

OK

Check for continuity between terminals of R-01 (17-pin) harness side connector.

Terminal	Continuity
A (WB) — L (BG)	**Yes**
B (WL) — L(BG)	**Yes**
C (WR) — L (BG)	**Yes**
D (WY) — L (BG)	**Yes**

NG

Disconnect stepper motor connector. Check for continuity between terminals of motor side connector.

Terminals	Continuity
WB — BG	**Yes**
WL — BG	**Yes**
WR — BG	**Yes**
WY — BG	**Yes**

OK

Repair wiring harness (Stepper motor to Control unit).

NG

Replace rear steering gear assembly.

OK

Replace control unit.

4WS-5	Failure of rear to front steering ratio sensor

Go to 4WS-2

86U10X-229

4WS-6	Failure of rear to front steering ratio sensor or harness

Start engine.

Check voltage between control unit terminal and body ground.

Terminal	Resistance
2F (GO)	**Approx. 5.0 V**

NG → Replace control unit.

OK

Check voltage between control unit terminal and body ground.

Terminal	Resistance
2G (GW)	**Approx. 4.5 V**

OK → Replace control unit.

NG

Check rear to front ratio sensor (Refer to page 10—101).

NG → Replace rear steering gear assembly.

OK

Repair harness (Control unit to Sensor).

4WS-7	Oil leakage or failure of oil level switch

Turn ignition switch OFF.
Check the level of oil in reservoir.
Fill if necessary.

Start engine.
Check that 4WS warning light flashes or illuminates.

No flash or illumination → Locate and repair oil leakage.

Flashes or illuminates

Check voltage between **0(Y)** terminal of R-01 (17-pin) connector and a body ground.

Terminal	Voltage
0 (Y)	**0 V**

OK → Replace control unit.

NG

Connect **BG** and **Y** terminal of oil level switch connector with jumper wire.

Check that warning light illuminates.

No illumination → Repair the wiring harness (Fuse to Control unit).

Illuminates

Replace power steering reservoir.

86U10X-230

4WS-8	Failure of control unit

Turn ignition switch OFF.

Start engine.
Check that warning light flashes or illuminates

No flash or illumination → Momentary problem (If 4WS warning light often flashes or illuminates, replace control unit)

flashes

Replace control unit

4WS-9	Failure of control unit, alternator, or wiring harness

Start engine.

Check voltage between terminal of control unit connector and body ground.

Terminal	Voltage
G (B)	**0V**
H (B)	**0V**
K (BG)	**Approx. 12V**
L (BG)	**Approx. 12V**
N (B)	**0V**

OK → Turn ignition switch OFF. Start engine.
Check if 4WS warning light flashes or illuminates.

- **NO** → Momentary problem (If warning light often flashes or illuminates, check battery and alternator. Replace control unit if necessary).
- **YES** → Replace control unit.

NG

Check 4WS relay and timer (Refer to page 10—101) → **NG** → Replace relay and timer

OK

Check battery, harness, and alternator.

86U10X-231

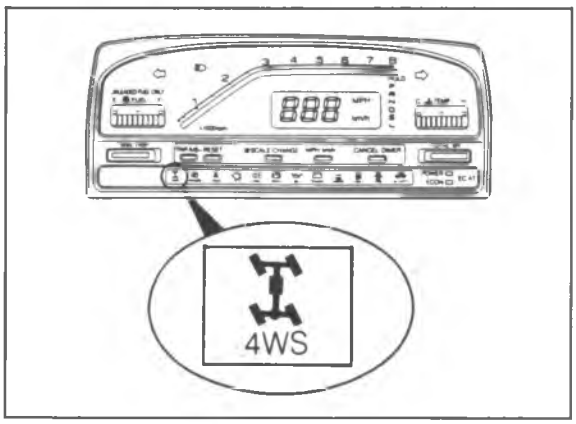

86U10X-232

4WS WARNING LIGHT

1. Turn the ignition switch OFF.
2. Turn the ignition switch ON, and check that the 4WS warning light illuminates.
3. If there is no illumination, check the warning light bulb and wiring harness.
   Replace the control unit if necessary.

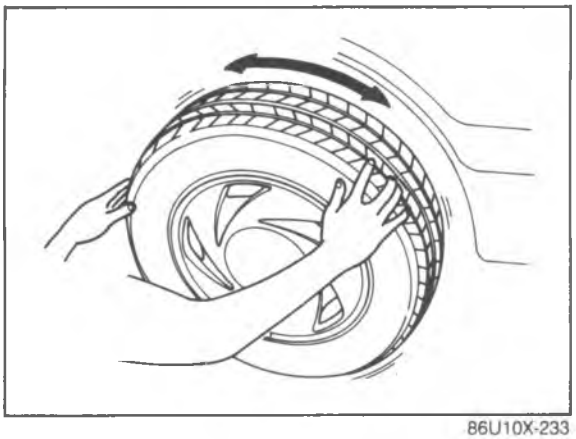

86U10X-233

SPEED SENSOR (IN METER)

1. Jack up the front of the vehicle.
2. Connect a voltmeter between **2A (GR)** terminal of the control unit connector and a body ground.
3. Start the engine. Check that periodic voltage is detected when turning the front wheels slowly.
4. If periodic voltage is not detected, check the wiring harness. Replace the speed sensor if necessary.

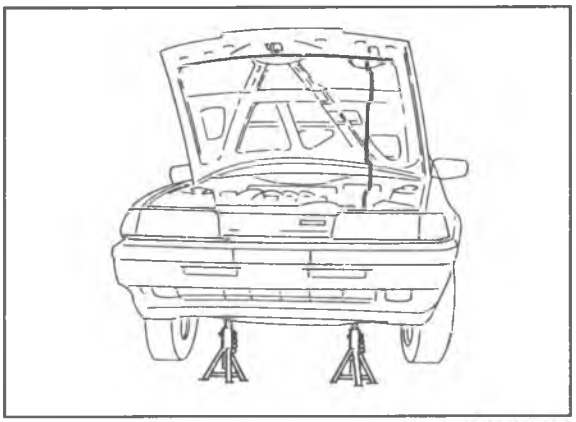

86U10X-234

SPEED SENSOR (AT TRANSAXLE)

1. Jack up the front of the vehicle.
2. Connect a voltmeter between **R (O)** terminal of the control unit connector and a body ground.
3. Start the engine. Check that periodic voltage is detected when turning the front wheels slowly.
4. If periodic voltage is not detected, check the wiring harness. Replace the speed sensor if necessary.

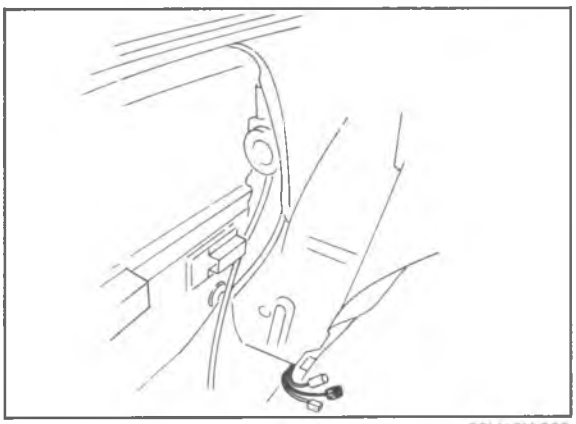

86U10X-235

REAR TO FRONT STEERING RATIO SENSOR

Check the resistance between the terminals with an ohmmeter.

Terminal	Resistance
GB—GO	**3.5—6.5 kΩ**
GB—GW	**3.2—5.9 kΩ**

If the resistance is not within specification, replace the rear steering gear assembly.

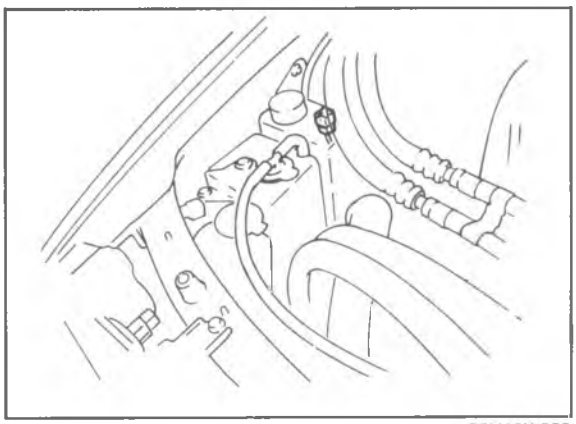

86U10X-236

OIL LEVEL SWITCH (IN P/S RESERVOIR)

Check for continuity of the switch with an ohmmeter.

Fluid level	Continuity
More than L	**No**
Less than L	**Yes**

If the continuity is not within specification, replace the P/S reservoir.

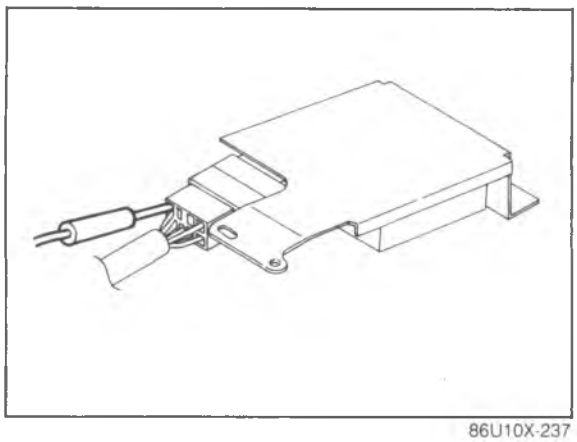

86U10X-237

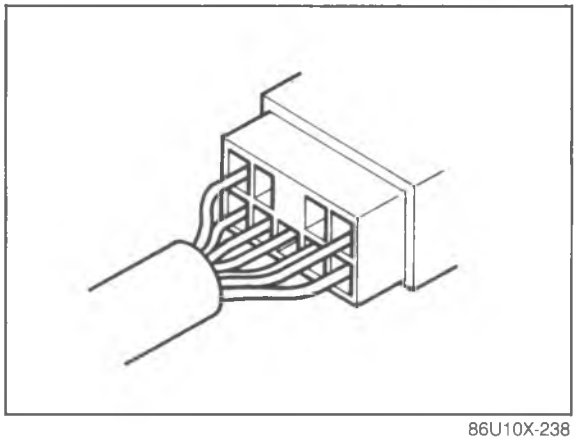

86U10X-238

RELAY AND TIMER

1. Start the engine.
2. Check voltage between each terminal of the relay and timer connector and a body ground.

Terminal	Voltage
a	12V
b	12V
d	12V
i	12V
j	0V

If the voltage is not as specified, replace the fuse or repair the harness.

3. Check voltage between each terminal and a body ground with the engine running.

Terminal	Voltage
f	12V
h	12V

4. Check that the voltage of f and h terminal is 12V for approximately 7 to 10 seconds after the ignition switch is turned OFF.
   If not, replace the relay and timer.

BRAKING SYSTEM

OUTLINE ..... 11— 2
STRUCTURAL VIEW ..... 11— 2
SPECIFICATIONS ..... 11— 4
TROUBLESHOOTING GUIDE ..... 11— 5
ON-VEHICLE MAINTENANCE ..... 11— 6
BRAKE FLUID LEVEL IN MASTER CYLINDER RESERVOIR. 11— 6
BRAKE HYDRAULIC LINE ..... 11— 6
STRUCTURAL VIEW ..... 11— 6
ON-VEHICLE INSPECTION OF BRAKE LINES ..... 11— 7
REMOVAL AND INSTALLATION OF BRAKE LINES ..... 11— 8
REPLACEMENT OF BRAKE FLUID ..... 11— 8
AIR BLEEDING ..... 11— 8
BRAKE PEDAL ..... 11—10
ON-VEHICLE INSPECTION ..... 11—10
REMOVAL ..... 11—11
INSPECTION ..... 11—12
INSTALLATION ..... 11—12
MASTER CYLINDER ..... 11—13
REMOVAL ..... 11—13
DISASSEMBLY AND ASSEMBLY ... 11—14
INSPECTION ..... 11—16
INSTALLATION ..... 11—17
POWER BRAKE UNIT ..... 11—19
ON-VEHICLE INSPECTION ..... 11—19
INSPECTION OF CHECK VALVE ... 11—21
REMOVAL ..... 11—21
DISASSEMBLY AND ASSEMBLY ... 11—22
INSPECTION ..... 11—24
INSTALLATION ..... 11—25
DUAL PROPORTIONING VALVE ..... 11—27
FUNCTION CHECK ..... 11—27
REMOVAL AND INSTALLATION .... 11—28
FRONT DISC BRAKE ..... 11—29
SIMPLE INSPECTION OF DISC PAD WEAR ..... 11—29
REPLACEMENT OF DISC PAD ..... 11—29
REMOVAL ..... 11—31
DISASSEMBLY AND ASSEMBLY ... 11—32
INSPECTION ..... 11—34
INSTALLATION ..... 11—35
REAR DISC BRAKE ..... 11—36
SIMPLE INSPECTION OF DISC PAD WEAR ..... 11—36
REPLACEMENT OF DISC PAD ..... 11—36
REMOVAL ..... 11—38
DISASSEMBLY AND ASSEMBLY ... 11—39
INSPECTION ..... 11—43
INSTALLATION ..... 11—44
REAR DRUM BRAKE ..... 11—45
REMOVAL ..... 11—45
DISASSEMBLY AND ASSEMBLY OF WHEEL CYLINDER ..... 11—48
INSPECTION ..... 11—49
INSTALLATION ..... 11—50
PARKING BRAKE ..... 11—54
ON-VEHICLE MAINTENANCE ..... 11—54
REMOVAL AND INSTALLATION OF PARKING BRAKE LEVER ..... 11—55
REMOVAL OF PARKING BRAKE CABLE ..... 11—57
INSTALLATION OF PARKING BRAKE CABLE ..... 11—58
ANTI-LOCK BRAKE SYSTEM (ABS) ..... 11—60
STRUCTURAL VIEW ..... 11—60
WIRING DIAGRAM ..... 11—61
TROUBLESHOOTING ..... 11—62
DIAGNOSIS INDICATION MODE ... 11—75
MEMORY CANCEL ..... 11—75
ABS WARNING LIGHT ..... 11—76
RELAY BOX ..... 11—76
WHEEL SPEED SENSOR ..... 11—76
SENSOR ROTOR ..... 11—79
HYDRAULIC UNIT FLUID ..... 11—83
HYDRAULIC UNIT ..... 11—83
CONTROL UNIT CIRCUIT ..... 11—88

86U11X-001

OUTLINE

STRUCTURAL VIEW

Front disc/rear drum brake

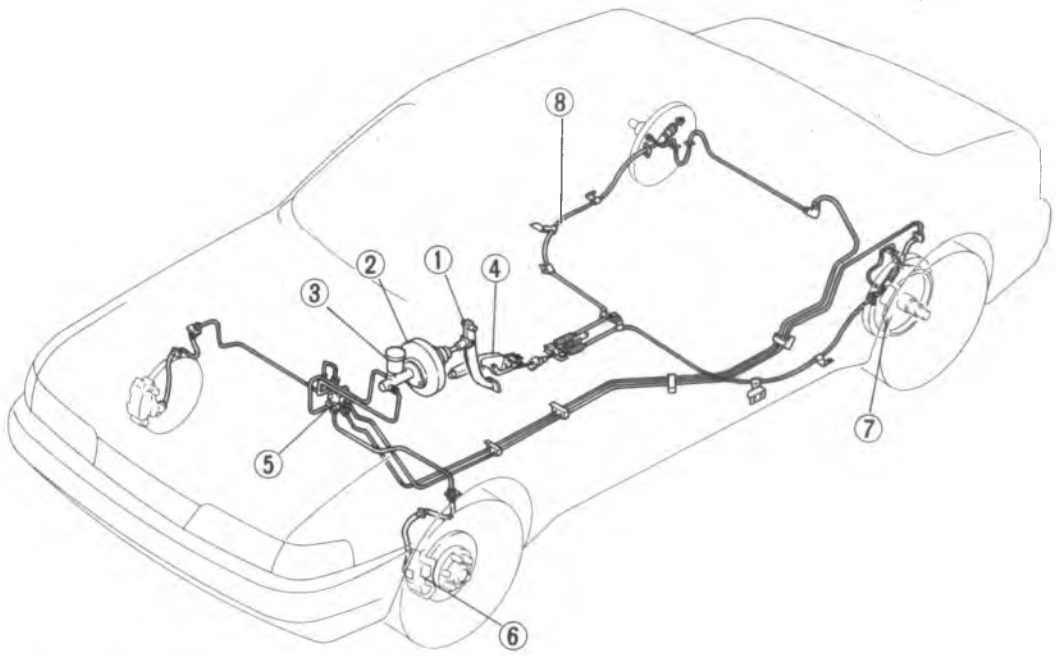

4-wheel disc brake

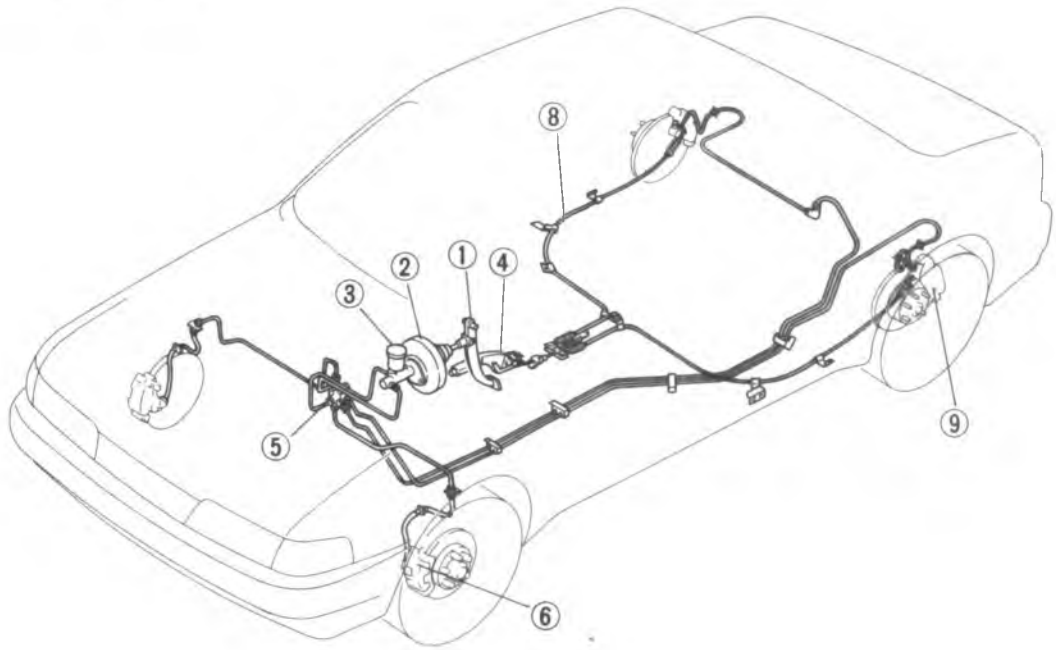

86U11X-002

1. Brake pedal
2. Power brake unit
3. Brake master cylinder
4. Parking brake lever
5. Dual proportioning valve
6. Front disc brake
7. Rear drum brake
8. Parking brake cable
9. Rear disc brake

Anti-lock brake system (ABS)

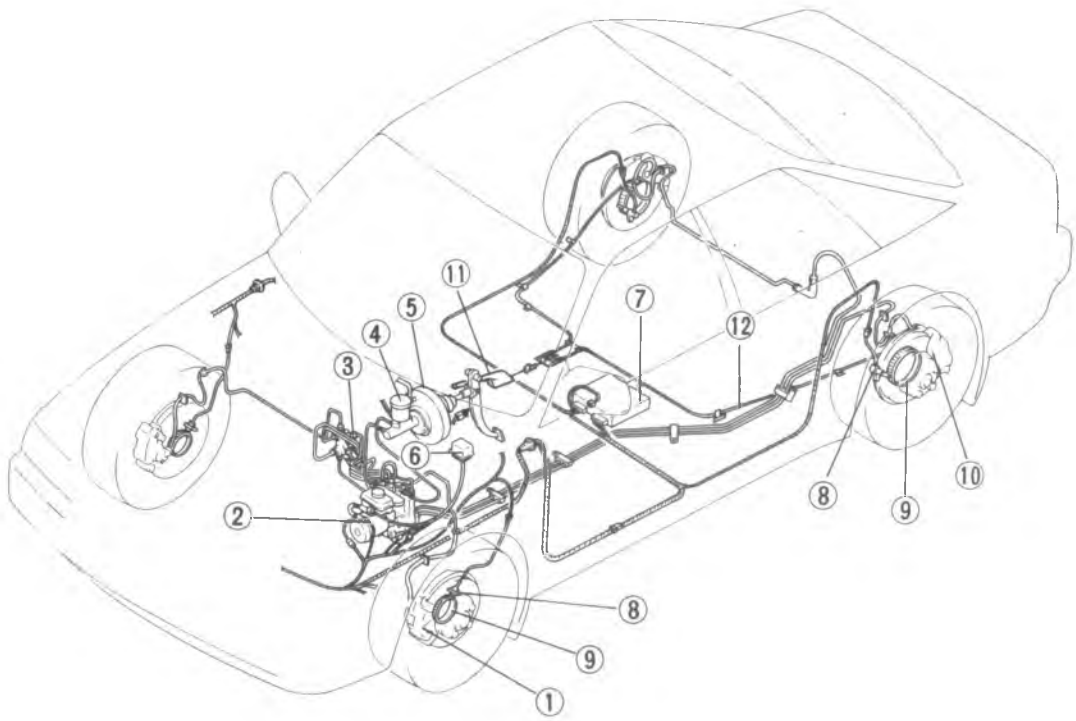

86U11X-003

1. Front disc brake
2. Hydraulic unit
3. Pipe joint
4. Master cylinder
5. Power brake unit
6. Relay box
7. Control unit
8. Wheel speed sensor
9. Sensor rotor
10. Rear disc brake
11. Parking brake lever
12. Parking brake cable

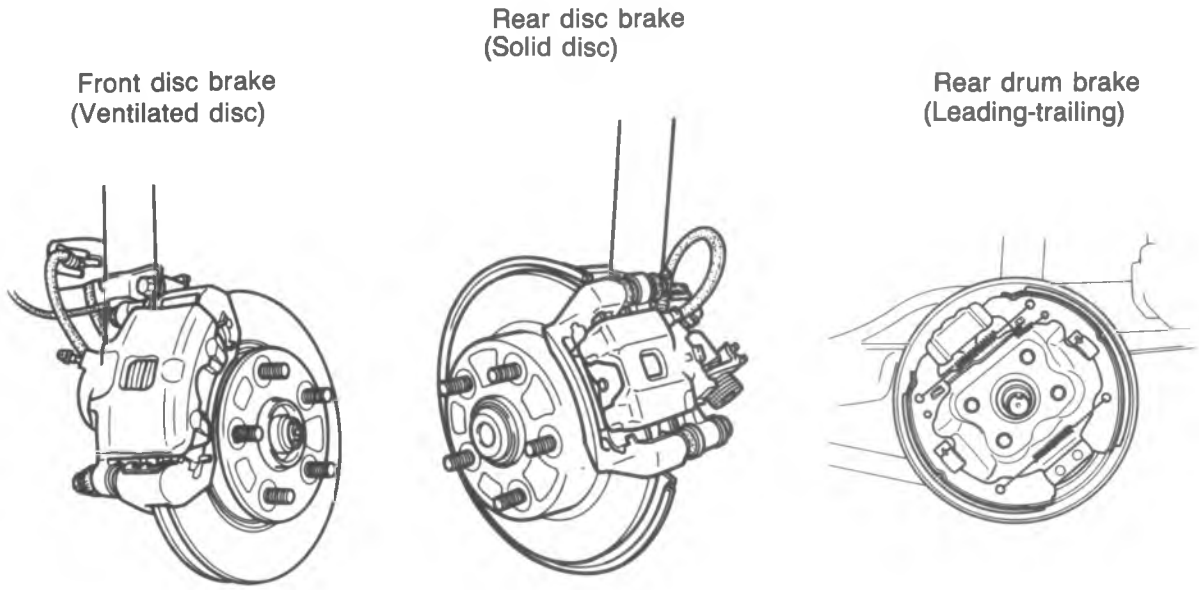

SPECIFICATIONS

Item		Specification
Brake pedal	Type	Suspended
	Pedal lever ratio	4.2
	Max. stroke mm (in)	136.5 (5.37)
Master cylinder	Type	Tandem (with level sensor)
	Cylinder inner diameter mm (in)	22.22 (0.87)
Front disc brake	Type	Mounting support, Ventilated disc
	Cylinder bore mm (in)	53.97 (2.12)
	Pad dimensions (area x thickness) mm^2 x mm (in^2 x in)	4,800 x 10 (7.44 x 0.39)
	Disc plate dimensions mm (in) (outer diameter x thickness)	264 x 24 (10.39 x 0.94)
Rear disc brake (Turbo model)	Type	Mounting support, Solid disc
	Cylinder bore mm (in)	30.2 (1.19)
	Pad dimensions (area x thickness) mm^2 x mm (in^2 x in)	2,900 x 8 (4.5 x 0.31)
	Disc plate dimensions mm (in) (outer diameter x thickness)	259 x 10 (10.2 x 0.39)
Rear drum brake (Non-Turbo model)	Type	Leading-trailing
	Wheel cylinder inner diameter mm (in)	17.46 (0.69)
	Lining dimensions mm (in) (width x length x thickness)	30 x 219.3 x 4.5 (1.18 x 8.63 x 0.18)
	Drum inner diameter mm (in)	228.6 (9.0)
	Shoe clearance adjustment	Automatic adjuster
Power brake unit	Type	Vacuum multiplier
	Diameter mm (in)	238 (9.37)
Braking force control device	Type	Dual proportioning valve or ABS (if equipped)
Brake fluid		FMVSS 116, DOT-3 or DOT-4, or SAE J1703
Parking brake	Type	Center lever (Mechanical two rear brakes)

86U11X-004

TROUBLESHOOTING GUIDE

The below table covers the normal braking system. Refer to page 11—62 for ABS system.

Problem	Possible cause	Remedy	Page
Poor braking	Leakage of brake fluid	Repair	—
	Air in system	Air bleed	11—8
	Worn pad or lining	Replace	11—29,36,45
	Brake fluid, grease, oil, or water on pad or lining	Clean or replace	11—29,36,45
	Hardening of pad or lining surface, or poor contact	Grind or replace	11—29,36,45
	Malfunction of disc brake piston	Replace	11—32,39
	Malfunction of master cylinder or wheel cylinder	Repair or replace	11—13,46
	Malfunction of power brake unit	Repair or replace	11—21
	Malfunction of check valve (vacuum hose)	Repair or replace	11—21
	Damaged vacuum hose	Replace	11—21
	Deterioration of flexible hose	Replace	—
	Malfunction of dual proportioning valve	Replace	11—28
Brakes pull to one side	Worn pad or lining	Replace	11—29,36,45
	Brake fluid, grease, oil, or water on pad or lining	Clean or replace	11—29,36,45
	Hardening of pad or lining surface, or poor contact	Grind or replace	11—29,36,45
	Abnormal wear or distortion of disc, drum, pad or lining	Repair or replace	11—29,36,45
	Malfunction of automatic adjuster	Repair or replace	11—45
	Looseness of backing plate mounting bolts	Tighten	11—50
	Malfunction of wheel cylinder	Repair or replace	11—46
	Improper adjustment of wheel bearing preload, or wear	Refer to Section 9	—
	Improper adjustment of wheel alignment	Refer to Section 10	—
	Unequal tire air pressures	Refer to Section 12	—
Brakes do not release	No brake pedal play	Adjust	11—10
	Improper adjustment of push rod clearance	Adjust	11—17
	Clogged master cylinder return port	Clean	—
	Shoe does not return properly	Adjust	—
	Wheel cylinder does not return properly	Clean or replace	11—46
	Improper return due to malfunction of piston seal of disc brake	Replace	11—32,39
	Excessive runout of disc plate	Replace	—
	Improper return of parking brake cable or improper adjustment	Repair or adjust	11—54
	Improper adjustment of wheel bearing preload	Refer to Section 9	—
Pedal goes too far (too much pedal stroke)	Air in system due to insufficient brake fluid	Add fluid and bleed air.	11—8
	Improper adjustment of pedal play	Adjust	11—10
	Worn pad or lining	Replace	11—29,36,45
	Air in system	Air bleed	11—8
Abnormal noise or vibration during braking	Worn pad or lining	Replace	11—29,36,45
	Deterioration of pad or lining	Grind or replace	11—29,36,45
	Brakes do not release	Repair	—
	Foreign material or scratches on disc plate or drum contact surface	Clean	—
	Looseness of backing plate or caliper mounting bolts	Tighten	11—50
	Damage or deviation of disc or drum contact surface	Replace	11—45
	Poor contact of pad or lining	Repair or replace	11—29,36,45
	Insufficient grease on sliding parts	Apply grease	—
Parking brake does not hold well	Excessive lever stroke	Adjust	11—54
	Brake cable stuck or damaged	Repair or replace	11—57
	Brake fluid or oil on pad or lining	Clean or replace	11—29,36,45
	Hardening of pad or lining surface, or poor contact	Grind or replace	11—29,36,45

86U11X-005

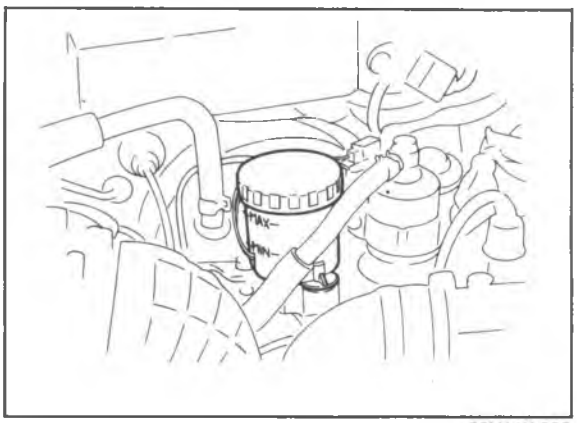

86U11X-006

ON-VEHICLE MAINTENANCE

BRAKE FLUID LEVEL IN MASTER CYLINDER RESERVOIR

Check the fluid level in the reservoir. It should be between the Max and Min lines on the reservoir.
If the fluid level is extremely low, check the brake system for leaks.

Fluid specification:
FMVSS 116, DOT-3 or DOT-4, or SAE J1703

BRAKE HYDRAULIC LINE

STRUCTURAL VIEW

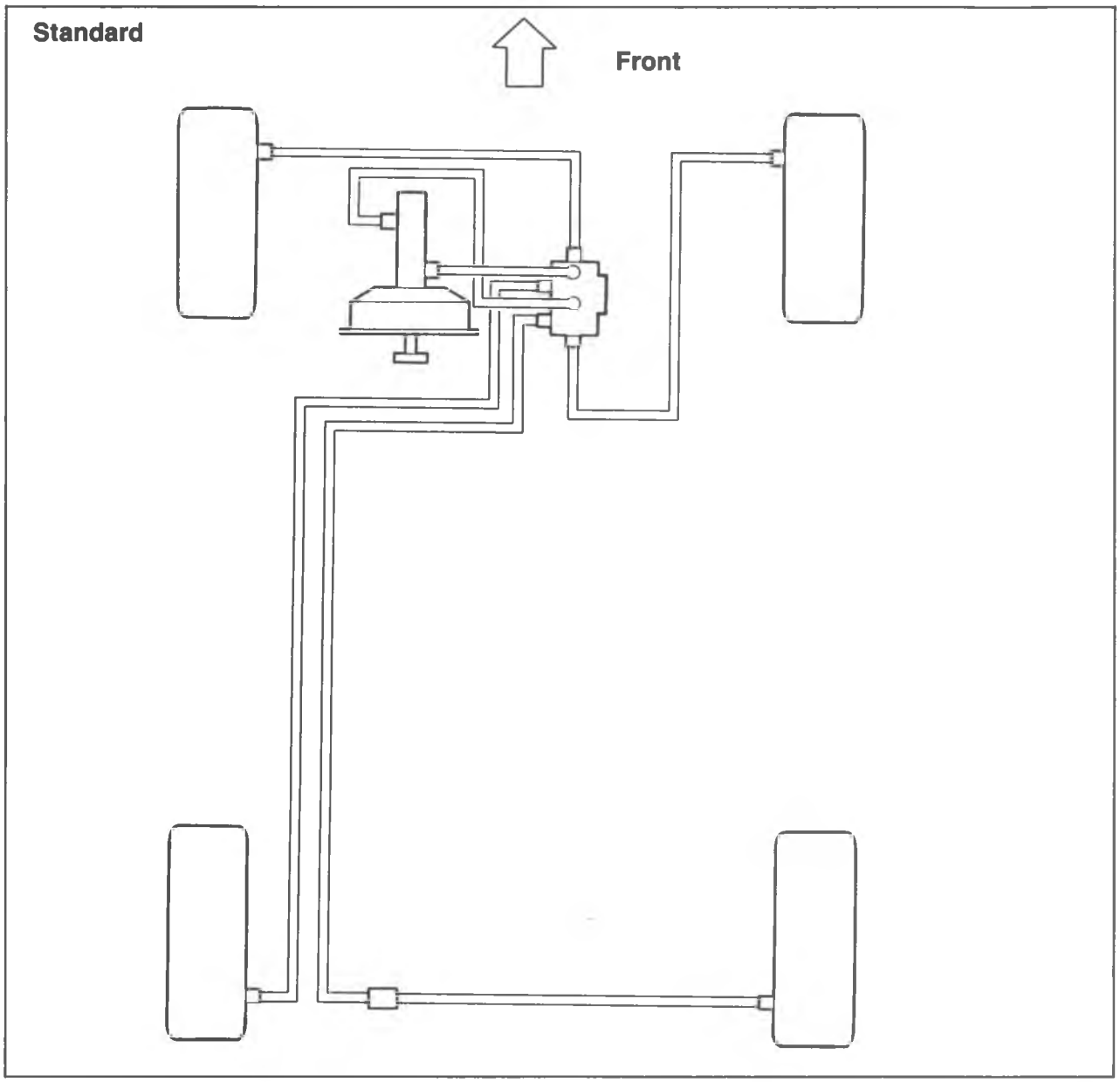

86U11X-007

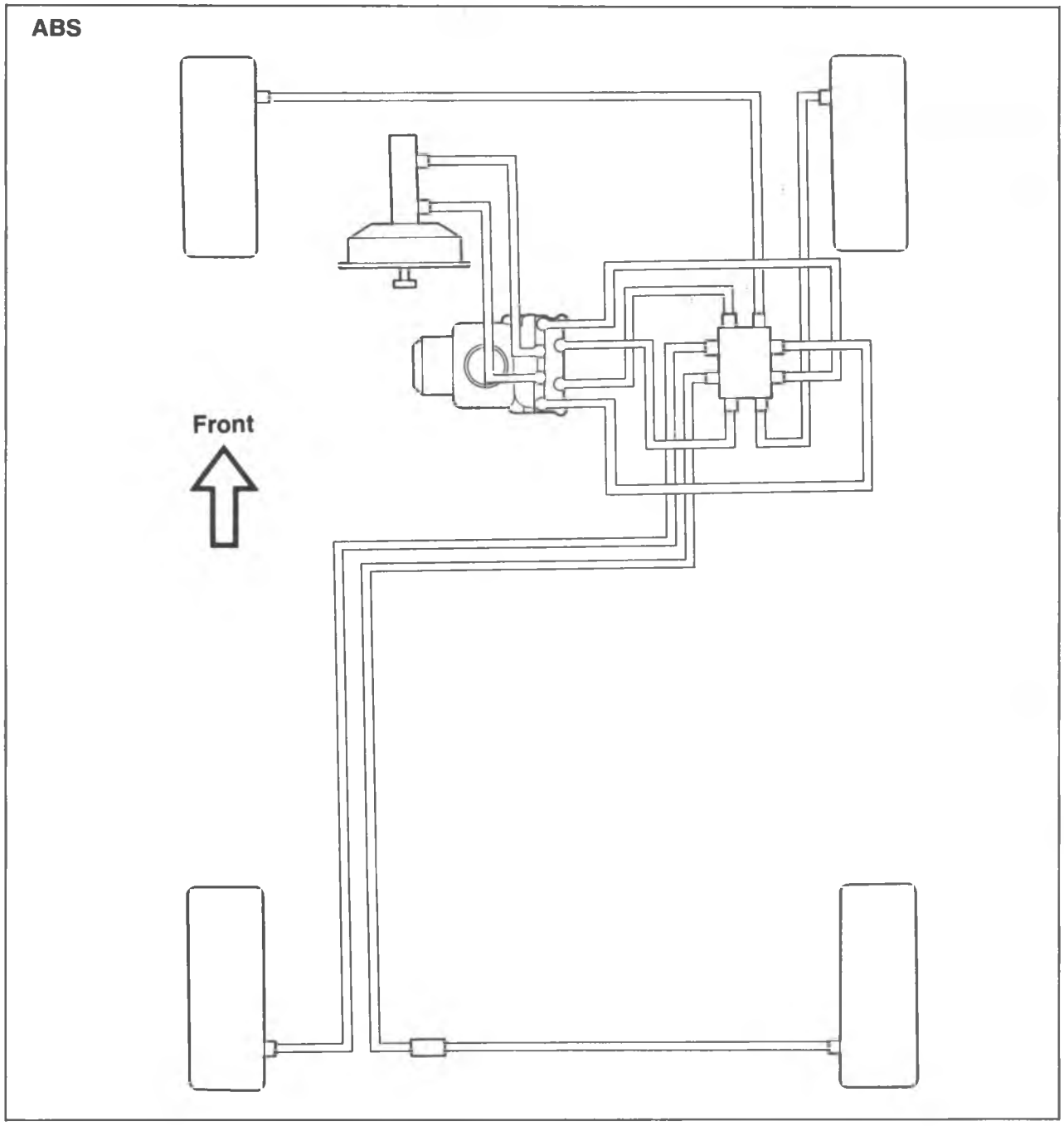

86U11X-008

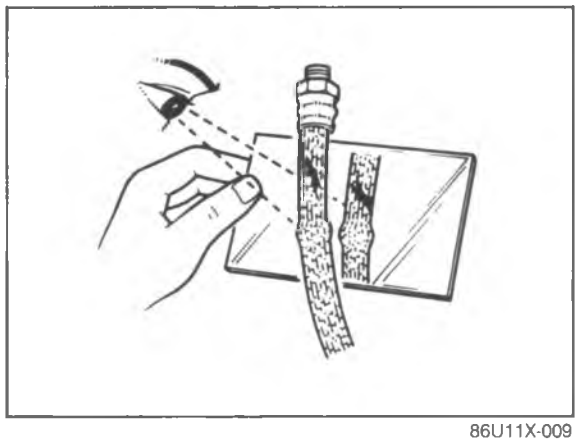

86U11X-009

ON-VEHICLE INSPECTION OF BRAKE LINES

Check the following and replace or repair any faulty parts.

1. Cracks, damage, corrosion of brake hose
2. Damage to brake hose threads
3. Scars, cracks, and swelling of flexible hose
4. Fluid leakage of all lines

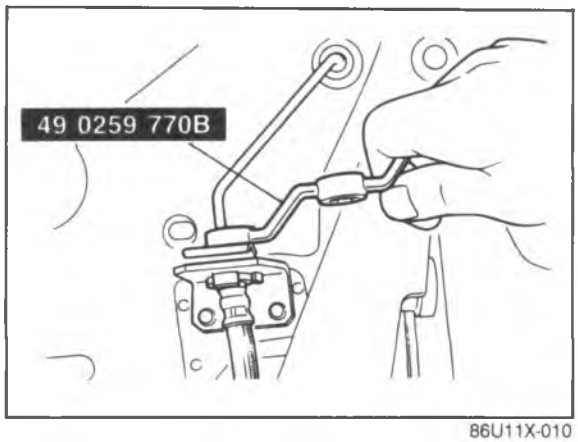

86U11X-010

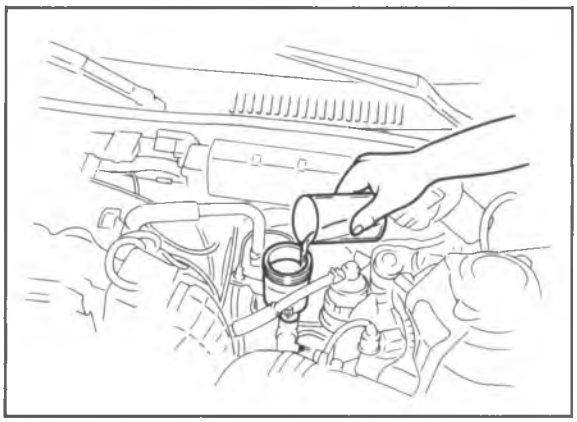

86U11X-011

REMOVAL AND INSTALLATION OF BRAKE LINES

1. Loosen or tighten the flare nut with the **SST**.

   Flare nut tightening torque: 13—22 N·m (1.3—2.2 m-kg, 9—16 ft-lb)

2. When connecting the flexible hose, do not over-tighten or twist it.
3. After installation:
   (1) Check that the hose does not contact other parts when the vehicle bounces, or when the steering wheel is turned all the way to the right or left.
   (2) Bleed the air from the brake system. (Refer to page 11—8.)

REPLACEMENT OF BRAKE FLUID

1. Remove the brake fluid from the reservoir with a suction pump.
2. Fill the reservoir with new, specified brake fluid.
3. Pump out the old brake fluid by loosening the bleeder screws (one by one) and pumping the brake pedal. (Refer to page 11—9 for details)

AIR BLEEDING

Air Bleeding Locations

After repairs have been made to the points shown, air bleed as follows:

Disassembly point			Air bleeding locations			
			Front		Rear	
			Right side	Left side	Right side	Left side
Master cylinder			*	*	*	*
Wheel cylinder or caliper	Front	Right side	*	—	—	—
		Left side	—	*	—	—
	Rear disc	Right side	—	—	*	—
		Left side	—	—	—	*
	Rear drum	Right side	—	—	*	—
		Left side	—	—	—	*
Dual proportioning valve			*	*	*	*
Hydraulic unit (ABS)			*	*	*	*

ABS: Anti-lock Brake System

86U11X-012

*: Indicates where air bleeding is necessary

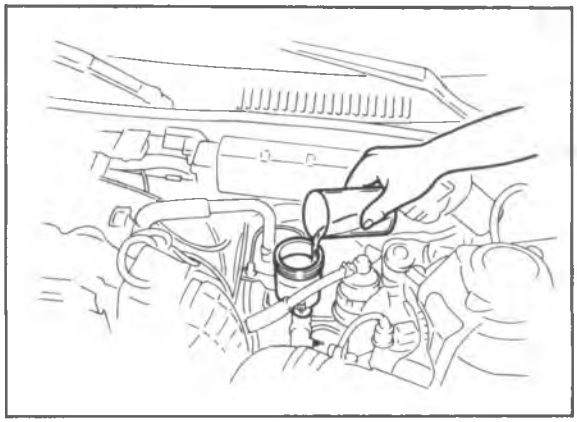

86U11X-013

Procedure

1. Jack up the vehicle and support it with safety stands.
2. Fill the reservoir with brake fluid. Be sure that it is at least half full at all times during the air bleeding process.

Caution

a) Be careful not to spill brake fluid onto a painted surface.
b) Use only the specified brake fluid. Do not mix it with any other type.

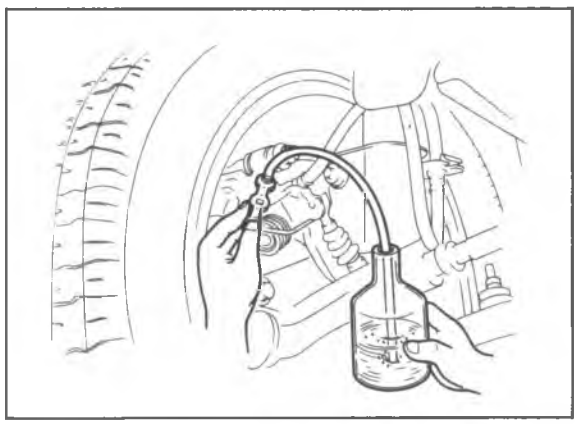

86U11X-014

3. Remove the bleeder cap; then connect one end of a transparent vinyl tube to the bleeder screw and place the other end in a receptacle.
4. Have an assistant depress the brake pedal a few times, and then hold it in the depressed position.
5. Loosen the bleeder screw, drain out he fluid, and retighten the bleeder.

Note

a) The two people should stay in voice contact with each other.
b) Be sure the pedal remains depressed until the bleeder is tightened.

6. Repeat steps 4 and 5 until no more air is discharged.

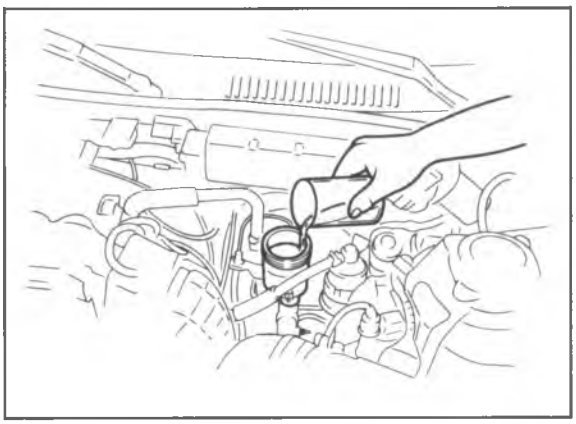

86U11X-015

7. Tighten the bleeder screw, and check that there is no fluid leakage.

Bleeder screw tightening torque:
6—9 N·m (60—90 cm-kg, 52—78 in-lb)

Caution

Be sure to clean away any spilled fluid with rags.

8. Add brake fluid to the reservoir up to the specified level.

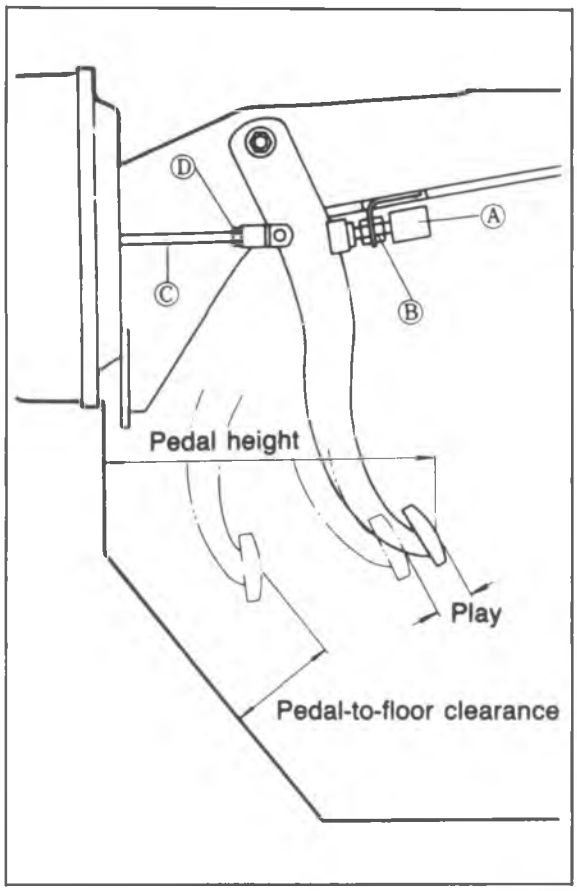

86U11X-016

BRAKE PEDAL

ON-VEHICLE INSPECTION

Pedal Height

Inspection

Check that the distance from the center of the upper surface of the pedal pad to the firewall is as specified.

Pedal height: 222 $^{+5}_{-0}$ mm (8.74 $^{+0.20}_{-0}$ in)

Adjustment

1. Disconnect the stop light switch connector.
2. Loosen locknut B and turn switch A until it does not contact the pedal.
3. Loosen locknut D and turn rod C to adjust the height.
4. Adjust the pedal free play and tighten locknut D.
5. Turn the stop light switch until it contacts the pedal; then turn an additional 1/2 turn. Tighten locknut B.

Locknut B tightening torque:
14—18 N·m (1.4—1.8 m-kg, 10—13 ft-lb)
Locknut D tightening torque:
24—34 N·m (2.4—3.5 m-kg, 17—25 ft-lb)

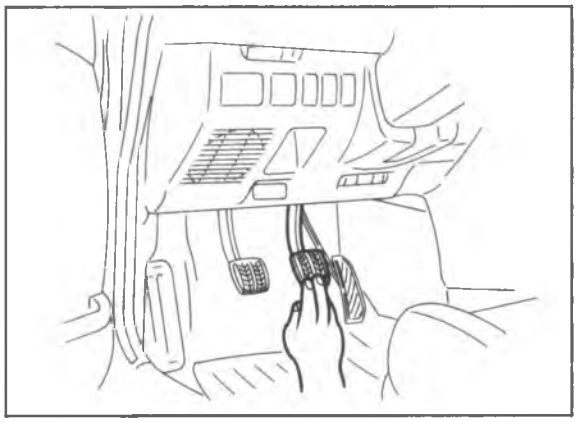

86U11X-017

Pedal Play

Inspection

1. Depress the pedal a few times to eliminate the vacuum in the system.
2. Depress the pedal again by hand with a force of 20 N (2 kg, 4.4 lb), and check the free play. (Until the valve plunger contacts the stopper plate = until the power piston begins to move.)

Pedal play: 4—7 mm (0.16—0.28 in)

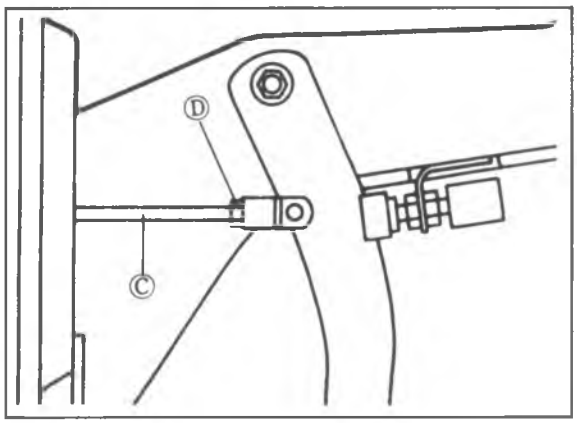

86U11X-018

Adjustment

Loosen the locknut D of the operating rod C; then turn the rod to adjust the free play.

Locknut D tightening torque:
24—34 N·m (2.4—3.5 m-kg, 17—25 ft-lb)

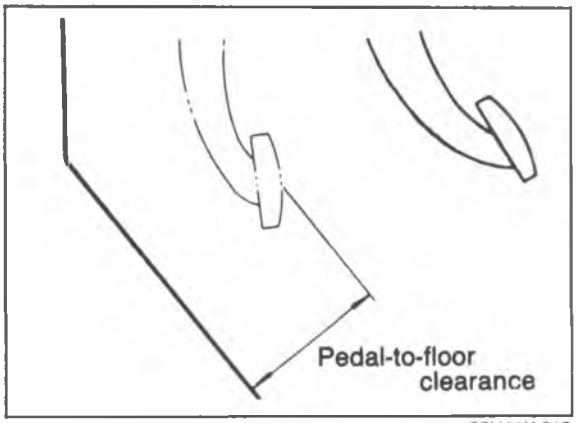

86U11X-019

Pedal-to-Floor Clearance Inspection

Check that the distance from the floor panel to the center of the upper surface of the pedal pad is as specified when the pedal is depressed with a force of 589 N (60 kg, 132.3 lb).

Pedal-to-floor clearance:
95 mm (3.7 in) min.

If the distance is less than specified, check for the following problems.

1. Air in brake system
2. Malfunction of automatic adjuster (rear drum brakes)
3. Worn shoes or pads

REMOVAL

Remove in the sequence shown in the figure.

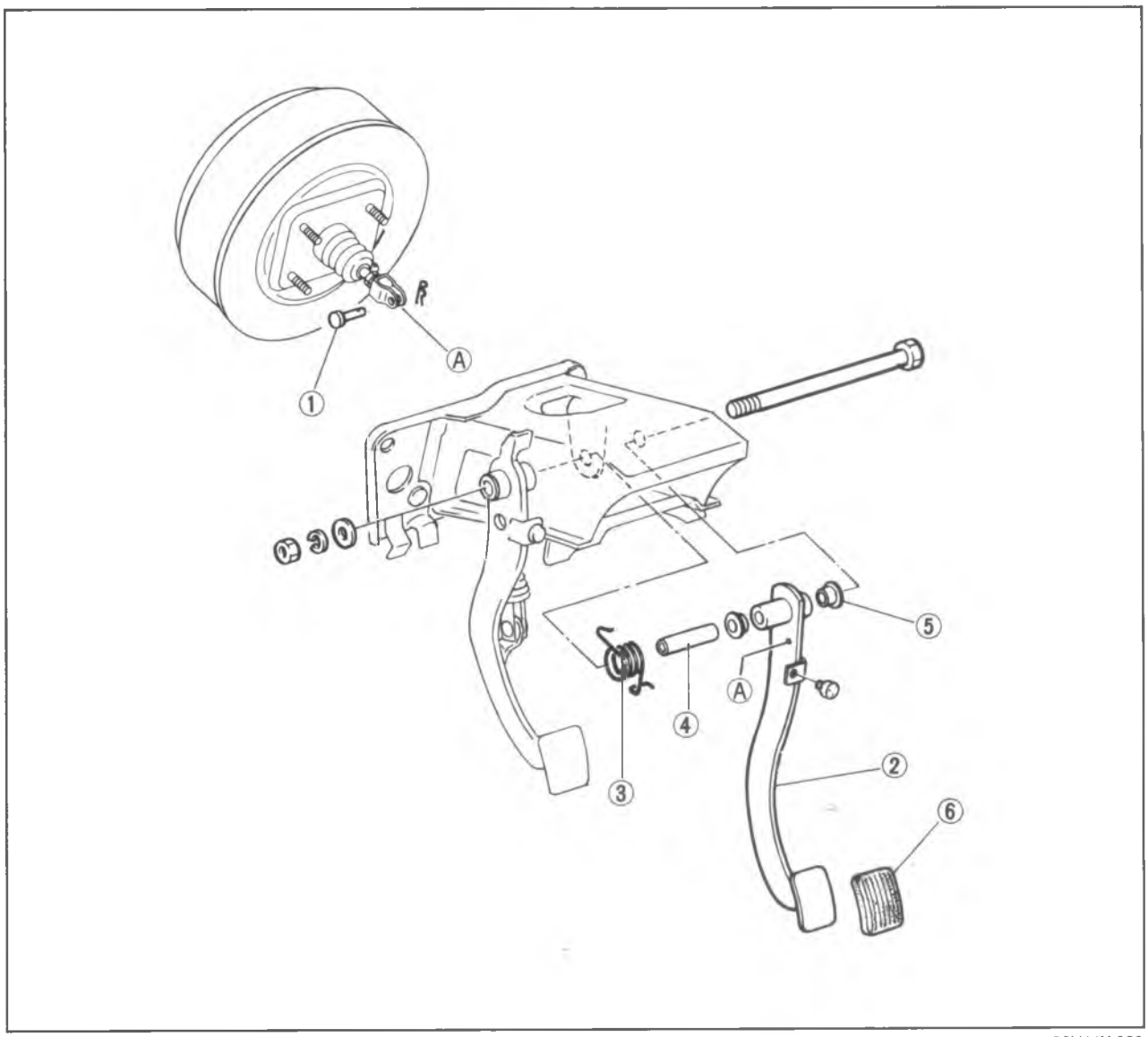

86U11X-020

1. Clevis pin
2. Brake pedal
3. Return spring
4. Guide pipe
5. Bushing
6. Brake pad

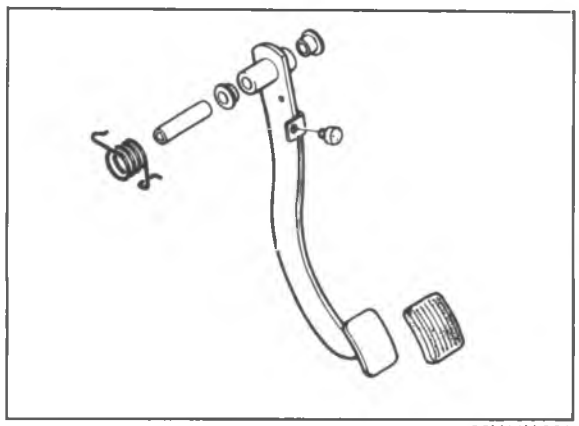

86U11X-021

INSPECTION

Check the following and replace or repair any faulty parts.

1. Pedal pad for wear or damage
2. Bushing for wear
3. Bolt for bending
4. Pedal for bending
5. Return spring for weakness or damage

INSTALLATION

1. Install in the reverse order of removal.
2. Tighten all nuts and bolts, referring to torque specifications.
3. After installation:
   Check and adjust the pedal height and play. (Refer to page 11—10.)

Torque specifications

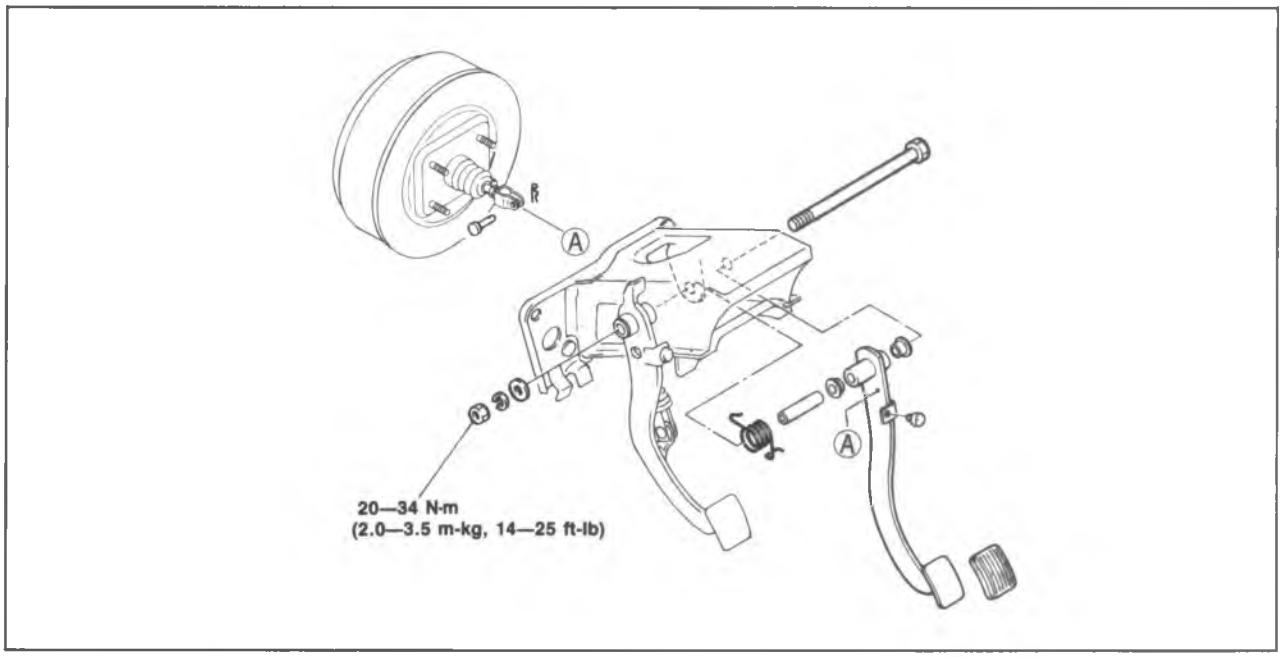

86U11X-022

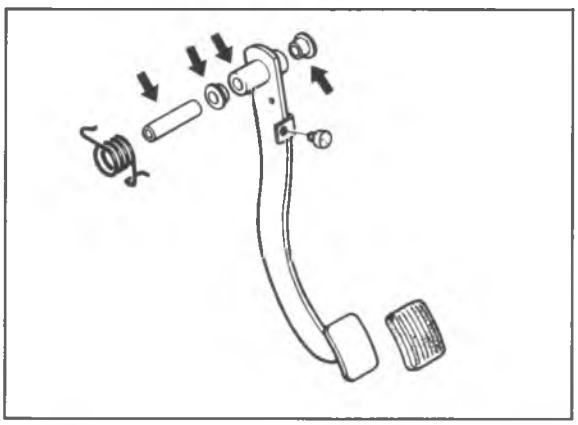

86U11X-023

Installation Note

Application of grease

Apply grease to the following parts:

(1) Inner and outer surfaces of bushing
(2) Outer surface of guide pipe
(3) Contact surface of clevis pin and spring

MASTER CYLINDER

REMOVAL

Remove in the sequence shown in the figure, referring to removal note for the specially marked parts.

Caution
Brake fluid will damage painted surfaces. If it does get on a painted surface, wipe it off immediately.

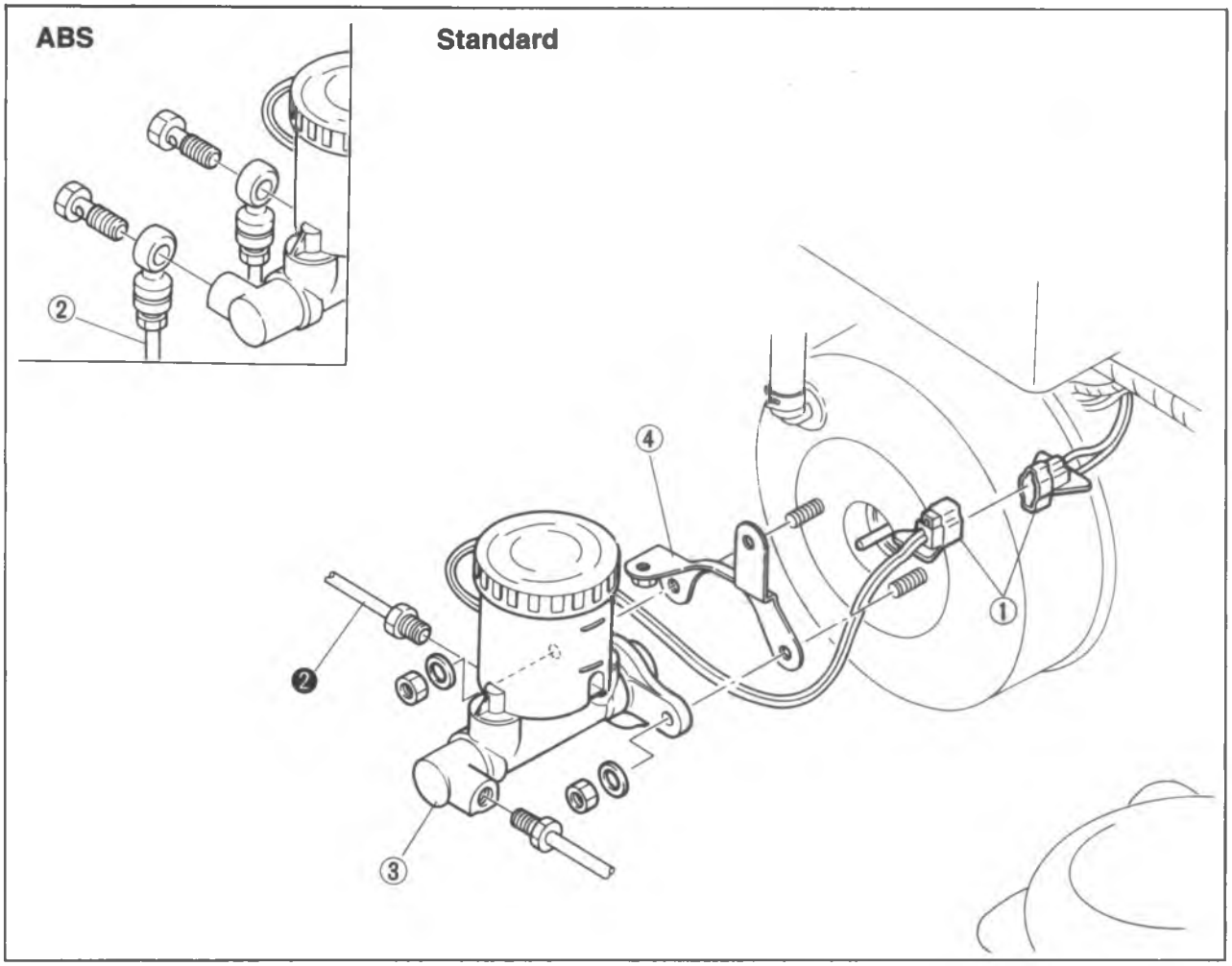

86U11X-024

1. Fluid level sensor connector
2. Brake pipe
3. Master cylinder
4. Clutch pipe holder (MTX, ABS)

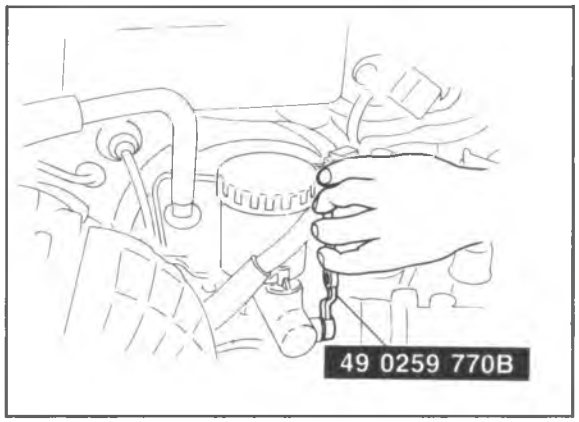

86U11X-025

Removal Note
Brake pipe (Standard)

1. Place rags under the master cylinder to prevent brake fluid from dripping on painted surfaces.
2. Disconnect the brake pipe from the master cylinder with the **SST**.

DISASSEMBLY AND ASSEMBLY

1. Pour out the brake fluid.
2. Disassemble in the sequence shown in the figure, referring to disassembly note for the specially marked parts.
3. Assemble in the reverse order of disassembly, referring to assembly note for the specially marked parts.

Caution

a) Be careful not to let foreign material into the master cylinder during repairs.
b) Do not scratch the inside of the cylinder or the outer surface of the piston.

Note

The primary piston assembly is not repairable. Replace it as an assembly.

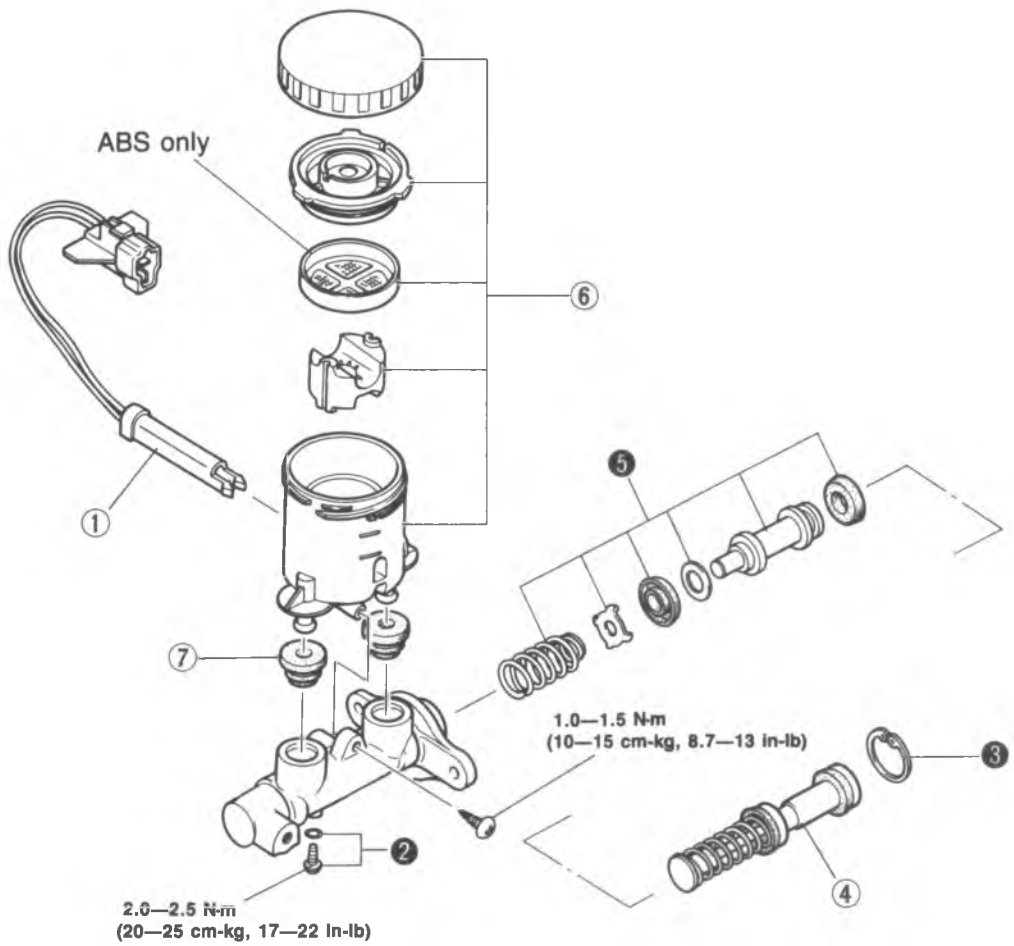

86U11X-026

1. Fluid level sensor
2. Stopper screw and O-ring
3. Snap ring
4. Primary piston assembly
5. Secondary piston assembly
6. Reservoir assembly
7. Bushing

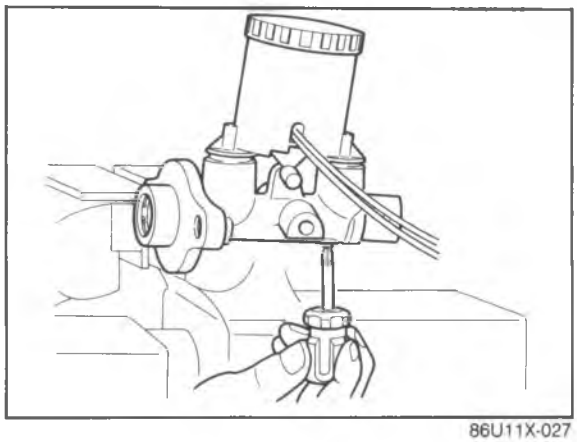

86U11X-027

Disassembly Note
Stopper screw
Remove the stopper screw with a Phillips screwdriver.

Note
Prepare a suitable container for the brake fluid to drain into.

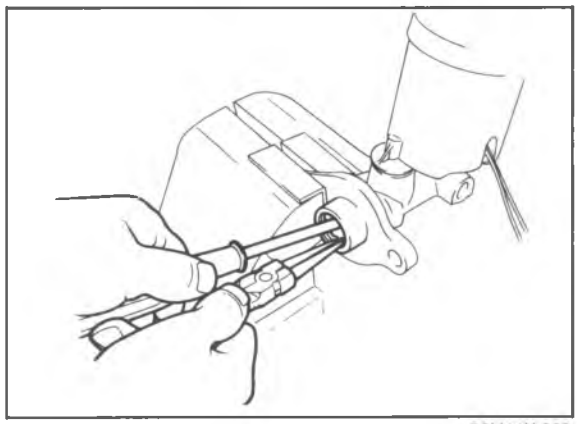

86U11X-028

Snap ring
Push the primary piston with a Phillips screwdriver and remove or install the snap ring with snap ring pliers.

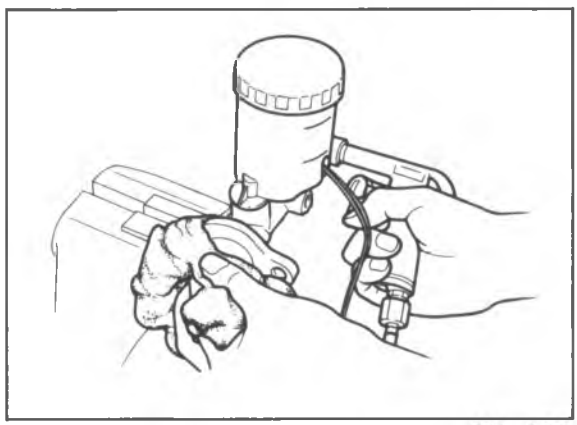

86U11X-029

Secondary Piston Assembly
Remove the secondary piston assembly by gradually blowing compressed air into the cylinder.

Caution
Use a rag to catch the secondary piston assembly when applying compressed air.

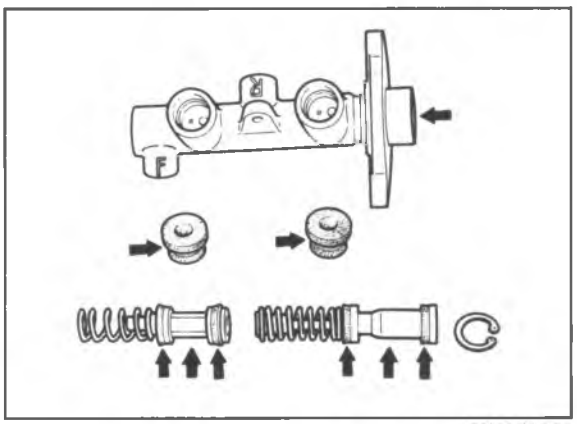

86U11X-030

Assembly Note
Application of brake fluid
Before assembly, apply brake fluid to the following parts:
1. Cylinder inner surface
2. Piston
3. Piston cups
4. Bushings

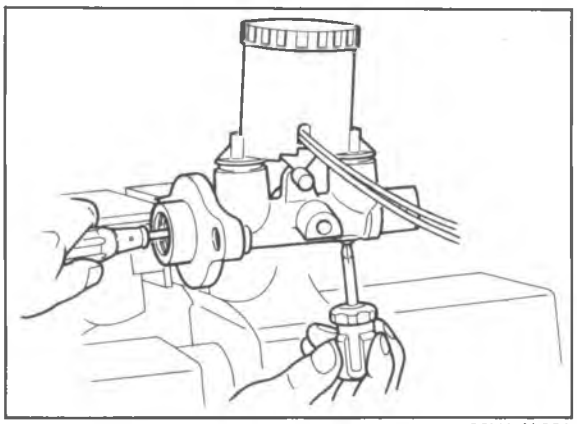

86U11X-031

Stopper screw

1. Push the primary piston assembly all the way in with a Phillips screwdriver.
2. Tighten the stopper screw.
3. Push and release the screwdriver to verify that the position of the stopper screw is correct.

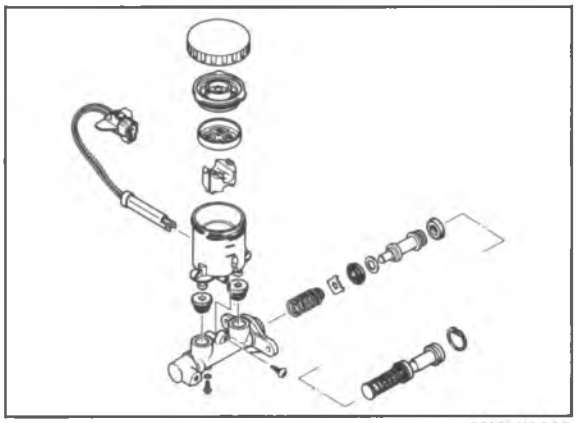

86U11X-032

INSPECTION

Check the following and replace any faulty parts.

1. Piston and cylinder bore for abnormal wear, rust and damage
2. Springs for weakness and damage
3. Reservoir for damage and deformation

INSTALLATION

1. Install in the reverse order of removal.
2. Tighten all nuts and bolts to the specified torque, referring to torque specifications.
3. After installation:
   (1) Fill the reservoir with the specified fluid.
   (2) Bleed air from the system. (Refer to page 11—8.)
   (3) Check each part for fluid leakage.

Torque specifications

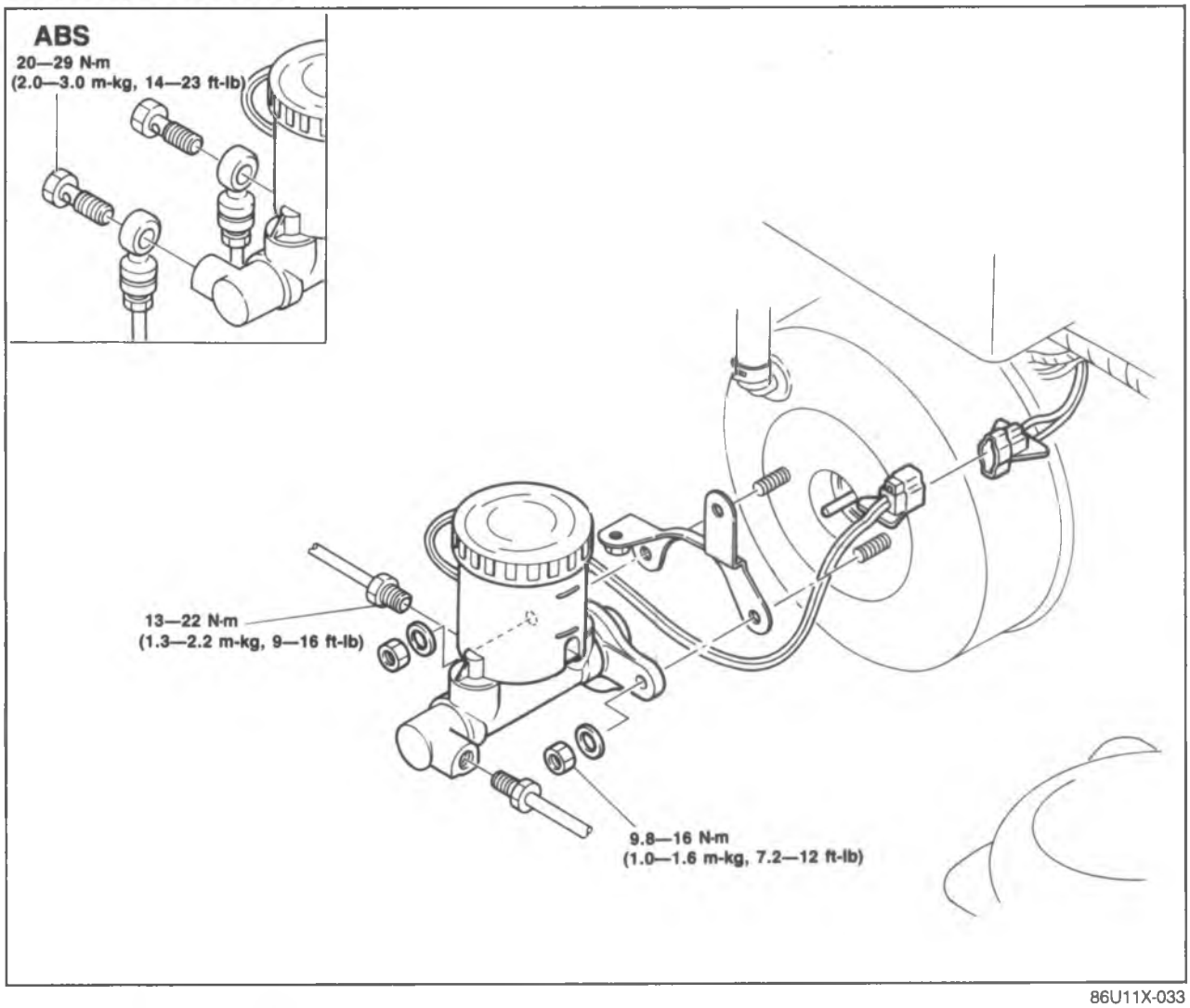

86U11X-033

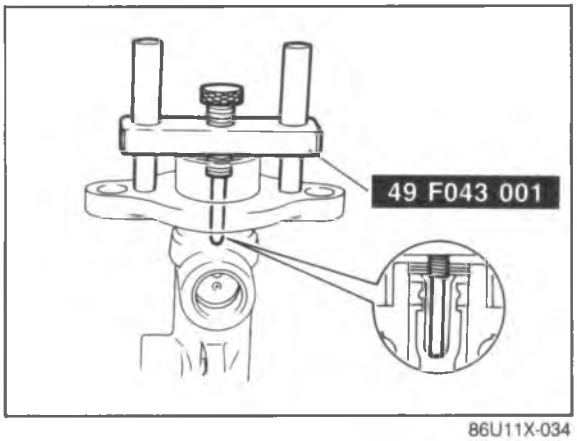

86U11X-034

Installation Note

Piston to push rod clearance

Before installing the master cylinder, check the clearance between the piston of the master cylinder and the push rod of the power brake unit as follows.

1. Place the **SST** on the top of the master cylinder; then turn the adjust bolt until it contacts the bottom of the push rod hole in the piston.

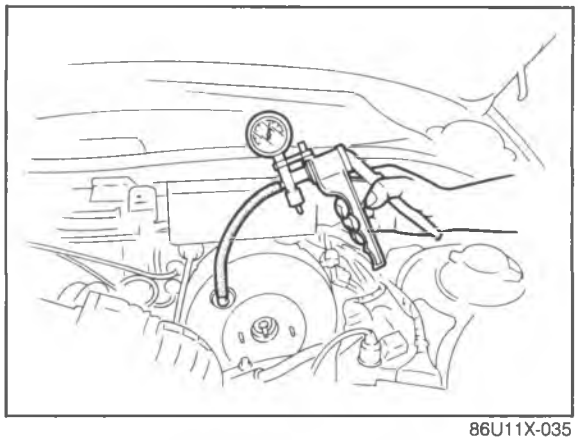

86U11X-035

2. Apply **500 mm-Hg (19.7 in-Hg)** vacuum to the power brake unit with a vacuum pump.

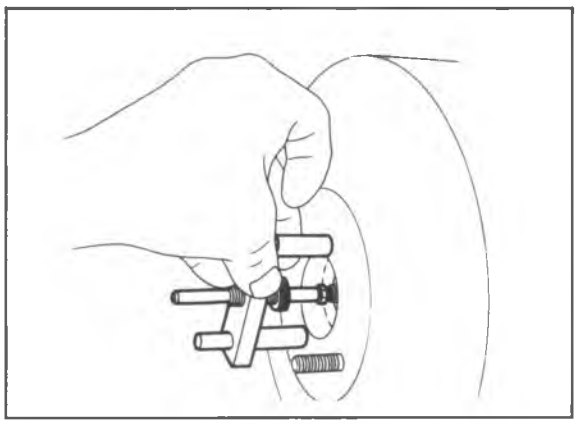

86U11X-036

3. Invert the **SST** used in step 1, and place it on the power brake unit.

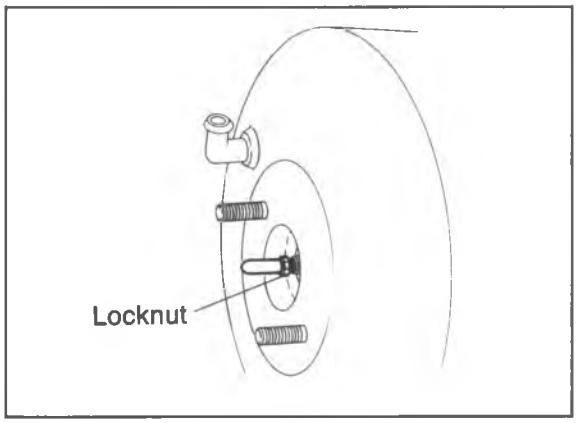

86U11X-037

4. Check the clearance between the end of the gauge and the push rod of the power brake unit. If it is not **0 mm**, loosen the push rod locknut and turn the push rod to adjust.

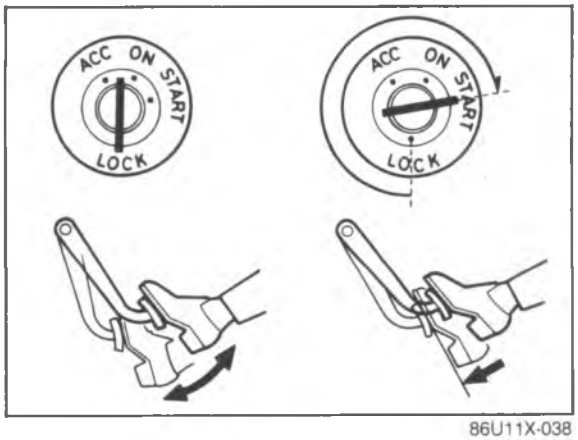

86U11X-038

POWER BRAKE UNIT

FUNCTION CHECK

Simple Method

First step

1. With the engine stopped, depress the pedal a few times.
2. With the pedal depressed, start the engine
3. If immediately after the engine starts the pedal moves down slightly, the unit is operating.

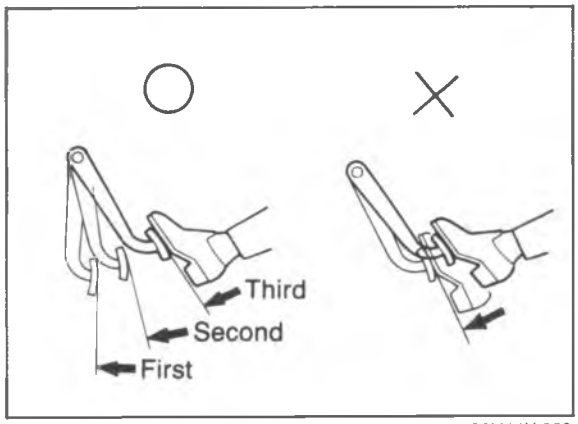

86U11X-039

Second step

1. Start the engine.
2. Stop the engine after it has run for **1 or 2 minutes**.
3. Depress the pedal with the usual force.
4. If the first pedal stroke is long and becomes shorter with subsequent strokes, the unit is operating.
5. If a problem is found, inspect for damage of the check valve or vacuum hose, and examine the installation condition. Repair if necessary, and inspect it once again.

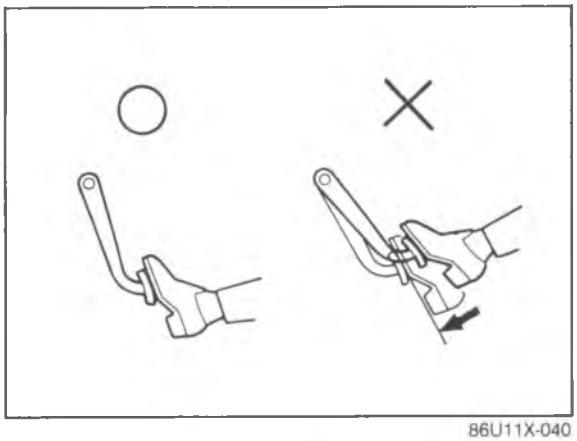
86U11X-040

Third step

1. Start the engine.
2. Depress the pedal with the usual force.
3. Stop the engine with the pedal still depressed.
4. Hold the pedal down for **about 30 seconds**.
5. If the pedal height does not change, the unit is operating.
6. If there is a problem, check for damage to the check valve or vacuum hose, and check the connection. Repair if necessary, and check once again.

If the nature of the problem is still not clear after following the 3 steps above, follow the more detailed check described in "Method using tester"

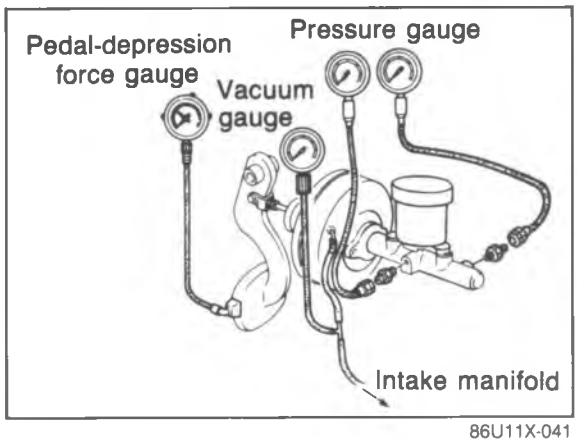

86U11X-041

Method Using Tester

Connect a pressure gauge, vacuum gauge, and pedal depression force gauge as shown in the figure. After bleeding the air from the pressure gauge, conduct the test as described in the 3 steps below.

Note
Use commercially available gauges and pedal depression force gauge.

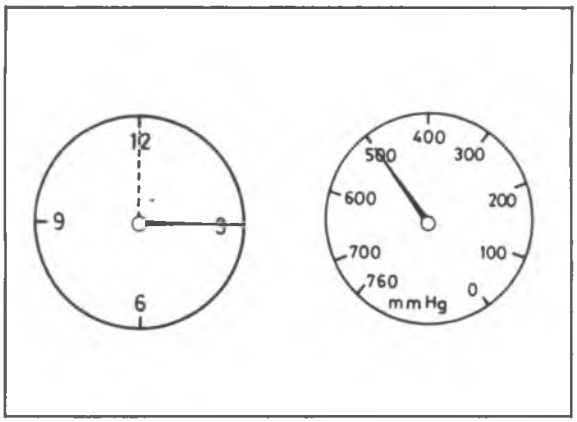

69G11X-039

Checking for Vacuum Loss: Unloaded Condition

1. Start the engine.
2. Stop the engine when the vacuum gauge reading reaches **500 mm-Hg (19.7 in-Hg)**.
3. Observe the vacuum gauge for **15 seconds**. If the gauge shows **475 ~ 500 mm-Hg (18.7 ~ 19.7 in-Hg)**, the unit is operating.

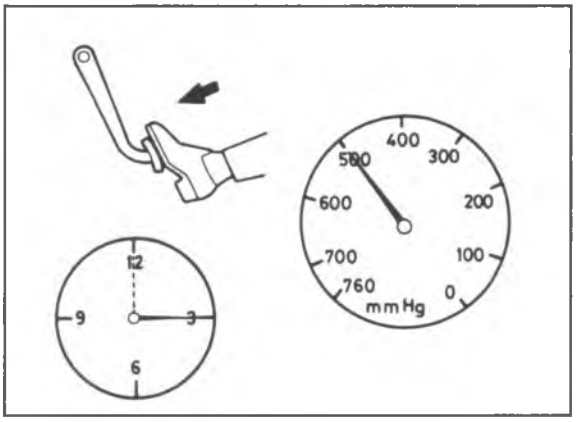

86U11X-042

Loaded Condition

1. Start the engine.
2. Depress the brake pedal with a force of **196 N (20 kg, 44 lb)**.
3. With the brake pedal depressed, stop the engine when the vacuum gauge reading reaches **500 mm-Hg (19.7 in-Hg)**.
4. Observe the vacuum gauge for **15 seconds**. If the gauge shows **475 ~ 500 mm-Hg (18.7 ~ 19.7 in-Hg)**, the unit is operating.

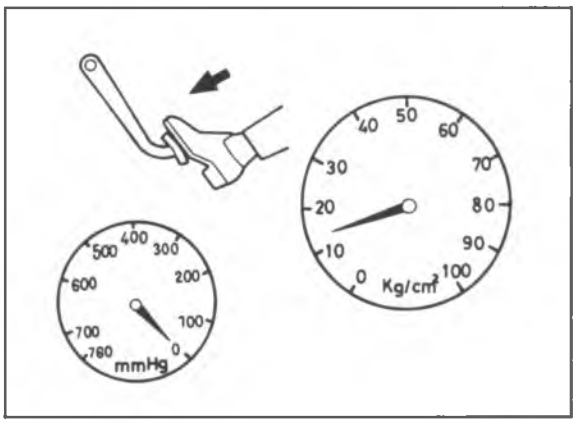

69G11X-041

Checking for Hydraulic Pressure

1. With the engine stopped and the vacuum at **0**, if the pedal force and fluid pressure are within specification, the unit is operating.

Pedal force	Fluid pressure
196 N (20 kg, 44 lb)	1,177 kPa (12 kg/cm^2, 171 psi) min.

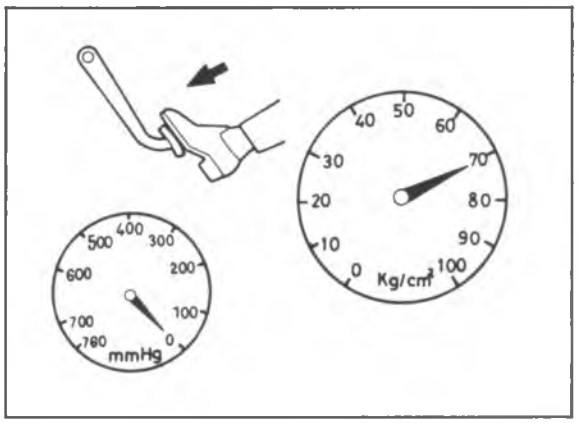

86U11X-043

2. Start the engine. Depress the brake pedal when the vacuum reaches **500 mm-Hg (19.7 in-Hg)**. If the pedal force and fluid pressure are within specification, the unit is useable.

Pedal force	Fluid pressure
196 N (20 kg, 44 lb)	7,063 kPa (72 kg/cm^2, 1,024 psi) min.

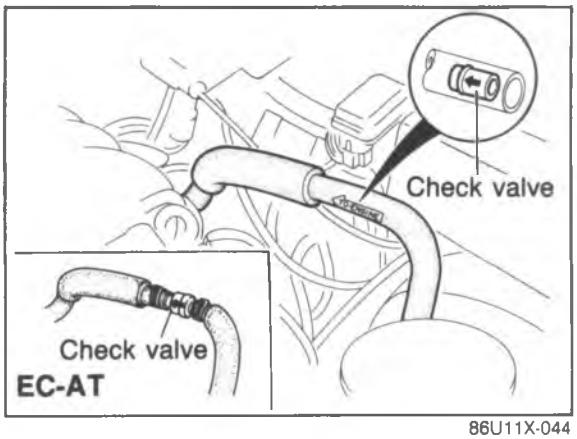

86U11X-044

INSPECTION OF CHECK VALVE

Note (Except EC-AT)
The check valve is pressed into the vacuum hose. There is an arrow on the hose surface to indicate direction of installation.

Inspection

1. Disconnect the vacuum hose from the engine.
2. Apply suction and pressure to the hose from the engine side. Check that air flows only toward the engine.
   If the air passes in both directions or not at all, replace the check valve (along with the hose).

REMOVAL

Remove in the sequence shown in the figure, referring to removal note for the specially marked parts.

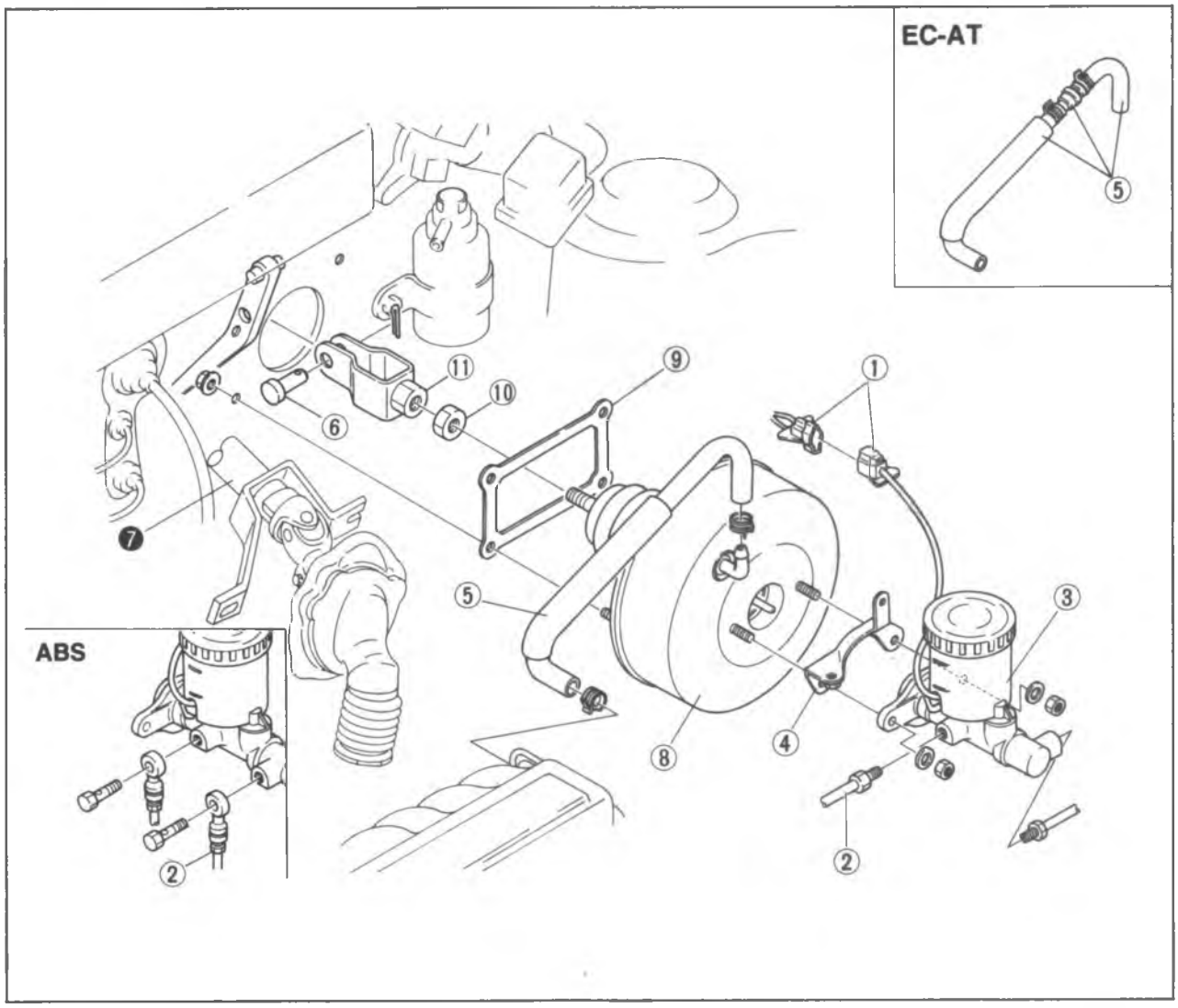

86U11X-045

1. Fluid level sensor connector
2. Brake pipe
3. Master cylinder
4. Clutch pipe holder
5. Vacuum hose and check valve
6. Clevis pin
7. Steering shaft
8. Power brake unit
9. Gasket
10. Locknut
11. Operating lever

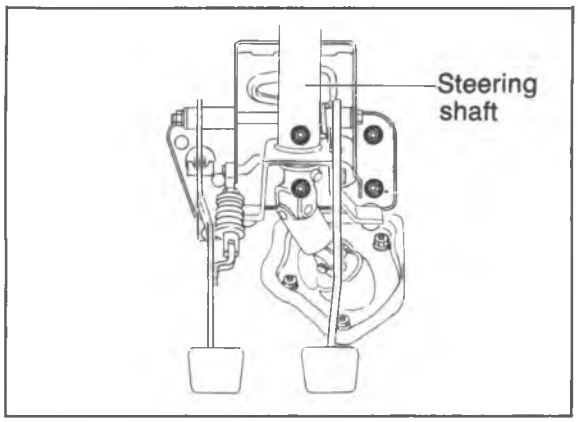

86U11X-046

Removal Note
Steering Shaft
To remove the mounting nuts, the steering shaft must be removed. (Refer to page 10—22.)

DISASSEMBLY AND ASSEMBLY

1. Disassemble in the sequence shown in the figure, referring to disassembly note for the specially marked parts.
2. Inspect each part, referring to inspection note.
3. Assemble in the reverse order of disassembly, referring to assembly note for the specially marked parts.

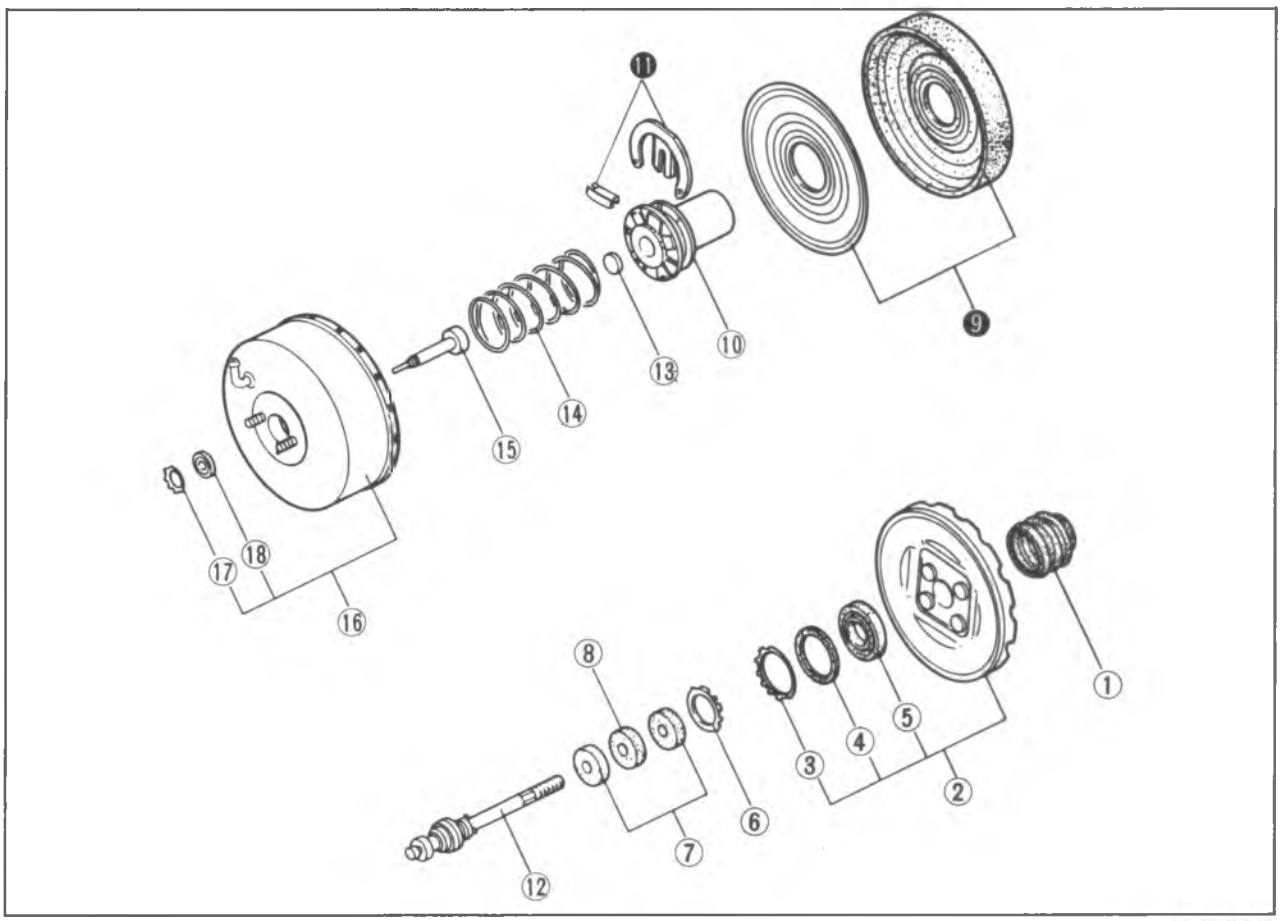

86U11X-047

1. Dust boot
2. Rear shell assembly
3. Retainer
4. Bearing
5. Dust seal
6. Retainer
7. Air filters
8. Air silencer
9. Diaphragm and plate
10. Power piston assembly
11. Retainer key
12. Valve rod and plunger assembly
13. Reaction disc
14. Spring
15. Push rod
16. Front shell assembly
17. Retainer
18. Seal

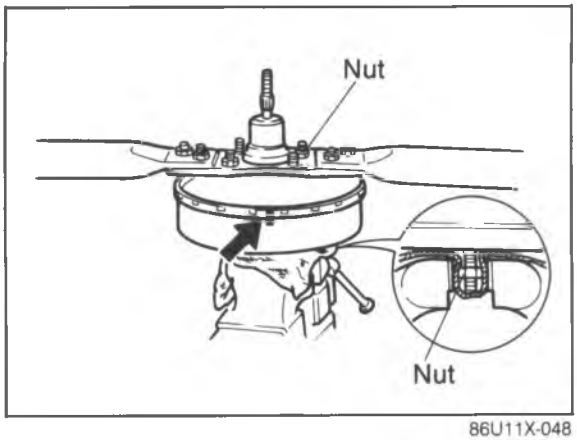

86U11X-048

Disassembly Note
Front and rear shell

1. Secure the front shell studs in a vise after attaching suitable nuts to them to prevent damage to the studs.
2. Before separating the front and rear shell assemblies, make matching marks to be used in reassembly.
3. Fit a wrench onto the rear shell studs; then fasten two of them with suitable nuts.
4. Rotate the rear shell counterclockwise to unlock.

Caution
The rear shell is spring loaded; loosen it carefully.

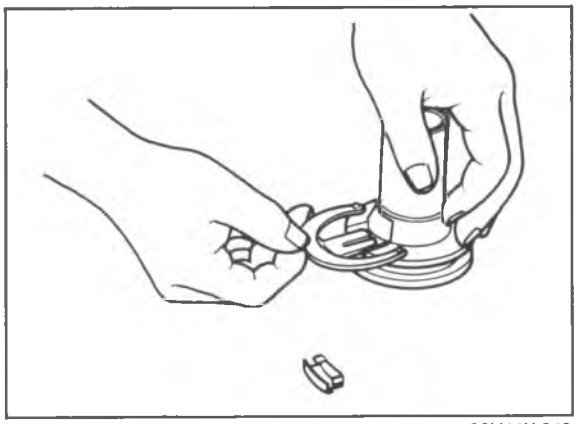
86U11X-049

Retainer key
Depress the plunger rod fully; then remove the retainer key.

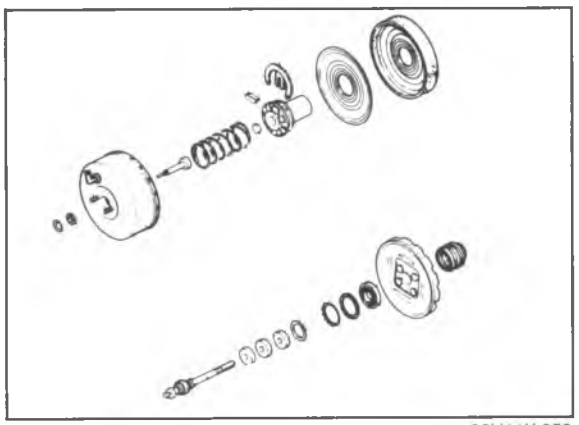
86U11X-050

Assembly Note
Application of Grease
Before assembly, coat the parts shown in the figure with silicon grease.

(1) Entire surface of reaction disc
(2) Dust seal lip
(3) Push rod
(4) Diaphragm to shell contacting surfaces
(5) Power piston
(6) Valve plunger oil seal

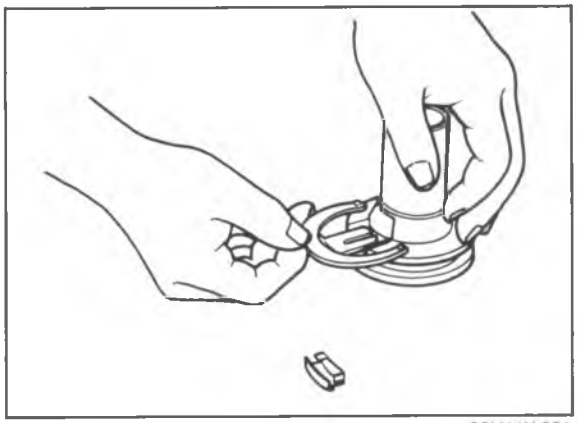
86U11X-051

Retainer key

1. Push down the plunger rod.
2. Align the groove of the valve plunger with the slot of the power piston.
3. Insert the retainer key.

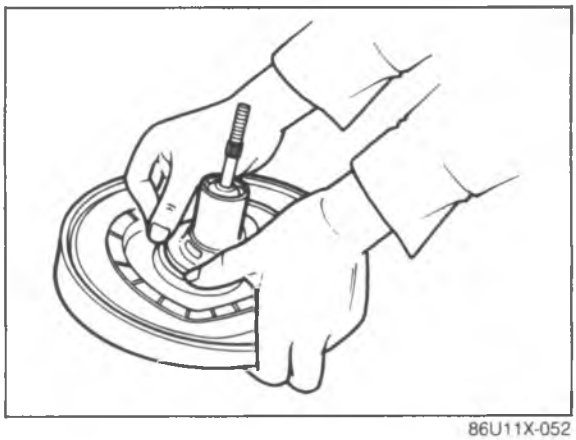

86U11X-052

Diaphragm
Install the diaphragm to the power piston and plate.

Caution
Check that the diaphragm is well seated in the groove.

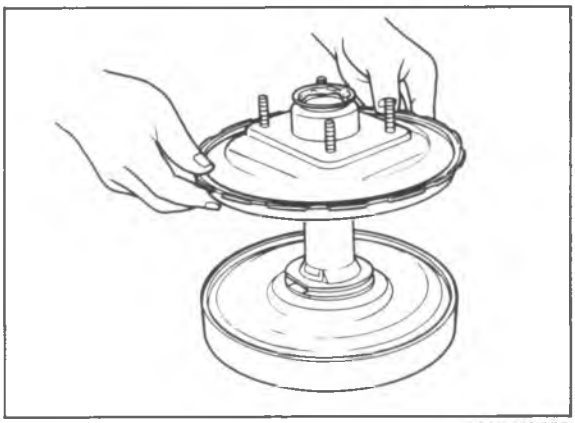

86U11X-053

Rear shell assembly
Assemble the rear shell assembly; carefully guiding the tube end of the power piston through the dust seal of the rear shell.

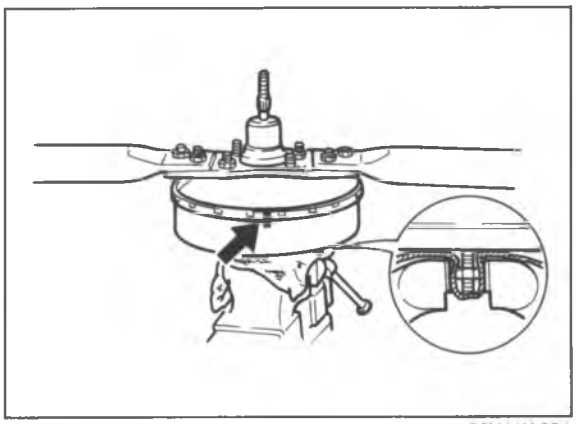

86U11X-054

Front shell and rear shell
Press down the rear shell assembly, and rotate it clockwise until the matching marks are aligned.

Caution
Fit suitable nuts to two studs of the rear shell and tighten them to mount the wrench.

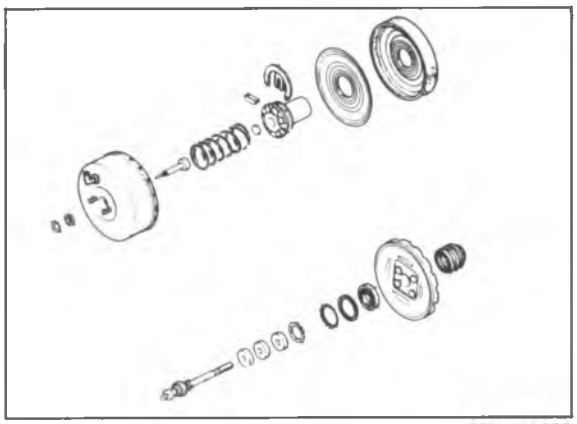

86U11X-055

INSPECTION
1. Inspect all rubber parts. Wipe free of fluid and carefully inspect all rubber parts for cuts, nicks, and other damage.
2. Check the power piston for cracks,distortion, chipping, and damaged seats.
3. Inspect the reaction disc rubber for deterioration.
4. Check that the seats of the valve rod and plunger are smooth and free of nicks and dents.
5. Inspect the front and rear shells for scratches, scores, pits, dents, and other damage.
6. Check the diaphragm for cuts and other damage.

INSTALLATION

1. Install in the reverse order of removal, referring to installation note for the specially marked parts.
2. Tighten all nuts and bolts to the specified torque, referring to torque specifications.
3. After installation:
   (1) Add fluid and bleed the air. (Refer to page 11—8)
   (2) Check all parts for fluid leakage.
   (3) Make an on-vehicle check of the unit (Refer to page 11—19).
   (4) Verify that the vacuum hose does not contact other parts.

Torque specifications

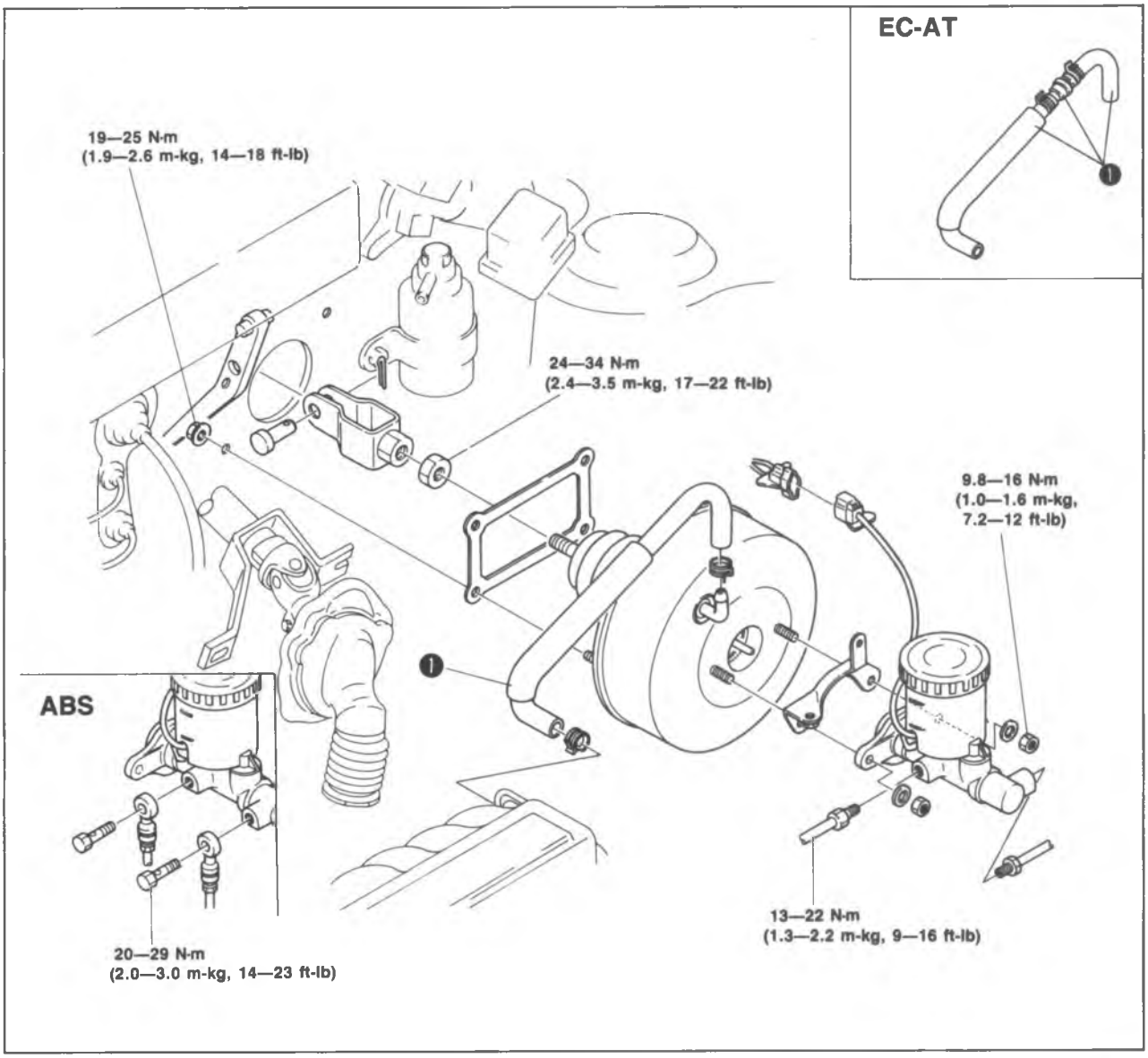

86U11X-056

1. Vacuum hose and check valve.

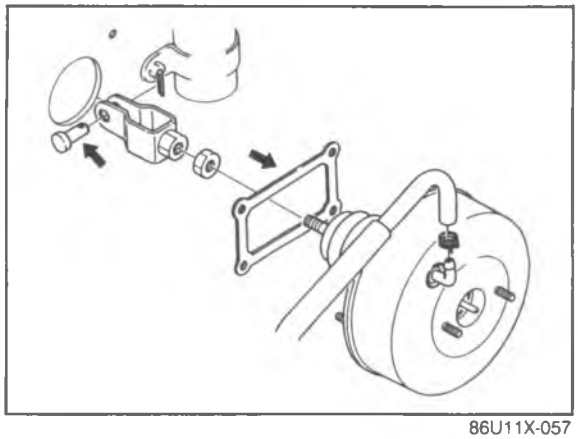

86U11X-057

Installation Note
Application of grease and sealant
1. Apply grease to the clevis pin contact surface.
2. Apply sealant to the gasket contact surface.

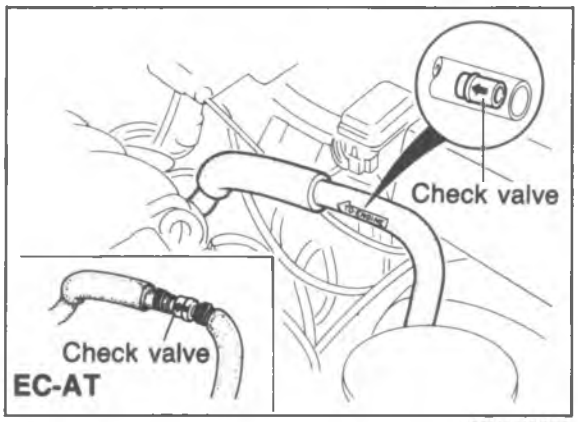

86U11X-058

Vacuum hose and check valve
Install the vacuum hose and check valve noting the installation direction.

Note (Except EC-AT)
The check valve is pressed into the vacuum hose.

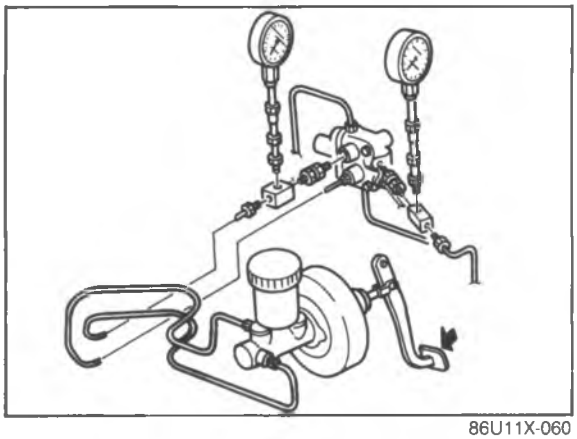

86U11X-060

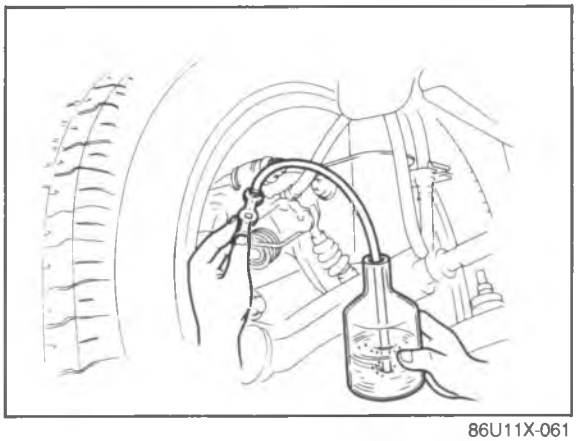

86U11X-061

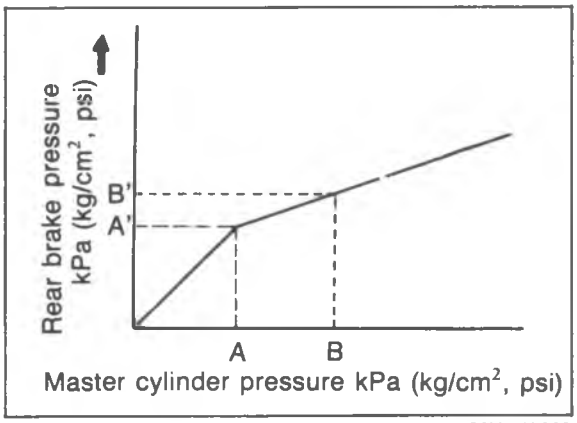

86U11X-062

DUAL PROPORTIONING VALVE

FUNCTION CHECK

1. Connect two pressure gauges [9,810 kPa (100 kg/cm^2, 1,422 psi)] to the brake pipes and adaptors as shown in the figure.

   Adaptor and flare nut tightening torque: 13—22 N·m (1.3—2.2 m-kg, 9—16 ft-lb)

   Note
   Disconnect and connect the brake pipes with the SST (49 0259 770B).

2. Bleed air from the brake system. (Refer to page 11—8.)

3. Depress the brake pedal until the master cylinder pressure equals A; then measure rear brake pressure A'.
4. Depress the brake pedal again, apply additional pressure until A equals B; then measure pressure B'.

   Specification

Fluid pressure		kPa (kg/cm^2, psi)	
A	A'	B	B'
2,943 (30,427)	2,943 ± 196 (30 ± 2, 427 ± 28)	6,867 (70,995)	4,120 ± 196 (42 ± 2, 597 ± 28)

5. If the measurements are not within specification, replace the valve assembly.
6. Install the brake pipes to the valve, and bleed air from the brake system.

REMOVAL AND INSTALLATION

1. Remove in the sequence shown in the figure, referring to removal and installation note for the specially marked parts.
2. Install in the reverse order of removal.
3. After installation:
   (1) Add brake fluid and bleed the air (Refer to page 11—8.)
   (2) Check the brake lines for fluid leakage.

Caution
Brake fluid will damage painted surfaces. If it does get on a painted surface, wipe it off immediately.

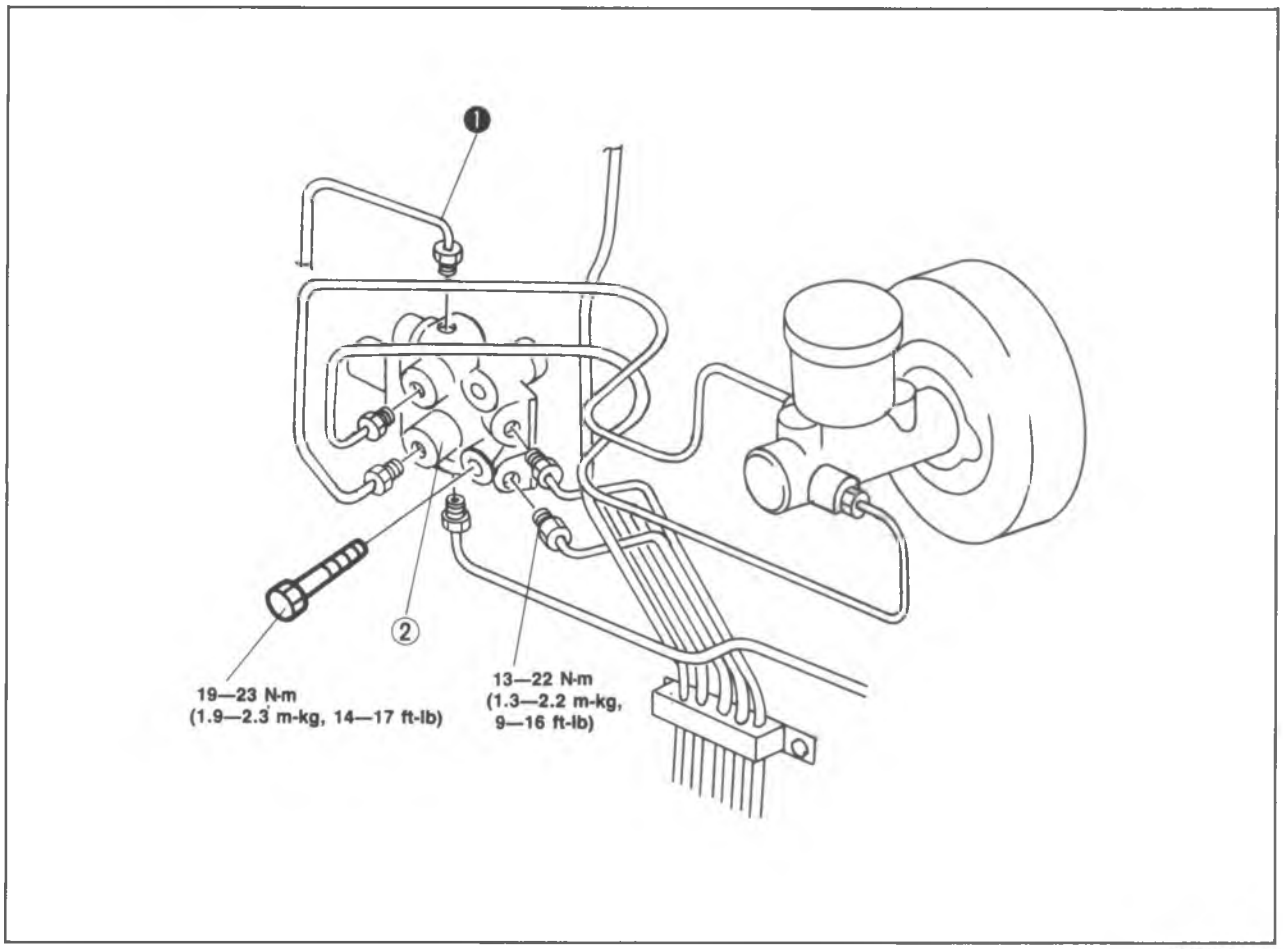

86U11X-063

1. Brake pipe
2. Dual proportioning valve

86U11X-064

Removal and Installation Note
Disconnect and connect the brake pipes with the **SST**.

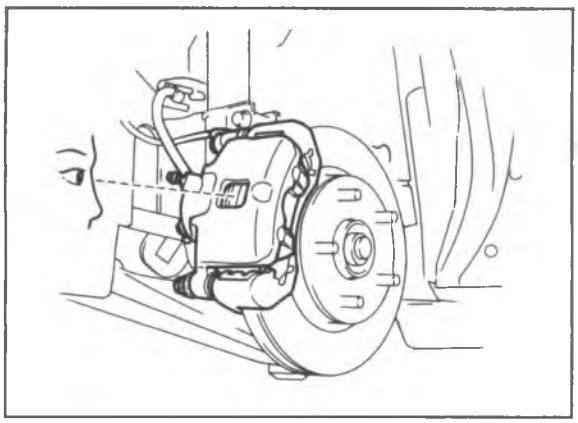

86U11X-065

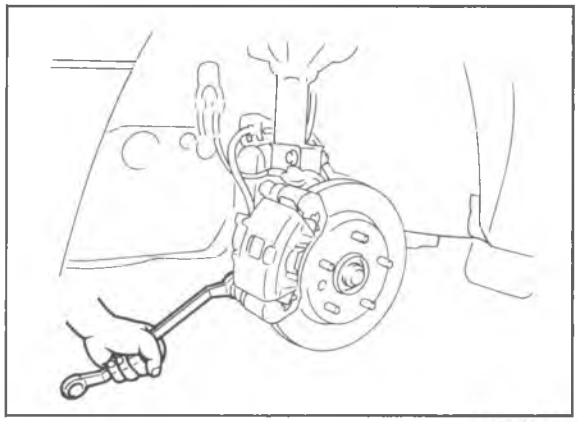

86U11X-066

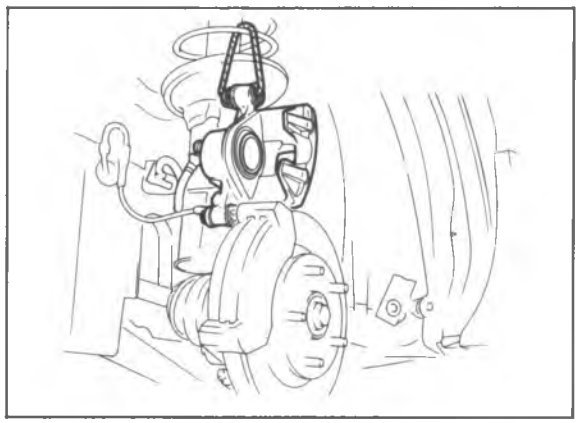

86U11X-067

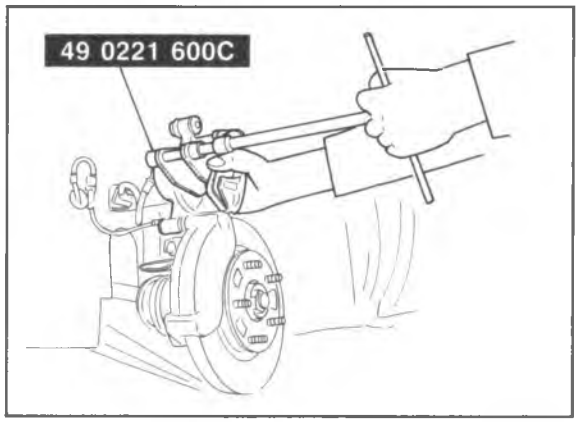

86U11X-068

FRONT DISC BRAKE

SIMPLE INSPECTION OF DISC PAD WEAR

1. Loosen the front wheel lug nuts.
2. Jack up the front of the vehicle and support it with safety stands.
3. Remove the wheels.
4. Look through the caliper inspection hole and check that the remaining thickness of the pad is **2 mm (0.08 in) min**.

Note
When the remaining thickness becomes 2 mm (0.08 in), the wear indicator indicates that the pad should be replaced by creating a squealing noise while driving.

REPLACEMENT OF DISC PAD

Caution
Replace the left and right pads at the same time.

1. Loosen the front wheel lug nuts.
2. Block the rear wheels firmly.
3. Jack up the front of the vehicle and support it with safety stands.
4. Remove the wheels.
5. Remove the lower mounting bolt.
6. Pivot the caliper on the top bolt and support it.
7. Remove the pads and shims.

Warning
Asbestos dust is a health hazard. Do not blow away brake dust with compressed air.

8. Apply the grease supplied in the pad attachment set to the new shims and attach them to the new pads.
9. Push the piston inward with the **SST** and the old pad.
10. Install the new pads and shims into the mounting support.

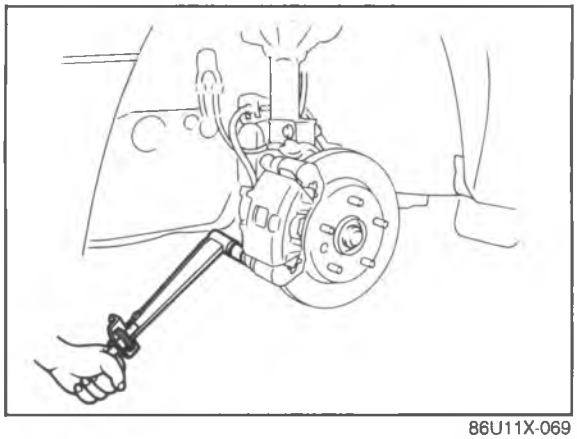

86U11X-069

11. Lower the caliper assembly onto the mounting support.
12. Tighten the mounting bolt to the specified torque.

Tightening torque:
31—41 N·m (3.2—4.2 m-kg,, 23—30 ft-lb)

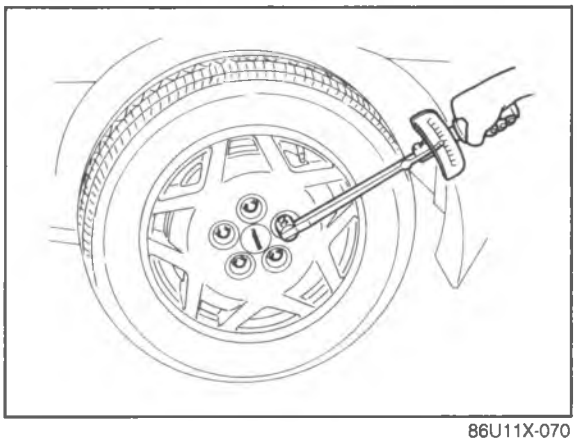

86U11X-070

13. Mount the wheels.
14. Apply the brakes a few times; then turn the wheels and check that the brakes do not drag excessively.
15. Lower the vehicle.
16. Tighten the wheel lug nuts.

Tightening torque:
88—118 N·m (9.0—12.0 m-kg, 65—87 ft-lb)

REMOVAL

1. Loosen the wheel lug nuts.
2. Jack up the front of the vehicle and support it with safety stands.
3. Remove the wheels.
4. Remove in the sequence shown in the figure.

Warning
Asbestos dust is a health hazard. Do not blow away brake dust with compressed air.

Caution
Brake fluid will damage painted surfaces. If it does get on a painted surface, wipe it off immediately.

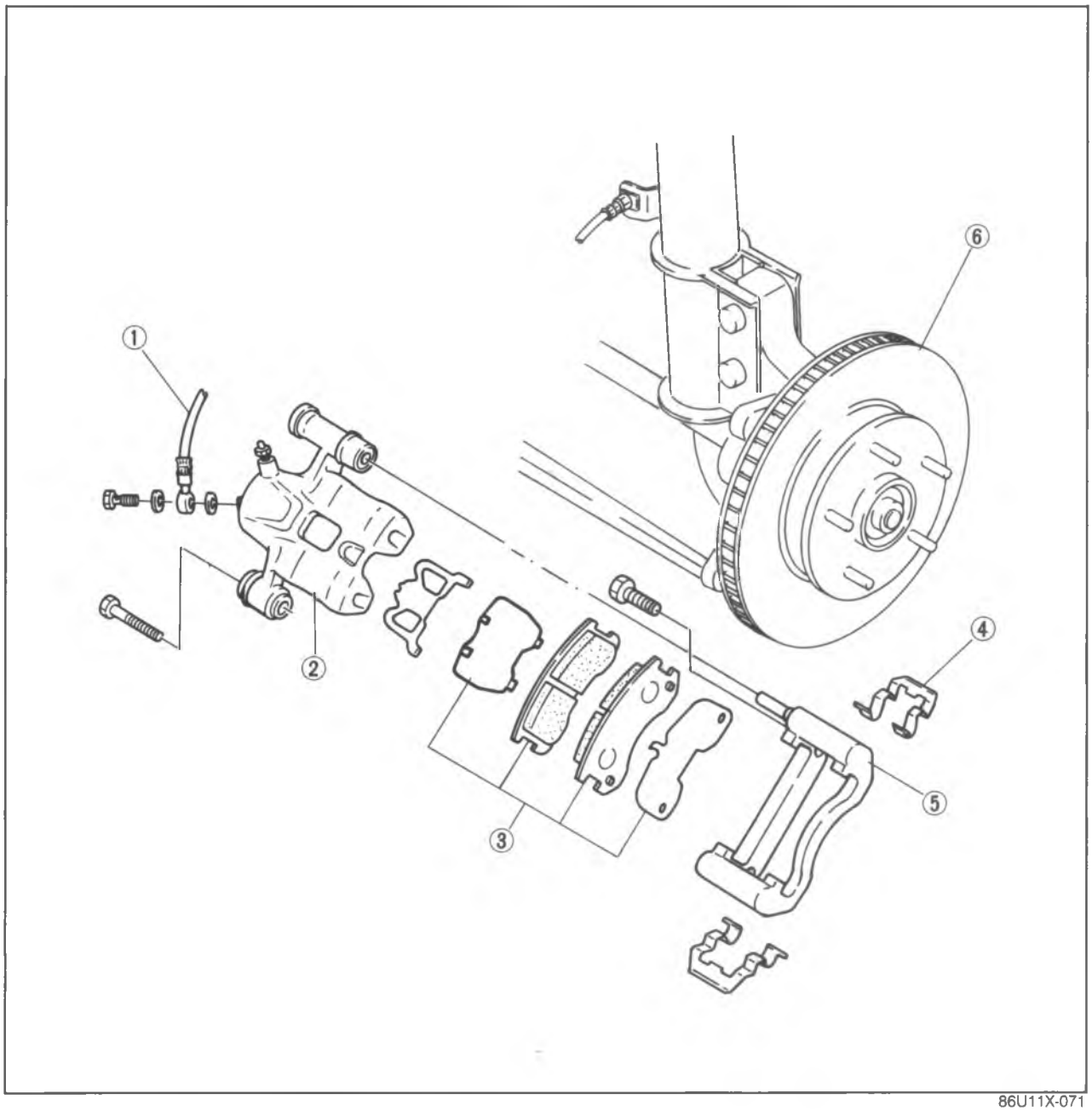

86U11X-071

1. Flexible hose
2. Caliper assembly
3. Pad and shim
4. Guide plate
5. Mounting support
6. Disc plate (Refer to section 9)

DISASSEMBLY AND ASSEMBLY

1. Disassemble in the sequence shown in the figure, referring to disassembly note for the specially marked parts.
2. Inspect all parts, referring to inspection note.
3. Assemble in the reverse order of disassembly, referring to assembly note for the specially marked parts.

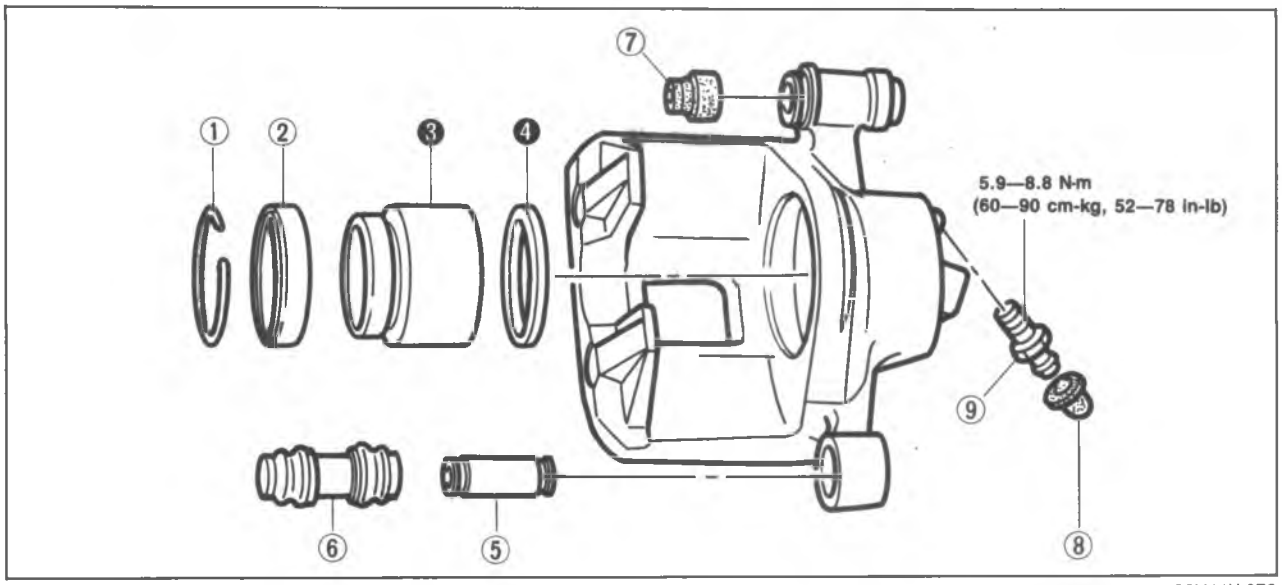

86U11X-072

1. Snap ring
2. Dust seal
3. Piston
4. Piston seal
5. Guide pin
6. Pin boot
7. Bushing
8. Cap
9. Bleeder screw

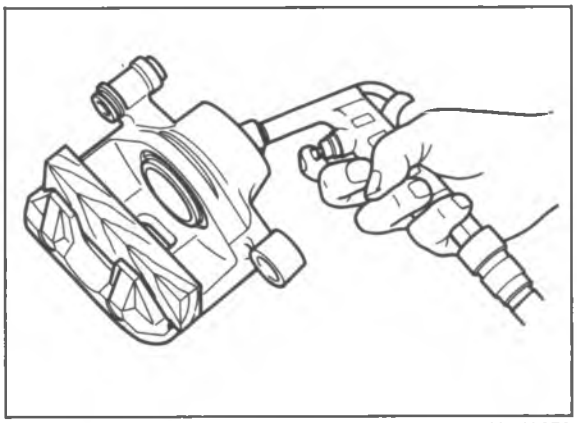

86U11X-073

Disassembly Note

Piston

Place a piece of wood in the caliper; then blow compressed air through the hose connection hole to force out the piston.

Caution

Blow the compressed air a little at a time to prevent the piston from jumping out.

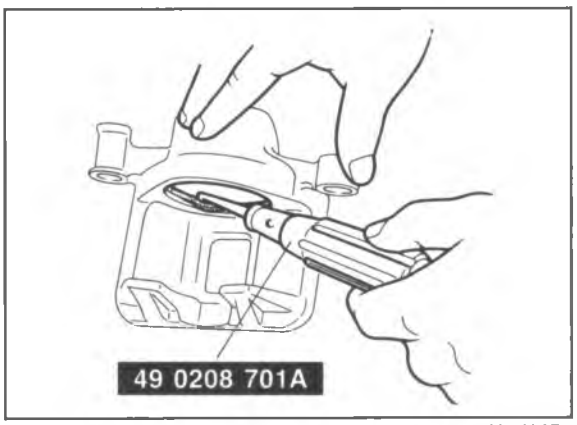

86U11X-074

Piston seal

Remove the piston seal from the caliper with the **SST**.

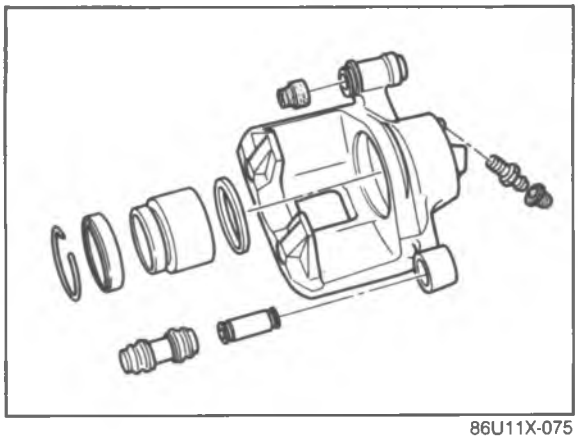

86U11X-075

Inspection Note
Check the following and replace any faulty parts.
1. Cylinder and piston for wear or rust
2. Caliper body for damage or cracks
3. Boot for damage or poor sealing

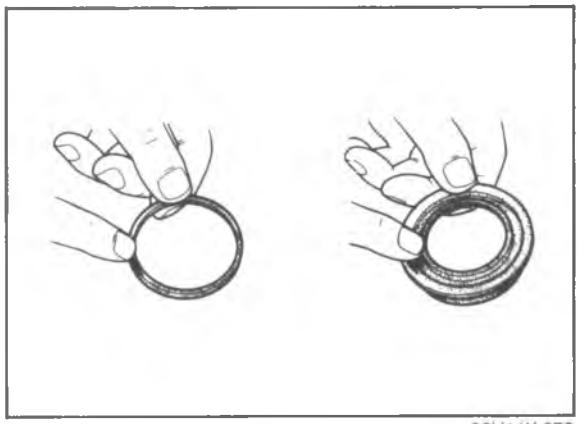

86U11X-076

Assembly Note
Application of grease
Coat the following parts with the grease supplied in the seal kit.
1. Piston seal
2. Dust seal

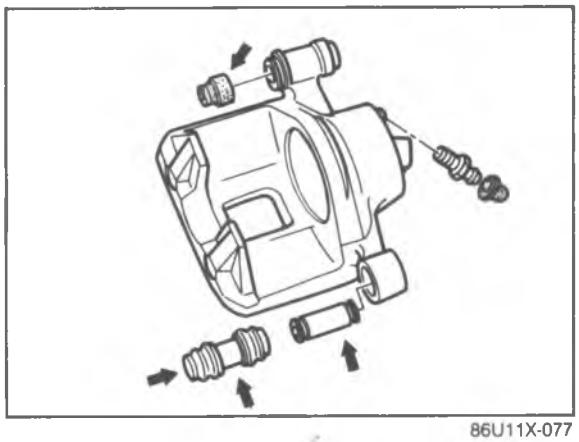

86U11X-077

3. Guide pin
4. Guide pin boot
5. Bushing

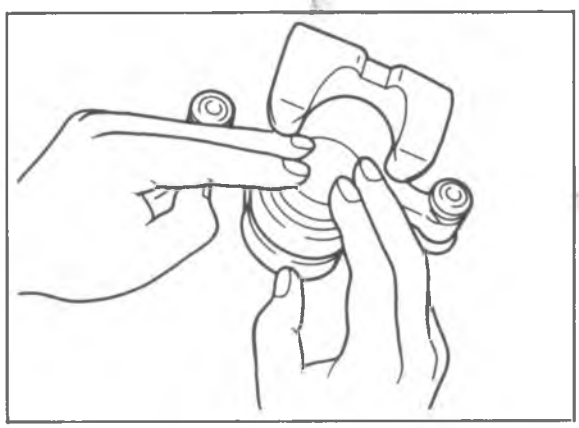

86U11X-078

Piston
Coat the piston and the cylinder with brake fluid; then insert the piston straight into the cylinder.

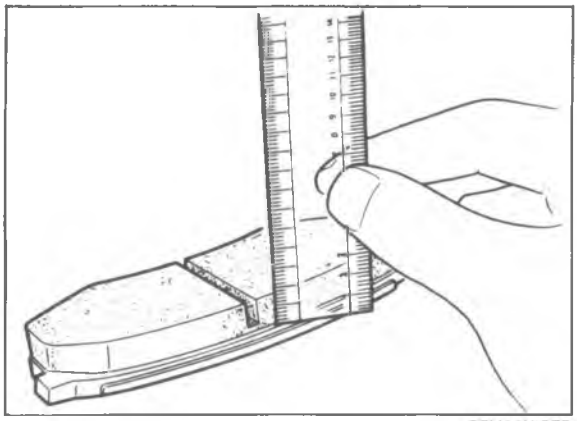

86U11X-079

INSPECTION

Check the following and replace any faulty parts.

Disc Pad

1. Oil or grease on facing
2. Abnormal wear or cracks
3. Deterioration or heat damage
4. Remaining lining thickness

Thickness: 2.0 mm (0.08 in) min.

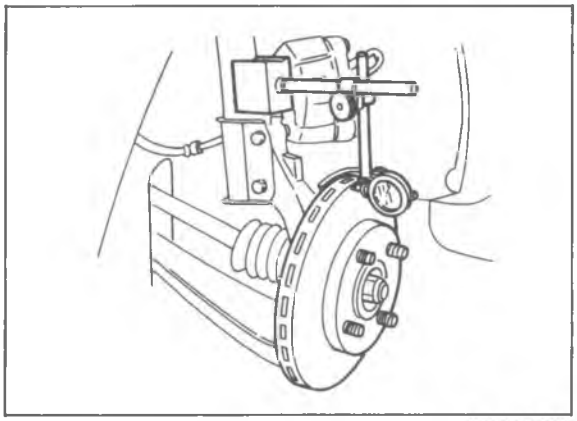

86U11X-080

Disc Plate

1. Runout

Runout: 0.1 mm (0.004 in) max.

Caution

a) There must be no wheel bearing looseness.

b) Measure at the outer edge of the disc plate surface.

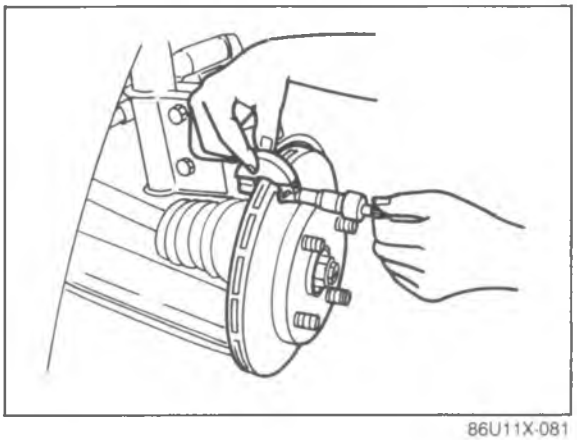

86U11X-081

2. Wear or damage

Thickness

Standard: 24 mm (0.94 in)

Minimum: 22 mm (0.86 in)

INSTALLATION

1. Install in the reverse order of removal.
2. Tighten all nuts and bolts to the specified torque, referring to torque specifications.
3. After installation:
   (1) Add brake fluid and bleed air. (Refer to page 11—8.)
   (2) Depress the brake pedal a few times and check that the front brakes do not drag excessively while rotating the wheels.

Note
Refer to page 11—29 for pad installation.

Torque specifications

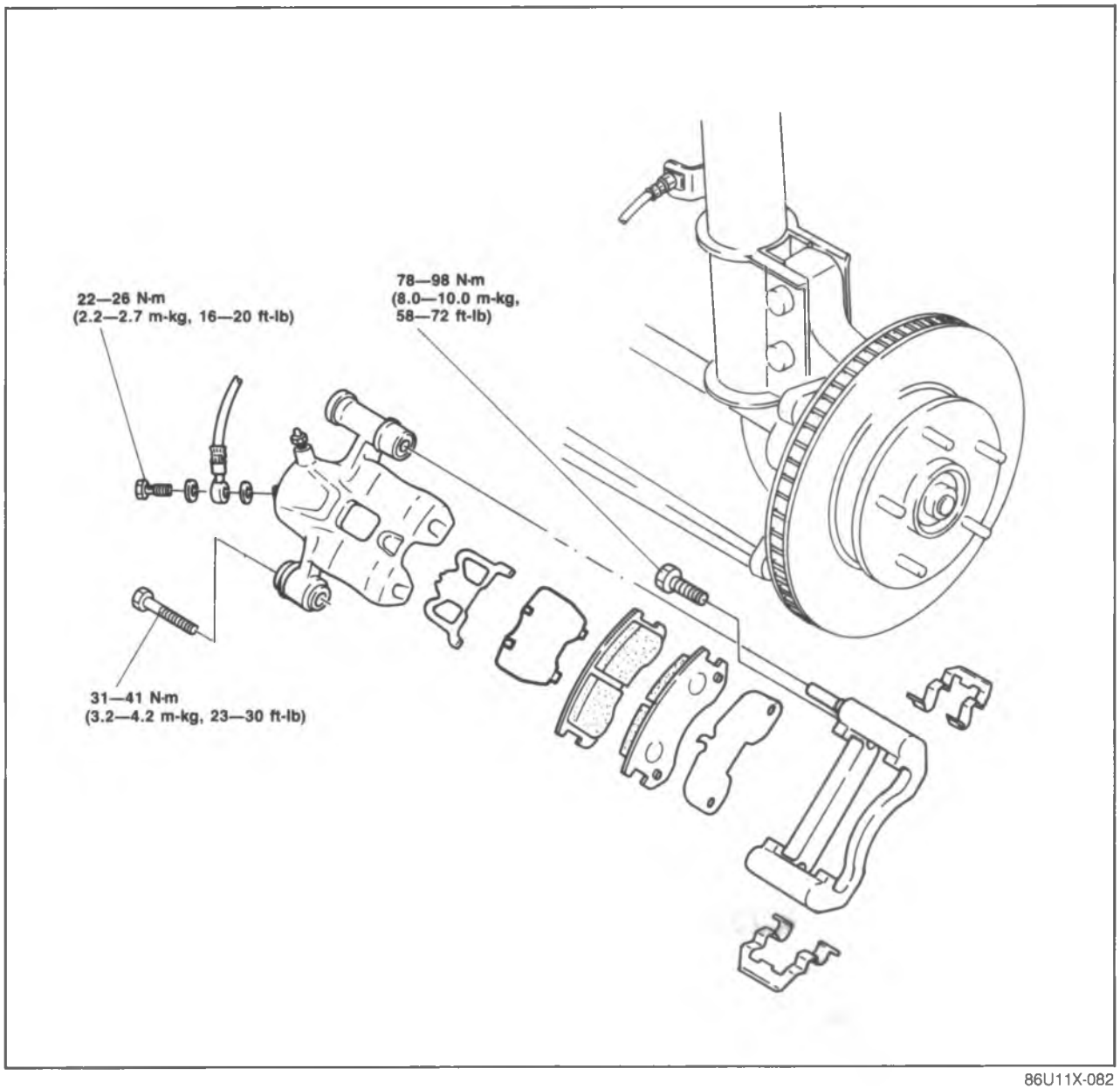

86U11X-082

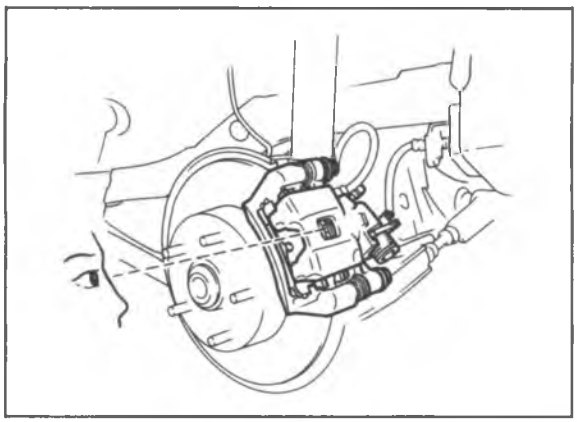

86U11X-083

REAR DISC BRAKE

SIMPLE INSPECTION OF DISC PAD WEAR

1. Loosen the rear wheel lug nuts.
2. Jack up the rear of the vehicle and support it with safety stands.
3. Remove the wheels.
4. Lock through the caliper inspection hole and check that the remaining thickness of the pad is **1 mm (0.04 in) min**.

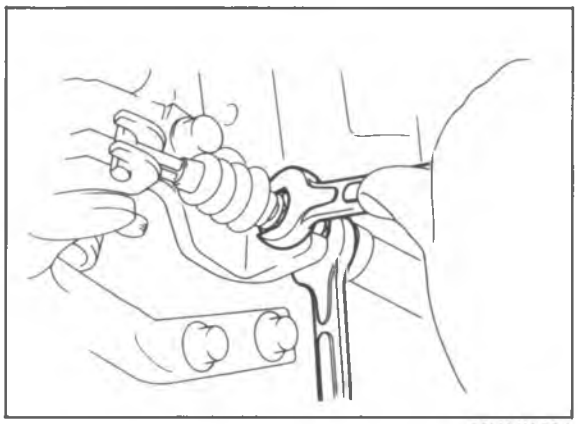

86U11X-084

REPLACEMENT OF DISC PAD

Caution
Replace the left and right pads at the same time.

1. Loosen the wheel lug nuts.
2. Release the parking brakes.
3. Jack up the rear of the vehicle and support it with safety stands.
4. Remove the wheels.
5. Remove the parking brake cable from the cable bracket and the operating lever.

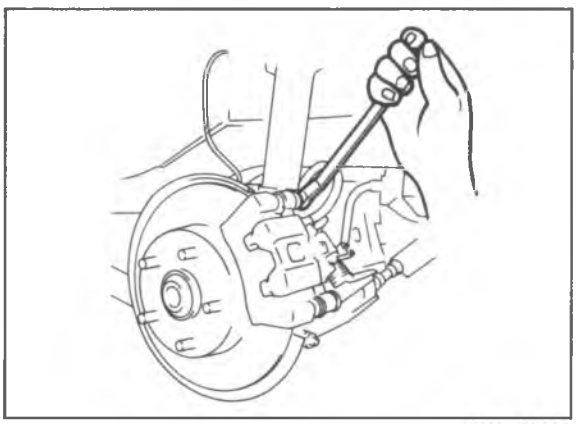

86U11X-085

6. Remove the upper mounting bolt, then pivot the caliper.
7. Remove the V-springs.
8. Remove the pads and shims.

Warning
Asbestos dust is a health hazard. Do not blow away brake dust with compressed air.

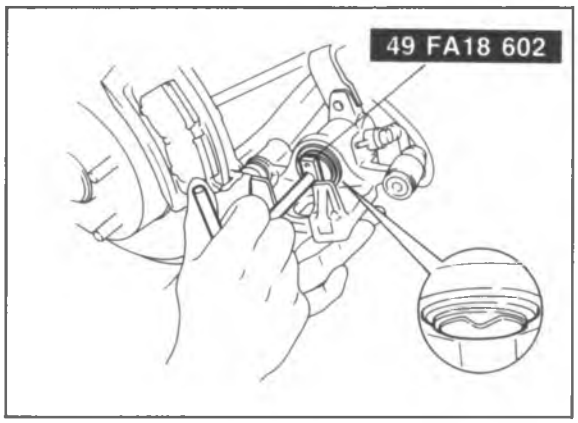

86U11X-086

9. Apply the grease supplied in the pad attachment set to the new shims; then attach them to the new pads.
10. Turn the piston fully inward by rotating the **SST** clockwise. Align the piston groove as shown in the illustration.

Note
The piston groove and inner pad alignment pin must be aligned when the inner pad is installed.

11. Install the pads and shims to the mounting support.
12. Install the pad clip.

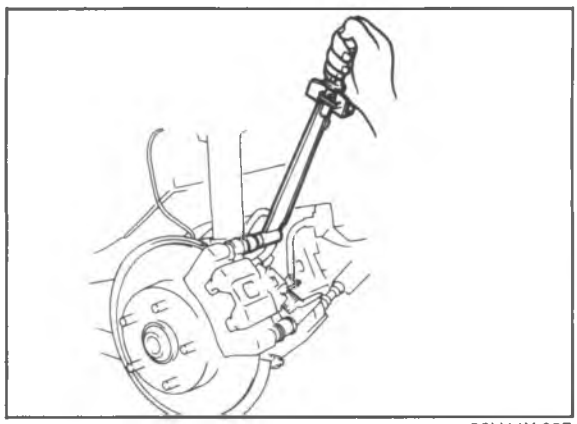

86U11X-087

13. Lift the caliper assembly onto the mounting support.
14. Tighten the mounting bolt to the specified torque.

Tightening torque:
16—24 N·m (1.6—2.4 m-kg, 12—17 ft-lb)

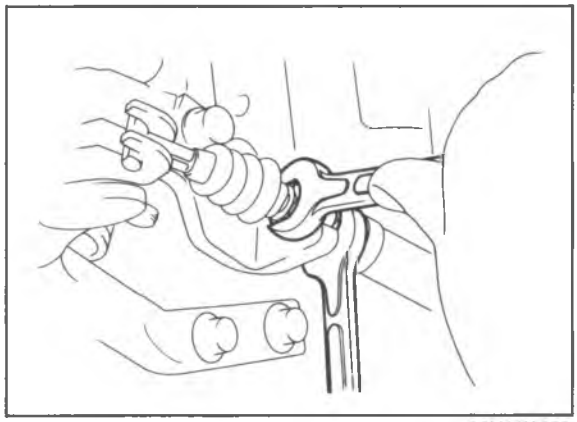

86U11X-088

15. Connect the parking cable end to the operating lever; then tighten the locknut.

Tightening torque:
20—28 N·m (2.0—2.9 m-kg, 14—21 ft-lb)

Caution
There must be no clearance between the cable end and the operating lever.

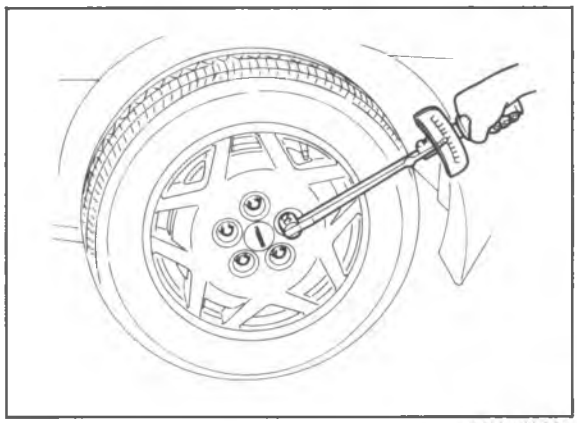

86U11X-089

16. Mount the wheels.
17. Apply the brakes a few times; then check that the brakes do not drag excessively while turning the wheels.
18. Lower the vehicles.
19. Tighten the wheel lug nuts.

Tightening torque:
88—118 N·m (9—12 m-kg, 65—87 ft-lb)

REMOVAL

1. Loosen the wheel lug nuts.
2. Release the parking brakes.
3. Jack up the rear of the vehicle and support it with safety stands.
4. Remove the wheels.
5. Remove in the sequence shown in the figure.

Warning
Asbestos dust is a health hazard. Do not blow away brake dust with compressed air.

Caution
Brake fluid will damage painted surfaces. If it does get or a painted surface, wipe it off immediately.

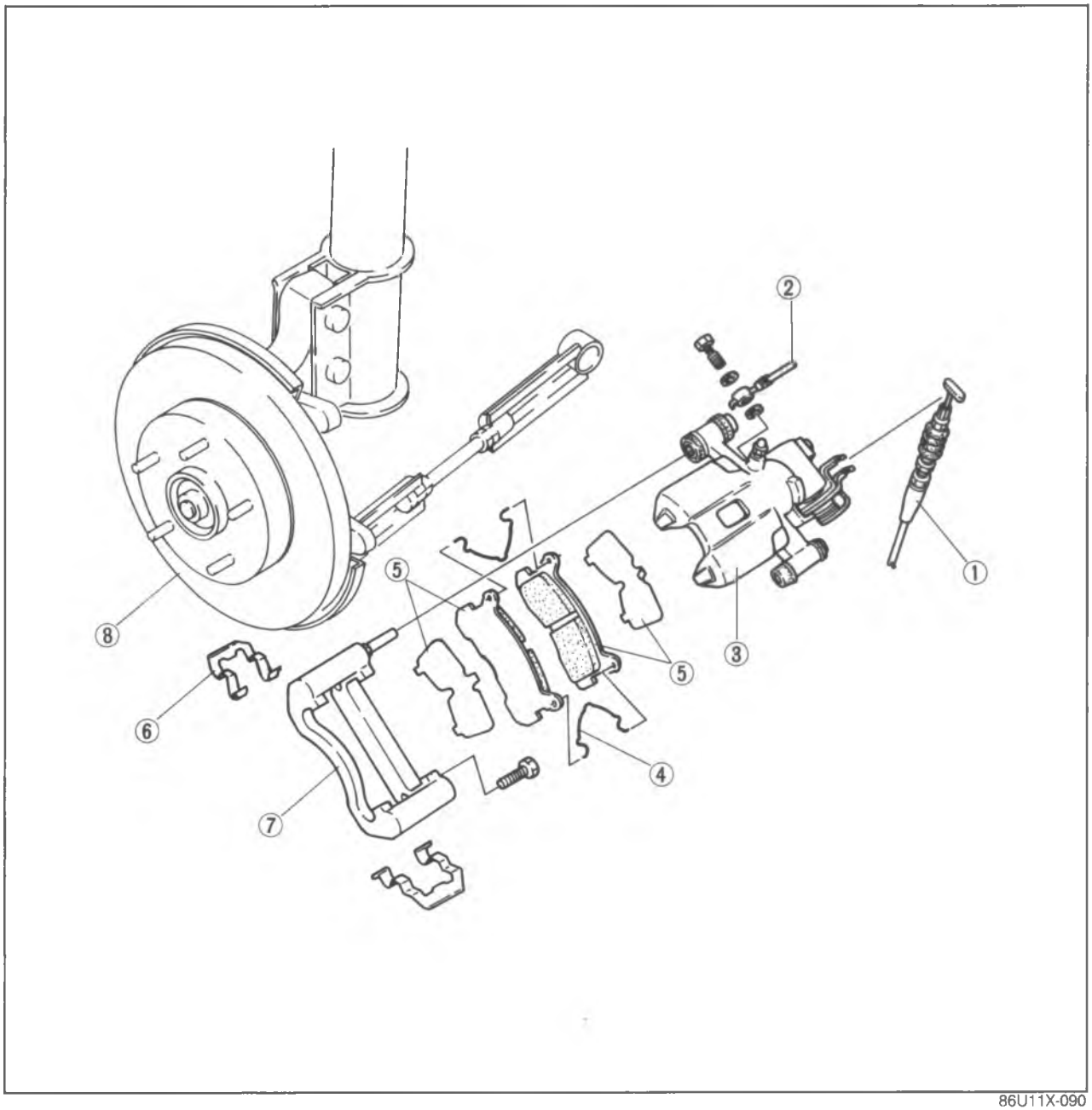

86U11X-090

1. Parking brake cable
2. Flexible hose
3. Caliper assembly
4. V-spring
5. Pad and shim
6. Guide plate
7. Mounting support
8. Disc plate (Refer to section 9)

DISASSEMBLY AND ASSEMBLY

1. Disassemble the caliper in the sequence shown in the figure, referring to disassembly note for the specially marked parts.
2. Inspect all parts, referring to inspection note.
3. Assemble in the reverse order of disassembly, referring to assembly note for the specially marked parts.

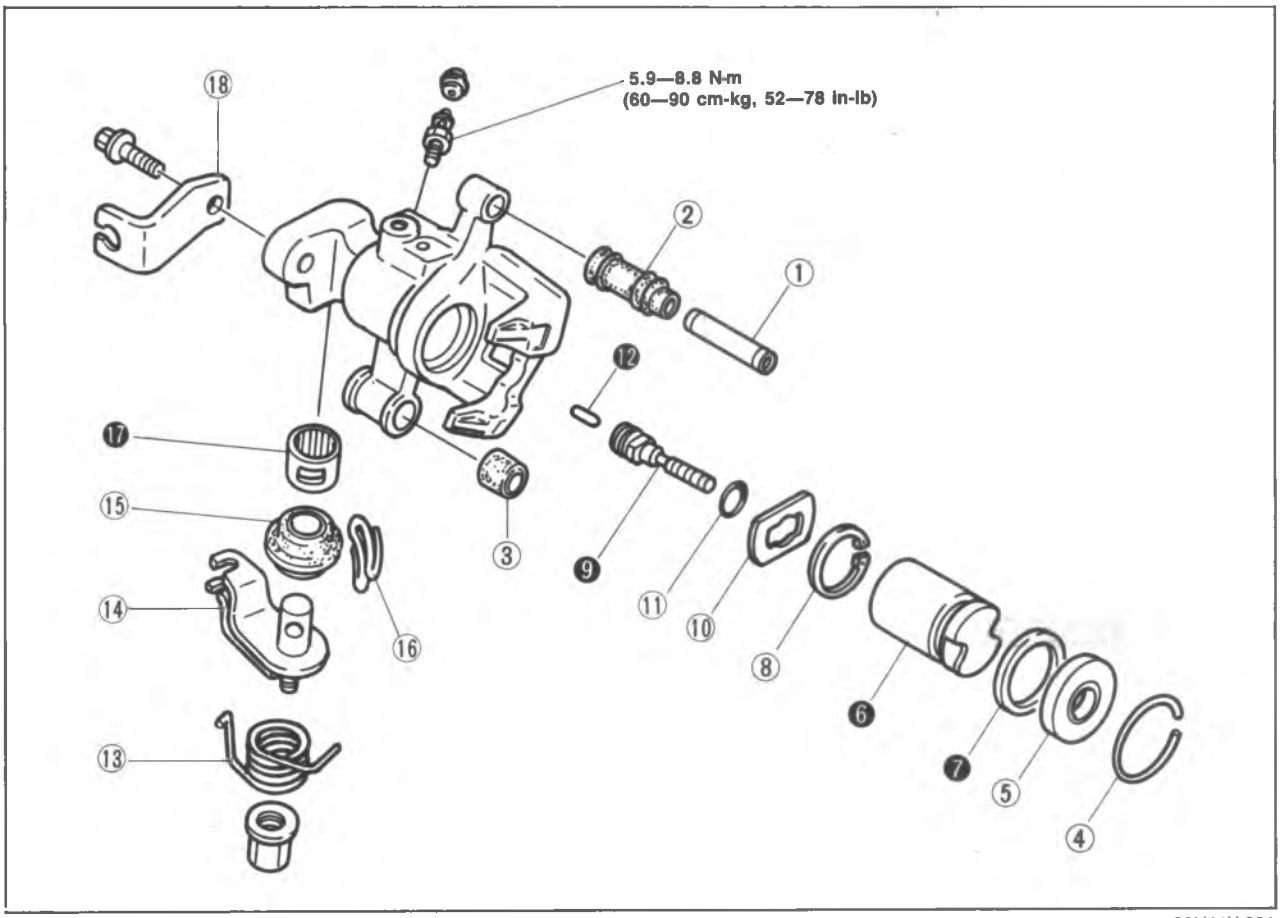

86U11X-091

1. Guide pin
2. Pin boot
3. Bushing
4. Retaining ring
5. Dust seal
6. Piston
7. Piston seal
8. Snap ring
9. Adjuster spindle
10. Stopper
11. "O" ring
12. Connecting link
13. Return spring
14. Operating lever
15. Boot
16. Boot clip
17. Needle bearing
18. Cable braket

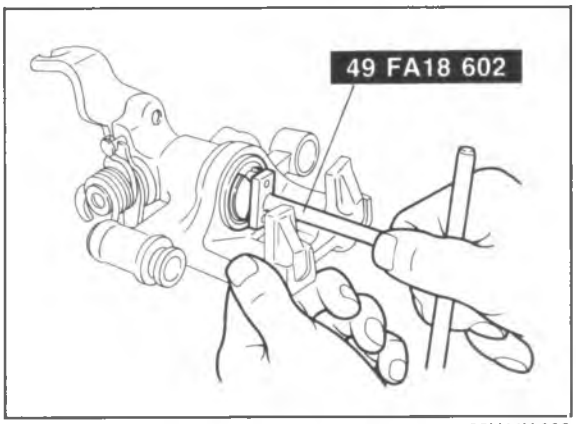

86U11X-092

Disassembly Note
Piston
Remove the piston with the **SST**.

Note
The piston can be removed by turning the SST counterclockwise.

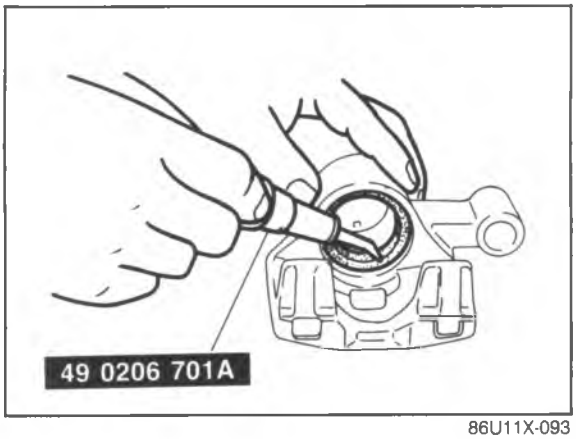

86U11X-093

Piston seal
Remove the piston seal with the **SST**.

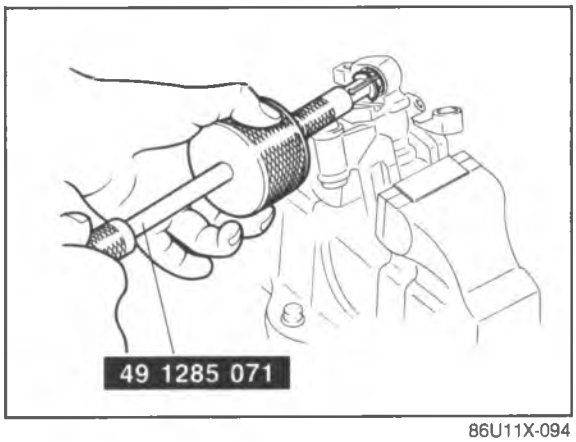

86U11X-094

Needle bearing
1. Secure the caliper in a vise.

   Caution
   Insert a soft, protective material (such as copper plates) in the jaws of the vise.

2. Remove the needle bearing from the caliper with the **SST**.

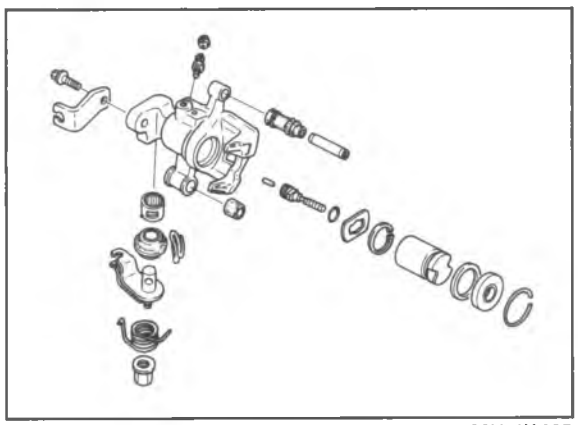

86U11X-095

Inspection Note
Check the following and repair or replace any faulty parts.
1. Cylinder and piston for wear and rust
2. Caliper body for damage and cracks
3. Sleeve bolt and sleeve for damage and wear
4. Guide pin for damage and rust
5. Adjuster spindle threads for damage

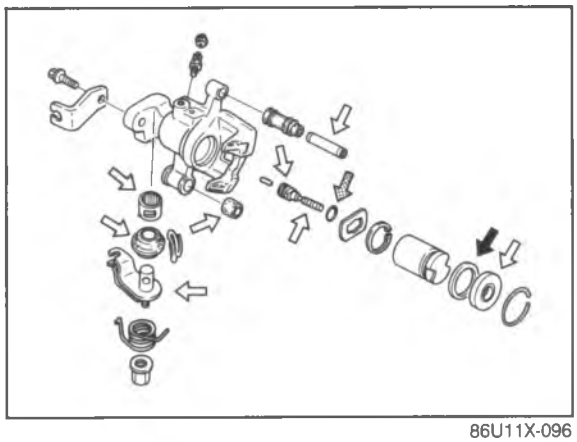

86U11X-096

Assembly Note
Application of grease
Before assembly, apply the grease supplied in the seal kit to the parts indicated by the arrows.

⇨ : Orange grease
⇨ : White grease
➡ : Red grease

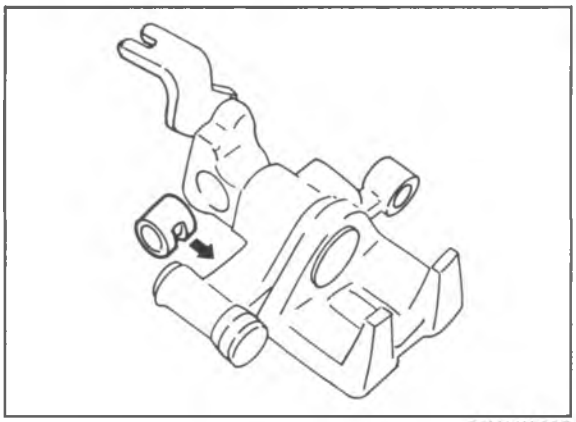

86U11X-097

Needle bearing

1. Align the needle bearing hole with the caliper hole, and set the needle bearing in the caliper.

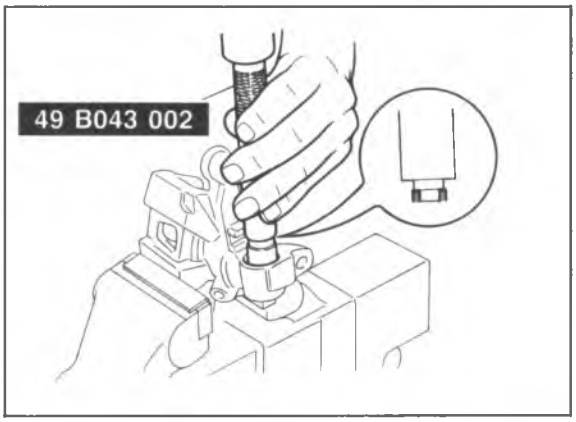

86U11X-098

2. Press the needle bearing into the caliper with the **SST** until the **SST** bottoms against the caliper.

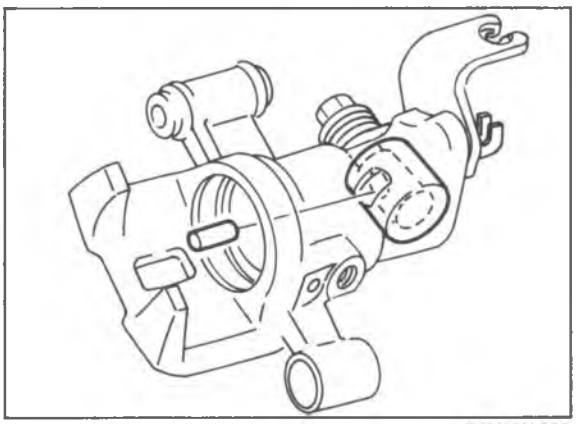

86U11X-099

Connecting link

Install the connecting link into the operating lever.

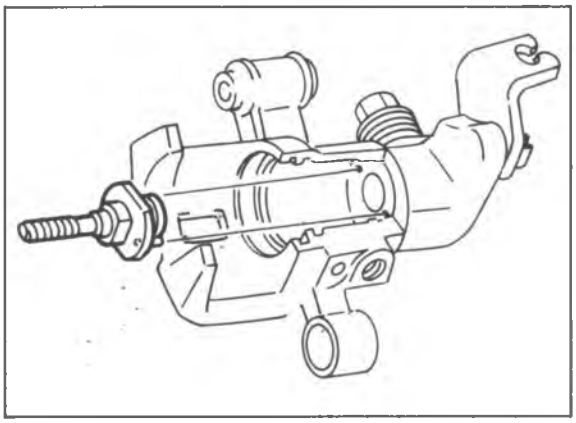

86U11X-100

Adjuster spindle

1. Assemble the adjuster spindle and the stopper.
2. Install the adjuster and stopper straight into the caliper cylinder with the two stopper pins fit into the caliper.
3. Install the snap ring.

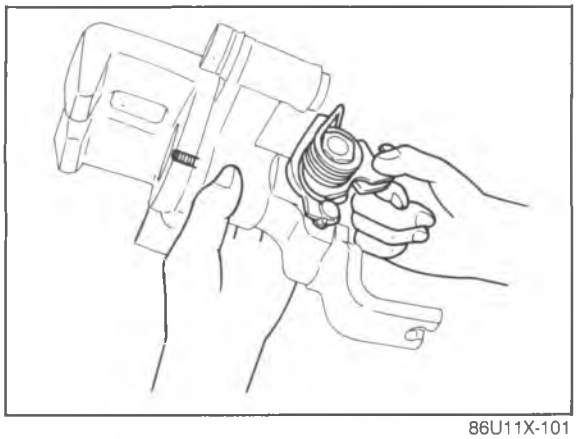

86U11X-101

4. Move the operating lever and check that the adjuster spindle moves smoothly.

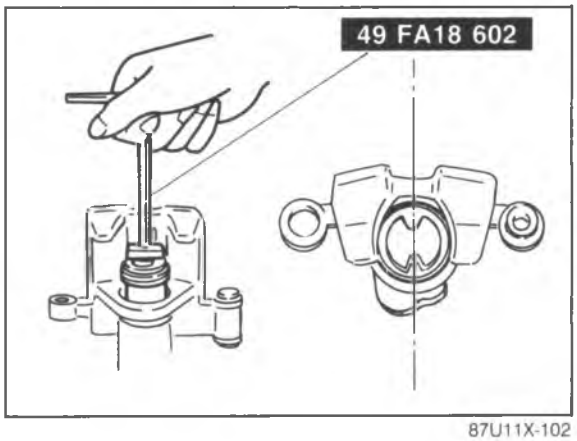

87U11X-102

Piston

1. Clean the piston.
2. Install the dust seal in the piston groove.
3. Turn the piston into the caliper cylinder while rotating the **SST** clockwise.

   Note
   Turn the piston in fully, and align the piston grooves as shown in the illustration.

4. Fit the dust seal into the caliper cylinder.

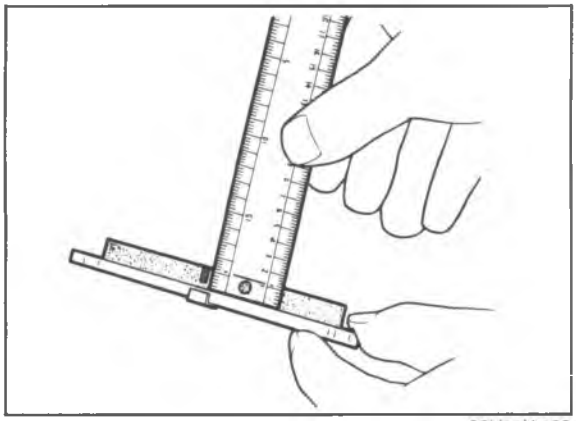

86U11X-103

INSPECTION

Check the following and replace or repair any faulty parts.

Disc Pad

1. Oil or grease on facing
2. Abnormal wear or cracks
3. Deterioration or heat damage
4. Remaining liming thickness

Thickness: 1 mm (0.04 in) min.

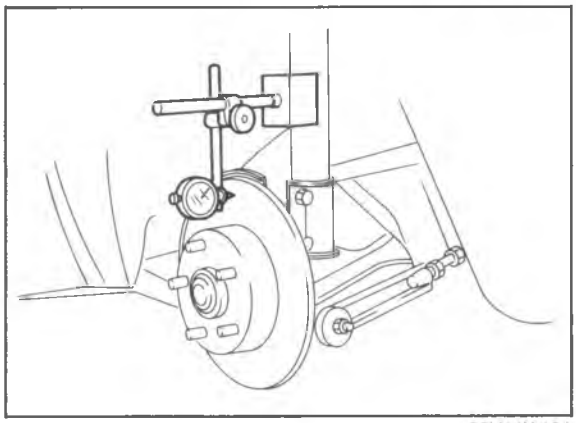

86U11X-104

Disc Plate

1. Runout

Runout: 0.1 mm (0.004 in) max.

Caution

a) There must be no wheel bearing looseness.

b) Measure at the outer edge of the disc plate surface.

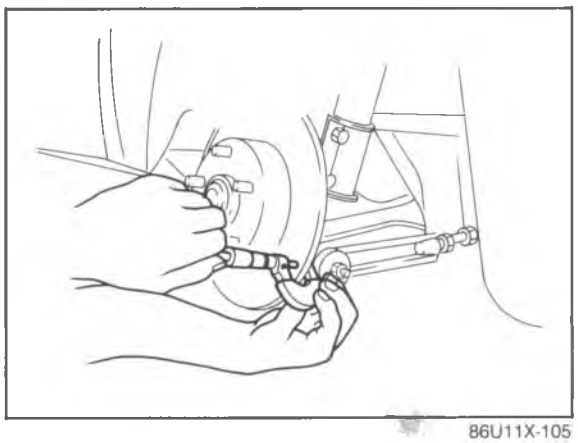

86U11X-105

2. Wear or damage

Thickness

Standard: 10 mm (0.39 in)

Minimum: 8 mm (0.31 in)

INSTALLATION

1. Install in the reverse order of removal, referring to installation note for the specially marked parts.
2. Tighten all nuts and bolts to the specified torque, referring to torque specifications.
3. After installation:
   (1) Add brake fluid and bleed air (Refer to page 11—8.)
   (2) Adjust the parking brake lever stroke. (Refer to page 11—54.)
   (3) Depress the brake pedal a few times and check that the rear brakes do not drag excessively while rotating the wheel.

Note
Refer to page 11—36 for pad installation.

Torque specifications

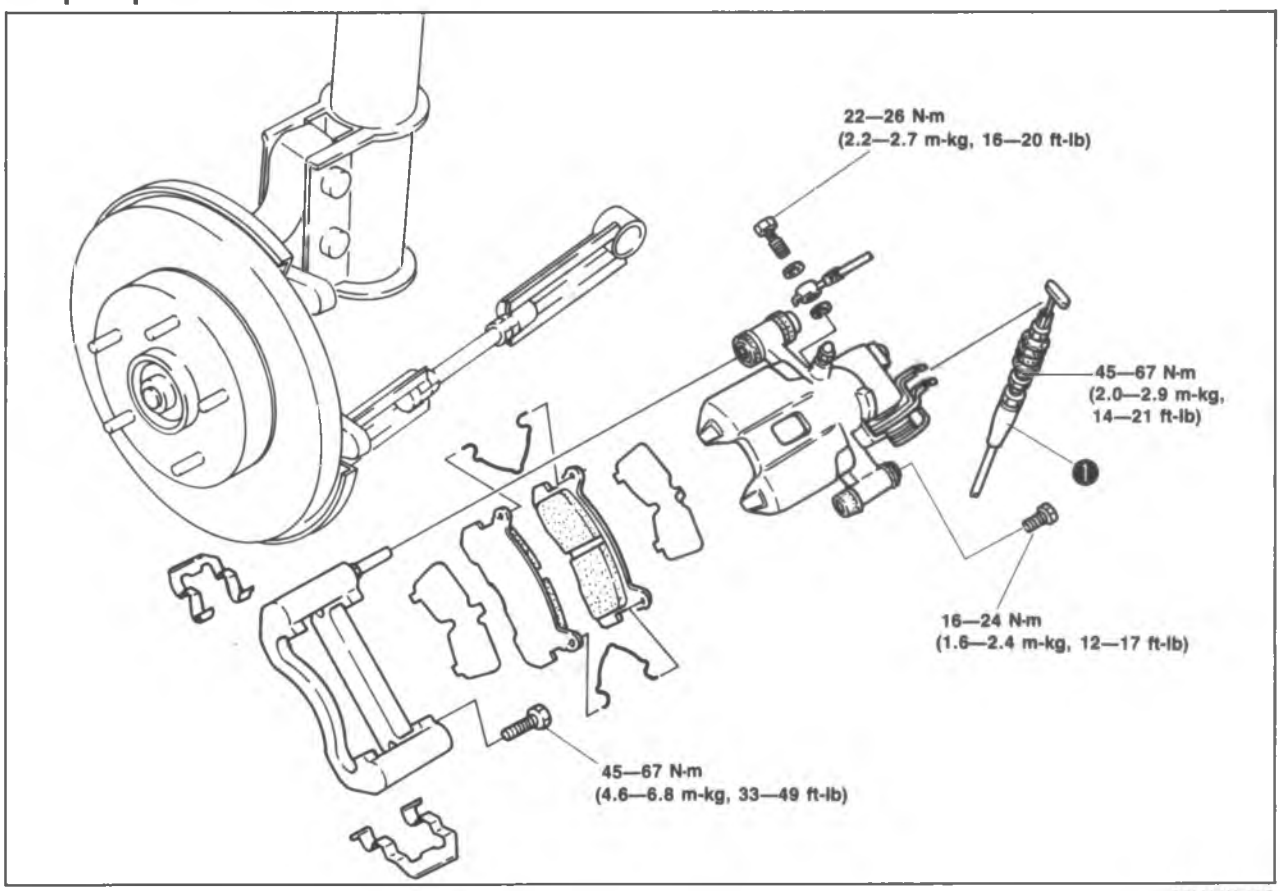

86U11X-106

1. Parking brake cable

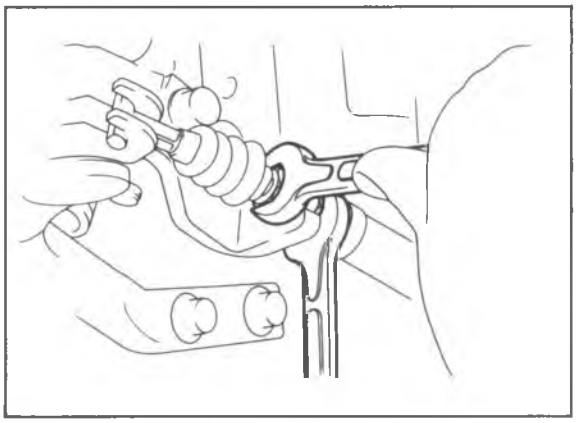

86U11X-107

Installation Note
Parking brake cable
Connect the parking brake cable end onto the operating lever; then fix it to the bracket by the locknut.

Caution
There must be no clearance between the cable end and the operating lever.

REAR DRUM BRAKE

REMOVAL

1. Loosen the wheel lug nuts.
2. Release the parking brakes.
3. Jack up the rear of the vehicle and support it with safety stands.
4. Remove the wheels.
5. Remove in the sequence shown in the figure, referring to removal note for the specially marked parts.

Caution
Do not damage the wheel cylinder dust boots when removing the brake shoes.

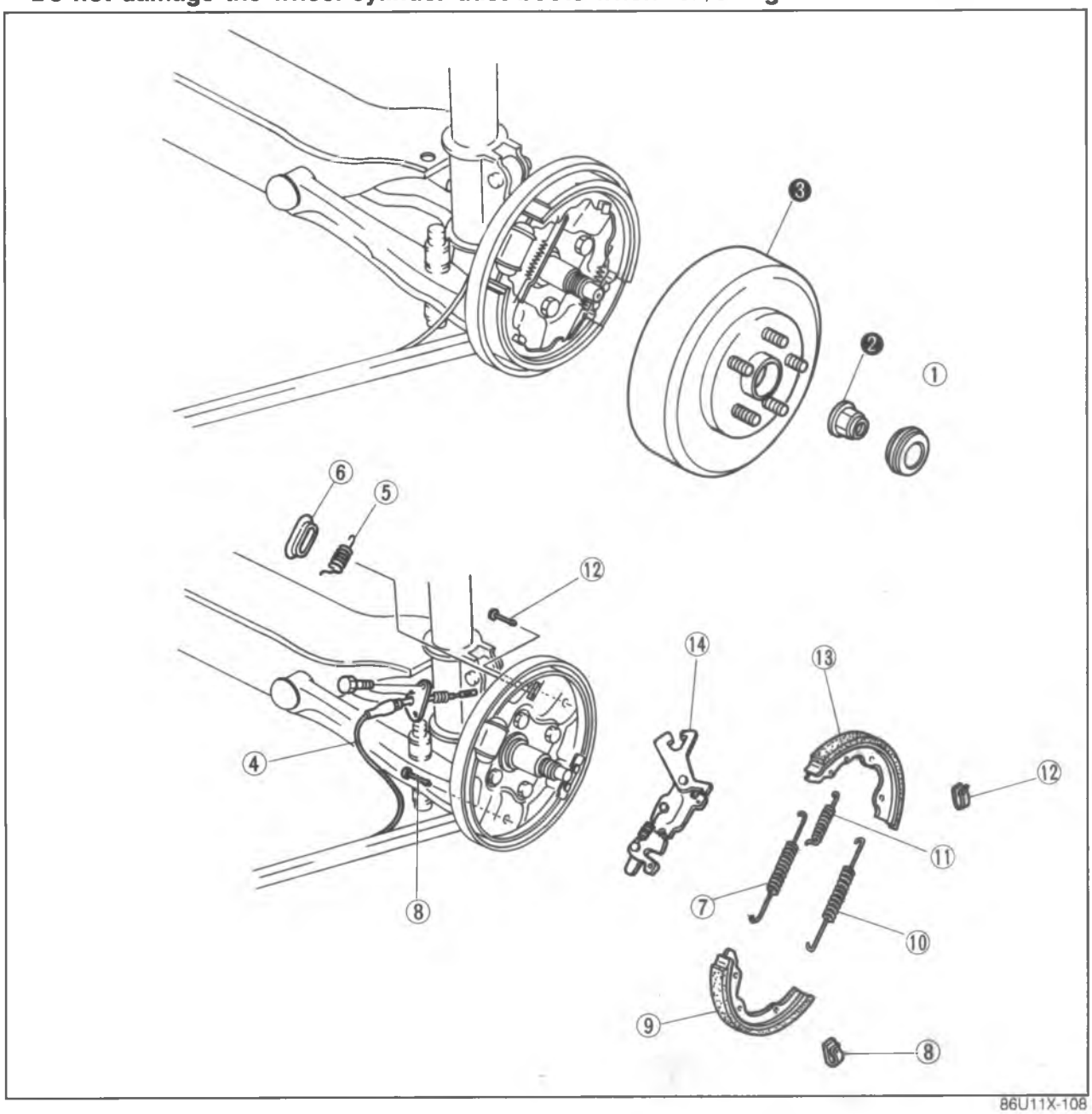

1. Hub cap
2. Locknut
3. Brake drum
4. Parking brake cable
5. Return spring
6. Dust cover
7. Return spring (upper)
8. Hold pin and spring
9. Brake shoe (leading side)
10. Return spring (lower)
11. Anti-rattle spring
12. Hold pin and spring
13. Brake shoe (trailing side)
14. Operating lever assembly

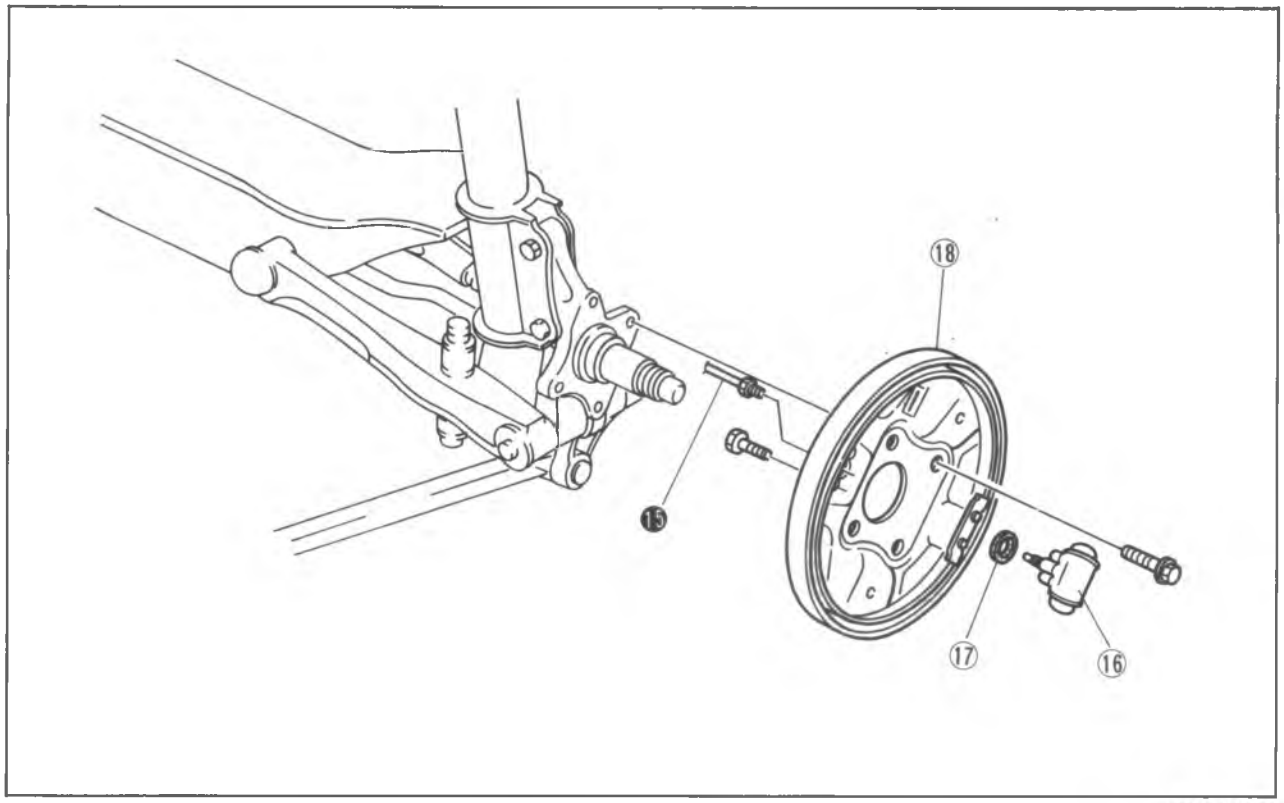

86U11X-109

15. Brake pipe
16. Wheel cylinder assembly
17. Gasket
18. Backing plate

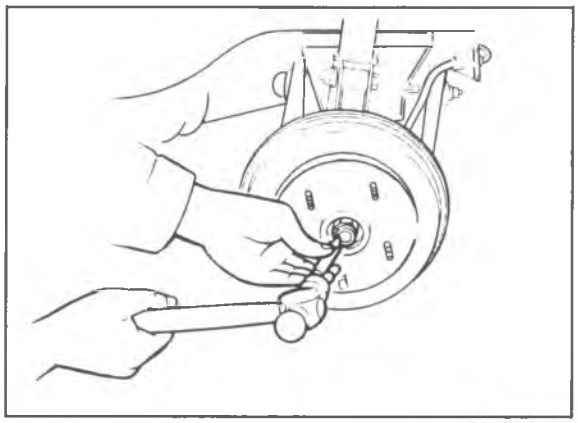

86U11X-110

Removal Note
Locknut
Uncrimp the locknut, and remove it.

Caution
Do not reuse the locknut.

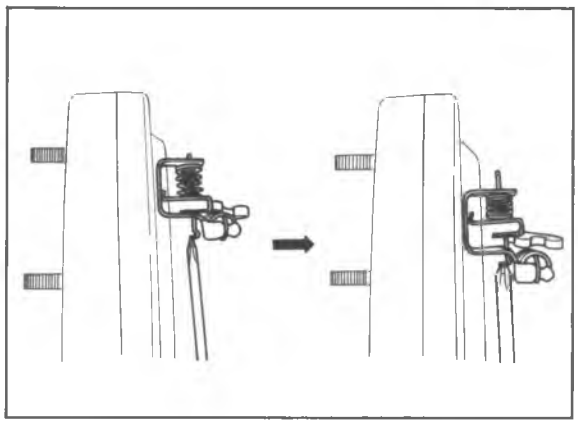

86U11X-111

Brake drum
If the drum is difficult to remove, push the operating lever stopper (at backing plate) upward to release the operating lever and increase shoe clearance.

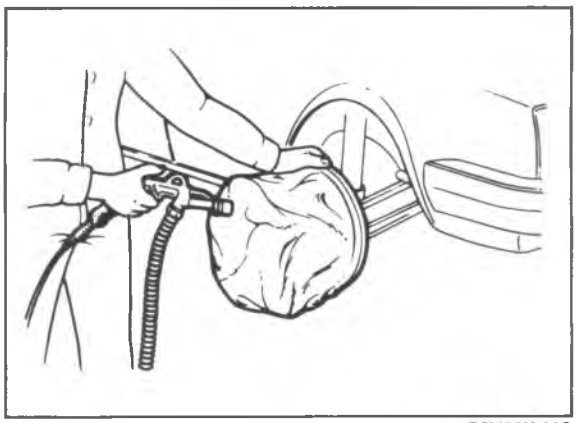

86U11X-112

Cleaning of drum brake assembly
Use a vacuum cleaner or equivalent to clean the brake assembly

Warning
Asbestos dust is a health hazard. When cleaning the brake assembly, do not use compressed air or a brush.

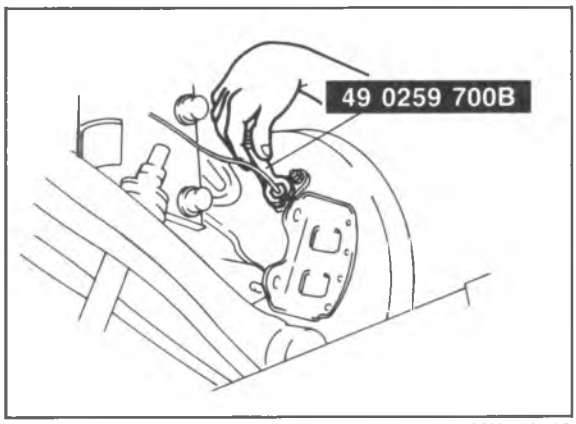

86U11X-113

Brake pipe
Disconnect the brake pipe with the **SST**.

Caution
Brake fluid will damage painted surfaces. If it does get on a painted surface, wipe it off immediately.

DISASSEMBLY AND ASSEMBLY OF WHEEL CYLINDER

1. Disassemble in the sequence shown in the figure.
2. Inspect all parts, referring to inspection note.
3. Assemble in the reverse order of disassembly, referring to assembly note for the specially marked parts.

Caution
Do not damage the piston or cylinder. Do not let foreign material in the cylinder.

Note
Use new piston cups when installing.

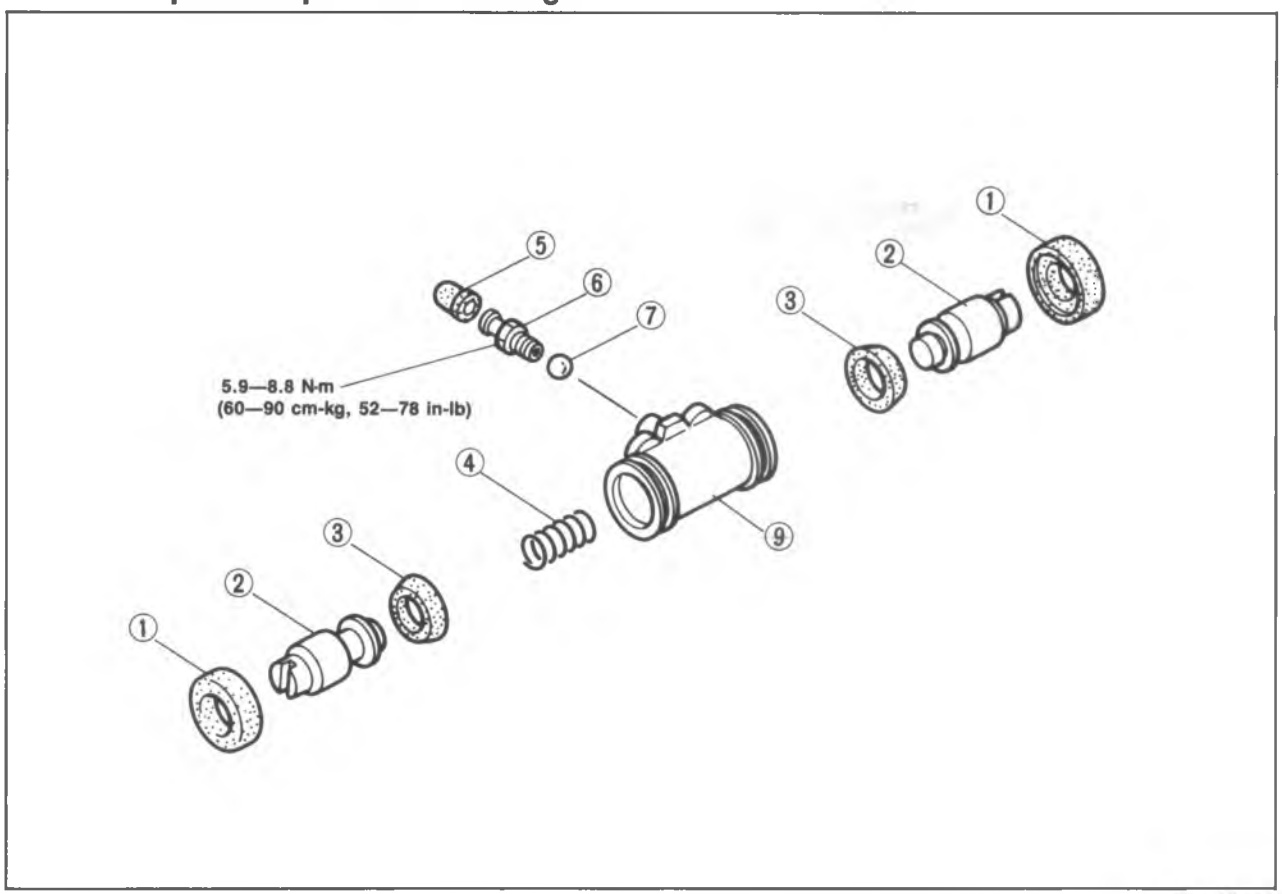

86U11X-114

1. Dust boot
2. Piston
3. Piston cup
4. Spring
5. Rubber cap
6. Bleeder screw
7. Steel ball
8. Wheel cylinder body

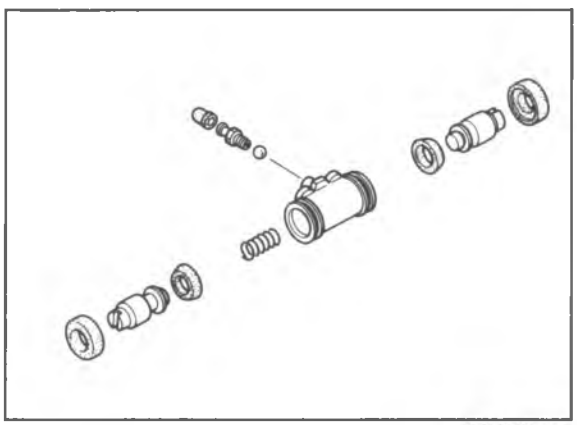

86U11X-115

Inspection Note
Check the following and repair or replace any faulty parts.
1. Weak or broken spring
2. Worn, rusted, or damaged wheel cylinder

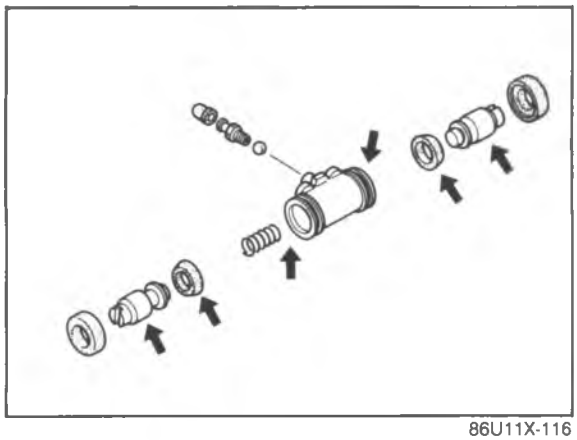

86U11X-116

Assembly Note
Before assembly, apply brake fluid to the following parts:
1. Piston cup
2. Cylinder inner wall
3. Piston

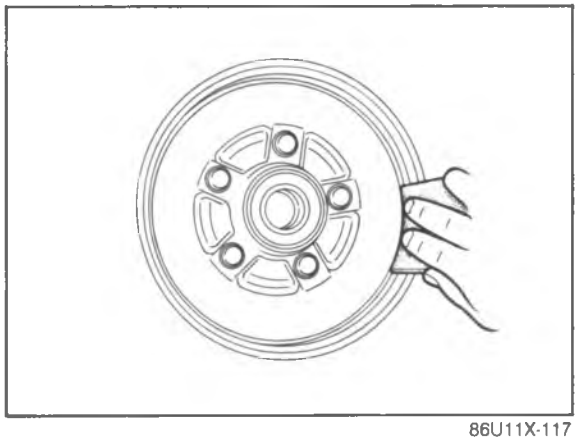

86U11X-117

INSPECTION
Check the following and repair or replace any faulty parts.
1. Scratches, uneven or abnormal wear inside drum

Note
Repair by sanding if the problem is minor.

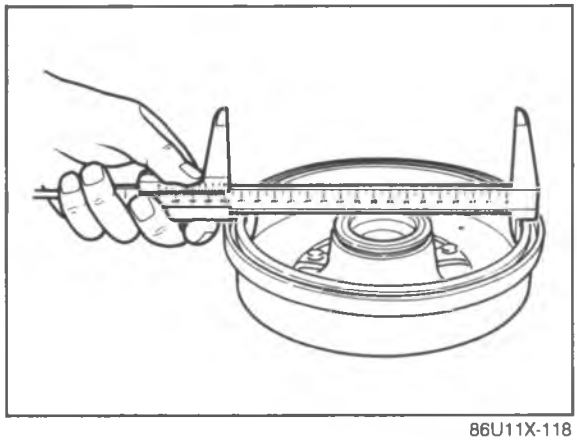

86U11X-118

2. Drum inner diameter

Diameter: 228.6 mm (9.00 in)
Maximum: 230.1 mm (9.06 in)

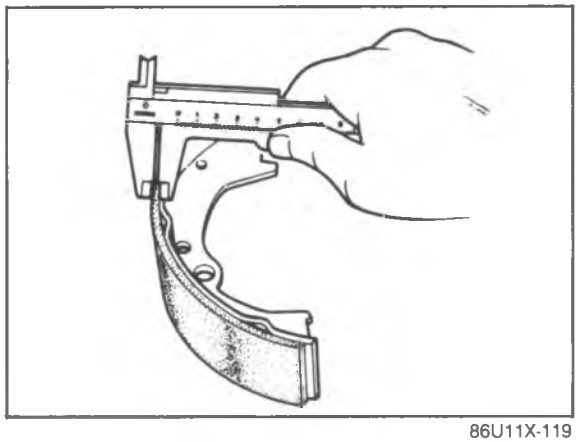

86U11X-119

3. Peeling, cracking, or extremely uneven wear of lining
4. Lining wear

Thickness: 1.0 mm (0.04 in) min.

Caution
When replacing the shoe assembly, replace the left and right shoes at the same time as a set.

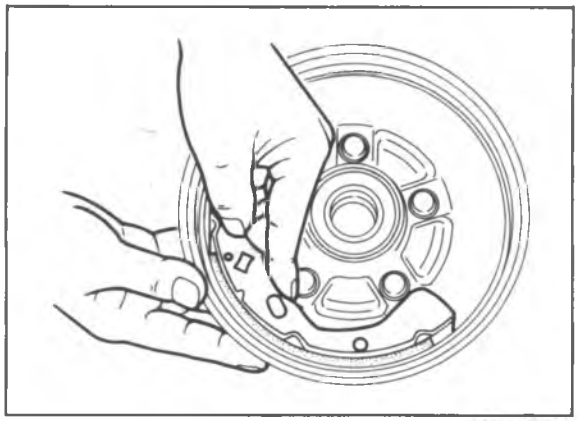

86U11X-120

5. Fit of drum and lining
   (1) Apply chalk to the inside of the drum.
   (2) Rub the shoe against the drum.
   (3) Check lining to drum contact.
   (4) After checking, remove chalk.

INSTALLATION

1. Install in the reverse order of removal.
2. Tighten all nuts and bolts to the specified torque, referring to torque specifications.
3. After installation:
   (1) Add brake fluid and bleed air. (Refer to page 11—8.)
   (2) Adjust the parking brake lever stroke. (Refer page to 11—54.)
   (3) Depress the brake pedal a few times and check that the rear brakes do not drag while rotating the wheel.

Torque specification

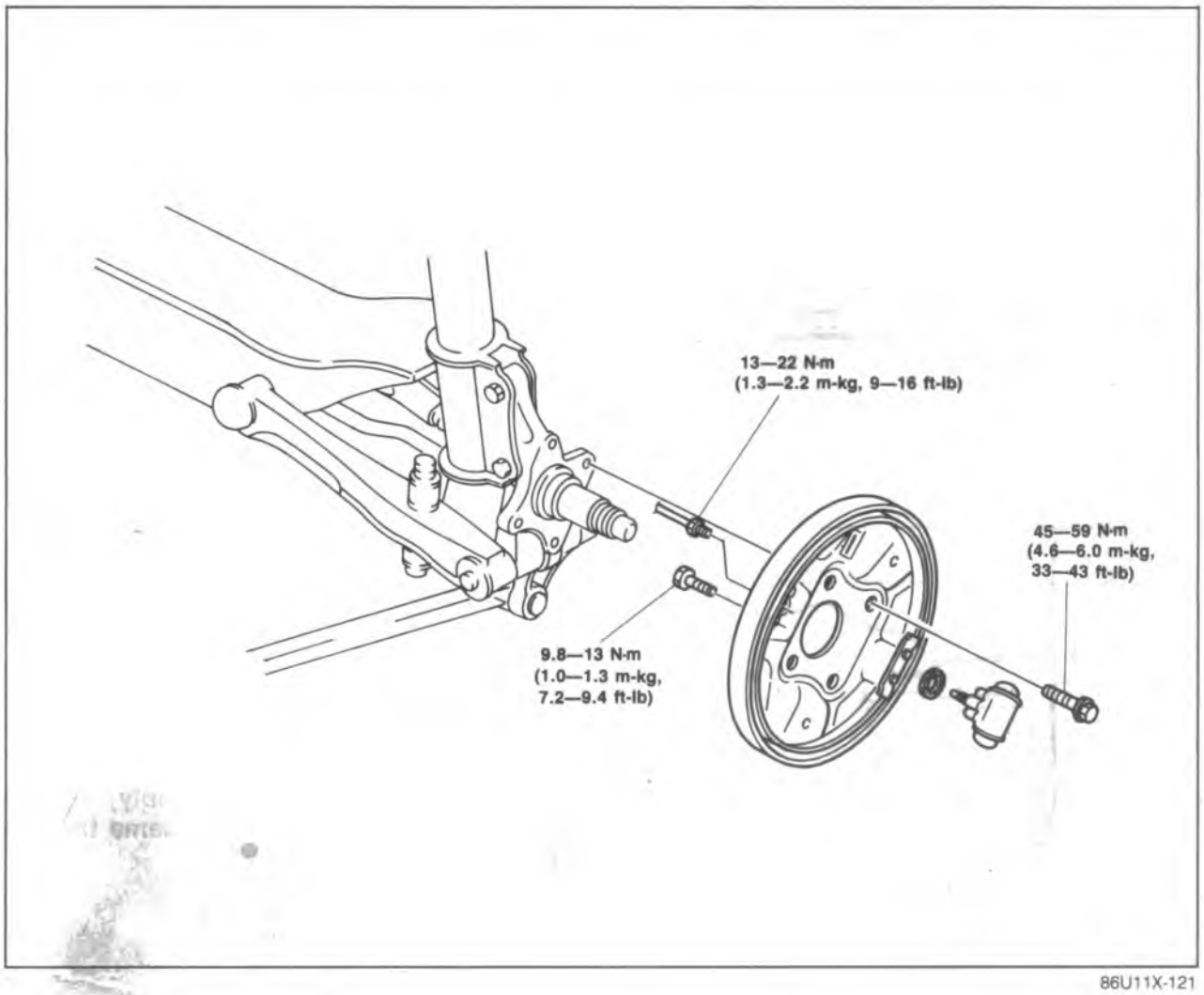

86U11X-121

Torque specification

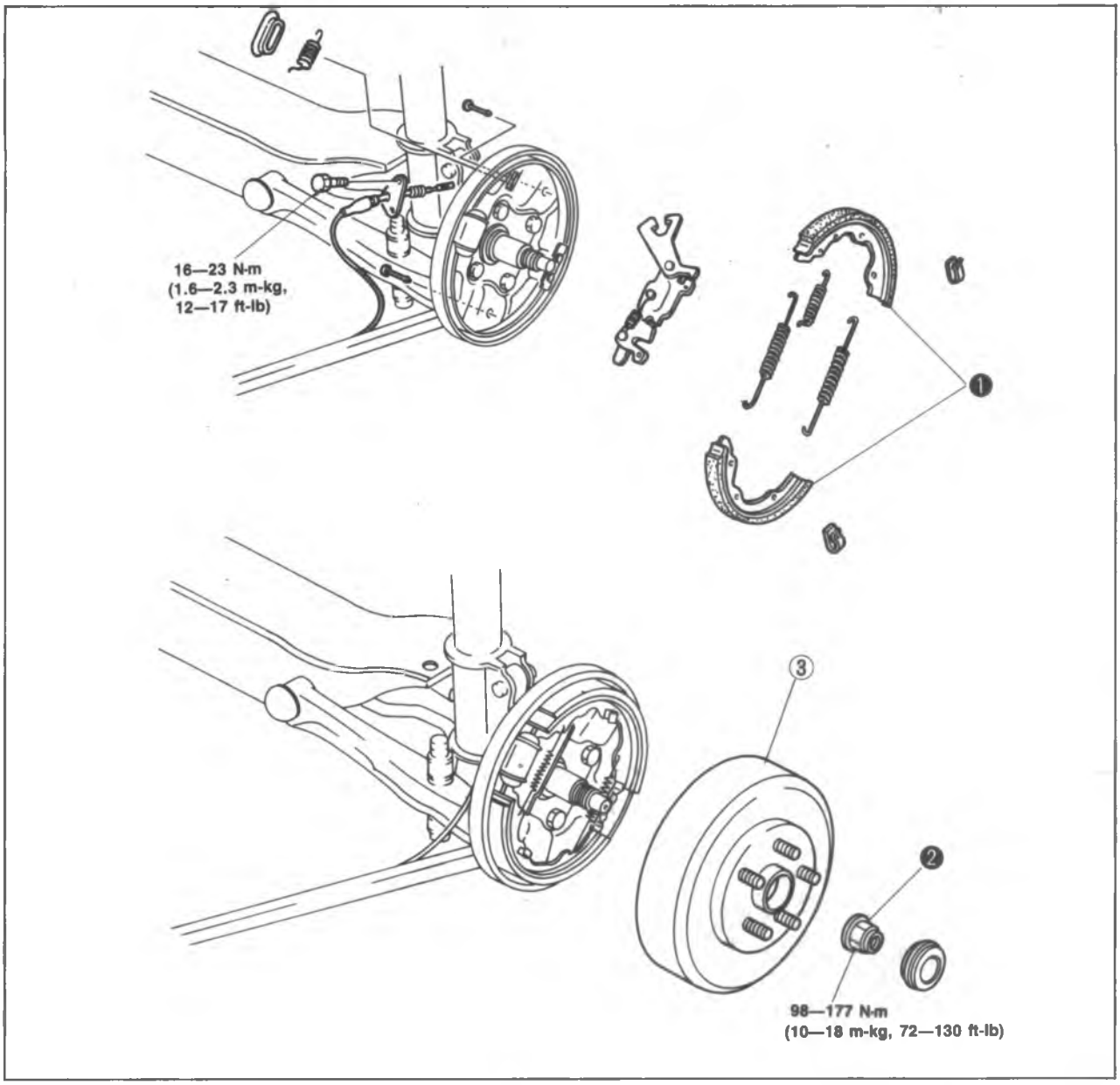

86U11X-122

1. Brake shoe
2. Brake drum
3. Locknut

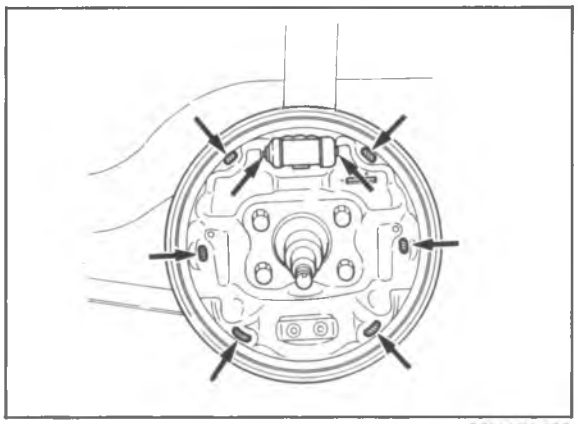

86U11X-123

Installation Note
Brake shoes

1. Apply grease to the following points:
   (1) Shoe and cylinder contact points
   (2) Shoe anchor points
   (3) Projections of backing plate

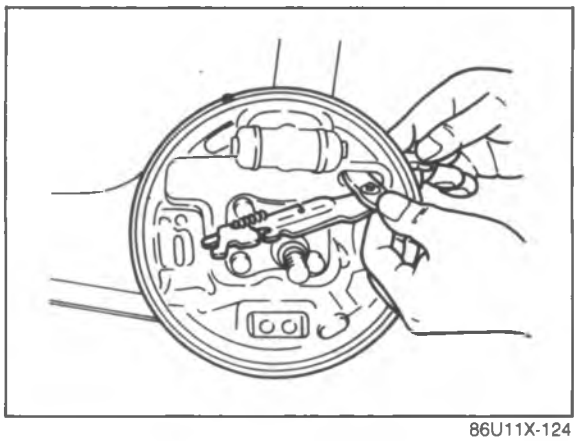

86U11X-124

2. Install the operating lever assembly through the backing plate.
3. Install the return spring to the backing plate (reverse side) and the operating lever.

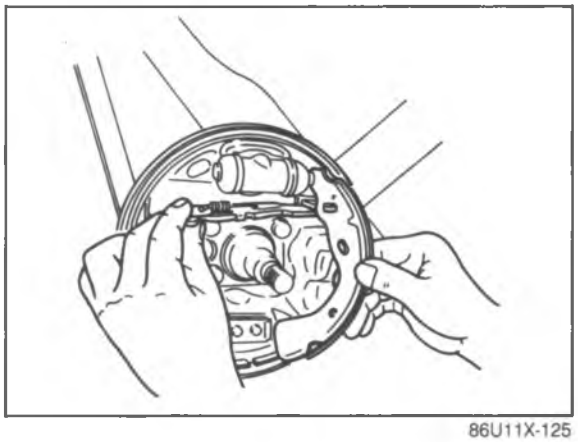

86U11X-125

4. Install the shoe (trailing side) to the operating lever, then to the wheel cylinder and anchor plate.
5. Fix the shoe with the hold spring and hold pin.
6. Install the anti-rattle spring.

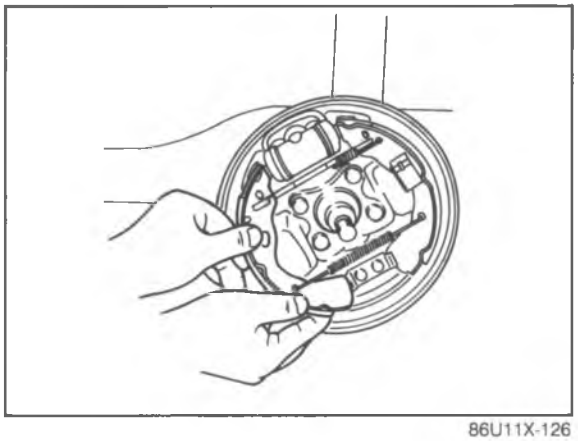

86U11X-126

7. Install the return spring (lower) to the shoes (trailing side and leading side).
8. Install the shoe leading side to the operating lever, then to the wheel cylinder and anchor plate.
9. Fix the shoe with the hold spring and hold pin.

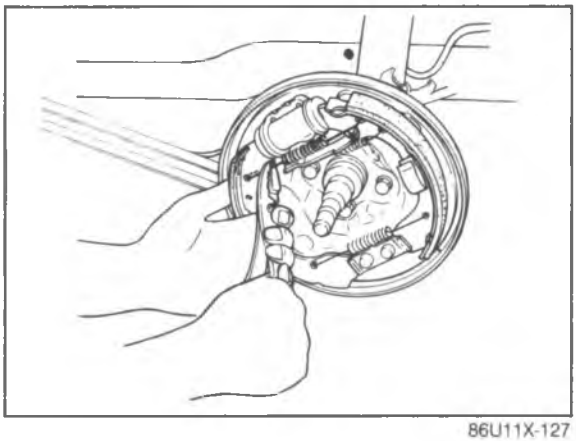

86U11X-127

10. Install the return spring (upper).

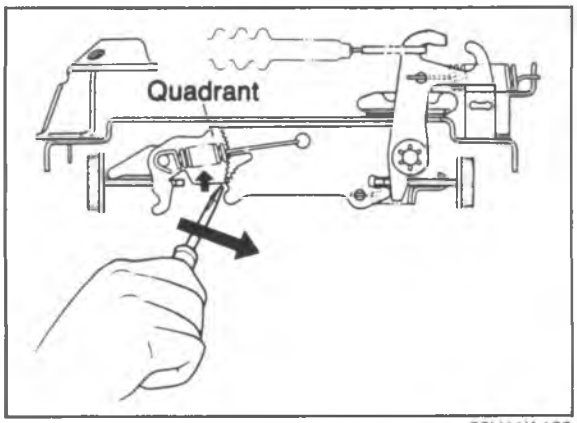

86U11X-128

Brake drum

1. Move the quadrant against the backing plate with a screwdriver and increase the shoe clearance.
2. Install the brake drum.

Note
The shoe clearance will be automatically adjusted by applying parking brakes.

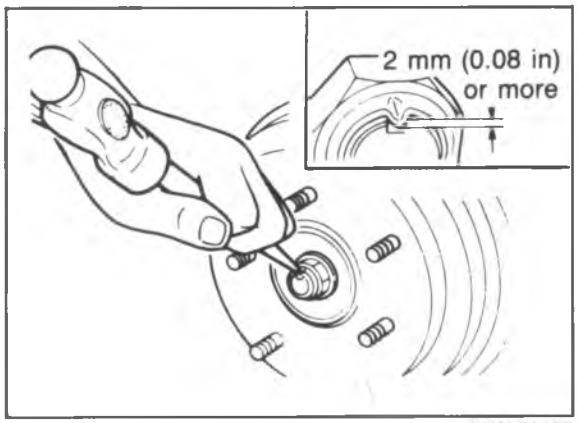

86U11X-129

Locknut

Tighten the new locknut to the specified torque and securely stake it to the spindle groove.

Tightening torque:
98—177 N·m (10—18 m-kg, 72—130 ft-lb)

Caution
Do not use a pointed tool for staking.

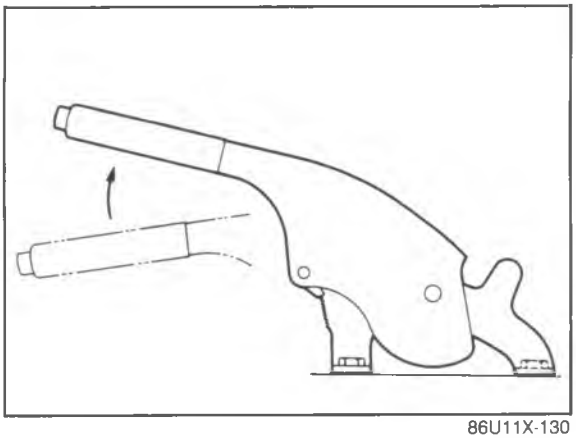

86U11X-130

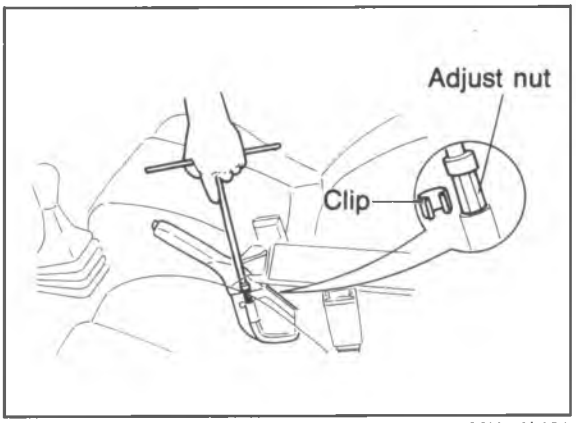

86U11X-131

PARKING BRAKE

ON-VEHICLE MAINTENANCE

Parking Brake Lever Stroke

Inspection

Check that the stroke is within specification when the parking brake lever is pulled with a force of 98N (10kg, 22lb).

Stroke: 5—7 notches

Adjustment

1. Before adjustment, start the engine and depress the brake pedal several times.
2. Stop the engine.
3. Remove the adjust nut clip and turn the adjust nut at the front of the parking cable.
4. After adjustment, check the following points:
   (1) Turn the ignition switch ON, pull the parking brake lever one notch and check that the parking brake warning lamp illuminates.
   (2) Check that the rear brakes do not drag.

REMOVAL AND INSTALLATION OF PARKING BRAKE LEVER

1. Block the wheels firmly.
2. Release the parking brakes.
3. Remove in the sequence shown in the figure.
4. Inspect all parts, referring to inspection note.
5. Install in the reverse order of removal, referring to installation note for the specially marked parts.
6. After installation:
   Adjust the parking lever stroke. (Refer to page 11—54.)

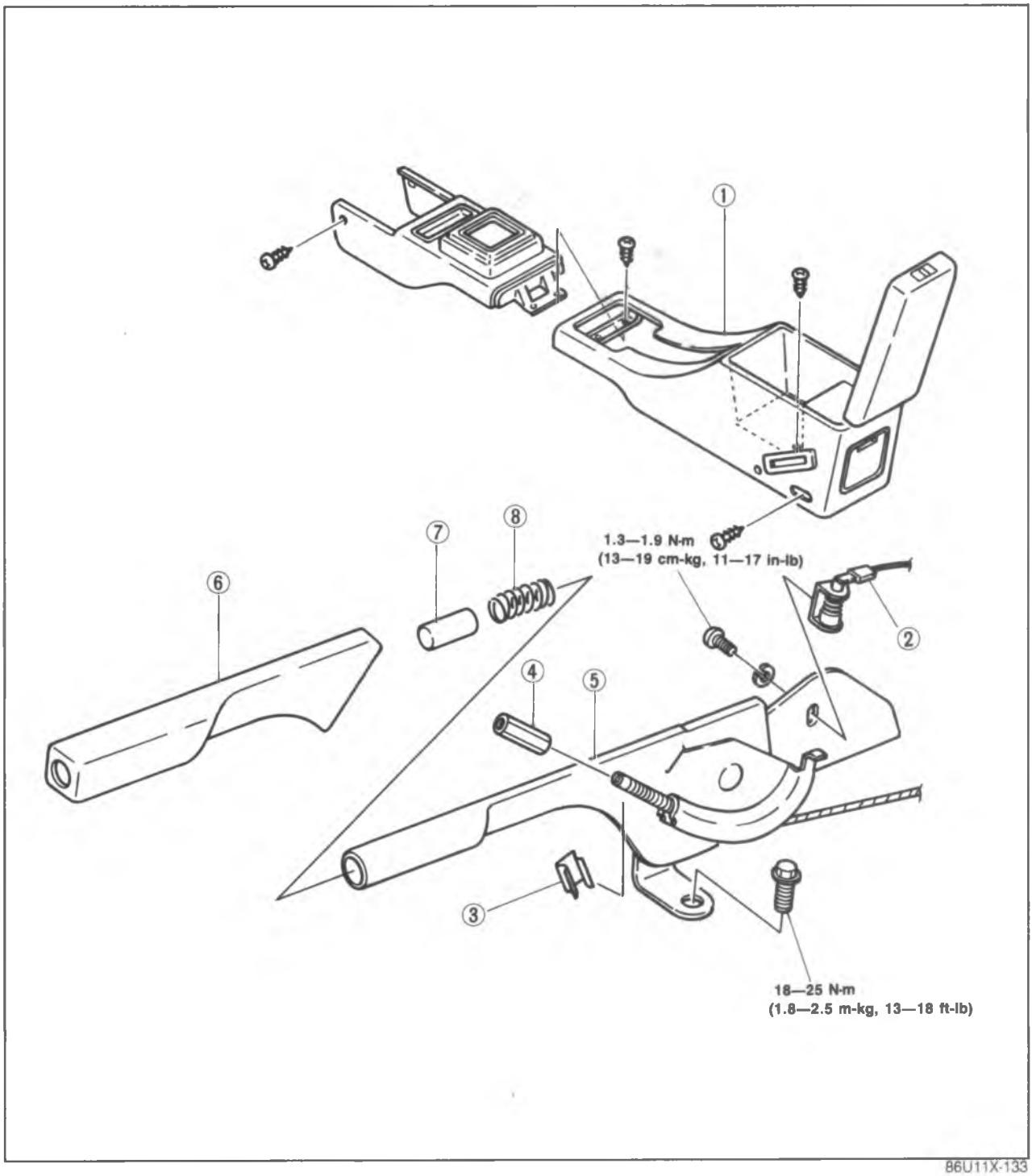

86U11X-133

1. Rear console
2. Parking brake switch
3. Clip
4. Adjust nut
5. Parking brake lever
6. Cover
7. Button
8. Spring

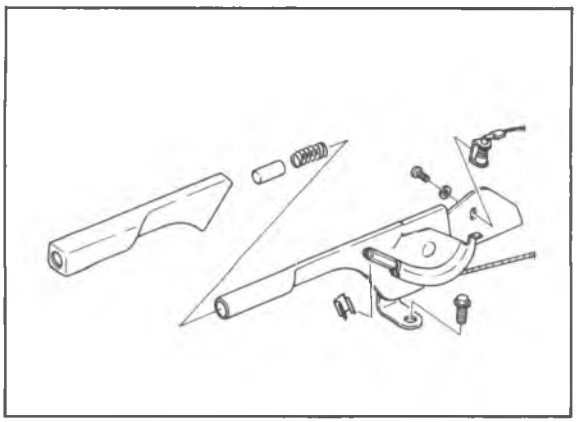

86U11X-134

Inspection Note

Check the following and replace and faulty parts.

1. Sector and ratchet pawl for wear and damage
2. Spring for weakness and breakage

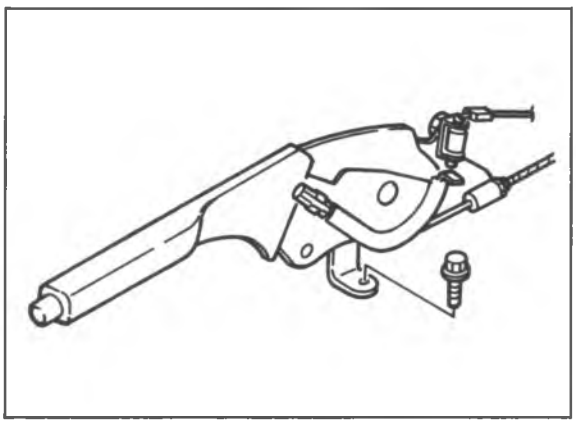

86U11X-135

Installation Note

Parking switch

1. Install the parking switch so that it contacts the parking brake lever when the lever is released.
2. Turn the ignition switch ON, and check that the parking brake warning lamp illuminates with the lever pulled one notch.

REMOVAL OF PARKING BRAKE CABLE

1. Block the wheels firmly
2. Remove the rear console. (Refer to page 11—55.)
3. Release the parking brake and remove the adjust nut of the parking brake lever. (Refer to page 11—55.)
4. Jack up the vehicle and support it with safety stands.
5. Remove the parking brake cable in the sequence shown in the figure.

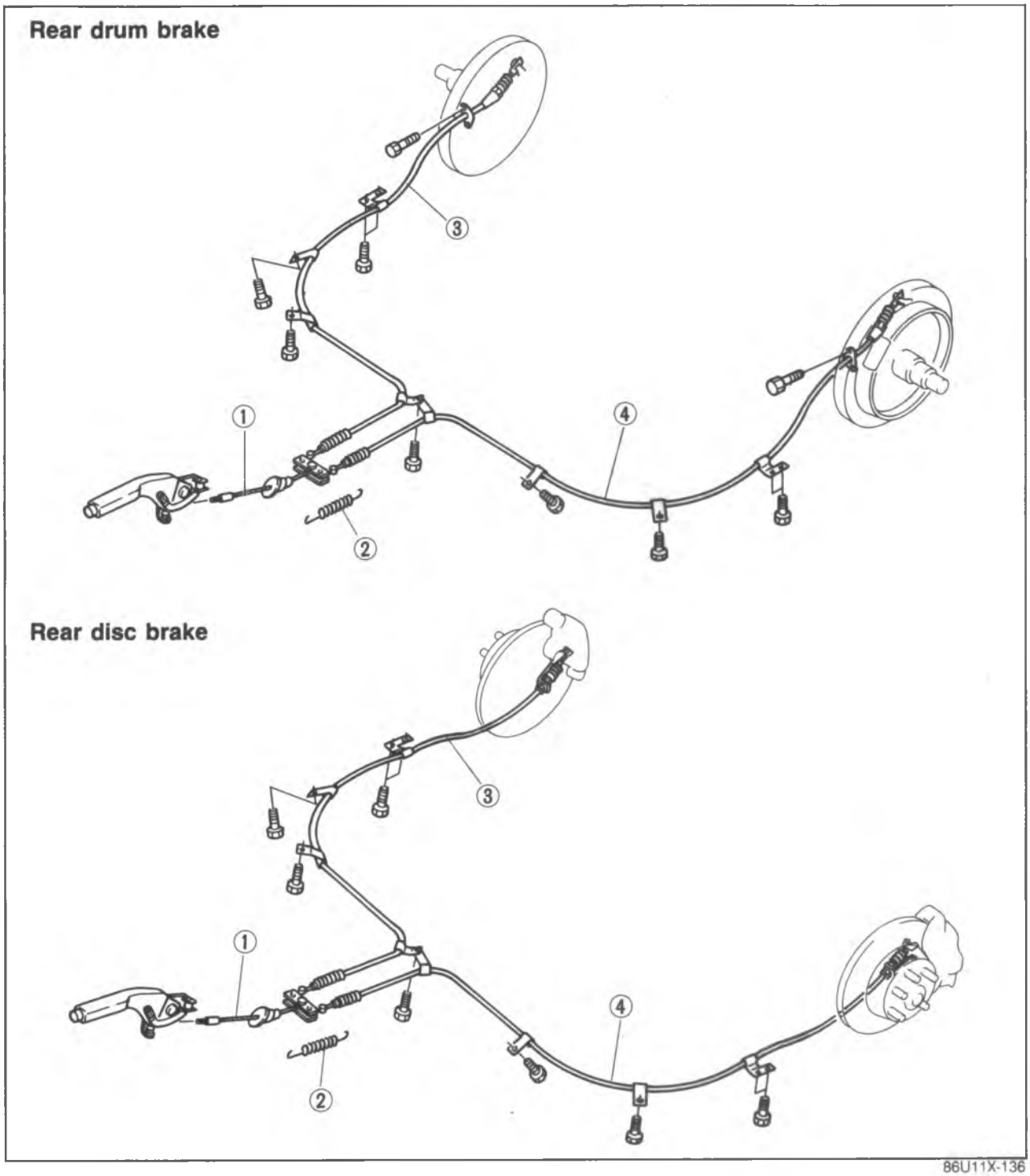

86U11X-136

1. Front parking cable
2. Spring
3. Parking brake cable (left)
4. Parking brake cable (right)

INSTALLATION OF PARKING BRAKE CABLE

1. Install in the reverse order of removal, referring to installation note for the specially marked parts.
2. Tighten all nuts and bolts to the specified torque, referring to torque specifications.
3. After installation:
   (1) Adjust the parking brake lever stroke. (Refer to page 11—54.)
   (2) Depress the brake pedal a few times and check that the rear brakes do not drag while rotating the wheels.

Torque specifications

Rear drum brake

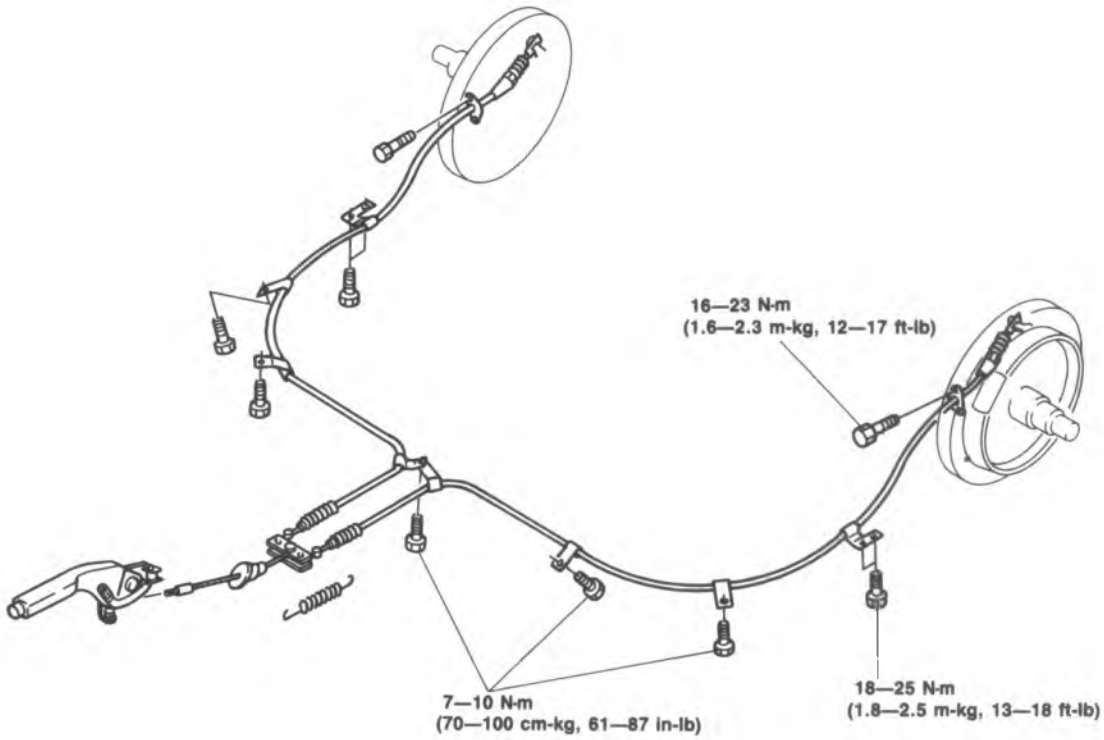

86U11X-137

Rear disc brake

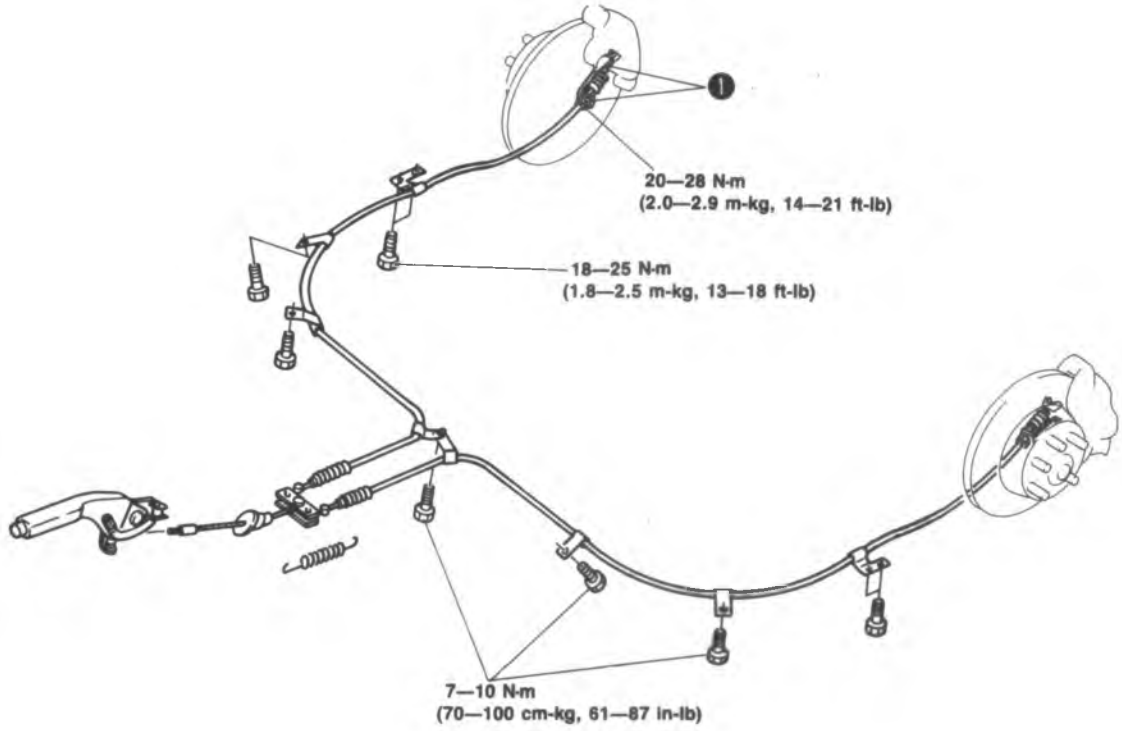

86U11X-138

1. Parking brake cable (rear disc brake)

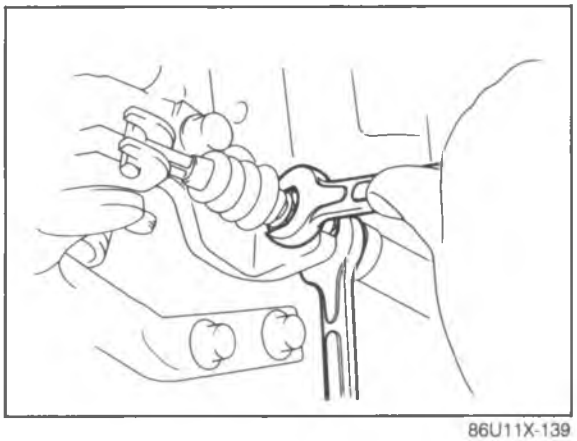

86U11X-139

Installation Note
Parking brake cable (Rear disc brake)
Connect the cable end to the operating lever; then tighten the locknut.

Tightening torque:
20—28 N·m (2.0—2.9 m-kg, 14—21 ft-lb)

Caution
There must be no clearance between the cable end and the operating lever.

ANTI-LOCK BRAKE SYSTEM (ABS)

STRUCTURAL VIEW

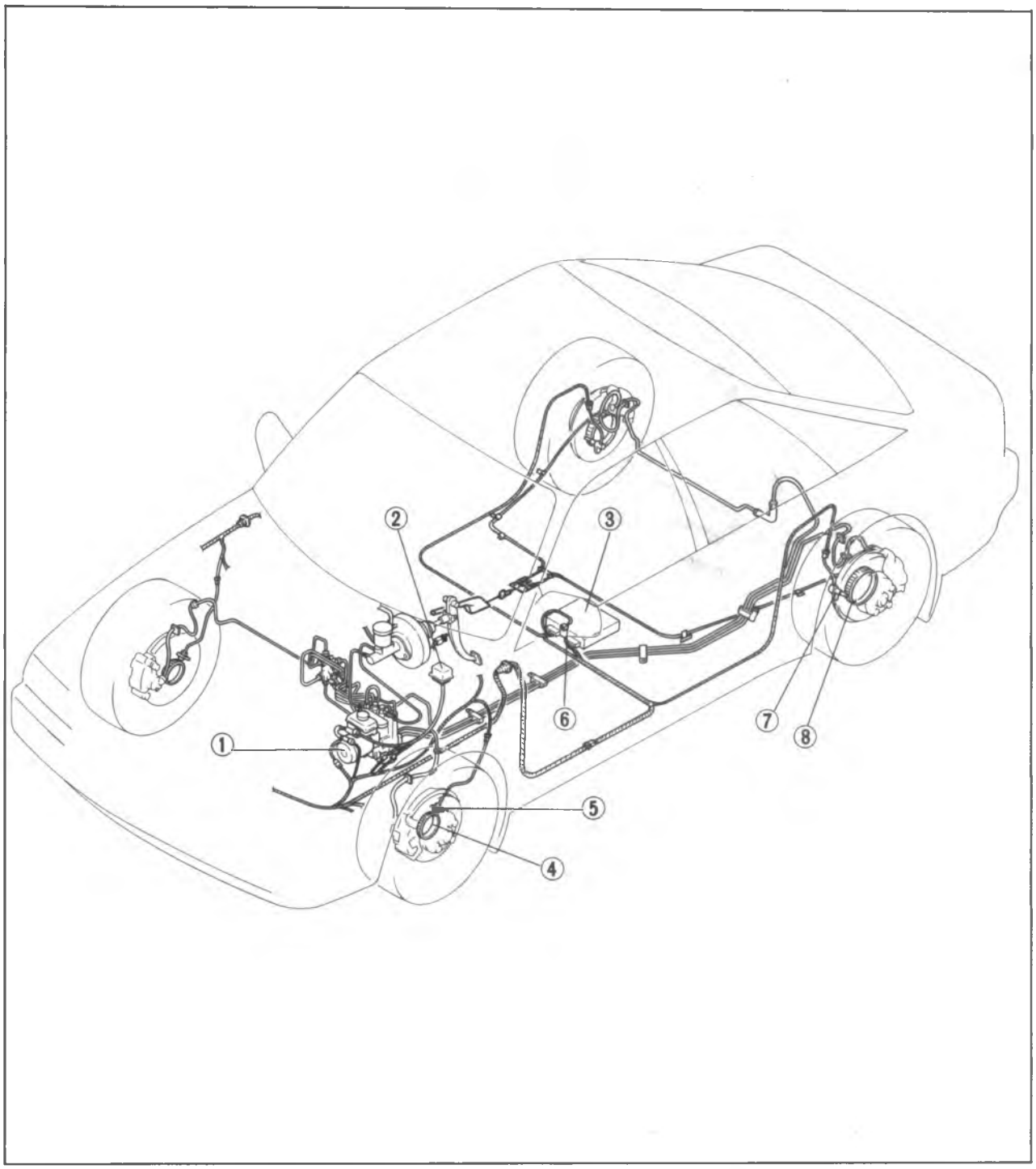

86U11X-140

1. Hydraulic unit
2. Relay box
3. Control unit
4. Sensor rotor (front)
5. Wheel speed sensor (front)
6. Check connector
7. Wheel speed sensor (rear)
8. Sensor rotor (rear)

WIRING DIAGRAM

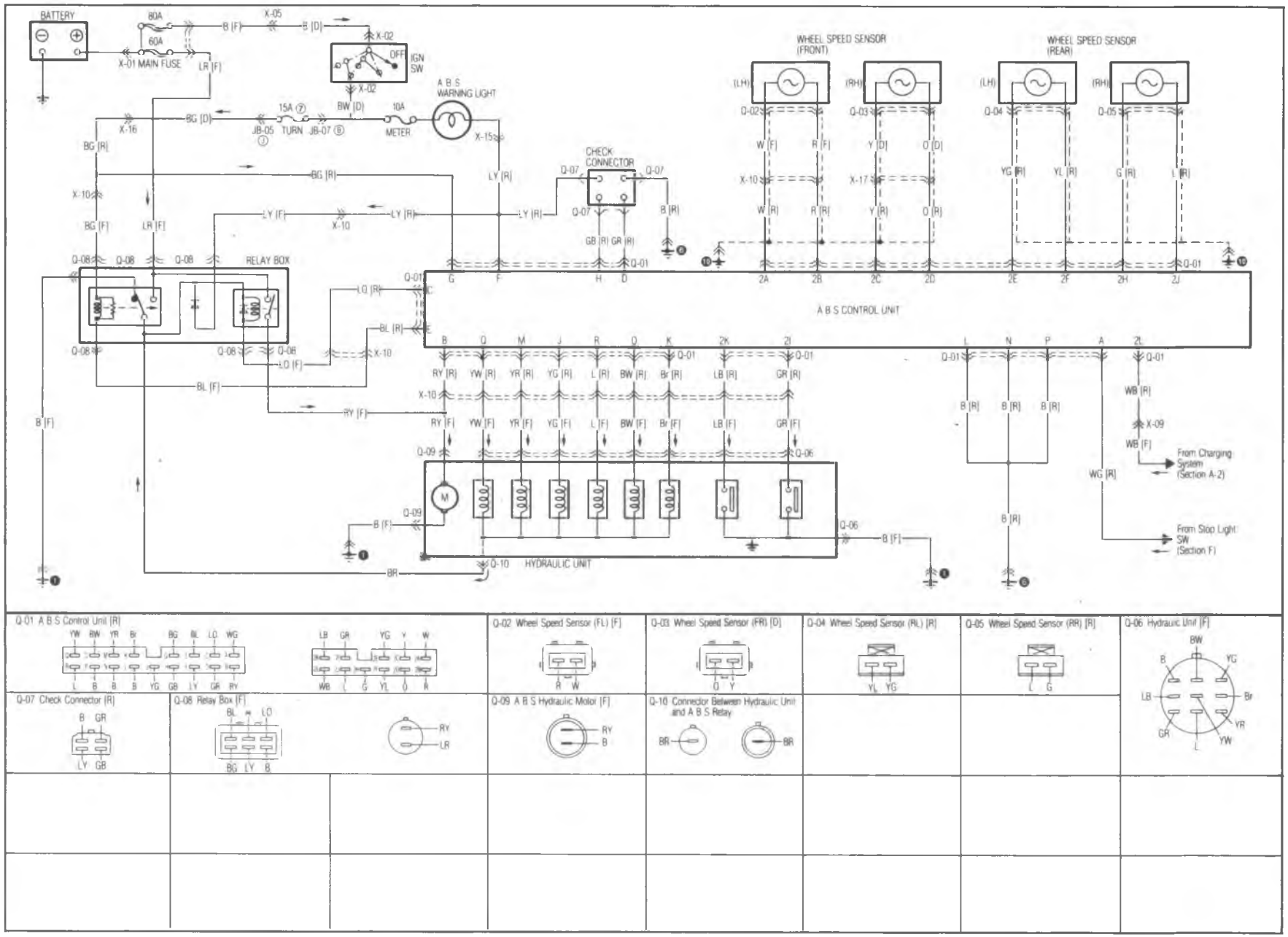

TROUBLESHOOTING

Precaution

Conditions that are not malfunctions

1. If may happen that vibration is felt in the steering wheel, body and /or brake pedal when the ABS is functioning; such vibration is simply an indication that the system is functioning.
2. Sound of the pump motor operating, accumulator pressure being released, or the relay operating may be heard from the engine compartment when the engine is started as the system is being automatically checked.
3. The ABS pump motor may be automatically activated even though the ABS is not operting.
4. The ABS warning light may illuminate under any of the following conditions:
   - When the vehicle is traveling on snow or ice with the parking brake activated or a brake dragging at one wheel.
   - When different size tires are used.
   - When tires of different gripping performance are used.
   - When (while the vehicle is jacked up or stuck) the front wheels only are spun for 20 seconds or more.
   - When there is insufficient battery voltage.

   Note
   Under the above conditions, the warning light will not illuminate a second time when the ignition is switched OFF then back ON, and there will be no memory entry to the control unit of a problem.

Troubleshooting notes

The ABS is composed of electrical components, mechanical components (hydraulic unit), and the components of the standard brake system.
Fundamentally, malfunction of the ABS electrical or mechanical components is judged by the self-diagnosis function within the ABS control unit. And malfunctions are indicated by the warning light in the instrument panel.
The location of a malfunction is indicated by the technician switching the system to the diagnosis-indication mode.
The self-diagnosis and indication functions must be used when diagnosing malfunctions of the ABS.

86U11X-142

Troubleshooting Main Flow Chart

Check for ABS warning light for operating.
- Turn ignition switch OFF to ON, and check that ABS warning light illuminates constantly.

Other than illuminates constantly

Warning light	Possible cause
Does not illuminate at all	Refer to page 11—75.
ON / OFF / 1 sec	Alternator L terminal output Wiring harness (ALT-control unit) Control unit
ON / OFF / 1 sec	Relay box wiring harness (warning light-control unit) Control unit

OK

Check that ABS has failure or not.
- Start engine, and observe flashing of warning light.

Flashing (Past failure)

Illuminates constantly (Present failure)

No illumination (Not diagnosed)

Read and note diagnosis indication. (Refer to page 11—75.)
- Set system for diagnosis indication mode before reading warning light and voltmeter indications.
- Treat repeated indications as one failure.

Indicated

Erase one memory. (Refer to page 11—75.)

Not indicated

Read and note diagnosis indication. (Refer to page 11—75.)
Set system for diagnosis indication mode before reading warning light and voltmeter indications.

Determine failures with diagnosis table. (Refer to page 11—64.)

Repair failures with flow chart. (Refer to page 11—65.)

ABS is usually operating correctly.
Consult table below when ABS failure is still suspected.

System	Possible cause
ABS	Brake light switch Both rear wheel speed sensors Control unit Proportioning valve in hydraulic unit
Other than ABS	Refer to troubleshooting guide on page 11—5.

86U11X-143

Diagnosis Table

Note
Flashing of the warning light shows past failure, and its illumination shows present failure occurring.

Diagnosis Indication		Possible failure		Flow chart No.
Warning light	Voltmeter			
ON / OFF	12V / 0V	Hydraulic unit Harness	Right front wheel speed sensor	ABS-1
			Left front wheel speed sensor	ABS-2
			Rear wheel speed sensor	ABS-3
		Right front sensor rotor		ABS-4
		Left front sensor rotor		ABS-5
		Right rear sensor rotor		ABS-6
		Left rear sensor rotor		ABS-7
		Hydraulic unit Harness Control unit connector (11-pin)		ABS-8
		Relay box Hydraulic unit Harness		ABS-9
				ABS-10
				ABS-11
				ABS-12
				ABS-13
				ABS-14
		Hydraulic unit Harness Control unit		ABS-15
				ABS-16
		Control unit		ABS-17
				ABS-18
	No signal; failure conditions not stored in memory	Control unit Control unit connector (17-pin) Battery capacity Alternator output voltage Wiring harness (warning light-control unit-check connector)		Inspect, and repair or replace as necessary
		No problem	When warning light does not illuminate with engine running and no jumper wire	

86U11X-144

Flow Chart (Refer to Wiring Diagram, Page 11—61.)

ABS-1	Possible failure
	Right front wheel speed sensor, Harness, Hydraulic unit

Disconnect Q-01 (11-pin) connector. Check continuity at harness side.

Q-01 (11-pin)		Continuity
Y (2C)	Ground	No

NG → Repair harness. (Control unit — Right front sensor)

OK ↓

Measure resistance at harness side.

Q-01 (11-pin)		Resistance
Y (2C)	O (2D)	800—1200 Ω

NG → Disconnect Q-03. Measure resistance at sensor.

Q-03		Resistance
Y	O	800—1200 Ω

NG → Replace right front wheel speed sensor.

OK → Repair harness. (Control unit — Right front sensor)

OK ↓

Check followings*
- Clearance between sensor and rotor standard: 0.3—1.1 mm (0.012—0.043 in)
- Objects sticking to sensor or rotor
- Damaged sensor or rotor
- Sensor installation
  Tightening torque:
  16—23 N·m
  (1.6—2.3 m-kg, 12—17 ft-lb)

NG → Repair or replace as necessary

*All conditions can be verified as follows, if an AC voltmeter is available.
1. Jack up vehicle.
2. Measure sensor voltage while rotating right front wheel one revolution per second.

Q-01 (11-pin)		Voltage (AC)
Y (2C)	O (2D)	More than 0.25V

OK ↓

Connect Q-01 (11-pin) connector. Jump GB to B at Q-07 connector. Start engine. Check that warning light stays ON. Drive vehicle and check that warning light flashes (0.25 sec ON OFF) at 15 km/h (9 mph).

NG → Check Q-01 connector. or Replace control unit.

OK ↓

Replace hydraulic unit.

86U11X-145

ABS-2	Possible failure
	Left front wheel speed sensor, Harness, Hydraulic unit

Disconnect Q-01 (11-pin) connector.
Check continuity at harness side.

Q-01 (11-pin)		Continuity
W (2A)	Ground	No

NG → Repair harness (Control unit — Left front sensor)

OK ↓

Measure resistance at harness side.

Q-01 (11-pin)		Resistance
W (2A)	R (2B)	800—1200 Ω

NG → Disconnect Q-02
Measure resistance at sensor.

Q-02		Resistance
W	R	800—1200 Ω

NG → Replace left front wheel speed sensor.

OK → Repair harness. (Control unit — Left front sensor)

OK ↓

Check followings*
- Clearance between sensor and rotor standard: 0.3—1.1 mm (0.012—0.043 in)
- Objects sticking to sensor or rotor
- Damaged sensor or rotor
- Sensor installation
  Tightening torque:
  16—23 N·m
  (1.6—2.3 m-kg, 12—17 ft-lb)

NG → Repair or replace as necessary

*All conditions can be verified as follows, if an AC voltmeter is available.
1. Jack up vehicle.
2. Measure sensor voltage while rotating left front wheel one revolution per second.

Q-01 (11-pin)		Voltage (AC)
W (2A)	R (2B)	More than 0.25V

OK ↓

Connect Q-01 (11-pin) connector.
Jump GB to B at (Q-07) connector.
Start engine.
Check that warning light stays ON.
Drive vehicle and check that warning light flashes (0.25 sec ON OFF) at 15 km/h (9 mph).

NG → Check Q-01 connector. or Replace control unit.

OK ↓

Replace hydraulic unit.

86U11X-146

ABS-3	Possible failure
	Rear wheel speed sensor, Harness, Hydraulic unit

Disconnect Q-01 (11-pin) connector.
Check continuity at harness side.

Q-01 (11-pin)		Continuity
G (2H)	Ground	No
YG (2E)		

NG → Repair harness (Control unit — Rear speed sensor)

OK ↓

Measure resistance at harness side.

Q-01 (11-pin)		Resistance
YG (2E)	YL (2F)	800—1200 Ω
G (2H)	L (2J)	

NG → Disconnect Q-09 and Q-05
Measure resistance at sensor.

Q-09, Q-05		Resistance
YG	YL	800—1200 Ω
G	L	

NG → Replace rear wheel speed sensor.

OK → Repair harness. (Control unit — Rear speed sensor)

OK ↓

Check followings*
- Clearance between sensor and rotor standard: 0.3—1.1 mm (0.012—0.043 in)
- Objects sticking to sensor or rotor
- Damaged sensor or rotor
- Sensor installation
  Tightening torque:
  16—23 N·m
  (1.6—2.3 m-kg, 12—17 ft-lb)

NG → Repair or replace as necessary

*All conditions can be verified as follows, if an AC voltmeter is available.
1. Jack up vehicle.
2. Measure sensor voltage while rotating rear wheel one revolution per second.

R wheel	Q-01 (11-pin)		Voltage (AC)
Left	YG (2E)	YL (2F)	More than 0.25V
Right	G (2H)	L (2J)	

OK ↓

Connect Q-01 (11-pin) connector.
Jump GB to B at Q-07 connector.
Start engine.
Check that warning light stays ON.
Drive vehicle and check that warning light flashes (0.25 sec ON OFF) at 15 km/h (9 mph).

NG → Check Q-01 connector. or Replace control unit.

OK ↓

Replace hydraulic unit.

86U11X-147

ABS-4	Possible failure Right front sensor rotor

Check rotor teeth for damage. — NG → Replace rotor.

OK

Check right front wheel speed sensor for proper installation. — NG → Install sensor properly.

86U11X-148

ABS-5	Possible failure Left front sensor rotor

Check rotor teeth for damage — NG → Replace rotor.

OK

Check left front wheel speed sensor for proper installation. — NG → Install sensor properly.

86U11X-149

ABS-6	Possible failure Right rear sensor rotor

Check rotor teeth for damage. — NG → Replace rotor.

OK

Check right rear wheel speed sensor for proper installation. — NG → Install sensor properly.

86U11X-150

ABS-7	Possible failure Left rear sensor rotor

Check rotor teeth for damage. — NG → Replace rotor.

OK

Check left rear wheel speed sensor for proper installation. — NG → Install sensor properly.

86U11X-151

ABS-8	Possible failure
	Hydraulic unit, Harness

Check Q-01 (11-pin) connector for proper connection.

NG → Connect Q-01 (11-pin) connector properly.

OK

Disconnect GB from B at Q-07 connector. Measure elasped time from engine starting until warning light illuminates. Listen for motor operation.

Other than below. → Check harness (Control unit—Hydraulic unit—Ground) → Repeat operations 10 times that start and run engine for 30 sec. Check that warning light illuminates within 102 sec from engine start.

Illuminated → Illuminates after indicating failure mode. Motor operates.

Not illuminated → No problem

Illuminates Motor does not operate.

Disconnect Q-01 (11-pin) connector. Check continuity at harness side.

Q-01 (11-pin)		Continuity
LB (2K)	Ground	Yes
GR (2L)	Ground	No

NG → Replace control unit.

OK → Check Q-06 connector proper connection.

Illuminates after indicating failure mode. Motor operates.

Disconnect Q-01 (11-pin) connector. Check continuity at harness side.

Q-01 (11-pin)		Continuity
LB (2K)	Ground	No
GR (2L)	Ground	No

OK → Check Q-06 connector proper connection.

NG → Replace control unit.

Illuminates after 90—105 sec.

Disconnect Q-01 (11-pin) connector. Check continuity at harness side.

Q-01 (11-pin)		Continuity
LB (2K)	Ground	No

NG → Replace control unit.

Ok → Repeat operations 10 times that start and run engine for 30 sec. Check that warning light illuminates within 102 sec from engine start.

Illuminated → Check Q-06 connector proper connection.

Not illuminates → No problem.

Check Q-06 connector proper connection.

OK → Check harness. (Control unit—Hydraulic unit—Ground)

NG → Connect Q-06 connector properly.

Check harness. (Control unit—Hydraulic unit—Ground)

OK → Replace hydraulic unit

NG → Repair harness.

Replace hydraulic unit

86U11X-152

ABS-9	Possible failure
	Relay box, Hydraulic unit, Harness

Disconnect Q-01 (17-pin) connector.
Disconnect battery.
Turn ignition switch ON.
Check continuity at harness side.

Q-01 (17-pin)		Continuity
RY (B)	BG (G)	No

NG → Check relay box. (Refer to page 11—76.)

- **NG** → Replace relay box.
- **OK** → Repair harness. (Control unit—Relay box—Hydraulic unit)

OK ↓

Check that resistance between LO (C) of harness side and ground changes when reversing ⊕ and ⊖ test-leads.

NG → (Check relay box)

OK ↓

Check continuity at harness side.

Q-01 (17-pin)		Continuity
RY (B)	Ground	Yes

NG → Disconnect Q-09 connector. Check continuity at motor side.

Q-09		Continuity
RY	Ground	Yes

- **NG** → Repair harness. (Motor—Ground)
- **OK** ↓ Check continuity at motor side.

Q-09		Continuity
RY	B	Yes

- **NG** → Replace hydraulic unit.
- **OK** ↓ Repair harness. (Control unit—Relay box—Hydraulic unit)

OK ↓

Relay control unit.

86U11X-153

ABS-10	Possible failure
	Relay box, Hydraulic unit, Harness

Check harness.
(Control unit—Relay box—Ground)

NG → Repair harness.

86U11X-154

ABS-11	Possible failure
	Relay box, Hydraulic unit, Harness

Disconnect Q-01 (17-pin) connector.
Disconnect battery.
Check continuity at harness side.

Q-01 (17-pin)		Continuity
LO (C)	BG (G)	No

NG → Check relay box. (Refer to page 11—76.)

NG → Replace relay box.

OK → Repair harness. (Control unit—Relay box—Hydraulic unit)

OK → Check resistance at harness side.

Q-01 (17-pin)		Resistance
BL (E)	Ground	Approx. 75Ω

NG → Disconnect Q-08 connector. Check continuity at relay side.

Q-08		Continuity
BL	Ground	No

NG → Replace relay box.

OK → Repair harness. (Control unit—Relay box—Hydraulic unit)

OK → Replace control unit.

86U11X-155

ABS-12	Possible failure
	Relay box, Hydraulic unit, Harness

Check harness.
(Control unit—Relay box)

NG → Repair harness.

86U11X-156

ABS-13	Possible failure
	Relay box, Hydraulic unit, Harness

Check Q-10, Q-06, and Q-08 connectors for proper connection.

- NG → Repair connector.
- OK ↓

Disconnect Q-01 (17-pin) connector.
Disconnect battery.
Measure resistance at harness side.

Q-01 (17-pin)		Resistance
BL (E)	BG (G)	approx. 75 Ω

- NG → Check relay box. (Refer to page 11—76)
  - NG → Replace relay box.
  - OK → Repair harness. (Control unit—Relay box or Ignition switch—Hydraulic unit)
- OK ↓

Check resistance between BL (C) and YG (J) of harness side.

Q-01 (17-pin)		Resistance
LO (C) ⊕ probe	YG (J) ⊖ probe	approx 65 Ω

- NG → (Check relay box)
- OK ↓

Turn ignition switch ON.
Check continuity at harness side.

Q-08 (6-pin)	Q-08 (2-pin)	Continuity
BG	LR	Yes

- NG → Repair harness. (Relay box—Battery)
- OK ↓

Disconnect Q-09 and Q-08 (2-pin) connectors.
Check continuity at harness side.

Q-09	Q-08 (2-pin)	Continuity
RY	RY	Yes

- NG → Repair harness. (Hydraulic unit—Relay box)
- OK ↓

Check continuity at hydraulic unit side.

Q-09		Continuity
RY	Ground	No

Q-09		Resistance
RY	B	approx. 0.1 Ω

- NG → Replace hydraulic unit
- OK → Check relay box. (Refer to page 11—76.)
  - OK → Replace control unit.
  - NG → Replace relay box

86U11X-157

ABS-14	Possible failure
	Relay box, Hydraulic unit, Harness

Start and stop engine 5 times with not depressing brake pedal, and check that motor operates occasionaly and warning light stays ON.

OK → Go to ABS-13.

NG ↓

Check Q-10, Q-06 and Q-08 connectors for proper connection. Check related harness for open or short circuit.

NG → Repair harness. (Battery—Relay box—Hydraulic unit)

86U11X-73

ABS-15	Possible failure
	Control unit, Harness, Hydraulic unit

Disconnect Q-10 and Q-01 (17-pin and 11-pin) connectors.
Check continuity at hydraulic unit side.

Q-10		Continuity
BR	Ground	No

NG → Repair harness. (Hydraulic unit—Control unit)

OK ↓

Disconnect Q-06 connector.
Check continuity at hydraulic side.

Q-10		Continuity
BR	Ground	No

NG → Replace hydraulic unit.

OK ↓

Check Q-06 connector for proper connection.

NG → Repair Q-06 connector.

OK ↓

Disconnect Q-06 connector. Measure resistance at hydraulic unit side.

Q-06	Q-10	Resistance
Br BW L YG YR YW	BR	approx. 3 Ω

OK → Connect Q-06 and Q-10 connectors.
Check continuity at harness side.

Q-01 (17-pin)		Continuity
Br (K) BW (O) L (R) YG (J) YR (M) YW (Q)	LO (C)	Yes (Less then 100 Ω)

NG → Repair harness. (Control unit—Hydraulic unit)

OK → Replace control unit.

NG ↓

Replace hydraulic unit.

86U11X-159

ABS-16	Possible failure
	Control unit, Harness

Disconnect Q-01 (17-pin) and Q-10 connectors.
Check that hydraulic unit and harness resistance does not fluctuate when moving harness.

Q-01 17-pin)	Q-10	Resistance
Br (K) BW (O) L (R) YG (J) YR (M) YW (Q)	BR	Must be constant

NG → Repair connector or harness. (Q-01 (17-pin), Q-10)

OK → Replace control unit.

86U11X-160

ABS-17	Possible failure
	Control unit

Replace control unit.

ABS-18	Possible failure
	Control unit

Replace control unit.

86U11X-161

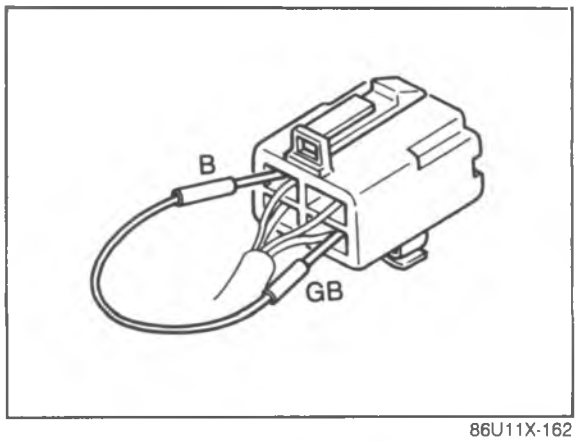

86U11X-162

DIAGNOSIS INDICATION MODE

To obtain the diagnosis indication mode, proceed as follows:

1. Remove the driver's seat.
2. Connect terminal wires (GB) and (B) of the check connector (at control unit) with a jumper wire.
3. Start the engine.

Note
The system is now in the diagnosis indication mode.

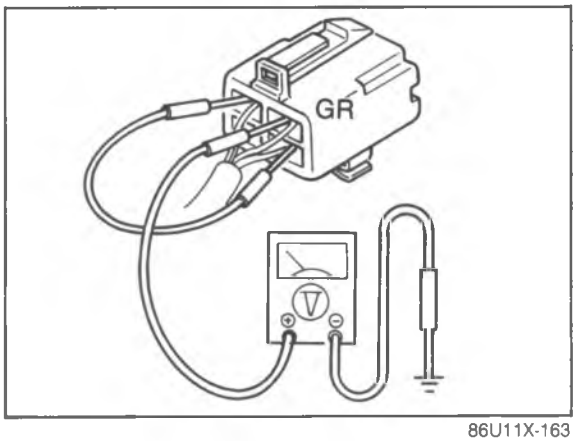

86U11X-163

4. Observe the warning light for illumination or count flashing.
5. Connect an analog voltmeter to terminal wire (GR), and count the times voltage is output.

Note
a) The voltmeter will fluctuate between 0V and approx. 12V.
b) Determine the failure and flow chart no. with the Diagnosis Table. (Refer to page 11—64.)

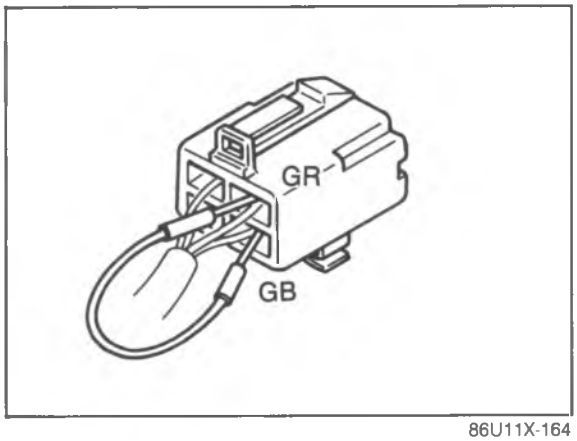

86U11X-164

MEMORY CANCEL

Note
Failures are contained in the control unit memory. They are not erased when the battery is disconnected. Follow the procedure below to erase them.

1. Connect the terminal wires (GR) and (GB) of the check connector with a jumper wire.
2. Turn the ignition switch ON.
3. Check that the warning light is illuminated, and wait 1—2 seconds.
4. Turn the ignition switch OFF.

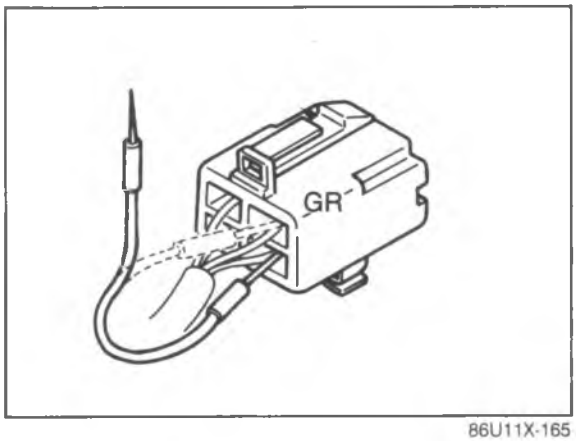

86U11X-165

5. Disconnect the jumper wire from terminal wire (GR).
6. Start the engine and wait for the warning light to go OFF.

Note
a) One failure memory is erased each time the above steps are taken.
b) If the warning light illuminates or blinks after step 6, read and note diagnosis indication. The memory has the capacity for storing 32 failures.

7. Turn the ignition switch OFF.
8. Remove the jumper wire.

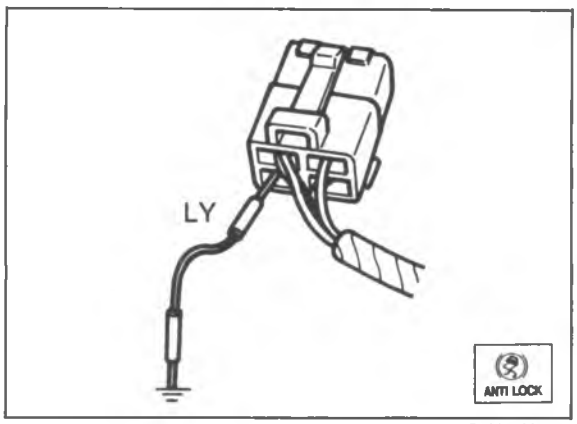

86U11X-166

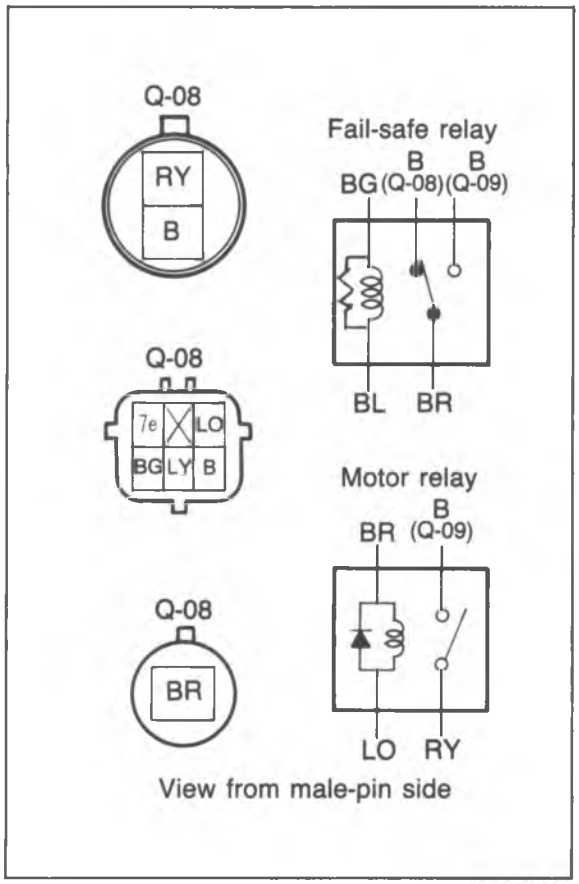

86U11X-167

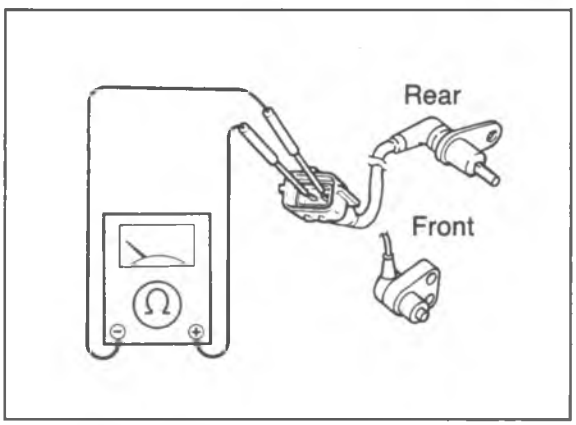

86U11X-168

ABS WARNING LIGHT

Inspection for No Illumination

1. Check that other warning lights illuminate. If not, check the METER 10A fuse for burning out.
2. Turn the ignition switch ON.
3. Ground the LY terminal of the check connector with a jumper wire.
4. Check that the ABS warning light illuminates. If not illuminated, check the bulb and harness (battery → check connector).
5. Check for 12V at F (LY) terminal of the control unit connector.

If the voltage is not as specified, check the harness (bulb → control unit).
If the voltage is as specified, replace the relay box and the control unit.

RELAY BOX

Inspection of Fail-safe Relay

1. Check for continuity of the relay with an ohmmeter. Replace the relay box if necessary.

Connecting to		BR	B (Q-08)	B (Q-09)
12V	Ground			
—	—	○	○	
BG	BL	○		○

○—○: Indicates continuity

2. Check that the resistance between terminal wire (BR) and terminal wire (LY) changes when reversing the ⊕ and ⊖ test-leads. Replace the relay box if necessary.

Inspection of Motor Relay

1. Check for continuity of the relay with an ohmmeter. Replace the relay box if necessary.

Connecting to		RY	B (Q-09)
12V	Ground		
—	—		
BR	LO	○	○

○—○: Indicates continuity

2. Check that the resistance between terminal wire (BR) and terminal wire (LO) changes when reversing the ⊕ and ⊖ test-leads. Replace the relay box if necessary.

WHEEL SPEED SENSOR

Inspection

1. Measure the resistance of the sensor with an ohmmeter.

   Resistance: 800—1,200 Ω

2. If the resistance is not within specification, replace the sensor.
3. Check that the harness is not twisted and does not contact other objects when turning the steering wheel fully.

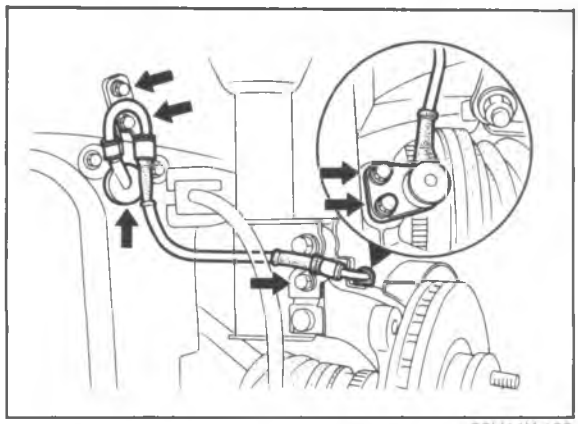

86U11X-169

Removal of Front Wheel Speed Sensor

1. Remove the wheel and tire.
2. Remove the parts shown in the figure, and remove the sensor from the knuckle.

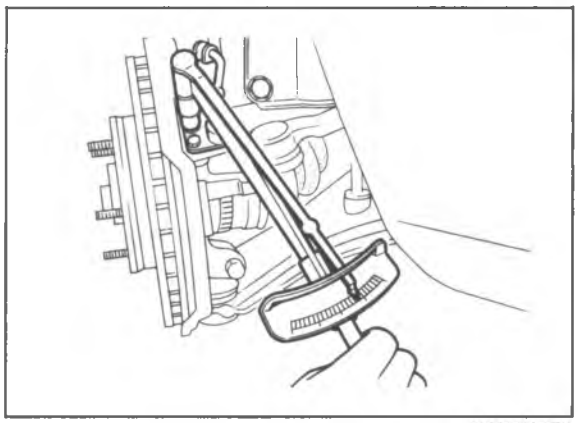

86U11X-170

Installation of Front Wheel Speed Sensor

1. Install the sensor to the knuckle.

   Tightening torque:
   16—23 N·m (1.6—2.3 m-kg, 12—17 ft-lb)

   Caution
   The left and right sensors are not interchangeable. L or R is indicated on the bracket.

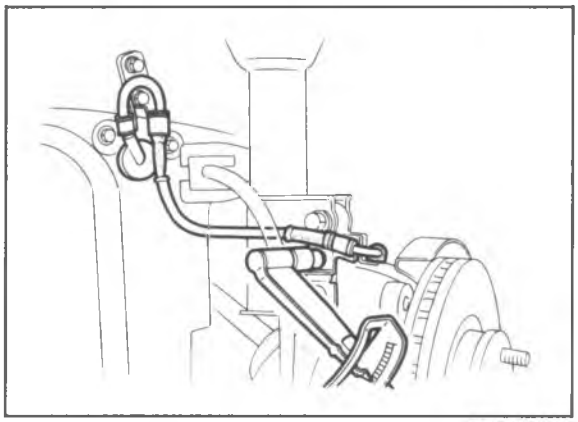

86U11X-171

2. Install the sensor harness bracket onto the knuckle.

   Tightening torque:
   16—23 N·m (1.6—2.3 m-kg, 12—17 ft-lb)

3. Push the sensor harness through the splash shield and secure it with the clip.
4. Install the sensor harness bracket to the body.

   Tightening torque:
   16—23 N·m (1.6—2.3 m-kg, 12—17 ft-lb)

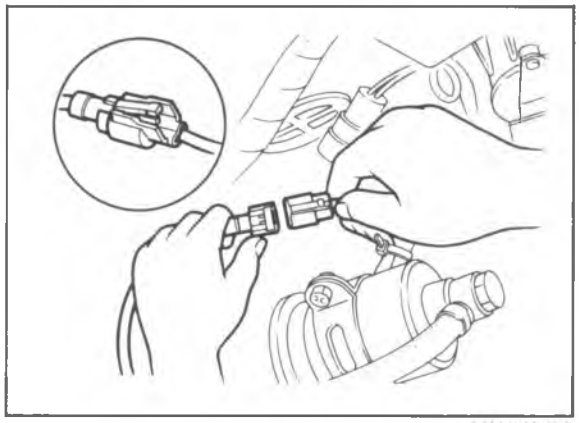

86U11X-172

Caution
Verify that the harness is not twisted, and does not contact the shock absorber or body when the steering wheel is turned.

5. Connect the sensor connector.
6. Install the wheel and tire.

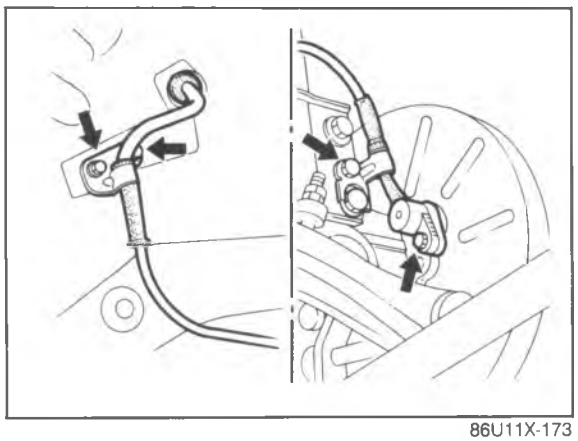

86U11X-173

Removal of Rear Wheel Speed Sensor

1. Remove the wheel and tire.
2. Remove the parts shown in the figure, and remove the sensor from the hub spindle.

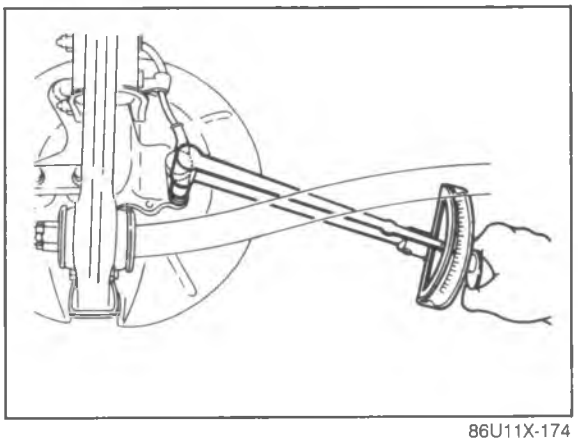

86U11X-174

Installation of Rear Wheel Speed Sensor

1. Install the sensor to the hub spindle.

   Tightening torque:
   16—23 N·m (1.6—2.3 m-kg, 12—17 ft-lb)

   Caution
   The left and right sensors are not interchangeable. L or R is indicated on the bracket.

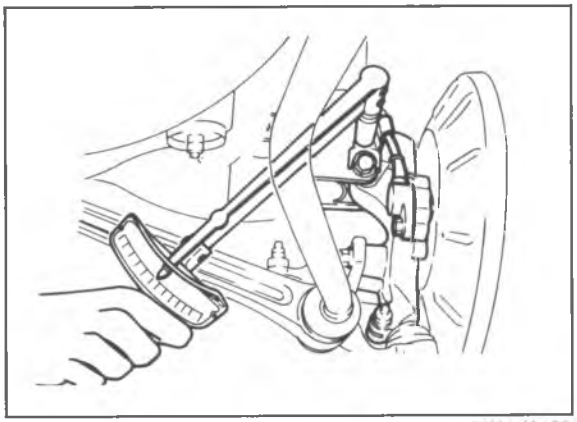

86U11X-175

2. Install the sensor harness bracket onto the knuckle.

   Tightening torque:
   16—23 N·m (1.6—2.3 m-kg, 12—17 ft-lb)

3. Feed the sensor harness through the body and install the grommet.
4. Install the sensor harness bracket to the body.

   Tightening torque:
   11—26 N·m (1.1—2.6 m-kg, 8—19 ft-lb)

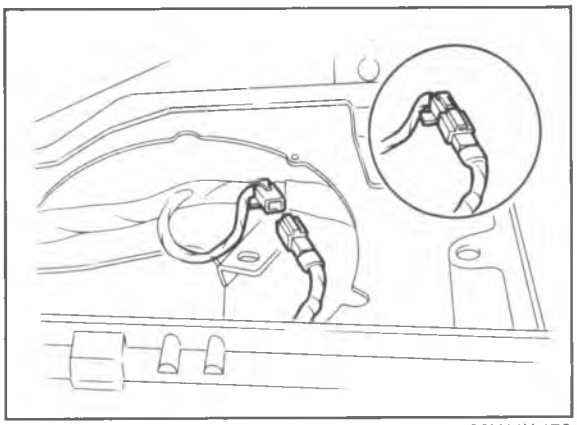

86U11X-176

Caution
Verify that the harness is not twisted, and does not contact the shock absorber or body when the steering wheel is turned.

5. Connect the sensor connector.
6. Install the wheel and tire.

BRAKE LIGHT SWITCH

Refer to page 15—47.

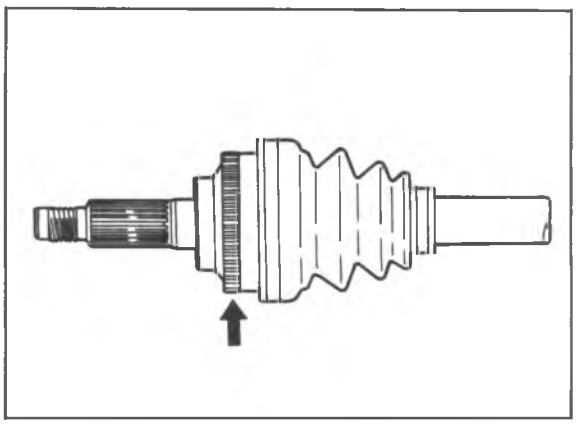

86U11X-177

SENSOR ROTOR

Inspection

Check the sensor rotor for missing or damaged teeth.

Removal of Front Sensor Rotor

1. Loosen the front wheel lug nuts.
2. Block the rear wheels.
3. Jack up the front of the vehicle and support it with safety stands.
4. Remove the wheels.
5. Remove in the sequence shown in the figure, referring to removal note for the specially marked parts.

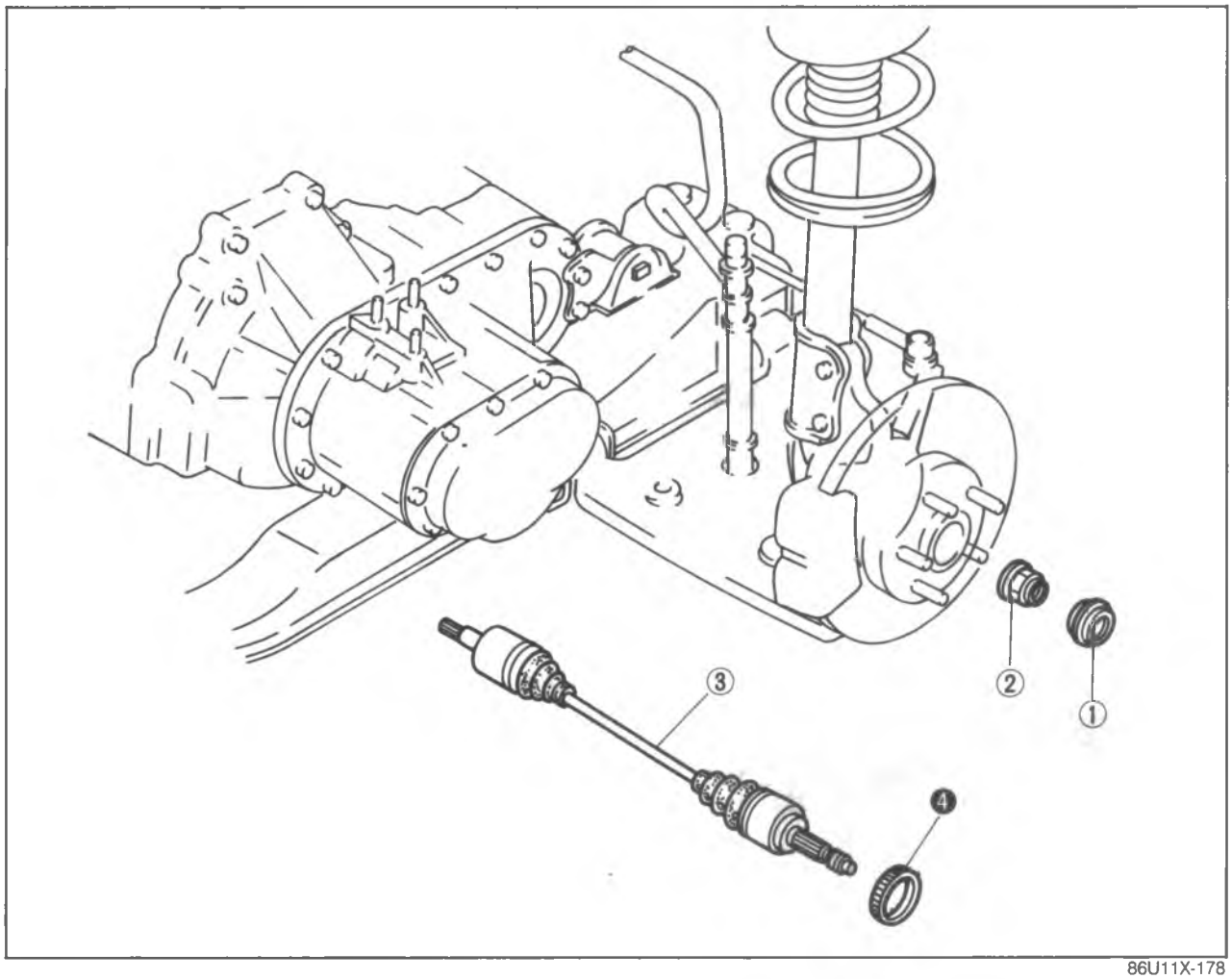

86U11X-178

1. Hub cap
2. Locknut
3. Driveshaft (Refer to section 9)
4. Sensor rotor

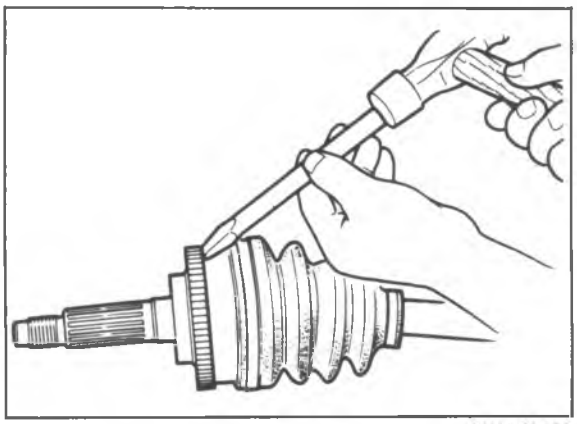

86U11X-179

Removal note
Sensor rotor
Tap the sensor rotor off the drive shaft with a chisel.

Installation of Front Sensor Rotor
Install in the reverse order of removal, referring to installation note for the specially marked parts.

Torque specifications

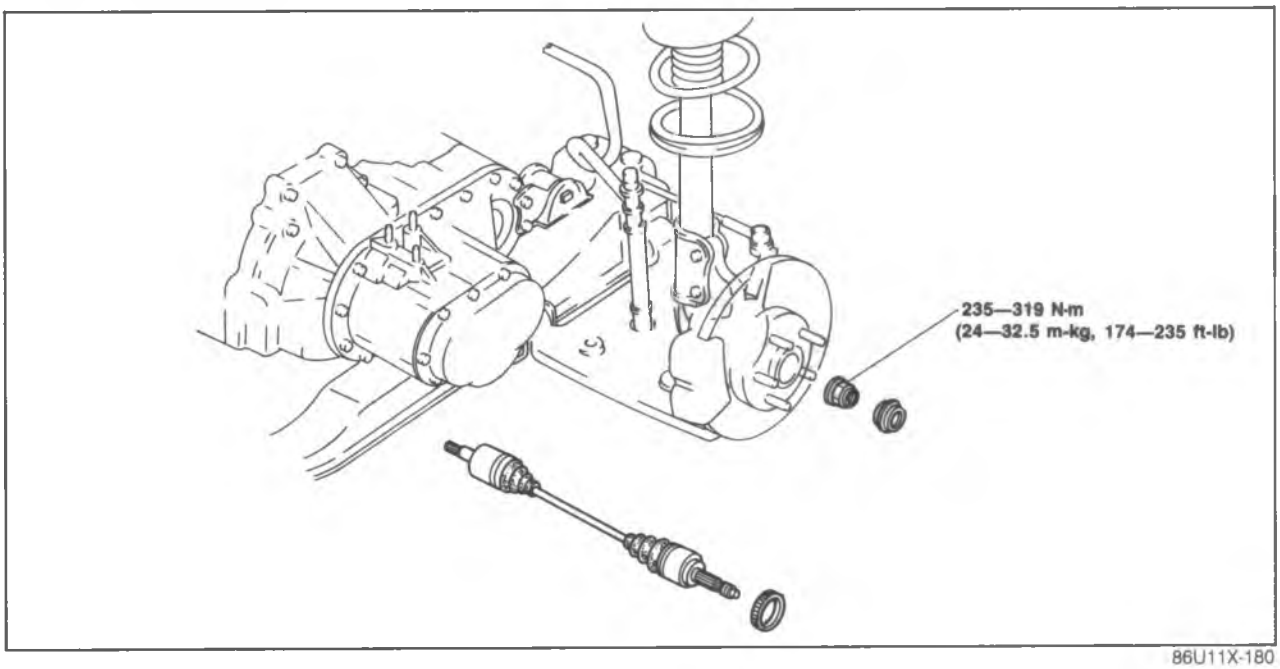

86U11X-180

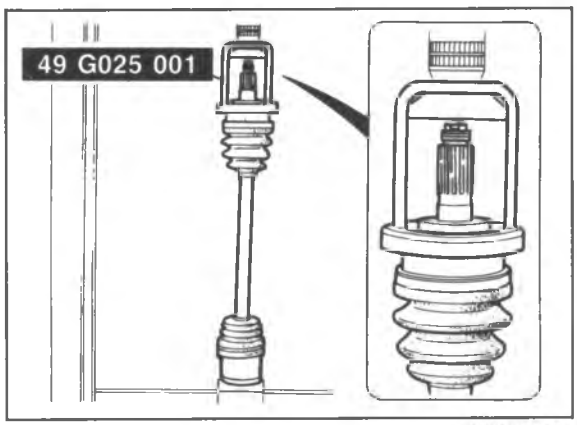

86U11X-181

Installation note
Sensor rotor
Press the sensor rotor onto the driveshaft with the **SST**.

Caution
Install the sensor rotor with chamfered edge toward the driveshaft.

Removal of Rear Sensor Rotor

1. Loosen the rear wheel lug nuts.
2. Block the front wheels.
3. Jack up the rear of the vehicle and support it with safety stands.
4. Remove the wheels.
5. Remove in the sequence shown in the figure, referring to removal note for the specially marked parts.

86U11X-182

1. Hub cap
2. Locknut
3. Caliper assembly and mounting support
4. Disc plate
5. Sensor rotor

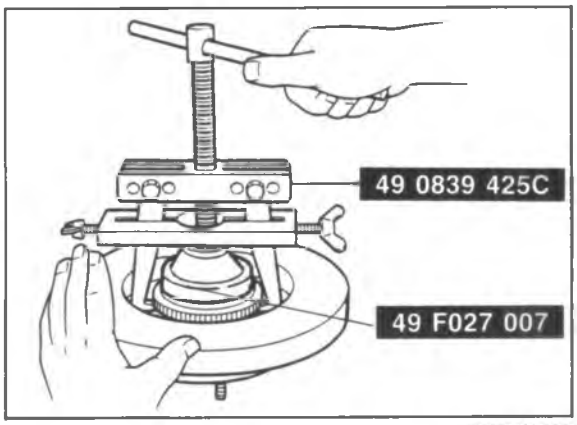

86U11X-183

Removal note

Sensor rotor

Remove the sensor rotor from the hub assembly with the **SST**.

Installation of Rear Sensor Rotor

Install in the reverse order of removal, referring to installation note for the specially marked parts.

Torque specifications

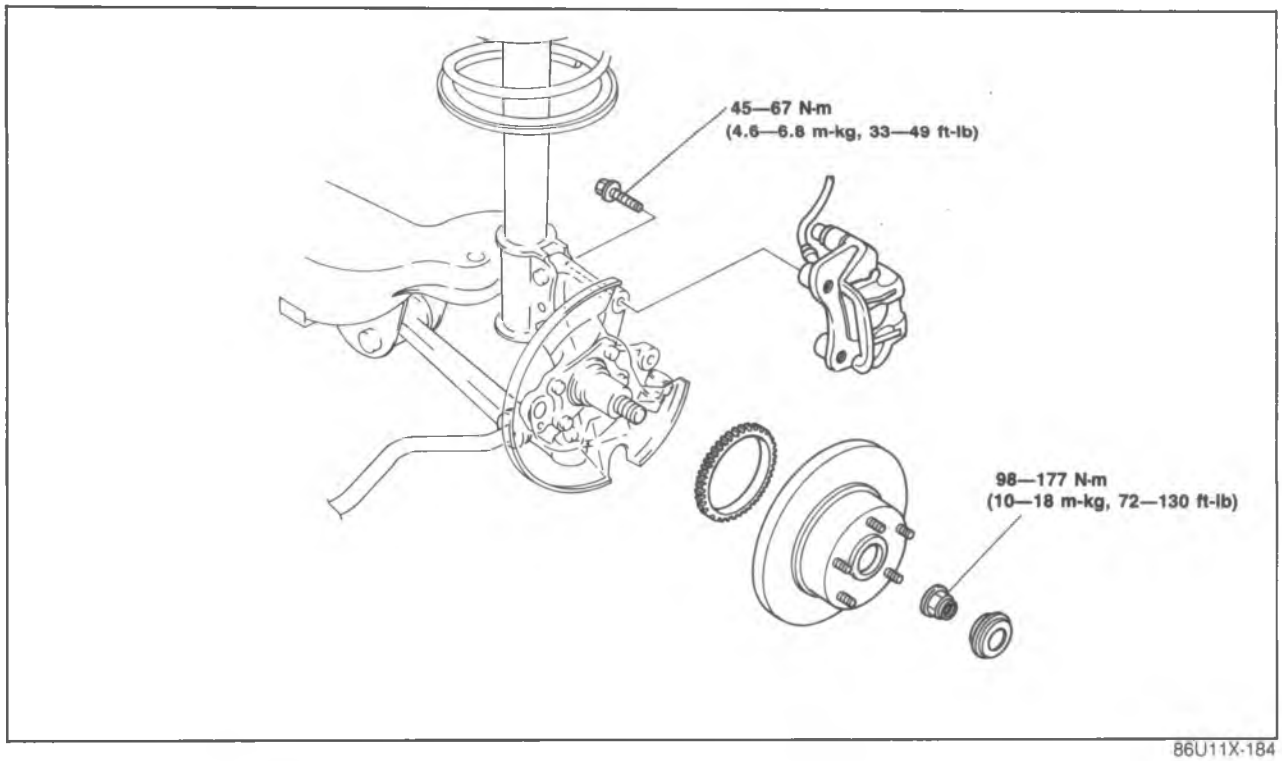

86U11X-184

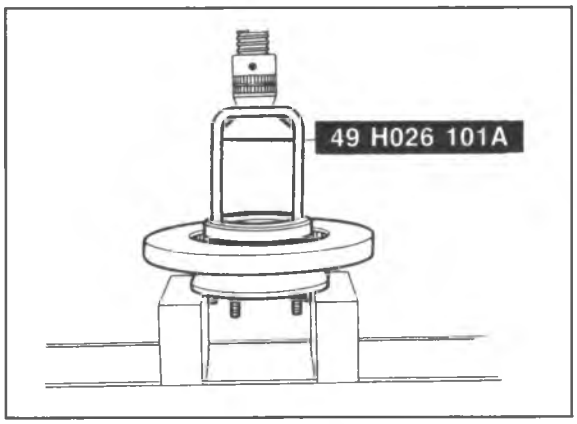

86U11X-185

Installation

Sensor rotor

Press the sensor rotor onto the hub with the **SST**.

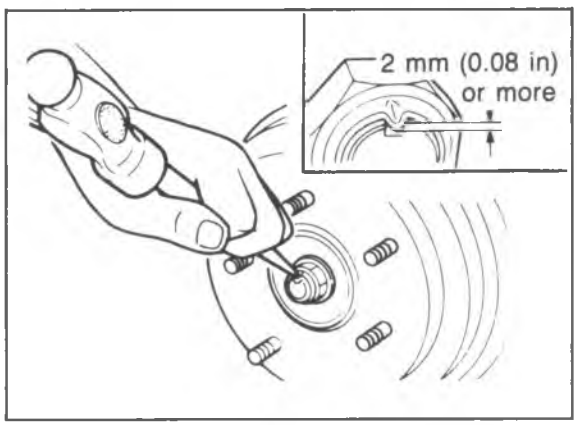

86U11X-186

Locknut

1. Install and tighten the locknut.
2. Stake a new locknut securely in the driveshaft groove.

   Caution
   Do not use a pointed tool for staking.

3. Check that the hub rotates freely by hand.

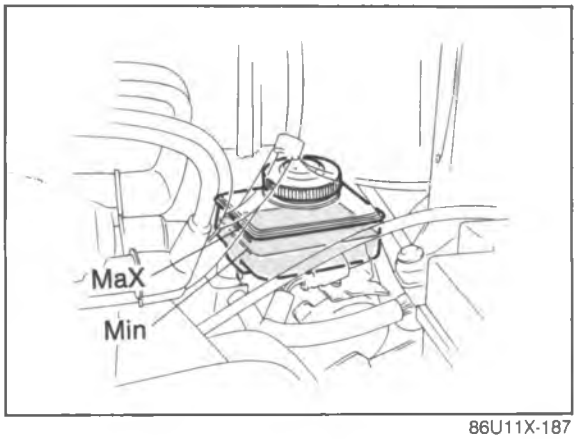

86U11X-187

HYDRAULIC UNIT FLUID

Inspection of Level

1. Run the engine for 10 seconds to let the pump motor build pressure in the accumulator; then stop the engine.
2. Check that the fluid level is between the Max and Min lines of the reservoir.
3. If the level is lower than the Min line and leakage from cap is not found, replace the hydraulic unit assembly.

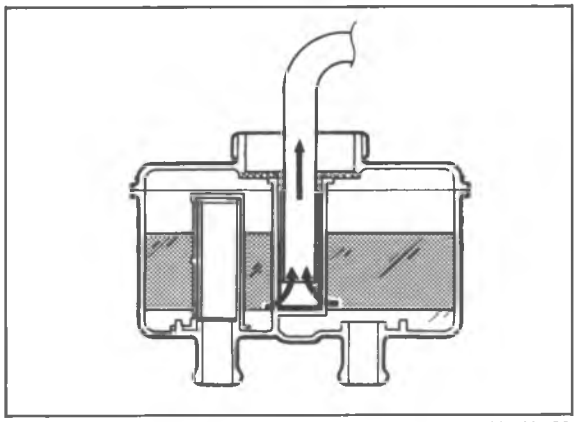
86U11X-188

Replacement

1. Remove the reservoir cap and retainer.
2. Use a suction pump and a soft vinyl hose to suck fluid from the reservoir.

Caution

a) A hard hose may damage the filter in the reservoir.

b) Only the amount of fluid shown can be removed from the reservoir.

3. Fill the reservoir with the specified type and amount of brake fluid.

Caution

a) Do not let any foreign material into the reservoir.

b) Do not soak the upper filter with brake fluid. Otherwise pouring fluid into may be difficult.

Fluid: FMVSS 116, DOT-3 or DOT-4 or SAE J1703a

4. Check the fluid level as discribed above.

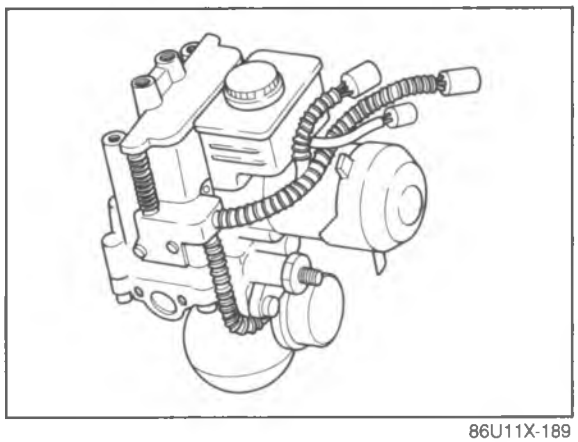
86U11X-189

HYDRAULIC UNIT

Warning

The accumulator contains high-pressure gas, do not attempt to disassemble it or subject it to hard shocks or high heat.

When the hydraulic unit is scrapped, the high-pressure gas must be released. Turn the screw on bottom accumlator one full turn only, and allow the gas to escape gradually.

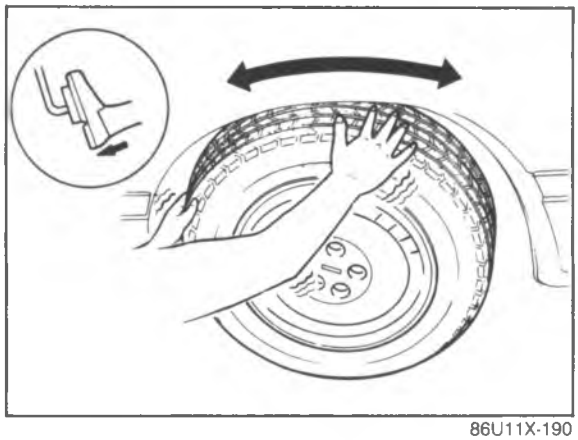

86U11X-190

Inspection of Pressure Reduction

1. Check that the battery is fully charged.
2. Jack up the vehicle and support it with safety stands.
3. Release the parking brake.
4. Check the wheel for brake drag while turning it by hand.

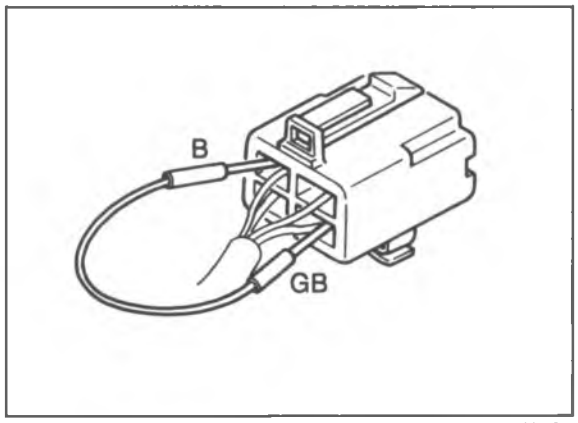

86U11X-191

5. Connect terminal wires (GB) and (B) of the check connector with a jumper wire.
6. Have an assistant depress the brake pedal; then verify that the wheel can not be turned.
7. Run the engine for 10 sec, and stop it.

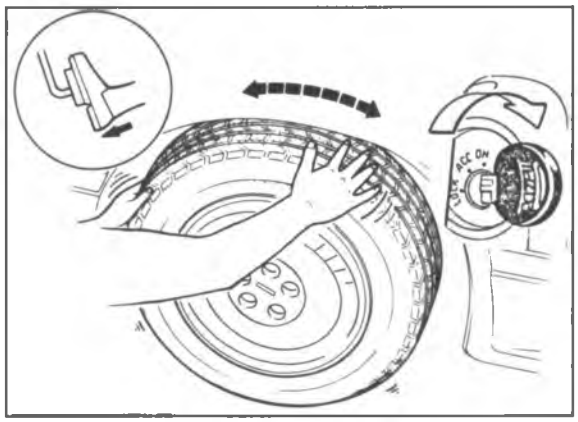

86U11X-192

8. With the brake pedal depressed, turn the ignition switch ON.
9. With the brake pedal still depressed, check that the wheel can be turned intermittently (when pressure-reduction is operating).

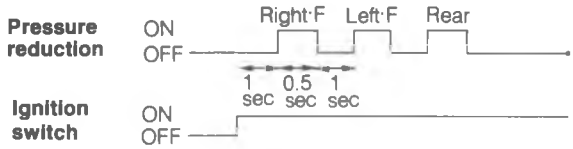

10. Check operation at the remaining wheels.
11. If not operated correctly, check the warning light a brake light switch circuit for proper operation.

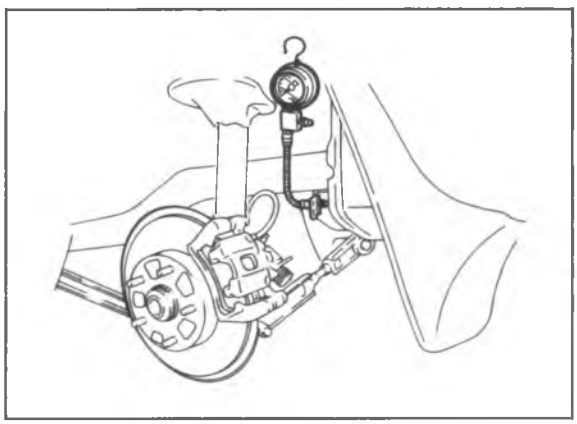

86U11X-193

Inspection of Proportioning Valve

Note
The proportioning valve is built into the hydraulic unit.

1. Disconnect the flexible hose from the brake pipe, then connect one pressure gauge to the front brake pipe, the other to the rear brake pipe.

Note
Use a pressure gauge [9,810 kPa (100 kg/cm^2, 1,422 psi)].

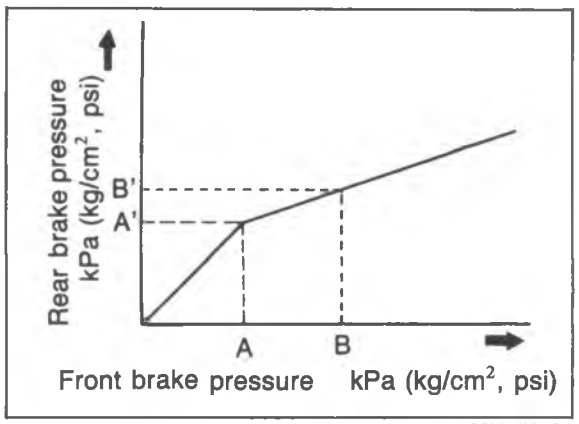

86U11X-194

2. Bleed air from the system.
3. Depress the brake pedal, and compare the fluid pressure of the front brake with that of the rear brake.

Fluid pressure **kPa (kg/cm², psi)**

Front brake side		Rear brake side	
A	2,943 (30,427)	A'	2,747—3,139 (28—32, 398—455)
B	6,867 (70,995)	B'	3,924—4,316 (40—44, 569—626)

4. If the measurement is not within specification replace the hydraulic unit assembly.

REMOVAL

Caution

a) Brake fluid will damage painted surfaces. If it does get on the painted surfaces, wipe it off immediately.

b) Do not tip the hydraulic unit to prevent the brake fluid in the reservoir from draining.

1. Remove the nuts mounting the fuel filter and ignitor to the bracket and move them toward the engine.
2. Remove the air cleaner assembly.
3. Remove the master cylinder (Refer to page 11—13.)
4. Remove the hydraulic unit in the sequence shown in the figure.

86U11X-195

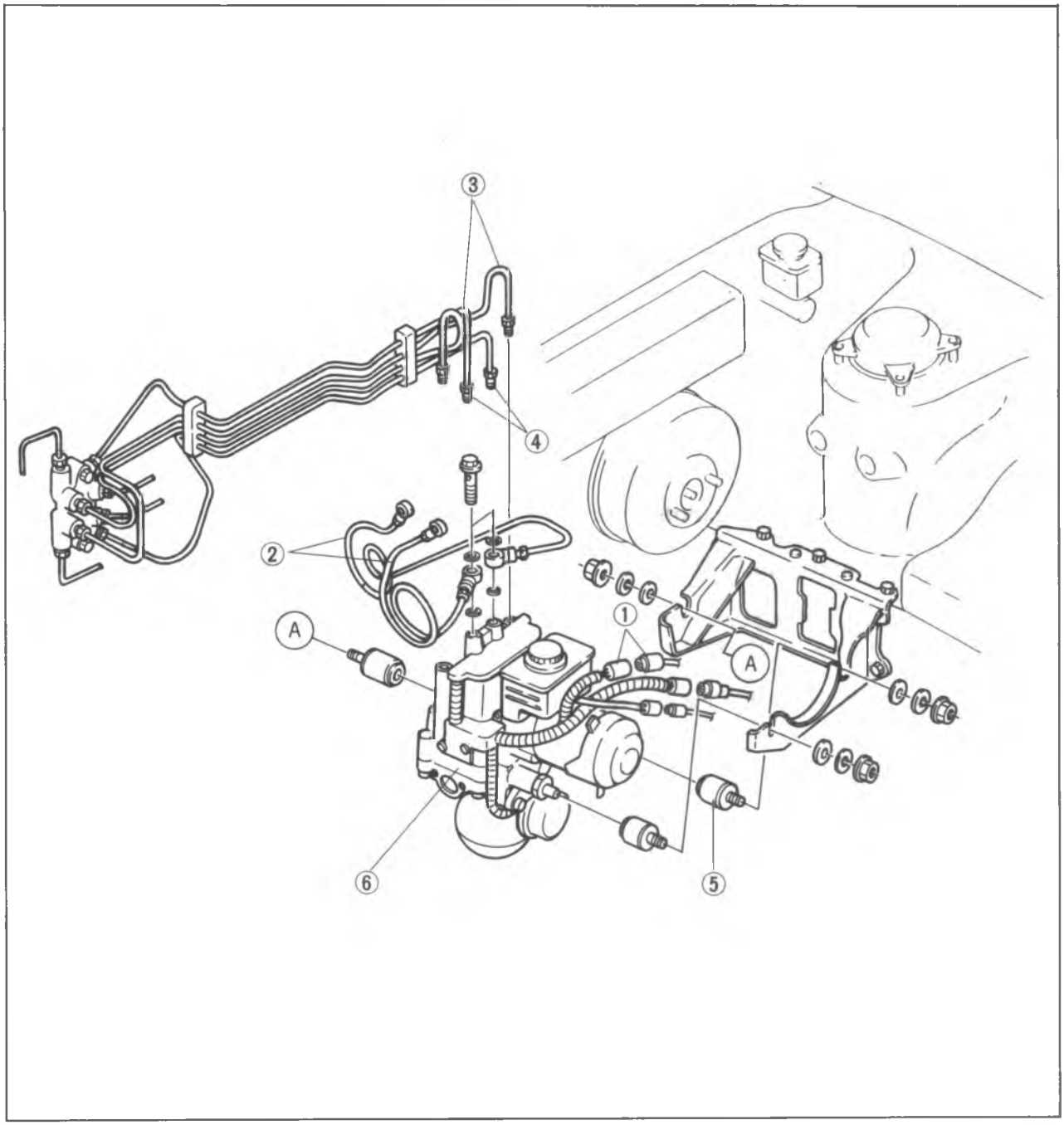

86U11X-196

1. Coupler
2. Brake pipe (from master cylinder)
3. Brake pipe (to front brakes)
4. Brake pipe (to rear brakes)
5. Mount bushing
6. Hydraulic unit

INSTALLATION

1. Install in the reverse order of removal.
   Before installing the air cleaner assembly, igniter, and fuel filter:
   (1) Add brake fluid and bleed air (Refer to page 11—8)
   (2) Check each part for fluid leakage
   (3) Check the brake fluid level of both the master cylinder reservoir and hydraulic unit reservoir.

2. Tighten all bolts and nuts to the specified torque, referring to torque specifications.
3. After installation:
   (1) The sealing reservoir cap (red) is installed on the new hydraulic unit to prevent the brake fluid from leaking while shipping. Replace it with an original cap (black) after replacing the hydraulic unit.
   (2) Check that the hydraulic unit operates properly by testing the pressure reduction. (Refer to page 11—84.)

Torque specifications

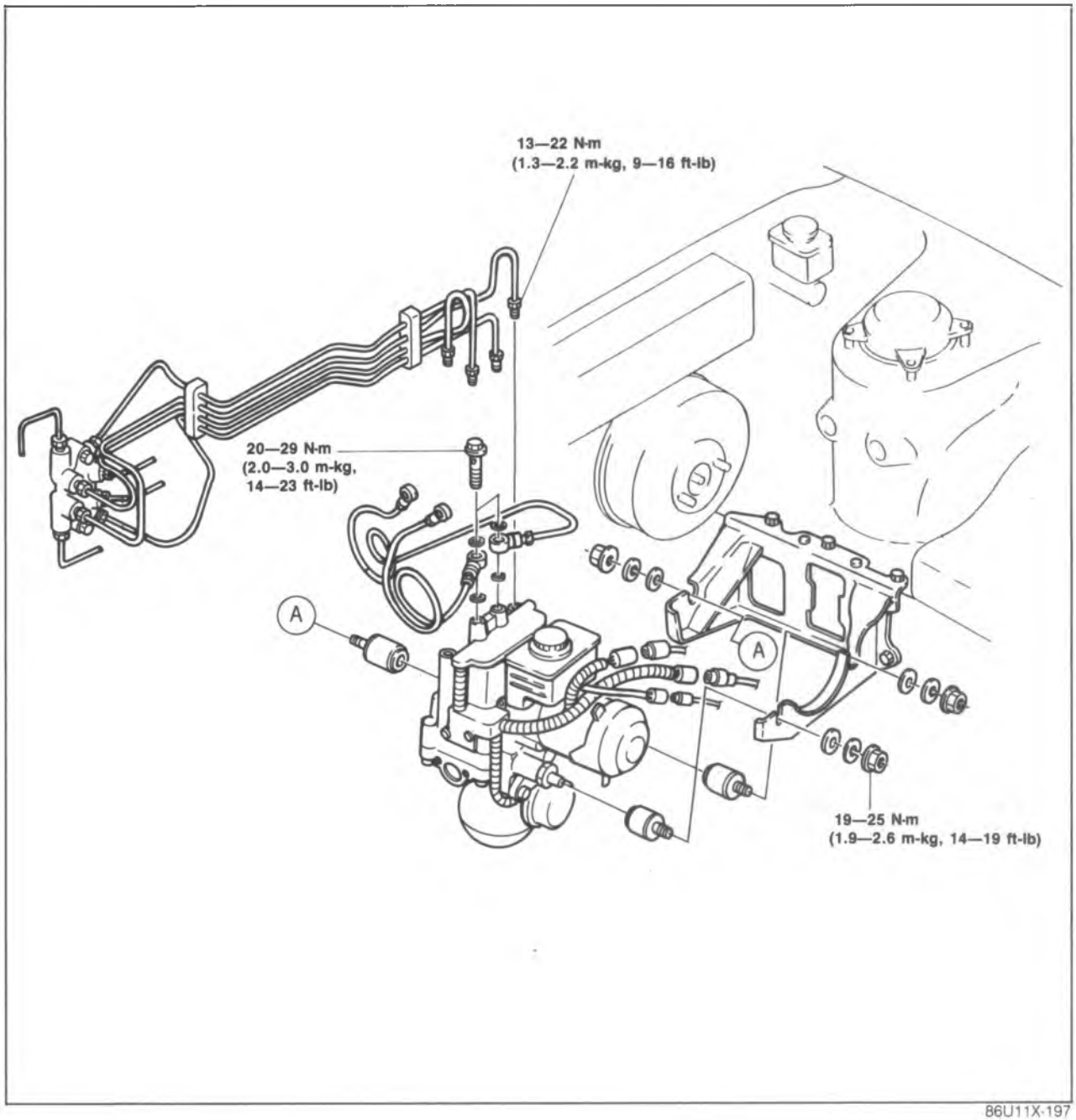

86U11X-197

CONTROL UNIT CIRCUIT

Inspection of Control Unit Circuit

1. Start the engine, and run it for 10 seconds.
2. Disconnect the connectors from the control unit. Check the connector at the harness side as shown in the table below.

Terminal		Connection or measured item		Check item	Tester connection	Condition	Voltage or resistance
Q-01 11-pins	2A (W), 2B (R)	Wheel speed sensor	Left front	Voltage (AC)	2A (W) — 2B (R)	Turn wheel 1 revolution per second	More than 0.25V (AC)
				Resistance		—	800—1,200Ω
	2C (Y), 2D (O)		Right front	Voltage (AC)	2C (Y) — 2D (O)	Turn wheel 1 revolution per second	More than 0.25V (AC)
				Resistance		—	800—1,200Ω
	2E (YG), 2F (YL)		Left rear	Voltage (AC)	2E (YG) — 2F (YL)	Turn wheel 1 revolution per second	More than 0.25V (AC)
				Resistance		—	800—1,200Ω
	2H (G), 2J (L)		Right rear	Voltage (AC)	2H (G) — 2J (GR)	Turn wheel 1 revolution per second	More than 0.25V (AC)
				Resistance		—	800—1,200Ω
	2I (GR)	Low pressure switch		Continuity	2I (GR) — Ground	—	Continuity
	2K (LB)	High pressure switch		Continuity	2K (LB) — Ground	—	Continuity
	2L (WB)	Alternator output		Voltage	2L (WB) — Ground	Run engine	Approx. 14V
Q-01 17-pins	A (WG)	Brake light switch		Voltage	A (WG) — Ground	Depress brake pedal	12V
	B (RY)	Motor		Continuity	B (RY) — Ground	—	Continuity
	C (LO)	Motor relay		Resistance	C (Lo)(⊕ test-lead)-J	—	Approx. 60—70Ω
	D (GR)	Check connector		Continuity	D (GR) — A (GR, Q-07)	—	Continuity
	E (BL)	Fail-safe relay		Resistance	E (BL) — G (BG)	—	Approx. 70—80Ω
	F (LY)	Warning light		Continuity	F (LY) — Ground	—	Continuity
	G (BG)	Battery		Voltage	G (BG) — Ground	Turn ignition SW ON	12V
	H (GB)	Check connector		Continuity	H (GB) — B (GB, Q-07)	—	Continuity
	J (YG)	Solenoid valve		Resistance	J(YG) — K (Br)	—	Approx. 5.5—7.0Ω
	K (Br)						
	M (YR)	Solenoid valve			M (YR) — O (BW)		
	O (BW)						
	Q (YW)	Solenoid valve			Q (YW) — R (L)		
	R (L)						
	L (B)	Ground circuit		Continuity	L (B) — Ground	—	Continuity
	N (B)				N (B) — Ground		
	P (B)				P (B) — Ground		
4-pins	C (B)				C (B,Q-07) — Ground		

Control Unit Connector

View from harness side

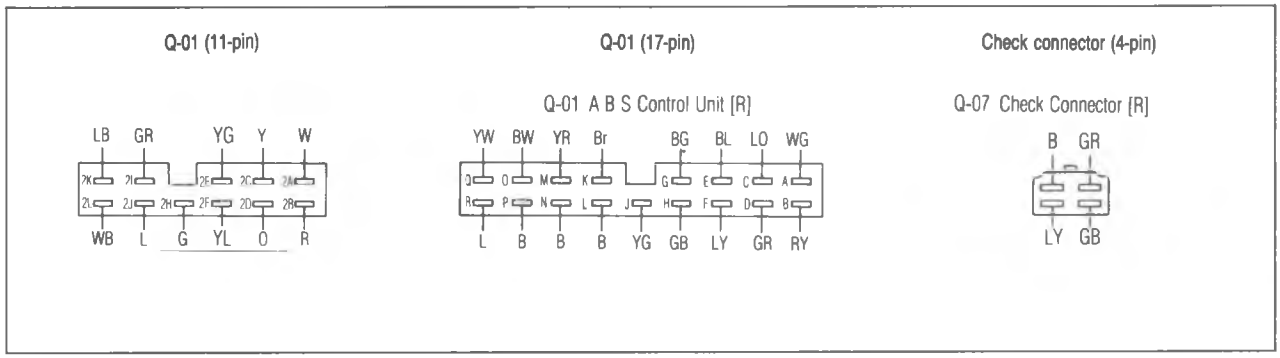

86U11X-199

WHEELS AND TIRES

OUTLINE ..... **12— 2**
SPECIFICATIONS ..... **12— 2**
TROUBLESHOOTING GUIDE ..... **12— 2**
WHEELS AND TIRES ..... **12— 3**
INSPECTION AND ADJUSTMENT ..... **12— 3**
TIRE ROTATION ..... **12— 4**
WHEEL BALANCE ..... **12— 5**
WHEEL MOUNTING ..... **12— 5**
SPECIAL NOTE ..... **12— 5**

86U12X-001

OUTLINE

SPECIFICATIONS

Item \ Type			Standard	Temporary spare
Wheels	Size		5 1/2-JJ x 14 *6-JJ x 15	4-T x 15
	Offset mm (in)		42 (1.65)	53 (2.09)
	Diameter of pitch circle mm (in)		114.3 (4.5)	
	Material		Steel or aluminum alloy	Steel
Tires	Size		P185/70R14 P195/60HR15 P195/60R15 87H	T125/70D15
	Air pressure kPa (kgf/cm^2, psi)	Front	216 (2.2, 32)	412 (4.2, 60)
		Rear	177 (1.8, 26)	

86U12X-002

*6JJ x 15 wheel includes optional unidirectional wheel

TROUBLESHOOTING GUIDE

Problem	Possible Cause	Remedy	Page
Excessive or irregular tire wear	Refer to page 12— 3 for details.		
Premature tire wear	Incorrect tire pressure	Adjust	12— 2
Tire squeal	Incorrect tire pressure Tire deterioration	Adjust Replace	12— 2 —
Road noise or body vibration	Insufficient tire pressure Unbalanced wheel(s) Deformed wheel(s) or tire(s) Irregular tire wear	Adjust Adjust Repair or replace Replace	12— 2 12— 5 — —
Steering wheel vibration	Irregular tire wear Right and left tread depths different Deformed or unbalanced wheel(s) Deformed tire(s) Unequal tire pressures Loose lug nuts	Replace Replace Replace or adjust Replace Adjust Tighten	— — 12— 5 — 12— 2 12— 5
Uneven (one-sided) braking	Unequal tire pressures	Adjust	12— 2
Steering wheel doesn't return properly, or pulls to either left or right while vehicle moving on level road surface	Incorrect tire pressure Irregular tire wear (left and right are different) Unequal tire pressures Different types or brands of tires mixed (right/left) Improperly tightened lug nuts	Adjust Replace Adjust Replace Tighten	12— 2 — 12— 2 — 12— 5
General driving instability	Unequal tire pressures Deformed or unbalanced wheel(s) Loose lug nuts	Adjust Replace or adjust Tighten	12— 2 12— 5 12— 5
Excessive steering wheel play	Loose lug nuts	Tighten	12— 5

86U12X-003

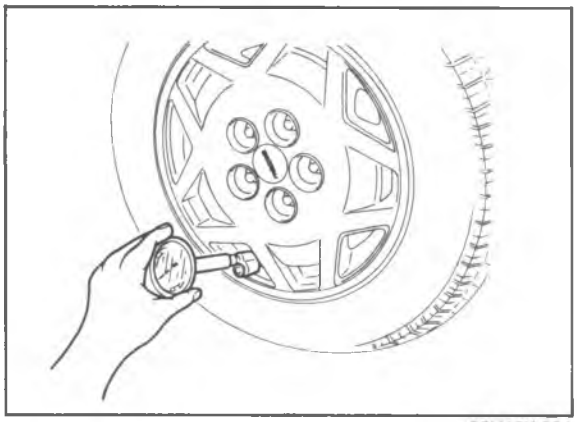

86U12X-004

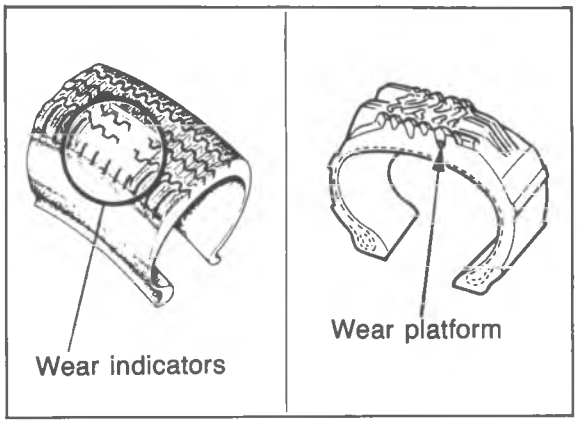

86U12X-005

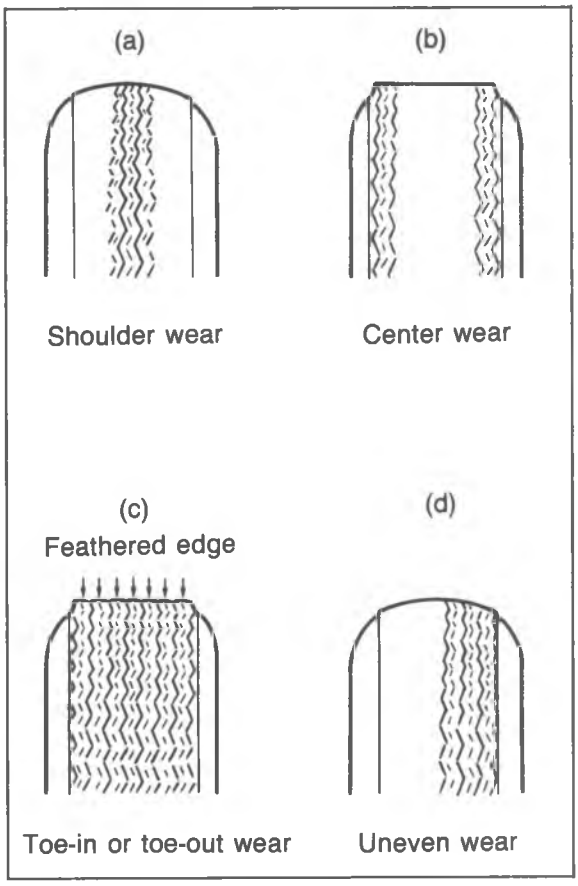

86U12X-006

WHEELS AND TIRES

INSPECTION AND ADJUSTMENTS

Check the following, and adjust or replace as necessary.

1. Air pressure
   Check the air pressure of all tires, including the spare tire, with an air pressure gauge.
   (Refer to page 12—2.)

   Caution
   The air pressure must be measured when the tire is cold.

2. Tire wear

Specifications

Remaining tread

Ordinary tires: 1.6 mm (0.063 in) min.
(Tire should be replaced if wear indicators are exposed.)

Snow tires: 50% of tread
(Tire should be replaced if wear indicators are exposed.)

Troubleshooting guide

Abnormal tire wear patterns shown in the illustration can occur. Refer to the chart for the probable causes and remedies.

	Probable cause	Remedy
(a)	• Underinflation (both sides worn) • Incorrect camber (one side wear) • Hard cornering • Lack of rotation	• Measure and adjust pressure • Repair, or replace axle and suspension parts • Reduce speed • Rotate tires
(b)	• Overinflation • Lack of rotation	• Measure and adjust pressure • Rotate tires
(c)	• Incorrect toe-in	• Adjust toe-in
(d)	• Incorrect camber or caster • Malfunctioning suspension • Unbalanced wheel • Out-of-round brake drum or disc • Other mechanical conditions • Lack of rotation	• Repair, or replace axle and suspension parts • Repair or replace • Balance or replace • Correct or replace • Correct or replace • Rotate tires

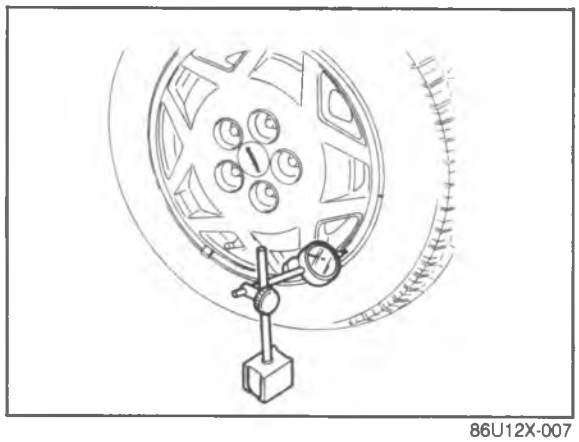

86U12X-007

3. Wheel deflection
   Set the probe of a dial indicator against the wheel, and turn the wheel one full revolution.

Wheel deflection limit mm (in)

	Horizontal	Vertical
Steel wheel	2.5 (0.098)	2.0 (0.079)
Aluminum wheel	2.0 (0.079)	

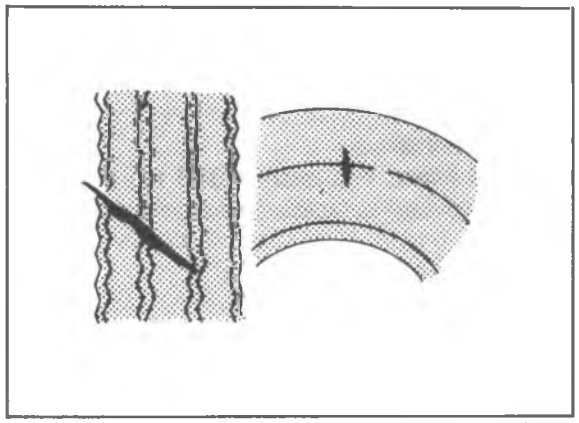

86U12X-008

4. Cracks, damage, or foreign matter (such as metal pieces, nails, and stones) in the tire and cracks, deformation, and damage to the wheel
5. Loose wheel lug nut(s)
6. Air leaking from the valve stem

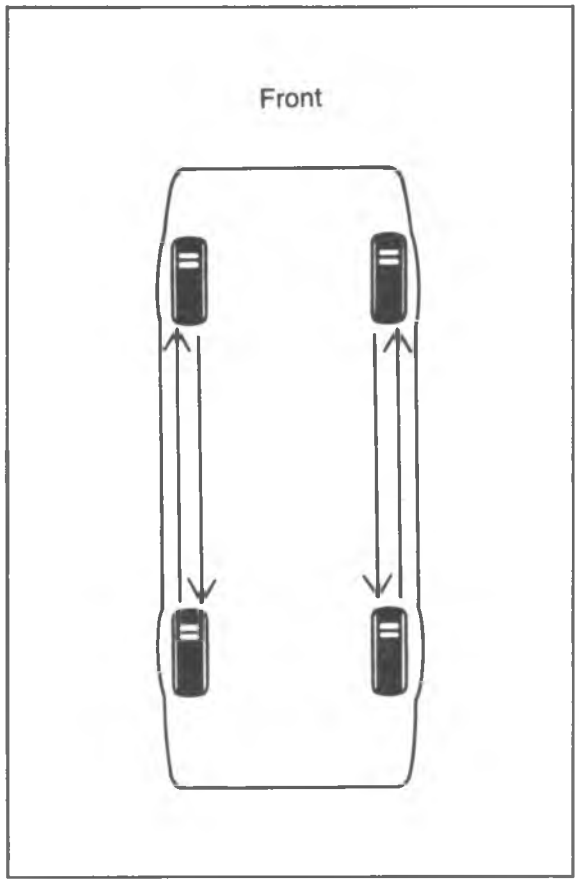

86U12X-009

TIRE ROTATION

To prolong tire life and assure uniform wear, rotate the tires every 6,000 km (3,750 miles) or sooner if irregular wear develops.

Caution

a) Do not include "TEMPORARY USE ONLY" spare tire in rotation.

b) After rotating the tires, adjust each tire to the specified air pressure (Refer to page 12—2.)

Note

The optional unidirectional wheels are marked to indicate direction of travel.

Unidirectional wheel

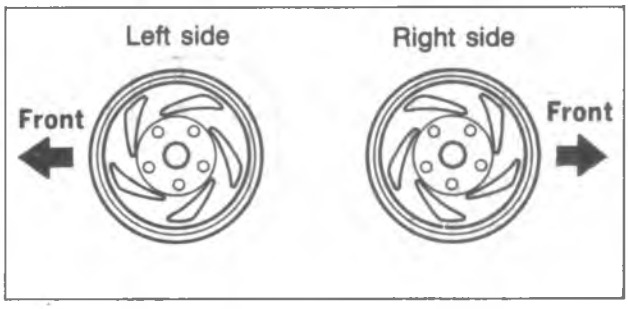

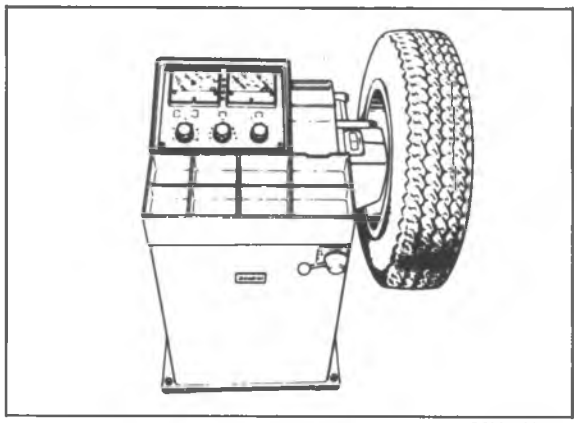

86U12X-010

WHEEL BALANCE

If a wheel becomes unbalanced or if a tire is replaced or repaired, the wheel must once again be balanced to within specification.

Maximum unbalance (at rim edge): g (oz)

14 inch-wheel	10 (0.35)
15 inch-wheel	9 (0.32)

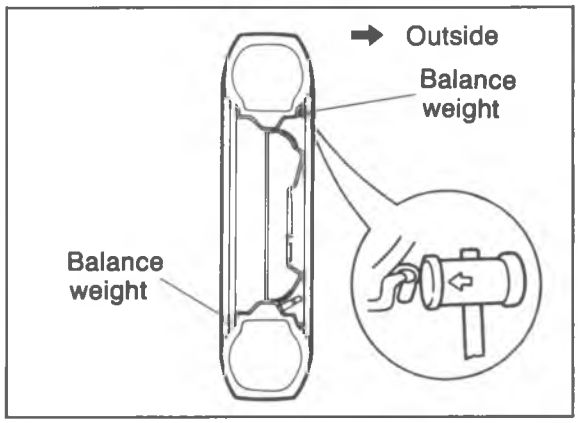

86U12X-011

Caution

a) Do not use more than two balance weights on the inner or outer side of the wheel. if the total weight exceeds 100 g (3.5 oz), re-balance after moving the tire around on the rim.

b) Attach the balance weights tightly so that they do not protrude more than 3 mm (0.12 in) beyond the wheel edge.

c) Select suitable balance weights for steel or aluminum alloy wheels.

d) Do not use an on-car balancer on ATX models. Use of this type of balancer may cause clutch damage.

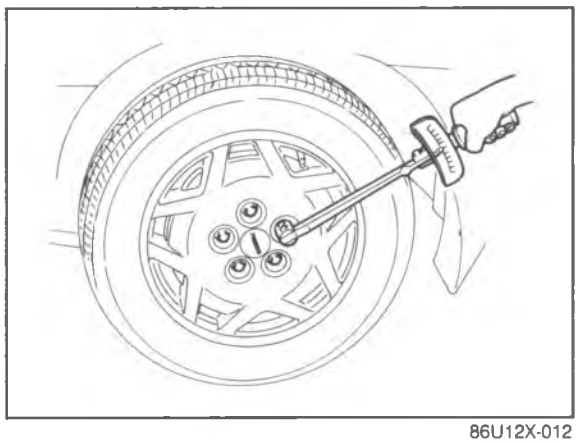

86U12X-012

WHEEL MOUNTING

Tighten the lug nuts to the specified torque in a criss-cross fashion.

Tightening torque:
88—118 N·m (9—12 m-kg, 65—87 ft-lb)

Caution

a) The wheel-to-hub contact surfaces must be clean.

b) Never apply oil to the nuts, bolts, or wheels; doing so might cause looseness or seizure of the lug nuts.

SPECIAL NOTE

Regarding wheels and tires:

1. Do not use wheels or tires other than the specified types.
2. Aluminum wheels are easily scratched. When washing them, use a soft cloth, never a wire brush. If the vehicle is steam cleaned, do not allow boiling water to contact the wheels.
3. If alkaline compounds (such as salt water or road salts), get on aluminum wheels, wash them as soon as possible to prevent damage. Use only a neutral detergent.

86U12X-013

Regarding tire replacement:

Note the following points when tires are to be removed from or mounted onto the wheels.

1. Be careful not to scratch the tire bead, the rim bead, or the edge of the rim.
2. Apply a soapy solution to the tire bead and the edge of the rim.
3. Use a wire brush, sandpaper, or a cloth to clean and remove all rust, dirt, etc., from the rim edge and the rim bead. For aluminum wheels, use only a cloth for this purpose; never use a wire brush or sandpaper.
4. Remove any pebbles, glass, nails, etc., embedded in the tire tread.
5. Be sure the air valve is installed correctly.
6. After mounting a tire onto a wheel, inflate the tire to 250—300 kPa (2.55—3.06 kg/cm^2, 35.55—42.66 psi). Check to be sure that the bead is seated correctly onto the rim, and that there are no air leaks. Then reduce the pressure to the specified level.
7. If a tire iron is used to change a tire on an aluminum wheel, be sure to use a piece of rubber between the iron lever and the wheel in order to avoid damage to the wheel. Work should be done on a rubber mat, not on a hard or rough surface.

86U12X-014

SUSPENSION

OUTLINE ..... 13— 2
STRUCTURAL VIEW ..... 13— 2
SPECIFICATIONS ..... 13— 4
TROUBLESHOOTING GUIDE ..... 13— 7
FRONT SHOCK ABSORBER AND SPRING ..... 13— 9
REMOVAL AND INSTALLATION ..... 13— 9
DISASSEMBLY AND ASSEMBLY ..... 13—11
FRONT LOWER ARM ..... 13—14
REMOVAL AND INSTALLATION ..... 13—14
FRONT STABILIZER (4WS) ..... 13—19
REMOVAL AND INSTALLATION ..... 13—19
FRONT STABILIZER ..... 13—23
REMOVAL AND INSTALLATION ..... 13—23
REAR SHOCK ABSORBER AND SPRING .. 13—25
REMOVAL AND INSTALLATION ..... 13—25
DISASSEMBLY AND ASSEMBLY ..... 13—28
LATERAL LINK AND TRAILING LINK ..... 13—30
REMOVAL AND INSTALLATION ..... 13—30
REAR LOWER ARM AND TRAILING LINK (4WS) ..... 13—32
REMOVAL AND INSTALLATION ..... 13—32
REAR STABILIZER ..... 13—35
REMOVAL AND INSTALLATION ..... 13—35
REAR STABILIZER AND CONTROL LINK (4WS) ..... 13—37
REMOVAL AND INSTALLATION ..... 13—37
REAR CROSSMEMBER (4WS) ..... 13—40
REMOVAL AND INSTALLATION ..... 13—40
FRONT WHEEL ALIGNMENT ..... 13—46
REAR WHEEL ALIGNMENT ..... 13—48

86U13X-001

OUTLINE

STRUCTURAL VIEW
Front Suspension

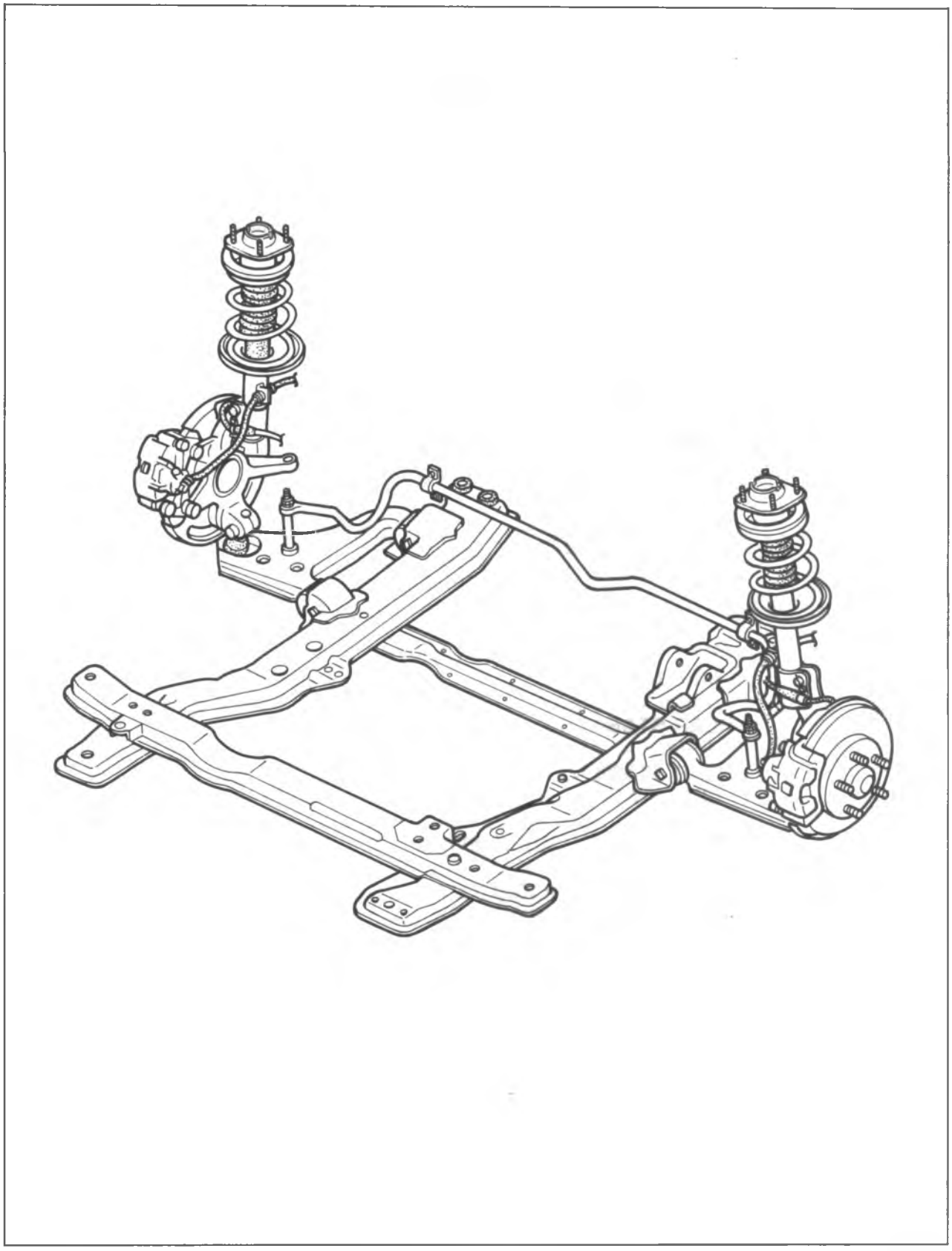

86U13X-002

Rear Suspension

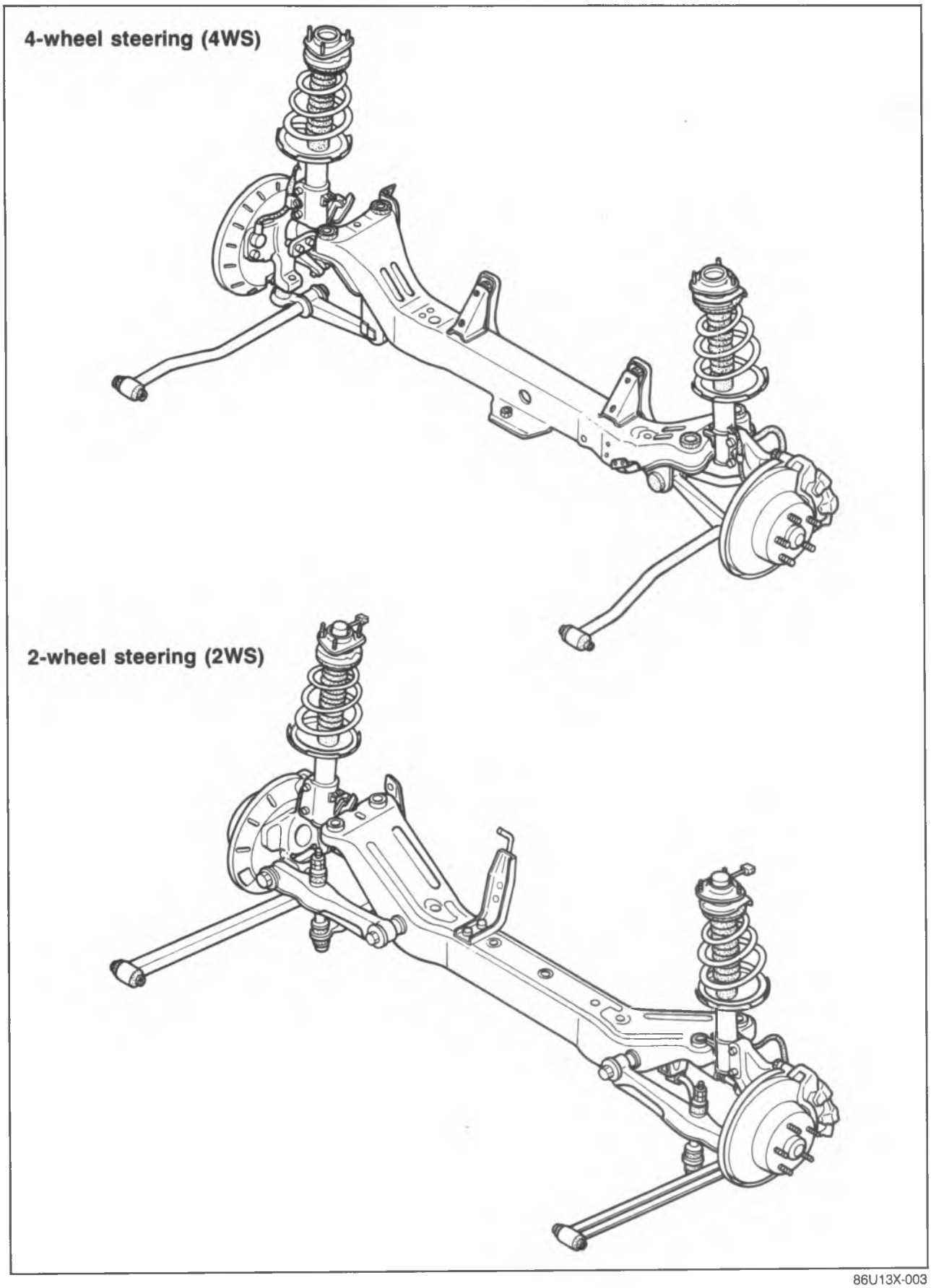

86U13X-003

SPECIFICATIONS
Front Suspension

Item		Specifications					
Suspension type		Strut					
Front wheel alignment	Toe-in mm (in)	3 ± 3 (0.12 ± 0.12)					
	Camber angle	0°17' ± 45'					
	Caster angle	1°13' ± 45'					
	King pin angle	12°47'					
Maximum front steering angle	Inner	36°00' ± 2° F2 T/C EC-AT: 34°00' ± 2°					
	Outer	31°00' ± 2° F2 T/C EC-AT: 29°00' ± 2°					
Stabilizer	Type	Torsion bar					
	Diameter mm (in)	20.0 (0.79)					
Shock absorbers	Standard Suspension	Oil type					
	Auto Adjust Suspension	Low-pressure gas sealed type					
*Coil springs	Identification color	Pink	Brown	Purple	Gray	Blue	Red
	Wire diameter mm (in)	12.9 (0.51)	13.1 (0.52)	13.3 (0.53)	13.6 (0.54)	13.7 (0.54)	14.2 (0.56)
	Coil inner diameter mm (in)	147.5 (5.8)					
	Free length mm (in)	370 (14.6)	372 (14.6)	365 (14.4)	350 (13.8)	358 (14.1)	340 (13.4)
	Coil number	5.42	5.53	5.46	5.34	5.45	5.28

Rear Suspension

Item			Specifications						
Suspension type			Strut						
Rear wheel alignment	Toe-in mm (in)	2WS	0 ± 3 (0 ± 0.12)						
		4WS	3 ± 3 (0.12 ± 0.12)						
	Camber angle	2WS	– 0°30' ± 45'						
		4WS	0°00' ± 45'						
Maximum rear steering angle (4WS)	Inner		5°00' ± 45'						
	Outer		5°00' ± 45'						
Stabilizer	Type		Torsion bar						
	Diameter mm (in)		16 (0.63)						
Shock absorbers	Standard suspension		Oil type						
	Auto adjust suspension		Low-pressure gas sealed type						
*Coil springs	Identification color		White	Yellow	Brown	Blue	Green	Red	Pink
	Wire diameter mm (in)		11.7 (0.46)	11.8 (0.46)	11.9 (0.47)	12.1 (0.48)	12.2 (0.48)	12.4 (0.49)	12.6 (0.50)
	Coil inner diameter mm (in)		127.5 (5.0)						
	Free length mm (in)		306 (12.0)	314 (12.4)	323 (12.7)	327 (12.9)	332 (13.1)	336 (13.2)	340 (13.4)
	Coil number		5.58	5.72	5.87	6.03	6.04	6.21	6.36

*Refer to pages 13—5, 6 for coil spring applications.

86U13X-004

Front Coil Springs

Model	Engine	Transaxle	Sunroof	AAS	Identification color					
					Pink	Brown	Purple	Gray	Blue	Red
MX-6	F2 NON-TURBO	M-5	—	○	○					
			—	—	○					
			○	○		○				
			○	—			○			
		EC-AT	—	○			○			
			—	—					○	
			○	○				○		
			○	—					○	
	F2 TURBO	M-5	—	○			○			
			○	○			○			
		EC-AT	—	○					○	
			○	○					○	
Sedan	F2 NON-TURBO	M-5	—	○	○					
			—	—		○				
			○	○	○					
			○	—			○			
		EC-AT	—	○			○			
			—	—					○	
			○	○				○		
			○	—					○	
	F2 TURBO	M-5	—	○			○			
			○	○			○			
		EC-AT	—	○					○	
			○	○					○	
			—	—						○(4WS)
Touring sedan	F2 NON-TURBO	M-5	—	○	○					
			—	—			○			
			○	○	○					
			○	—			○			
		EC-AT	—	○				○		
			—	—					○	
			○	○				○		
			○	—					○	
	F2 TURBO	M-5	—	○			○			
			○	○			○			
		EC-AT	—	○					○	
			○	○					○	

86U13X-005

○.....Available
—.....Not available

M-5.....Manual transaxle
EC-AT.....Electronically controlled automatic transaxle

4WS.....4-wheel steering

Rear Coil Springs

Model	Engine	Transaxle	Sunroof	AAS	Identification color						
					White	Yellow	Brown	Blue	Green	Red	Pink
MX-6	F2 NON-TURBO	M-5	—	○	R		L				
			—	—			R		L		
			○	○	R		L				
			○	—			R		L		
		EC-AT	—	○	R		L				
			—	—	R		L				
			○	○		R		L			
			○	—			R		L		
	F2 TURBO	M-5	—	○	R		L				
			○	○	R		L				
		EC-AT	—	○	R		L				
			○	○	R		L				
Sedan	F2 NON-TURBO	M-5	—	○			R		L		
			—	—				R		L	
			○	○			R		L		
			○	—					R		L
		EC-AT	—	○			R		L		
			—	—				R		L	
			○	○			R		L		
			○	—				R		L	
	F2 TURBO	M-5	—	○			R		L		
			○	○			R		L		
		EC-AT	—	○			R		L		
			○	○			R		L		
			—	—					R(4WS)		L(4WS)
Touring sedan	F2 NON-TURBO	M-5	—	○			R		L		
			—	—				R		L	
			○	○			R		L		
			○	—				R		L	
		EC-AT	—	○		R		L			
			—	—				R		L	
			○	○		R		L			
			○	—				R		L	
	F2 TURBO	M-5	—	○			R		L		
			○	○			R		L		
		EC-AT	—	○		R		L			
			○	○			R		L		

86U13X-006

○.....Available
—.....Not available
R.....Right side
L.....Left side
M-5.....Manual transaxle
EC-AT.....Electronically controlled automatic transaxle
4WS.....4-wheel steering

TROUBLESHOOTING GUIDE

Problem	Probable Cause	Remedy	Page
Body "rolls"	Weak stabilizer Worn or deteriorated stabilizer or suspension arm bushing Shock absorber malfunction	Replace Replace Replace	13—19, 23 35, 37 13—9, 25
Poor riding comfort	Weak coil spring Shock absorber malfunction	Replace Replace	13—11, 28 13—9, 25
Body tilt	Worn coil spring Worn stabilizer of suspension bushing	Replace Replace	13—11, 28 13—19, 23, 35, 37
Abnormal noise from suspension system	Poor lubrication or wear of lower arm ball joint looseness of peripheral connections Shock absorber malfunction Worn or deteriorated stabilizer or suspension arm bushing Worn or damaged front strut bearing	Replace Tighten Replace Replace Replace	13—14, 32 13—9, 25 13—19, 23, 35, 37 13—11
"Heavy" steering wheel operation	Lower arm ball joint stuck Ball joints stuck or damaged Ball joints insufficiently lubricated; foreign material; abnormal wear Improperly adjusted wheel alignment (toe-in) Worn or damaged steering gear bushing Improperly adjusted pinion pre-load Damaged steering gear Insufficient grease on steering gear Malfunction of steering shaft universal joint Low tire pressure Abnormal tire wear	Replace Replace Lubricate or replace Adjust Refer to section 10 Refer to section 10 Refer to section 10 Refer to section 10 Refer to section 10 Refer to section 12 Refer to section 12	13—14, 32 13—14, 32 13—14, 32 13—45 — — — — — — —
Steering wheel pulls to one side	Weak coil spring Lower arm or stabilizer bushing worn or damaged Damaged knuckle arm Lower arm damaged or loose Improperly adjusted wheel alignment (toe-in) Damaged steering linkage Damaged wheel bearing Uneven tire pressure Abnormal tire wear Brakes dragging	Replace Replace Refer to section 9 Replace or tighten Adjust Refer to section 10 Refer to section 9 Refer to section 12 Refer to section 12 Refer to section 11	13—11, 28 13—16, 34 — 13—14 13—46 — — — — —
Steering wheel vibrates	Suspension arm or stabilizer bushing worn or deteriorated Worn lower arm ball joint Shock absorber malfunction or looseness Improperly adjusted wheel alignment (toe-in) Damaged linkage Improperly adjusted pinion preload Worn steering gear bushing Loose steering shaft universal joint Damaged wheel bearing Abnormal tire wear Abnormal tire wear Damaged or unbalanced wheel	Replace Replace Replace or tighten Adjust Refer to section 10 Refer to section 10 Refer to section 10 Refer to section 10 Refer to section 9 Refer to section 12 Refer to section 12 Refer to section 12	13—19, 23, 35, 37 13—14, 32 13—9, 25 13—46 — — — — — — — —

86U13X-007

Problem	Probable Cause	Remedy	Page
Excessive steering wheel play	Worn or damaged lower arm bushing	Replace	13—16, 34
	Improperly adjusted pinion preload	Refer to section 10	—
	Worn rack and pinion	Refer to section 10	—
	Loose steering shaft universal joint	Refer to section 10	—
General instability	Weak coil springs	Replace	13—11, 28
	Shock absorber malfunction	Replace	13—9, 25
	Worn or damaged lower arm or stabilizer bushing	Replace	13—19, 34
	Improperly adjusted wheel alignment	Adjust	13—46, 48
	Improperly adjusted pinion preload	Refer to section 10	—
	Loose steering shaft universal joint	Refer to section 10	—
	Incorrect tire pressure	Refer to section 12	—
	Damaged or unbalanced wheel	Refer to section 12	—
	Malfunction of wheel bearing	Refer to section 9	—

86U13X-007

FRONT SHOCK ABSORBER AND SPRING

REMOVAL AND INSTALLATION

1. Jack up the front of the vehicle and support it with safety stands.
2. Remove in the sequence shown in the figure referring to the removal note for the specially marked parts.
3. Install in the reverse order of removal referring to the installation note for the specially marked parts.
4. Tighten all nuts and bolts to the specified torque, referring to the figure.

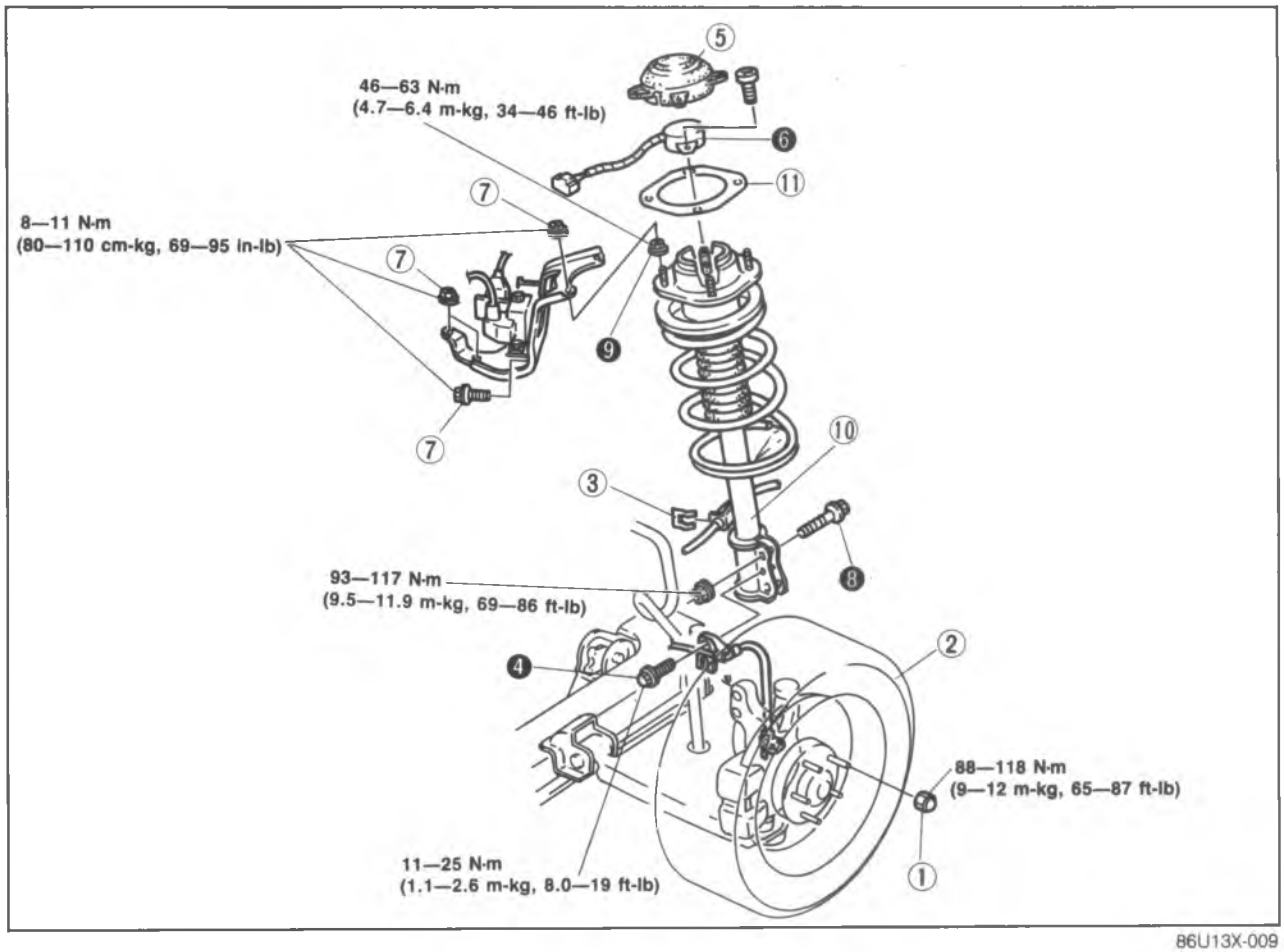

86U13X-009

1. Lug nut
2. Wheel and tire
3. Clip
4. Harness and bracket bolt (ABS)
5. Rubber cap
6. Actuator (AAS)
7. Nuts and bolts (Ignition coil bracket)
8. Bolt and nut
9. Nut
10. Shock absorber assembly
11. Seat

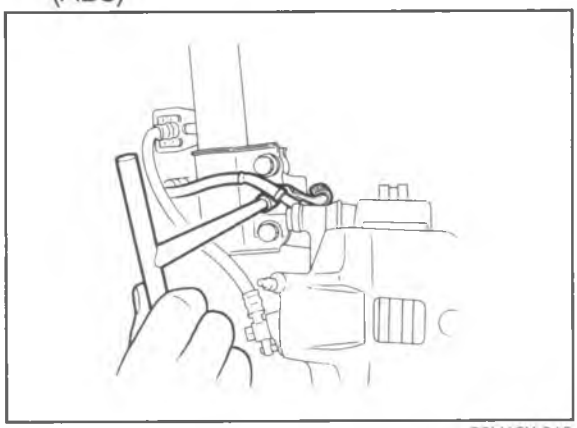

86U13X-010

Removal Note
ABS Harness bracket
Remove the ABS harness and bracket.

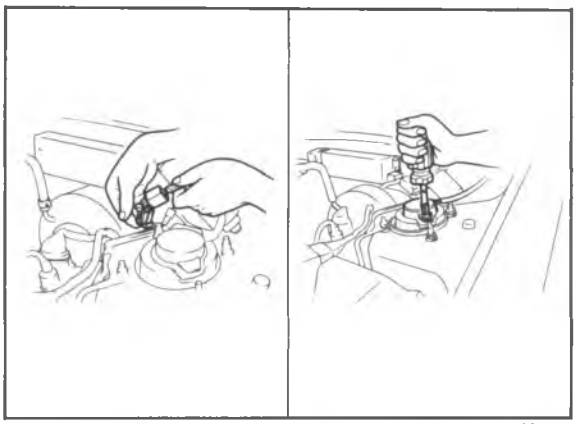

86U13X-011

AAS actuator

1. Disconnect the AAS actuator connector.
2. Remove the AAS actuator.

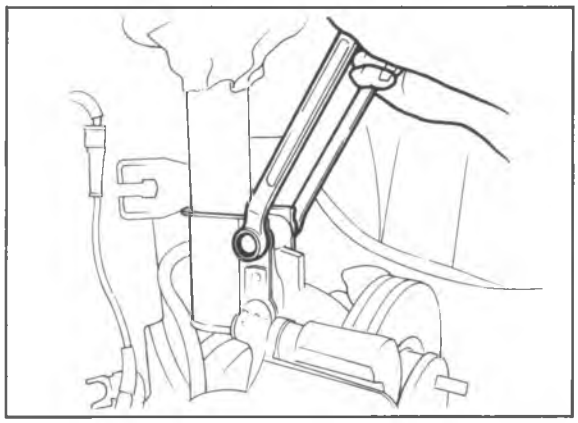

86U13X-012

Shock absorber clinch bolts and nuts

1. Remove the shock absorber clinch bolts and nuts.
2. Remove the upper mounting shock absorber nuts.

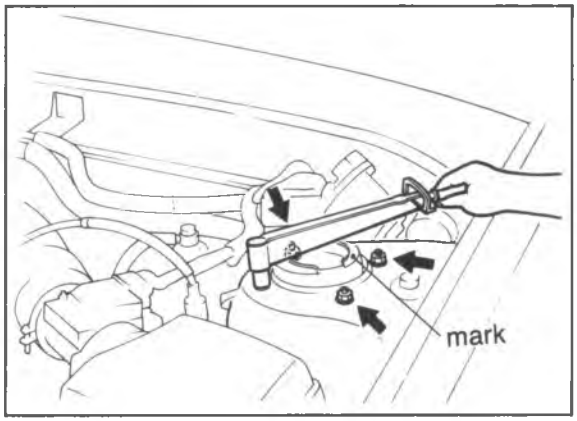

86U13X-013

Installation Note
Mounting block

Install the mounting block to the suspension tower with the white mark facing the front-inside direction.

Tightening torque: 46—63 N·m (4.7—6.4 m-kg, 34—46 ft-lb)

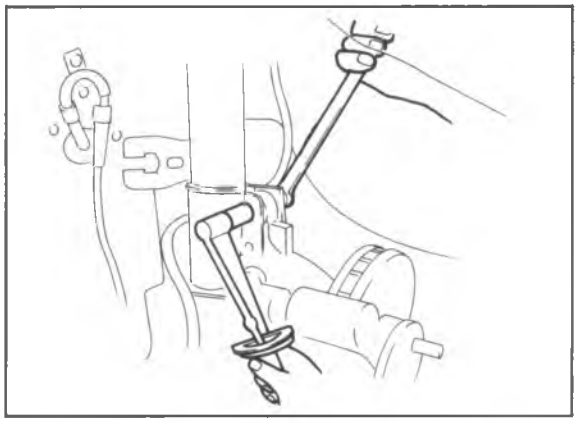

86U13X-014

Shock absorber clinch bolts and nuts

Install the clinch bolts and nuts.

Tightening torque: 93—117 N·m (9.5—11.9 m-kg, 69—86 ft-lb)

DISASSEMBLY AND ASSEMBLY

1. Disassemble in the sequence shown in the figure referring to the disassembly note for the specially marked parts.
2. Inspect all components and parts, referring to inspection note.
3. Assemble in the reverse order of disassembly referring to the assembly note for the specially marked parts.
4. Tighten all nuts and bolts to the specified torque, referring to the figure.

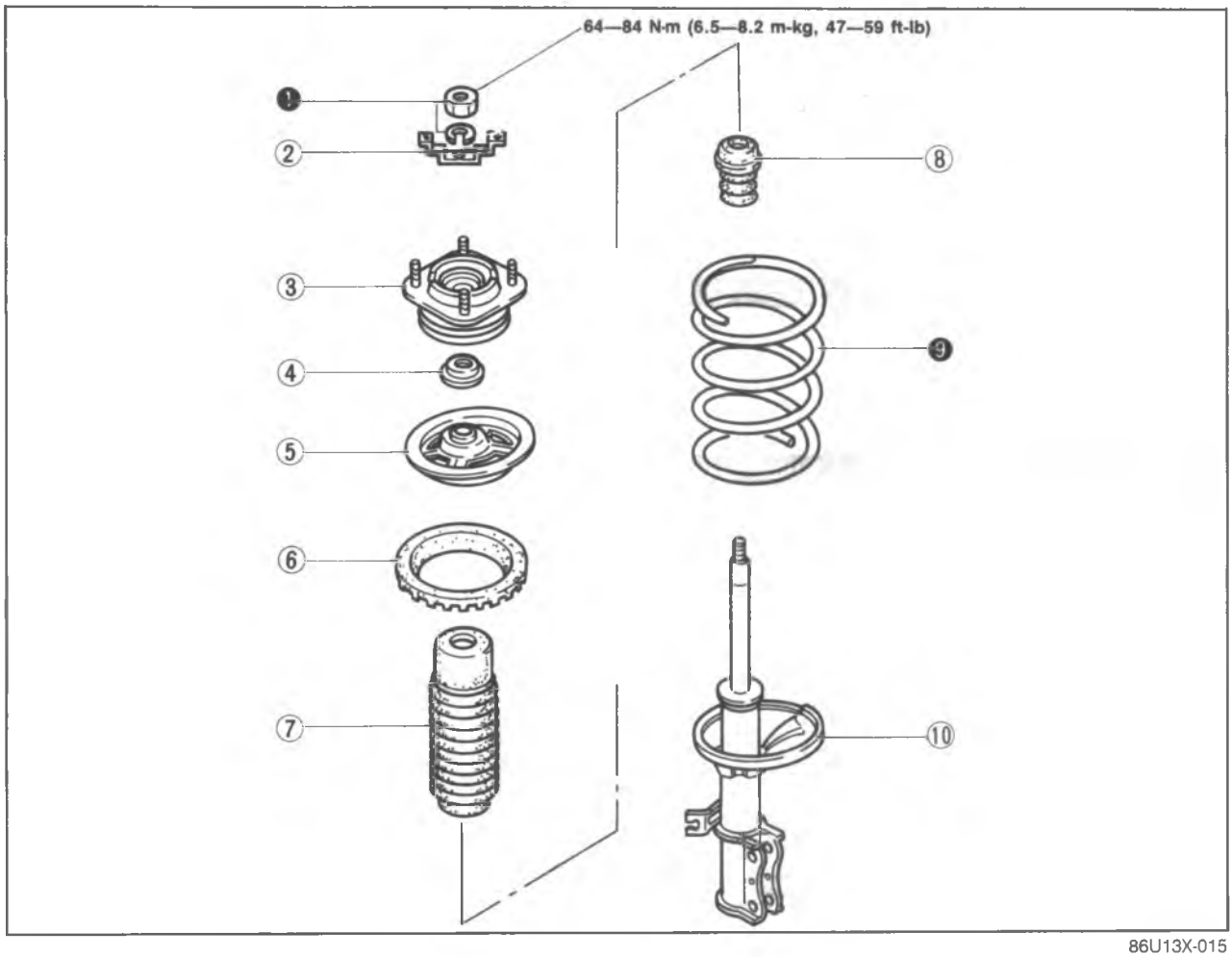

86U13X-015

1. Nut
2. Actuator bracket
3. Mounting block
4. Bearing
5. Spring upper seat
6. Spring seat
7. Dust boot
8. Bound stopper
9. Coil spring
10. Shock absorber

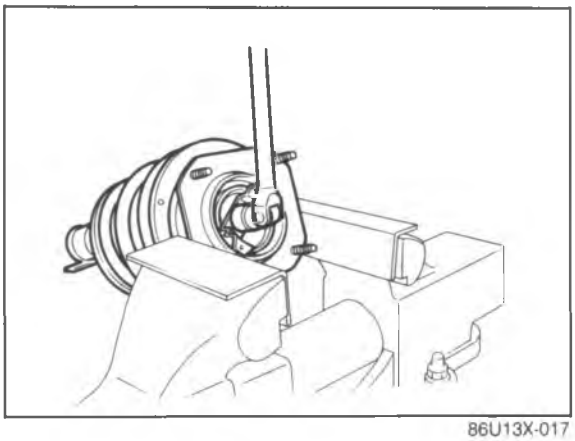

86U13X-017

Disassembly Note

1. Loosen the piston rod upper nut several turns, but do not remove.

Caution

a) Do not remove the nut.

b) Use copper or aluminum plates in the jaws of the vice.

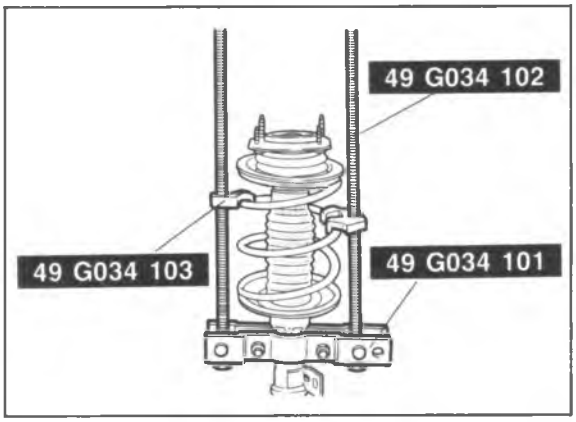

86U13X-018

2. Set the **SST** in a vise.
3. Secure the shock absorber in the **SST**.
4. Compress the coil spring with the **SST**, then remove the upper nut.
5. Remove the coil spring.

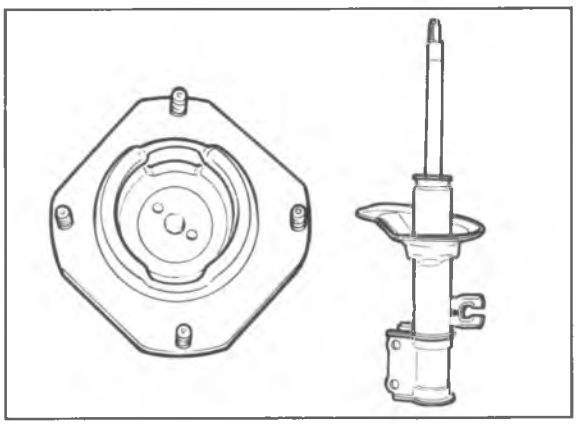

86U13X-019

Inspection Note

Check the following and repair or replace any faulty parts.

1. Oil leakage or abnormal noise from shock absorbers
2. Deterioration or damage of mounting block and bearing
3. Wear or damage of the bound stopper

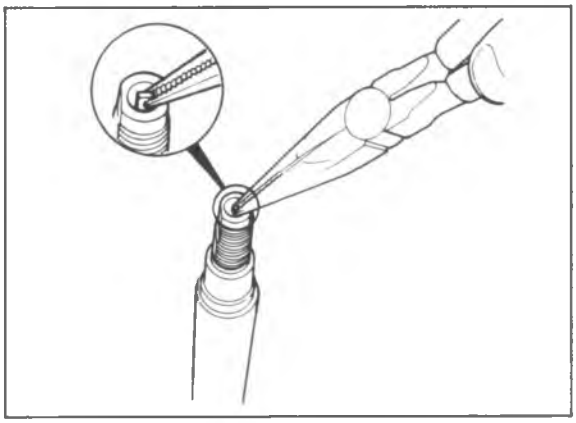

86U13X-020

4. Smooth rotation of control rod (AAS)

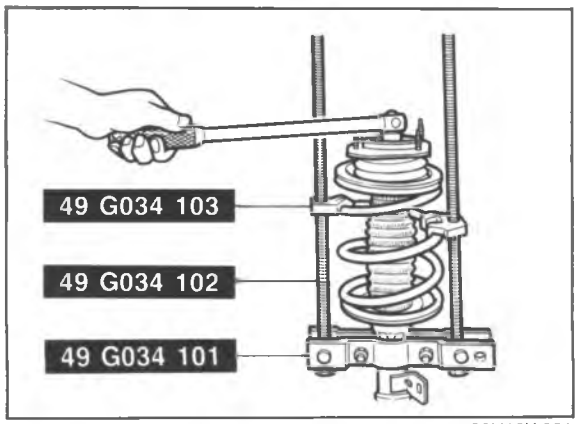

86U13X-021

Assembly Note

1. Set the **SST** in a vise
2. Secure the shock absorber in the **SST**.
3. Install the bound stopper and dust boot to the shock absorber.
4. Install the compressed coil spring (compressed with **SST**).
5. Install the rubber seat, spring upper seat, bearing and mounting block.

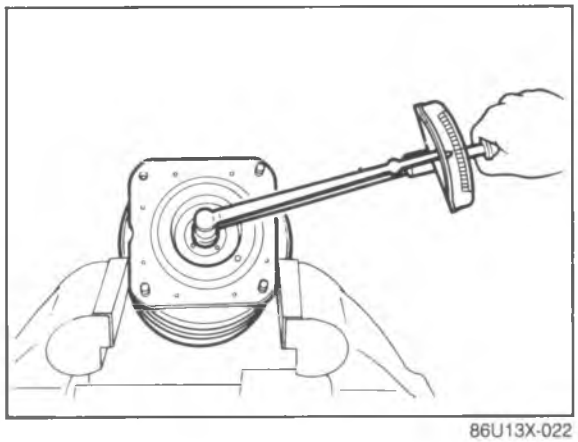
86U13X-022

6. Remove the **SST**.
7. Secure the mounting block in the vise.

Caution
Use copper or aluminum plates in the jaws of the vice.

8. Tighten the piston rod upper nut.

Tightening torque: 64—84 N·m (6.5—8.2 m-kg, 47—59 ft-lb)

Caution
Check that the spring is well seated in the upper seats.

FRONT LOWER ARM

REMOVAL AND INSTALLATION

1. Jack up the front of the vehicle and support it with safety stands.
2. Remove in the sequence shown in the figure referring to the removal note for the specially marked parts.
3. Inspect all components and parts, referring to inspection note.
4. Install in the reverse order of removal referring to the installation note for the specially marked parts.
5. Tighten all nuts and bolts to the specified torque, referring to the figure.

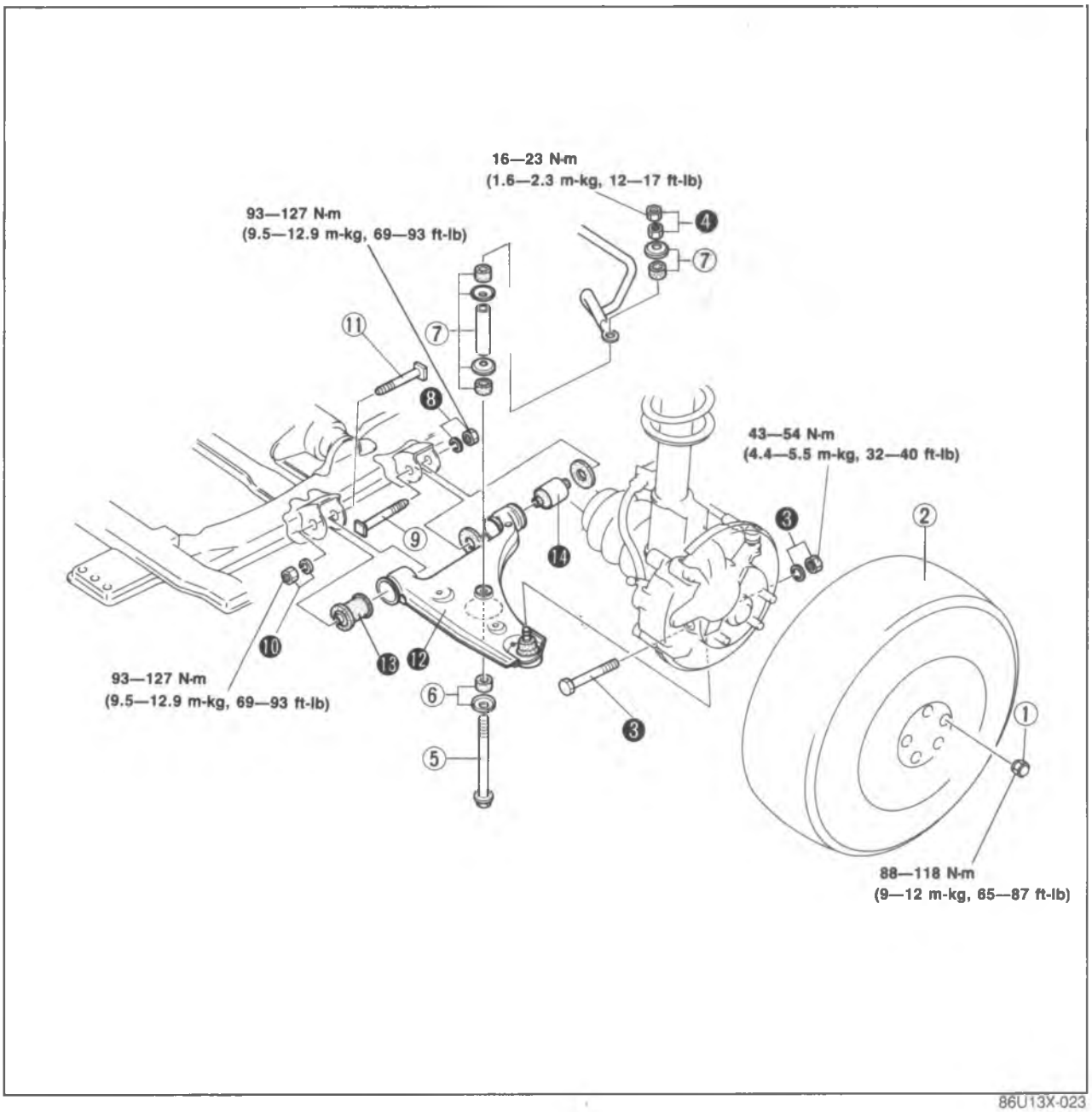

86U13X-023

1. Lug nut
2. Wheel and tire
3. Bolt and nut
4. Nuts
5. Bolt
6. Retainer and bushing
7. Retainer, bushing and spacer
8. Nut
9. Bolt
10. Nut
11. Bolt
12. Front lower arm
13. Front bushing
14. Rear bushing

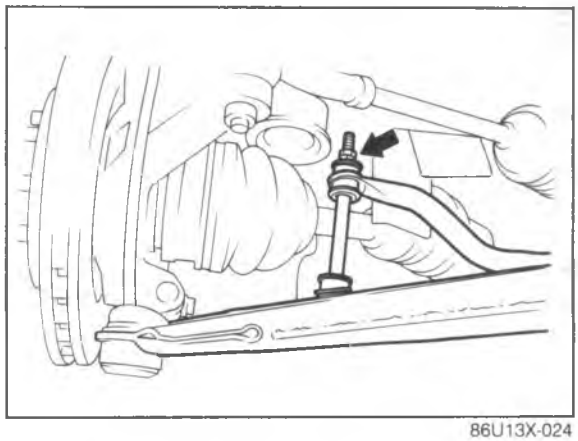

86U13X-024

Removal Note

1. Remove the stabilizer bar control link.

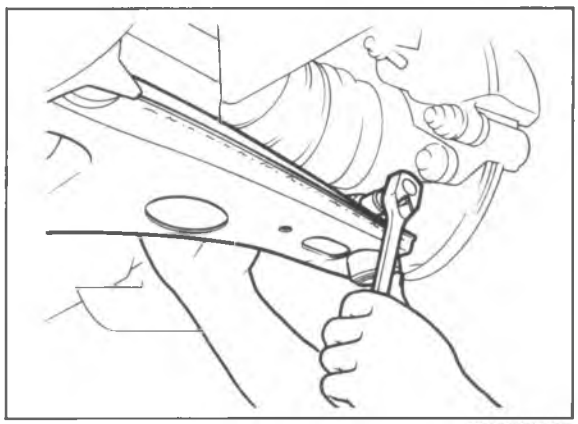

86U13X-025

2. Remove the lower arm ball joint.

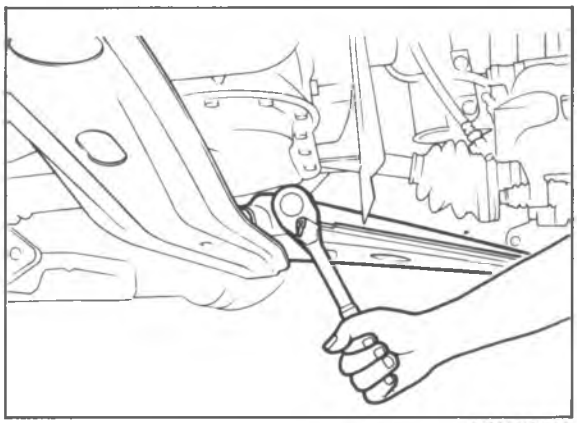

86U13X-026

3. Remove the lower arm spindle from the lower arm.

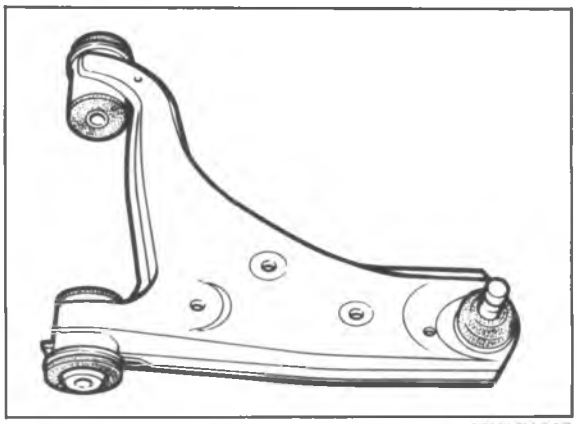

86U13X-027

Inspection Note
Check the following and repair or replace any faulty parts.
1. Lower arm for damage or cracks
2. Preload of ball joint
3. Bushings for deterioration or wear
4. Dust boot for damage

Note
If it is necessary to replace the ball joint, replace the lower arm assembly.

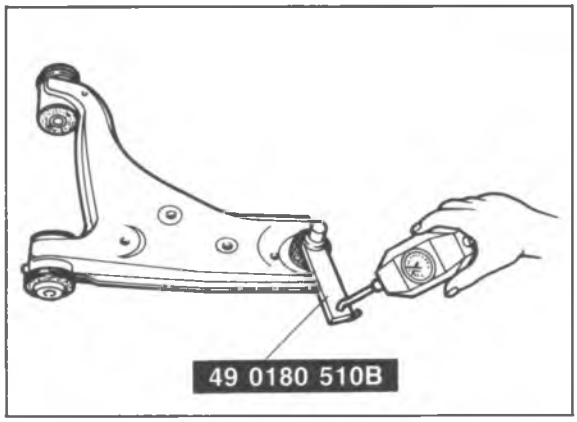

86U13X-028

Ball joint preload
Attach the **SST** to the ball stud, and measure the preload with a pull scale.

Caution
Measure the preload after shaking ball joint the stud 3 or 4 times.

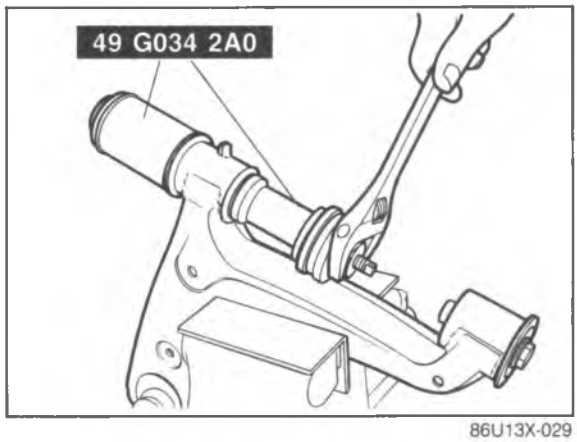

86U13X-029

Lower arm bushing (Front)
Removal
1. Cut away the projecting rubber of the lower arm bushing.
2. Set the **SST** on the lower arm and remove the bushing.

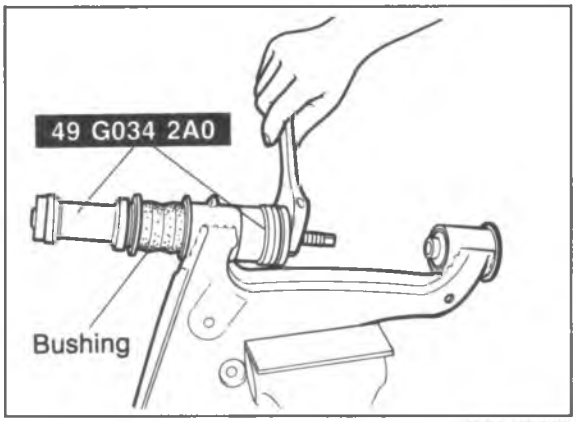

86U13X-030

Installation
Apply soapy water to the new bushing, then pull it into the lower arm with the **SST**.

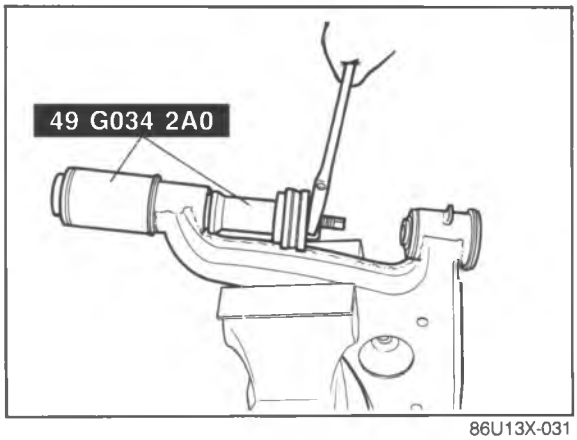

86U13X-031

Lower arm bushing (Rear)
Removal
Set the **SST** on the lower arm and remove the bushing.

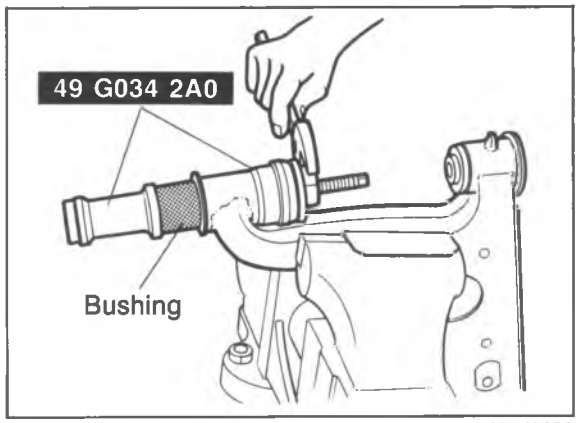

86U13X-032

Installation
Install the new bushing, and then pull it into the lower arm with the **SST**.

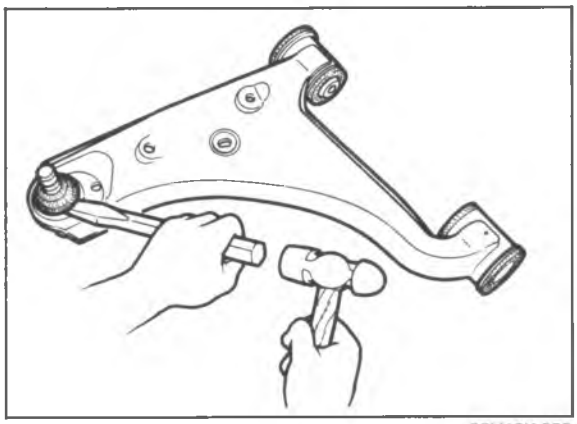
86U13X-033

Ball joint dust boot
Removal
Remove the dust boot with a chisel.

Caution
Do not damage the ball joint.

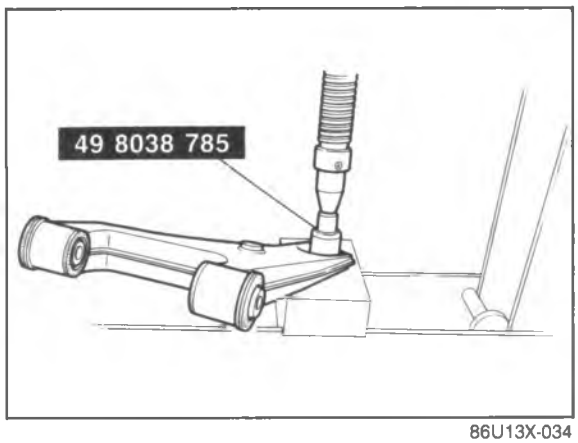

86U13X-034

Installation
1. Liberally coat the inside of the new dust boot with grease.
2. Install the dust boot onto the ball joint with the **SST**.

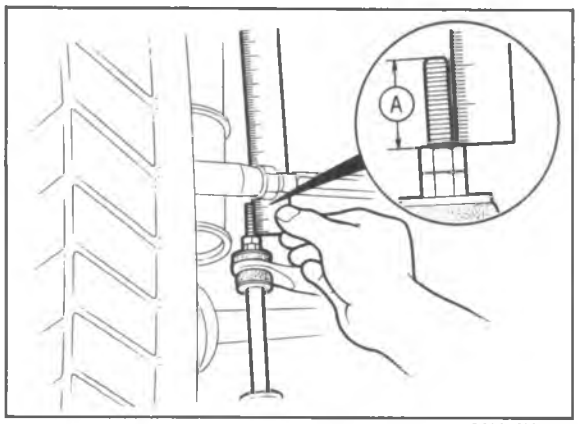

86U13X-035

Installation Note
Stabilizer control
Tighten the link nut so that there is **20.1 mm (0.79 in)** of thread (A) exposed.

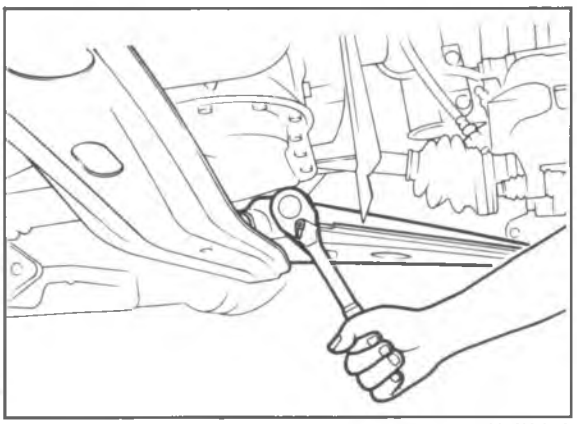

86U13X-036

Lower arm

1. Install the lower arm spindle to the lower arm, and loosely tighten the nut.

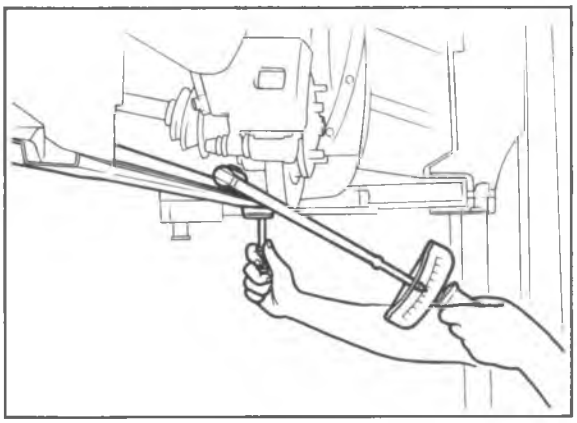

86U13X-037

2. Install the lower arm ball joint to the knuckle arm.

   Tightening torque: 43—54 N·m (4.4—5.5 m-kg, 32—40 ft-lb)

   Caution
   Lower the vehicle and check the torque with the vehicle unloaded.

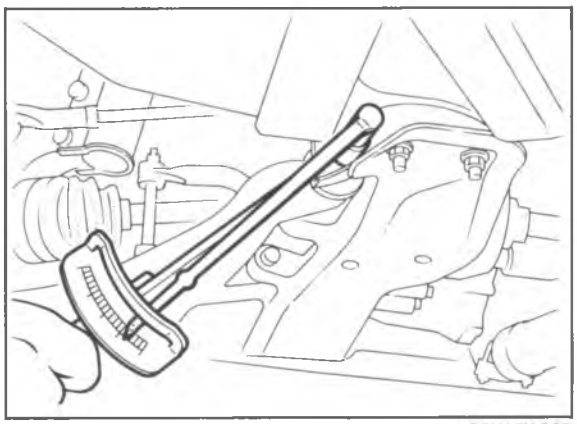

86U13X-038

3. Lower the vehicle from the jack. Torque the lower arm spindle nut which was loosely tightened in step (1).

   Tightening torque:
   Front and rear lower arm spindle nut

   93—127 N·m (9.5—12.9 m-kg, 69—93 ft-lb)

   Caution
   Lower the vehicle and check the torque with the vehicle unloaded.

FRONT STABILIZER (4WS)

REMOVAL AND INSTALLATION

1. Jack up the front of the vehicle and support it with safety stands.
2. Remove in the sequence shown in the figure referring to the removal note for the specially marked parts.
3. Inspect all components and parts, referring to inspection note.
4. Install in the reverse order of removal referring to the installation note for the specially marked parts.
5. Tighten all nuts and bolts to the specified torque, referring to the page 13—22.

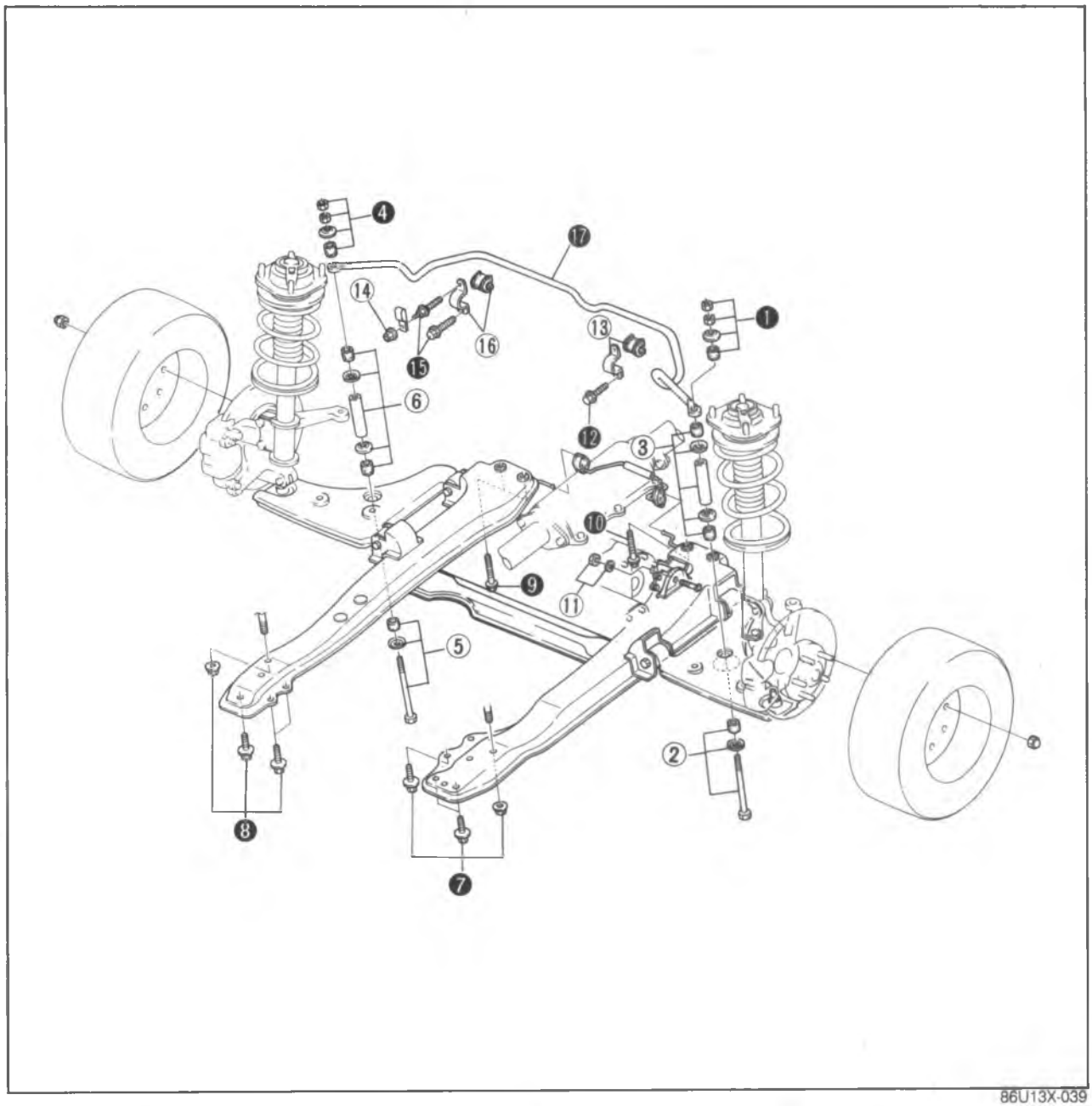

1. Nut, retainer, and bushing
2. Bolt, retainer, and bushing
3. Bushing, retainer, and spacer
4. Nut, retainer, and bushing
5. Bolt, retainer, and bushing
6. Bushing, retainer, and spacer
7. Bolt and nut
8. Bolt and nut
9. Bolt
10. Bolt
11. Bolt
12. Bolt
13. Bushing and bracket
14. Nut
15. Bolt
16. Bushing and bracket
17. Stabilizer

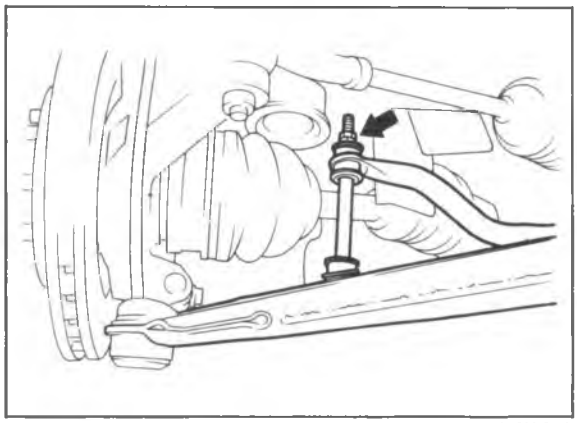

86U13X-040

Removal Note

1. Remove the wheel and tire.
2. Remove the stabilizer bar control link.

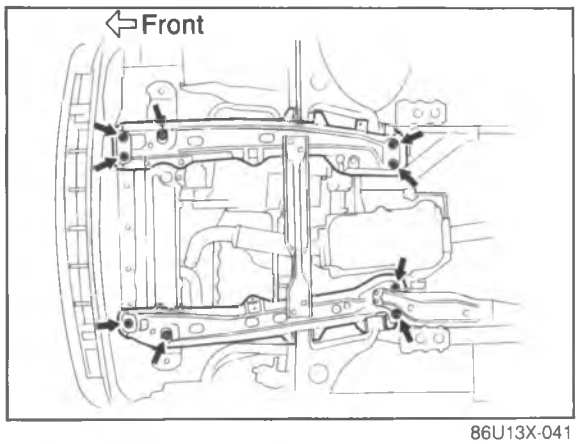

86U13X-041

3. Remove the bolts indicated by the arrows.

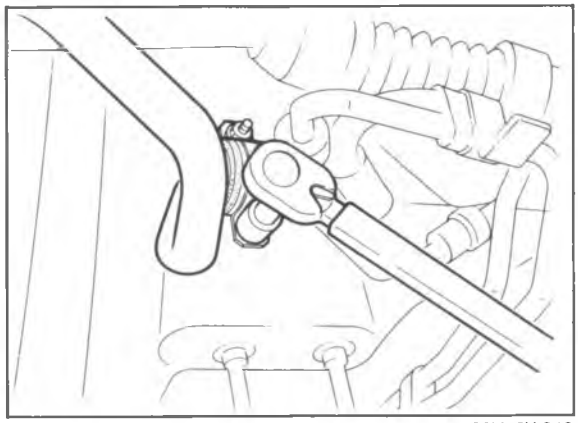

86U13X-042

4. Remove the stabilizer bushing and bracket.

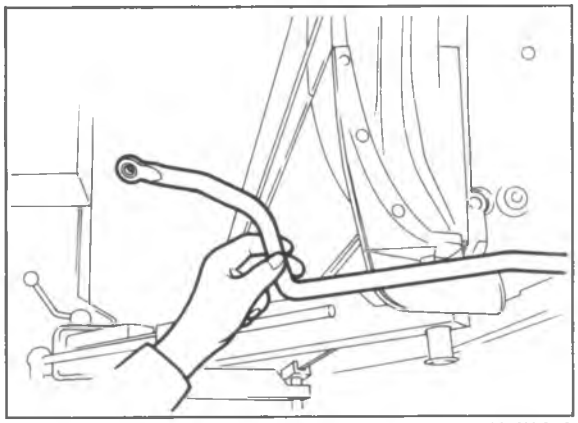

86U13X-043

5. Remove the stabilizer.

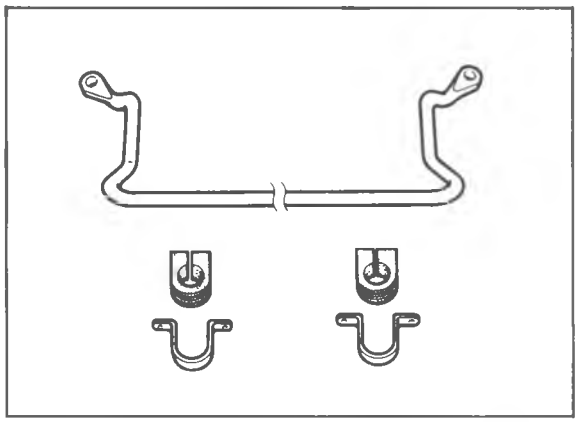

86U13X-044

Inspection Note
Check the following and repair or replace any faulty parts.
1. Stabilizer for bending or damage
2. Stabilizer bushings for deterioration or wear

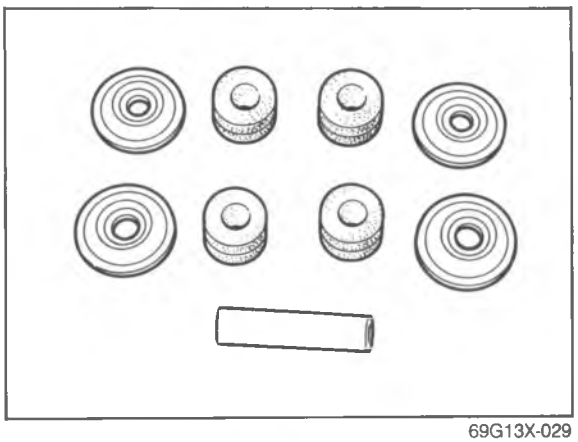

69G13X-029

3. Retainers and spacers for bending or damage
4. Bushings for deterioration or wear
5. Bolts for bending or damage

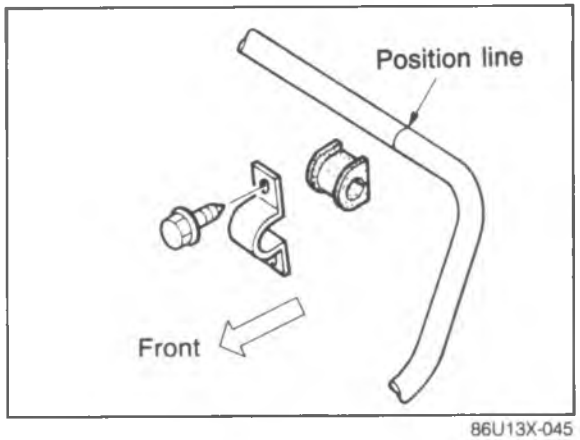

86U13X-045

Installation Note
Stabilizer bushing and control link
Align the bushing with the installation position line on the stabilizer, mount it so that the notch faces the rear of the chassis.

Caution
Mount the brackets of the stabilizer first and loosely tighten them. After mounting the control links, tighten the bracket to the specified torque with the vehicle on the ground and unloaded.

Tightening torque: 36—54 N·m (3.7—5.5 m-kg, 27—40 ft-lb)

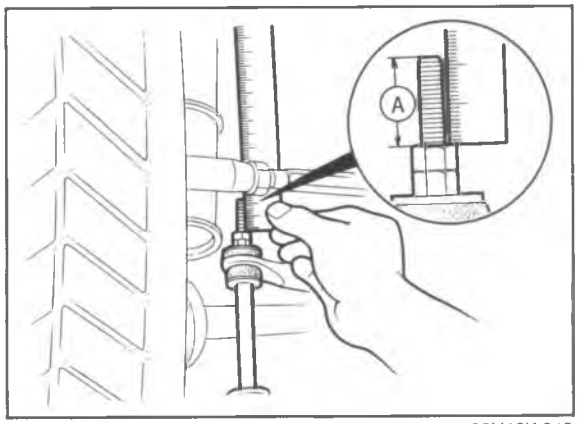

86U13X-046

Tighten the link nut so that there is **20.1mm (0.79 in)** of thread (A) exposed beyond it.

Tightening torque

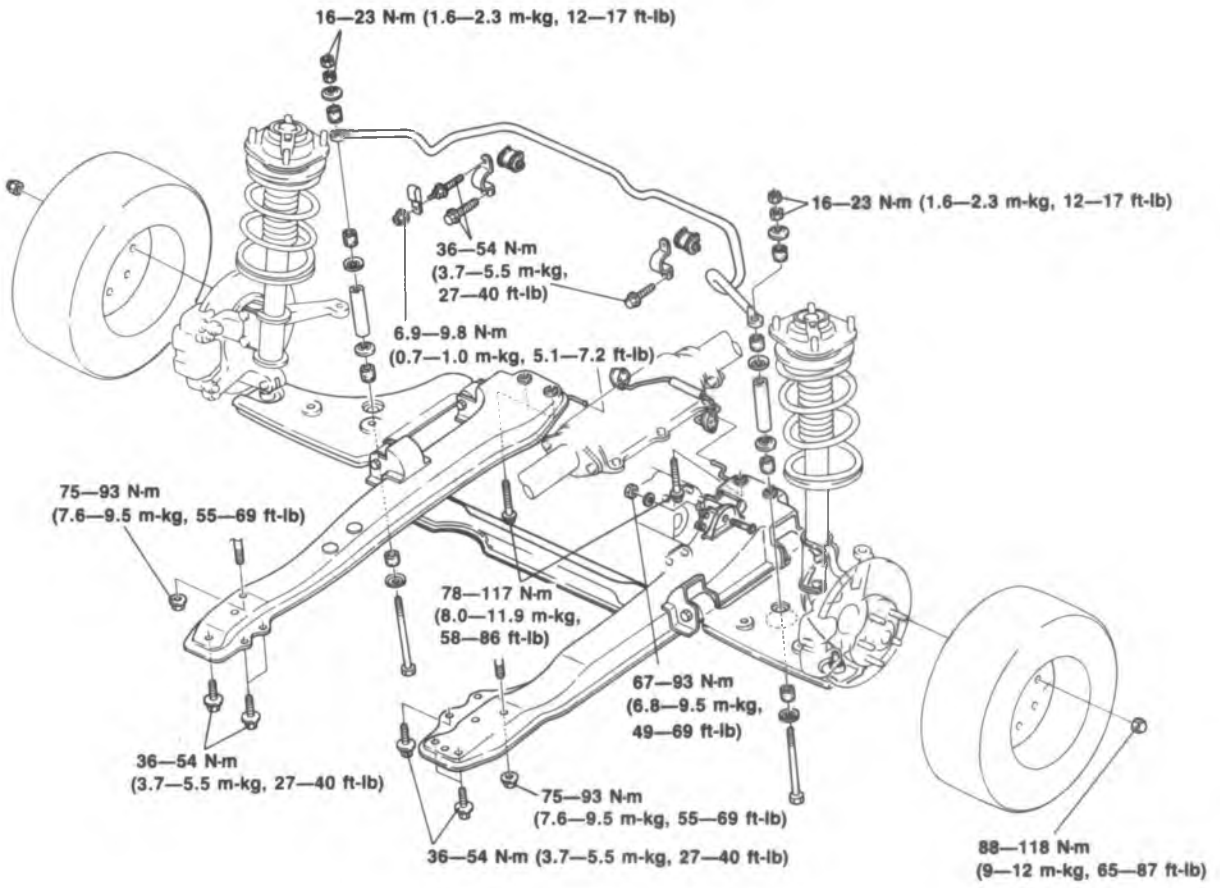

86U13X-047

FRONT STABILIZER

REMOVAL AND INSTALLATION

1. Jack up the front of the vehicle and support it with safety stands.
2. Remove in the sequence shown in the figure.
3. Inspect all components and parts, referring to inspection note.
4. Install in the reverse order of removal referring to the installation note for the specially marked parts.
5. Tighten all nuts and bolts to the specified torque, referring to the figure.

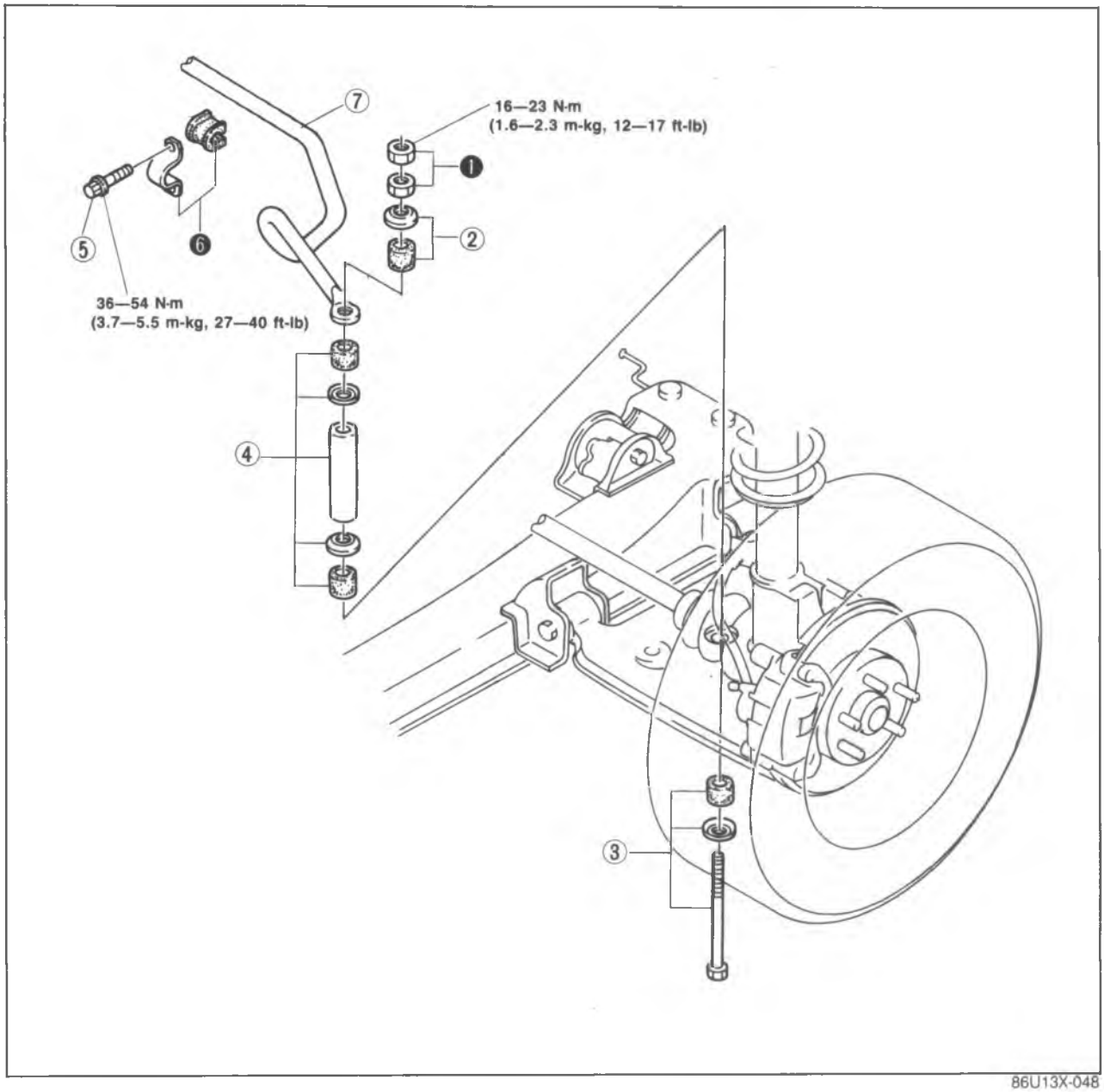

86U13X-048

1. Nuts
2. Retainer and bushing
3. Bolt, retainer, and bushing
4. Bushing, retainer, and spacer
5. Bolt
6. Bushing and bracket
7. Stabilizer

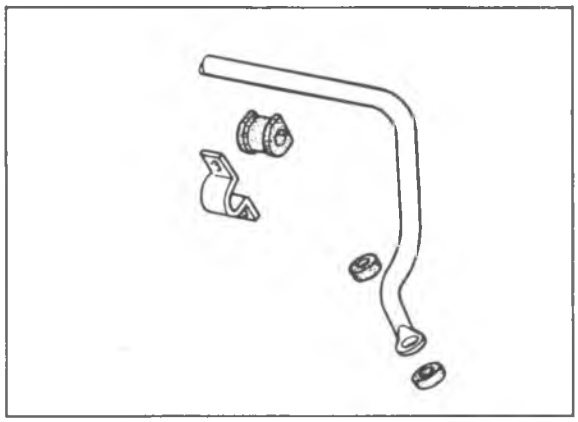

86U13X-049

Inspection Note
Check the following and repair or replace any faulty parts.
1. Stabilizer for bending or damage
2. Stabilizer bushings for deterioration or wear.
3. Retainers and spacers for bending or damage.
4. Mounting bushings for deterioration or wear.
5. Bolts for bending or damage.

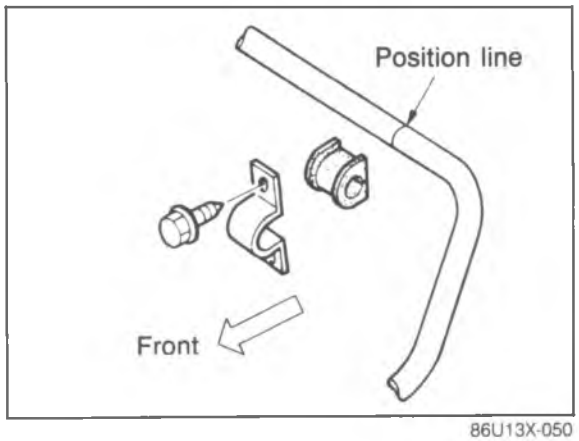

86U13X-050

Installation Note
Stabilizer bushing
Align the bushing with the installation position line on the stabilizer, and mount it so that the notch faces the rear of the chassis.

Caution
Mount the brackets of the stabilizer first and loosely tighten them. After mounting the control links, tighten the brackets to the specified torque with the vehicle on the ground and unloaded.

Tightening torque: 36—54 N·m (3.7—5.5 m-kg, 27—40 ft-lb)

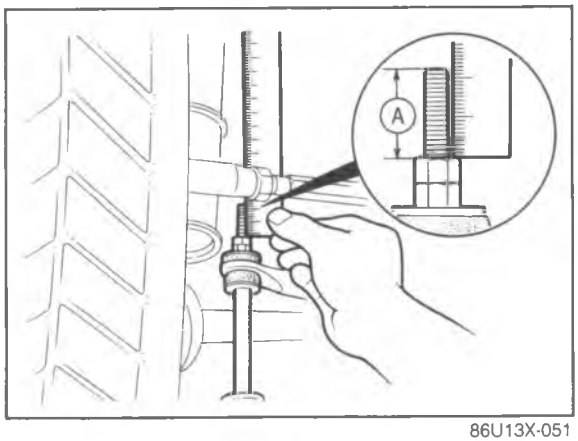

86U13X-051

Tighten the link nut so that there is **20.1 mm (0.79 in)** of thread (A) exposed beyond it.

REAR SHOCK ABSORBER AND SPRING

REMOVAL AND INSTALLATION

1. Jack up the front of the vehicle and support it with safety stands.
2. Remove in the sequence shown in the figure referring to the removal note for the specially marked parts.
3. Install in the reverse order of removal referring to the installation note for the specially marked parts.
4. Tighten all nuts and bolts to the specified torque, referring to the figure.

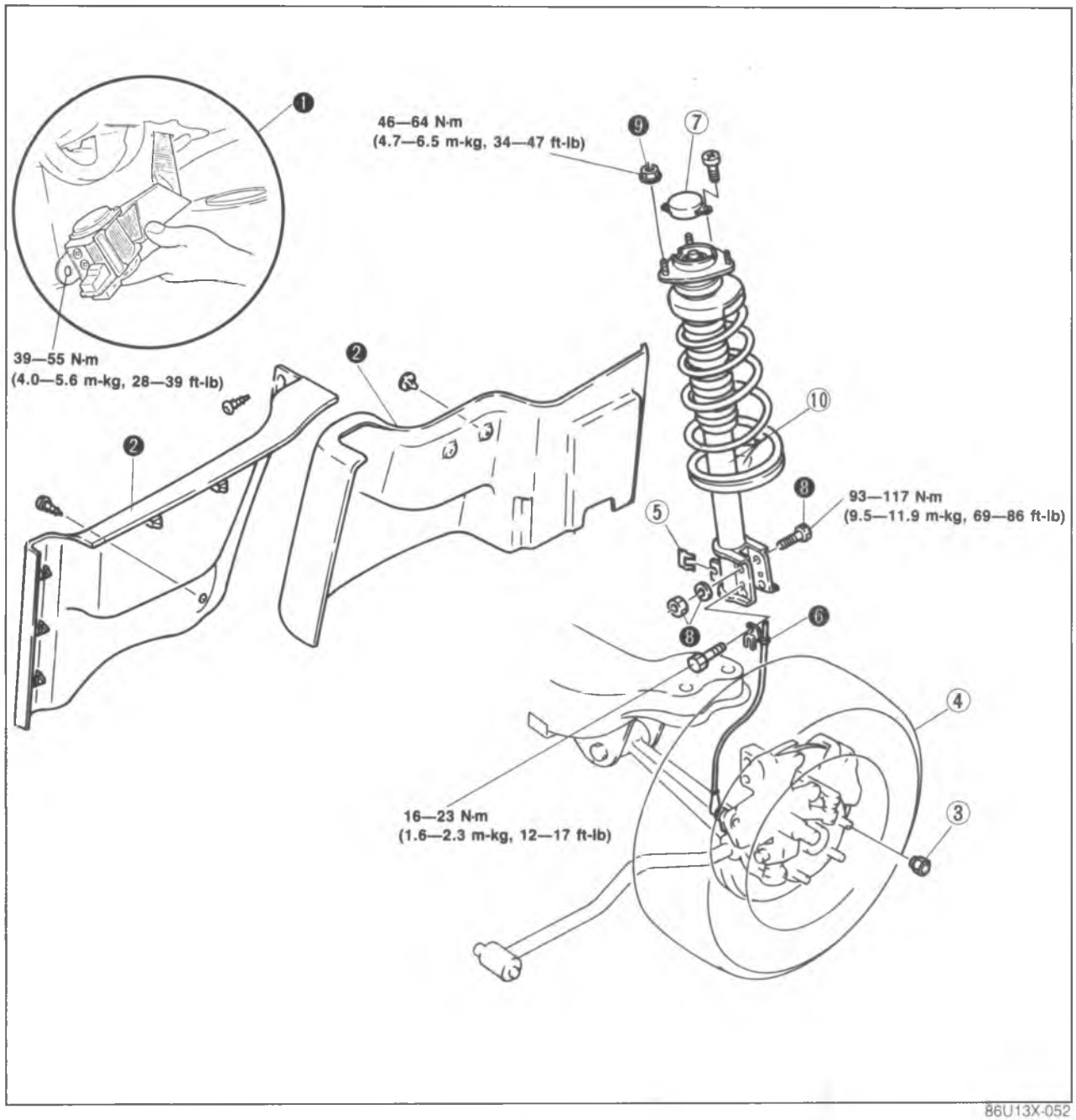

1. Bolt (seat belt)
2. Trim
3. Lug nut
4. Wheel and tire
5. Clip
6. Harness and bracket (ABS)
7. Actuator (AAS)
8. Bolt and nut
9. Nut
10. Shock absorber assembly

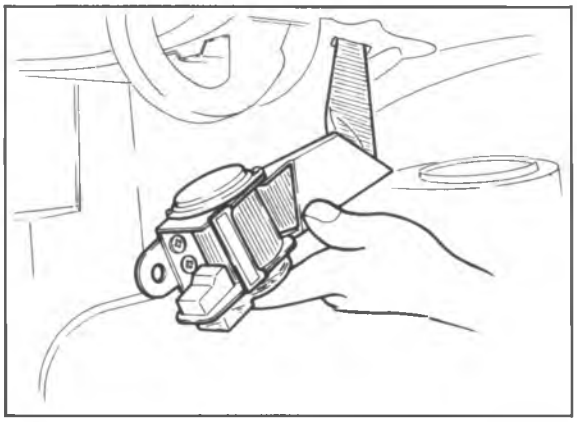

86U13X-053

Removal Note
Seat belt and trim
1. Remove the seat belt.

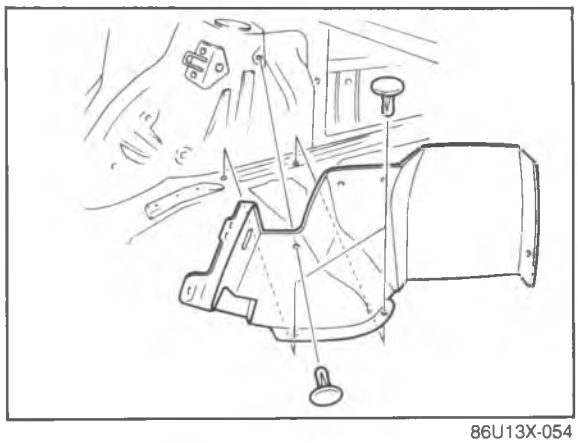

86U13X-054

2. Remove the trim.

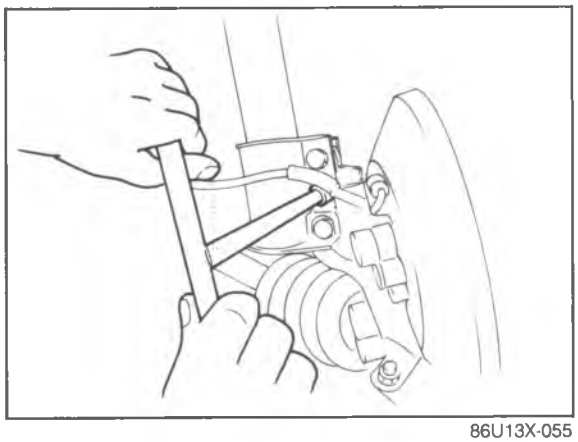

86U13X-055

ABS harness bracket
Remove the ABS harness and bracket.

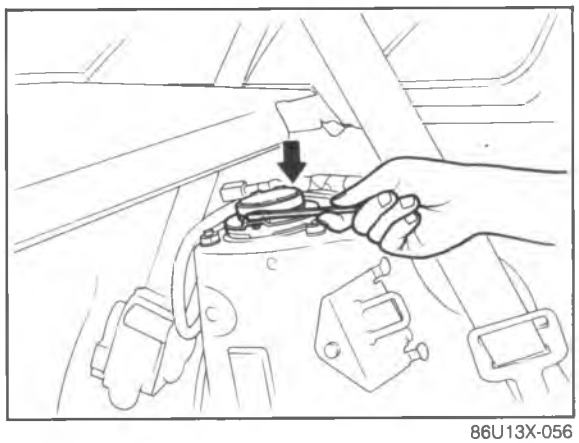

86U13X-056

AAS actuator
1. Disconnect the AAS actuator connector.
2. Remove the AAS actuator.

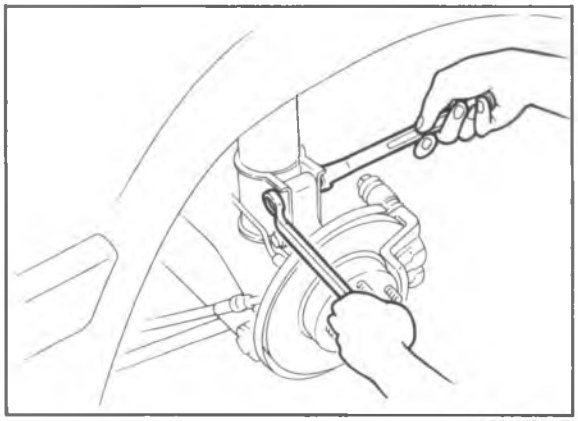

86U13X-057

Shock absorber clinch bolts and nuts
Remove the clinch bolts.

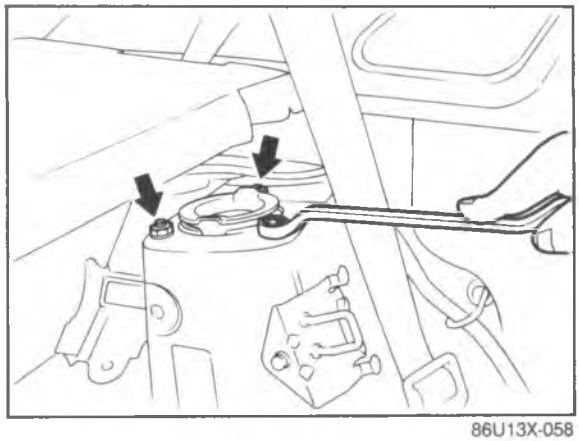

86U13X-058

Shock absorber upper nuts
Remove the upper mounting shock absorber nuts.

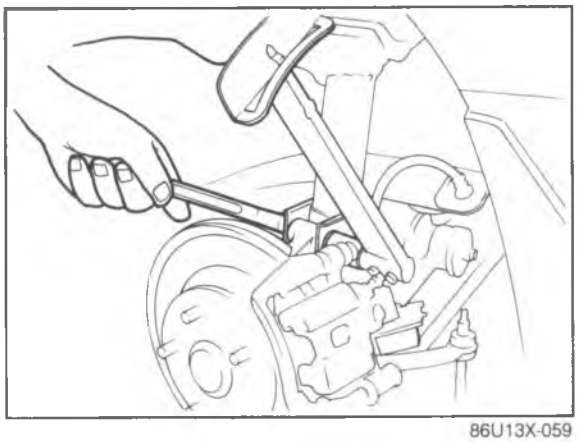

86U13X-059

Installation Note
Shock absorber
Tighten the shock absorber mounting bolts and nuts.

Tightening torque:
Upper nuts 46—64 N·m
(4.7—6.5 m-kg, 34—47 ft-lb)
Clinch bolts 93—117 N·m
(9.5—11.9 m-kg, 69—86 ft-lb)

DISASSEMBLY AND ASSEMBLY

1. Disassemble in the sequence shown in the figure referring to the disassembly note for the specially marked parts.
2. Inspect all components and parts, referring to inspection note.
3. Assemble in the reverse order of disassembly referring to the assembly note for the specially marked parts.
4. Tighten all nuts and bolts to the specified torque, referring to the figure.

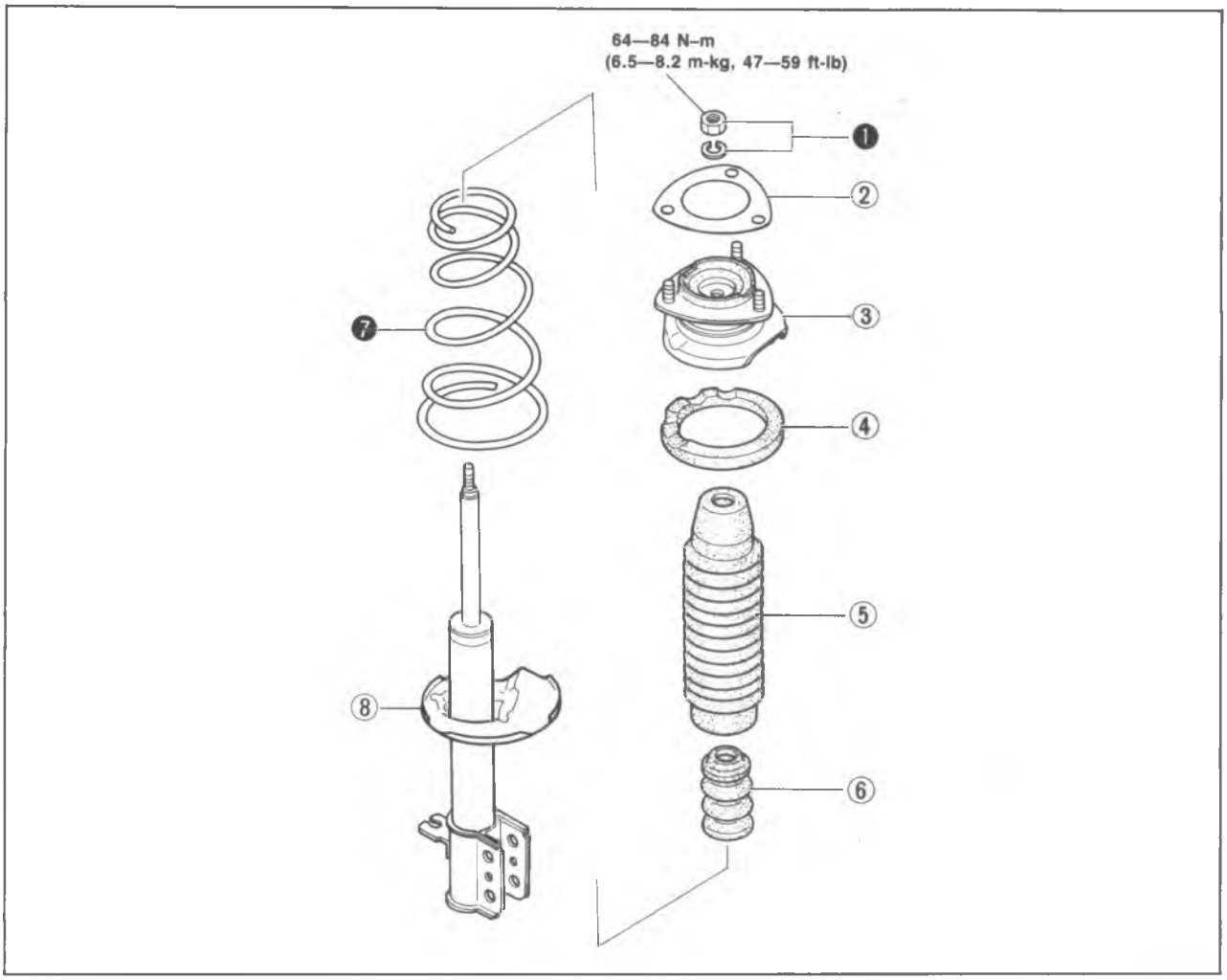

86U13X-060

1. Nut
2. Seat
3. Mounting block
4. Spring seat
5. Dust boot
6. Bound stopper
7. Coil spring
8. Shock absorber

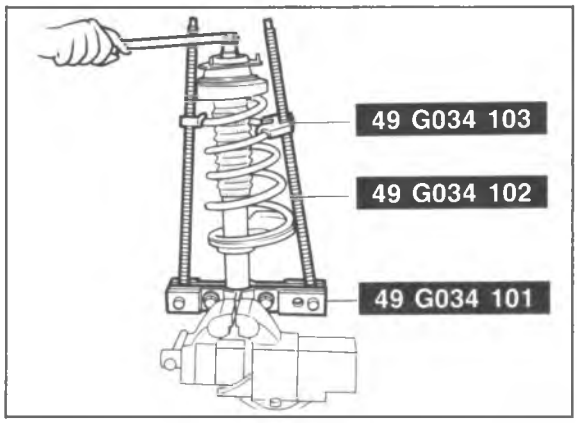

86U13X-061

Disassembly Note

1. Loosen the piston rod upper nut several turns, but do not remove.

Caution
a) Do not remove the nut.
b) Use copper or aluminum plates in the jaws of the vise.

2. Set the **SST** in a vise.
3. Secure the shock absorber in the **SST**.
4. Compress the coil spring with the **SST**, then remove the nut.
5. Remove the coil spring.

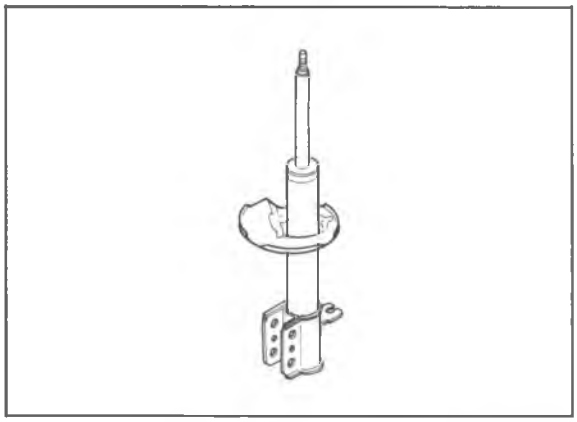

86U13X-062

Inspection Note
Check the following and repair or replace any faulty parts.

1. Oil leakage or noise from shock absorbers
2. Deterioration or damage of mounting block
3. Wear or damage of bound stopper

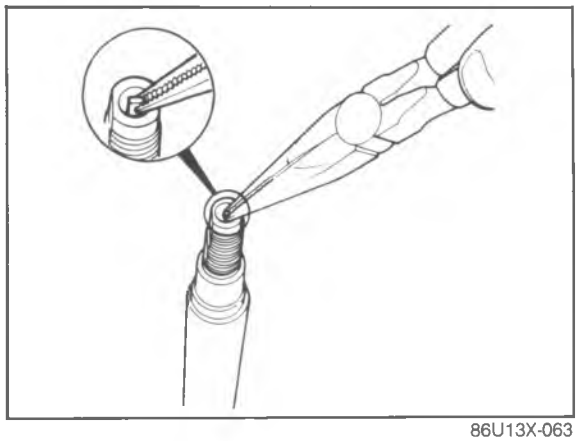

86U13X-063

4. Rotation of the control rod (AAS).

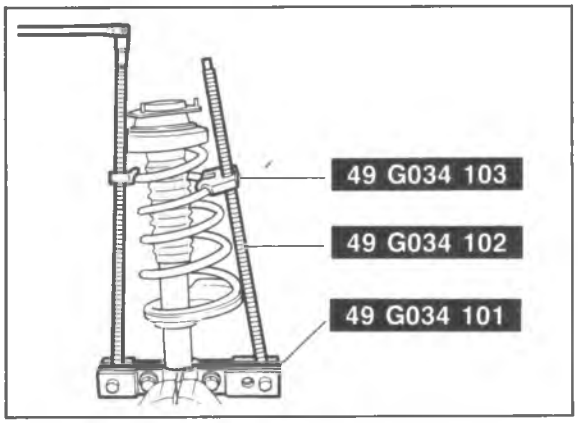

86U13X-064

Assembly Note
1. Set the **SST** in a vise
2. Secure the shock absorber in the **SST**.
3. Install the bound stopper and dust boot onto, the shock absorber.
4. Install the compressed coil spring (compressed with **SST**).
5. Install the spring seat and mounting block.

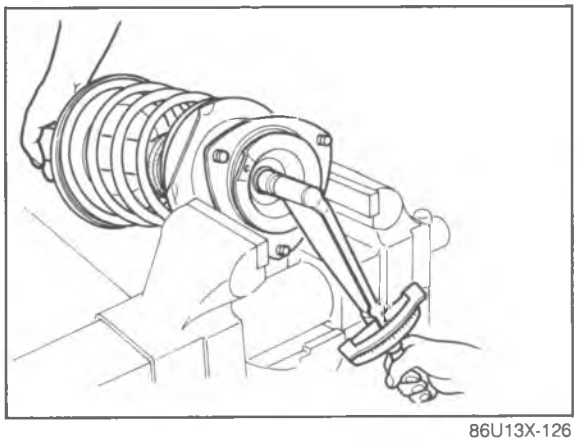

86U13X-126

6. Remove the **SST**.
7. Secure the mounting blocks in the vise.

Caution
Use copper or aluminum plate in the jaws of the vice.

8. Tighten the piston rod upper nut.

Tightening torque:
64—84 N·m (6.5—8.2 m-kg, 47—59 ft-lb)

Caution
Check that the spring is well seated in the upper seats.

LATERAL LINK AND TRAILING LINK

REMOVAL AND INSTALLATION

1. Jack up the front of the vehicle and support it with safety stands.
2. Remove in the sequence shown in the figure referring to the removal note for the specially marked parts.
3. Inspect all components and parts, referring to inspection note.
4. Install in the reverse order of removal referring to the installation note for the specially marked parts.
5. Tighten all nuts and bolts to the specified torque, referring to the figure.

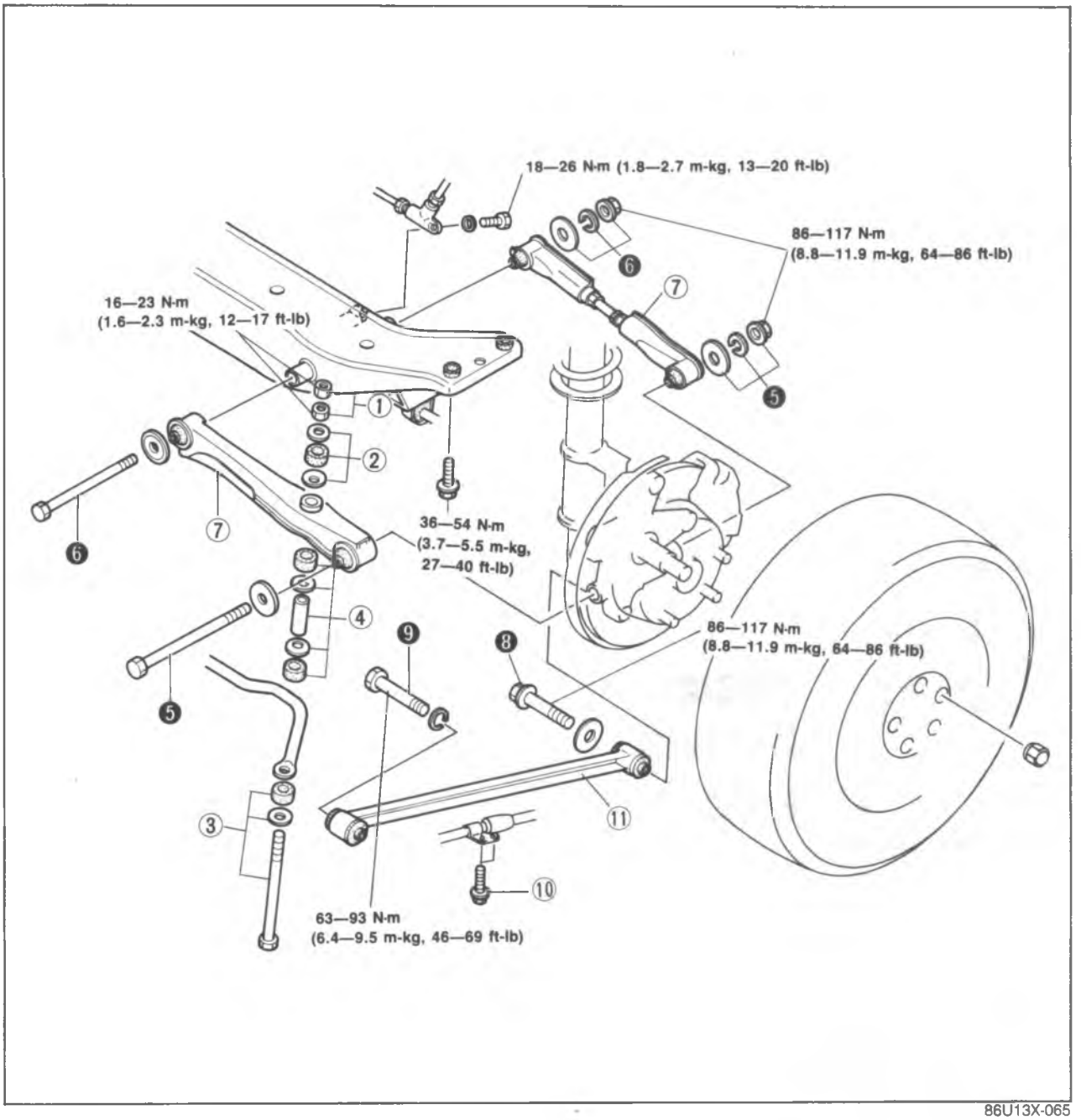

86U13X-065

1. Nut
2. Bushing and retainer
3. Retainer, bushing, and bolt
4. Retainer, bushing, and spacer
5. Bolt and nut
6. Bolt and nut
7. Lateral link
8. Bolt
9. Bolt
10. Bolts
11. Trailing link

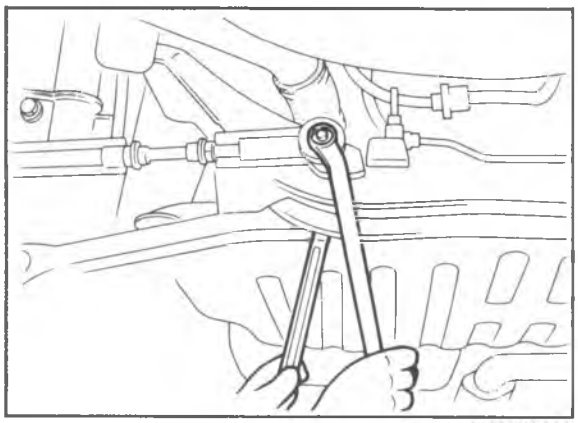

86U13X-066

Removal Note
Lateral links

1. Loosen the crossmember mounting bolts and allow crossmember to drop down for clearance.
2. Remove the lateral links.

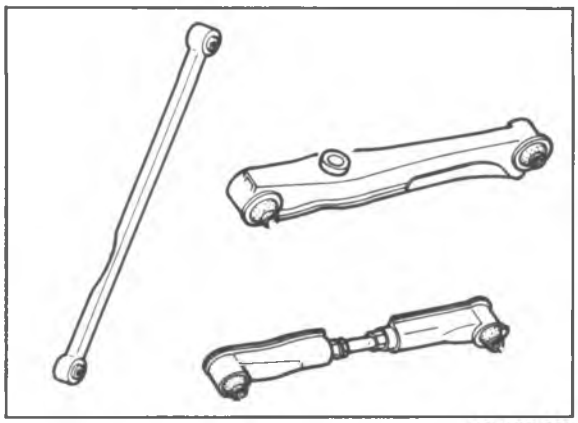

86U13X-067

Inspection Note
Check the following and repair or replace any faulty parts.

1. Deformed or cracked lateral link and trailing link
2. Damaged or worn bushings

Note
If it is necessary to replace the bushing, replace the lateral link or trailing link assembly.

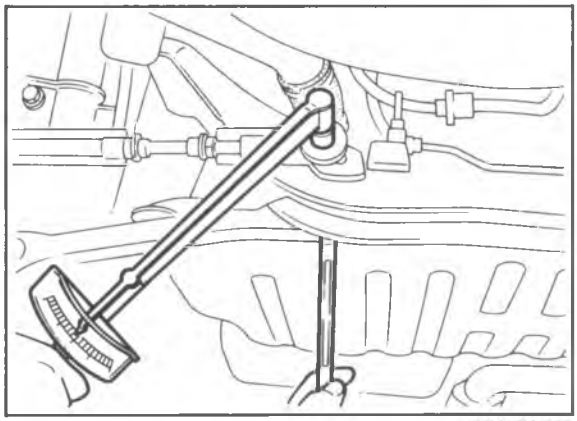

86U13X-068

Installation Note
Lateral links
Loosely tighten the mounting bolts of each link, and lower the vehicle from the safety stands. Adjust the toe-in, and then tighten the bolts with the vehicle unloaded.

Tightening torque: 86—117 N·m (8.8—11.9 m-kg, 64—86 ft-lb)

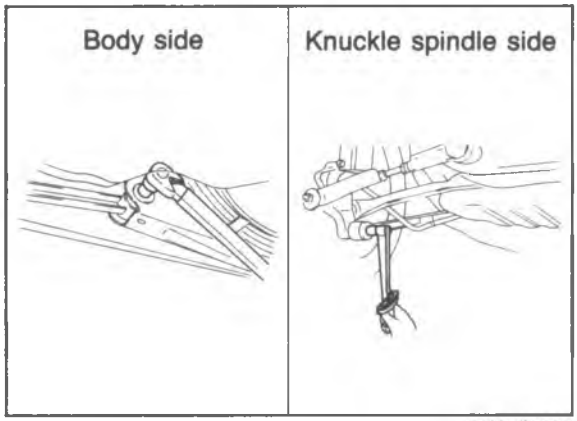

86U13X-069

Trailing link

1. Loosely tighten the mounting bolt and nut.
2. Lower the vehicle from the safety stands.
3. Tighten the bolt and nut with the vehicle unloaded.

Tightening torque:
Body side 63—93 N·m (6.4—9.5 m-kg, 46—69 ft-lb)
Knuckle spindle side 86—117 N·m (8.8—11.9 m-kg, 64—86 ft-lb)

REAR LOWER ARM AND TRAILING LINK (4WS)

REMOVAL AND INSTALLATION

1. Jack up the front of the vehicle and support it with safety stands.
2. Remove in the sequence shown in the figure.
3. Inspect all components and parts, referring to inspection note.
4. Install in the reverse order of removal referring to the installation note for the specially marked parts.
5. Tighten all nuts and bolts to the specified torque, referring to the figure.

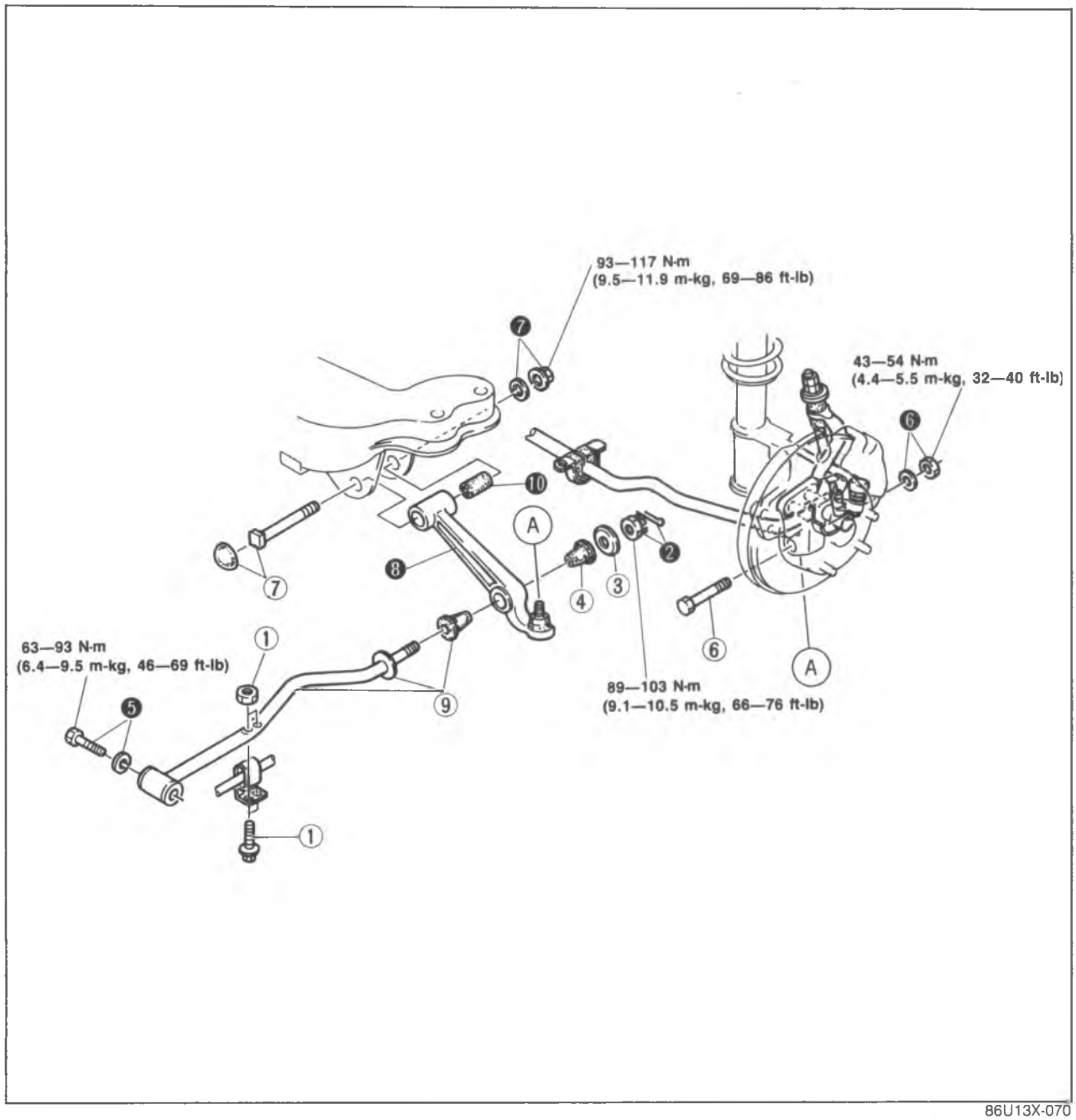

86U13X-070

1. Bolt and nut
2. Cotter pin and nut
3. Retainer
4. Bushing
5. Bolt
6. Bolt and nut
7. Bolt and nut
8. Lower arm
9. Trailing link, retainer, and bushing
10. Bushing

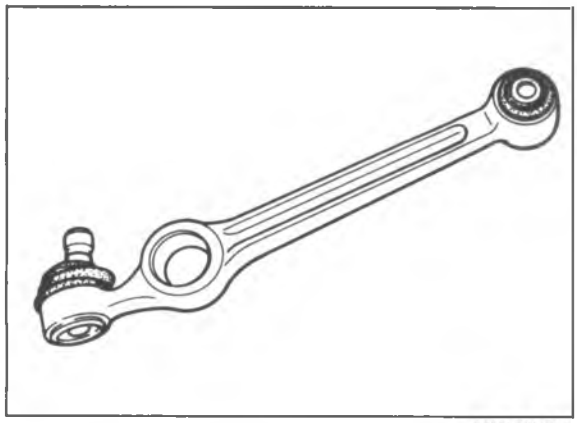

86U13X-071

Inspection Note
Check the following and repair or replace any faulty parts.
1. Deformation or cracks in lower arm and trailing link
2. Deformation or wear of bushing
3. Rotation torque of ball joint

Note
It it is necessary to replace the ball joint, replace the lower arm assembly.

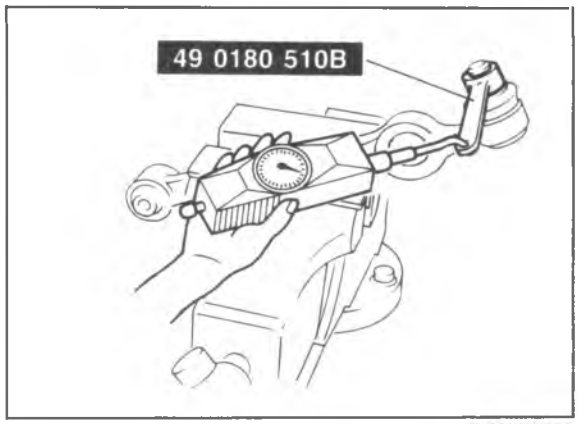

86U13X-072

Measurement of ball joint rotation torque
Connect the **SST** to the ball stud, then measure by using a pull scale.

Rotation torque: 1.8—3.1 N·m
(18—31 cm-kg, 15.6—26.9 in-lb)
pull scale reading: 18—30 N
(1.8—3.1 kg, 3.9—6.8 lb)

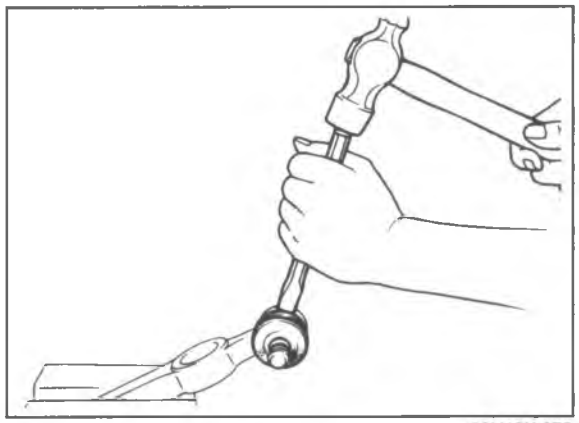

86U13X-073

Dust boot

Removal
Use a chisel to remove the dust boot.

Caution
Do not damage the ball joint.

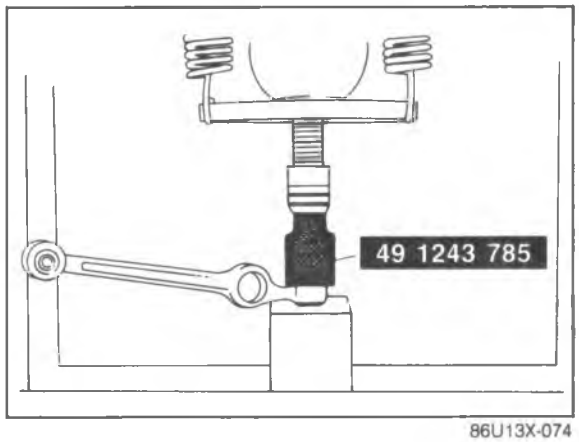

86U13X-074

Installation
Apply lithium grease to the inside of the new dust boot, then install it by with the **SST**.

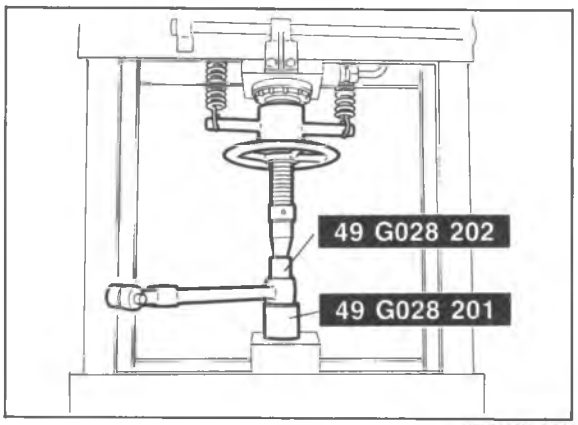

86U13X-075

Lower arm bushing
Removal
Use the **SST** as shown in the figure, and remove the bushing.

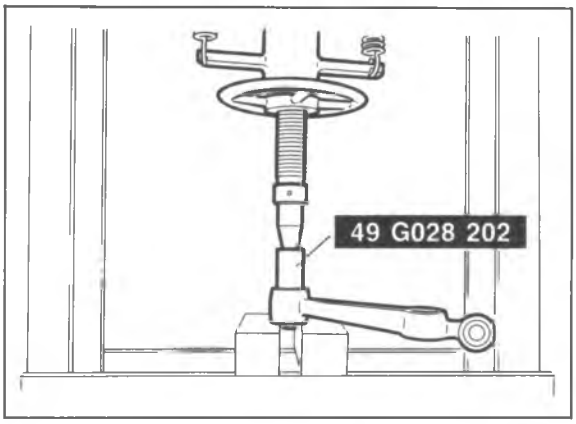

86U13X-076

Installation
Apply soapy water to the bushing and press it into the lower arm with the **SST**.

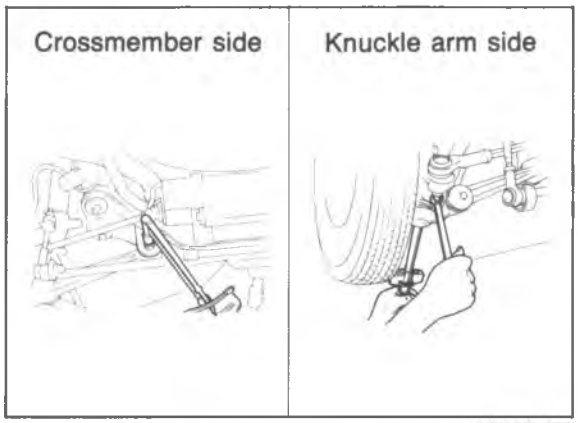

86U13X-077

Installation Note
Lower arm
Tighten the lower arm to the crossmember and knuckle arm.

Tightening torque:
Crossmember side 93—117 N·m
(9.5—11.9 m-kg, 69—86 ft-lb)
Knuckle arm side 43—54 N·m
(4.4—5.5 m-kg, 32—40 ft-lb)

Caution
Lower the vehicle and check the torque with the vehicle unloaded.

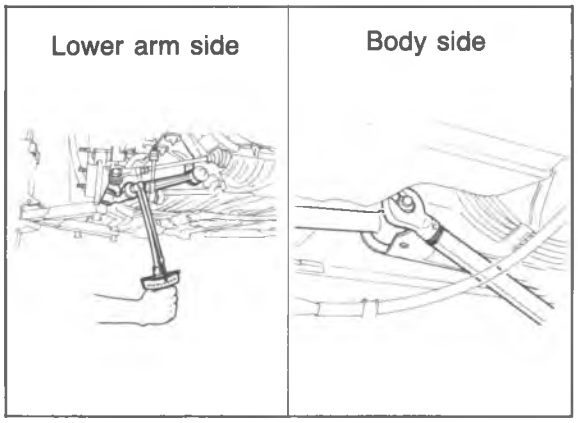

86U13X-078

Trailing link
Tighten the trailing link to the body and lower arm.

Tightening torque:
Body side 63—93 N·m
(6.4—9.5 m-kg, 46—69 ft-lb)
Lower arm side 89—103 N·m
(9.1—10.5 m-kg, 66—76 ft-lb)

Caution
a) Lower the vehicle and check the torque with the vehicle unloaded.
b) If the cotter pin was removed, replace it with a new one.

REAR STABILIZER

REMOVAL AND INSTALLATION

1. Jack up the front of the vehicle and support it with safety stands.
2. Remove in the sequence shown in the figure.
3. Inspect all components and parts, referring to inspection note.
4. Install in the reverse order of removal referring to the installation note for the specially marked parts.
5. Tighten all nuts and bolts to the specified torque, referring to the figure.

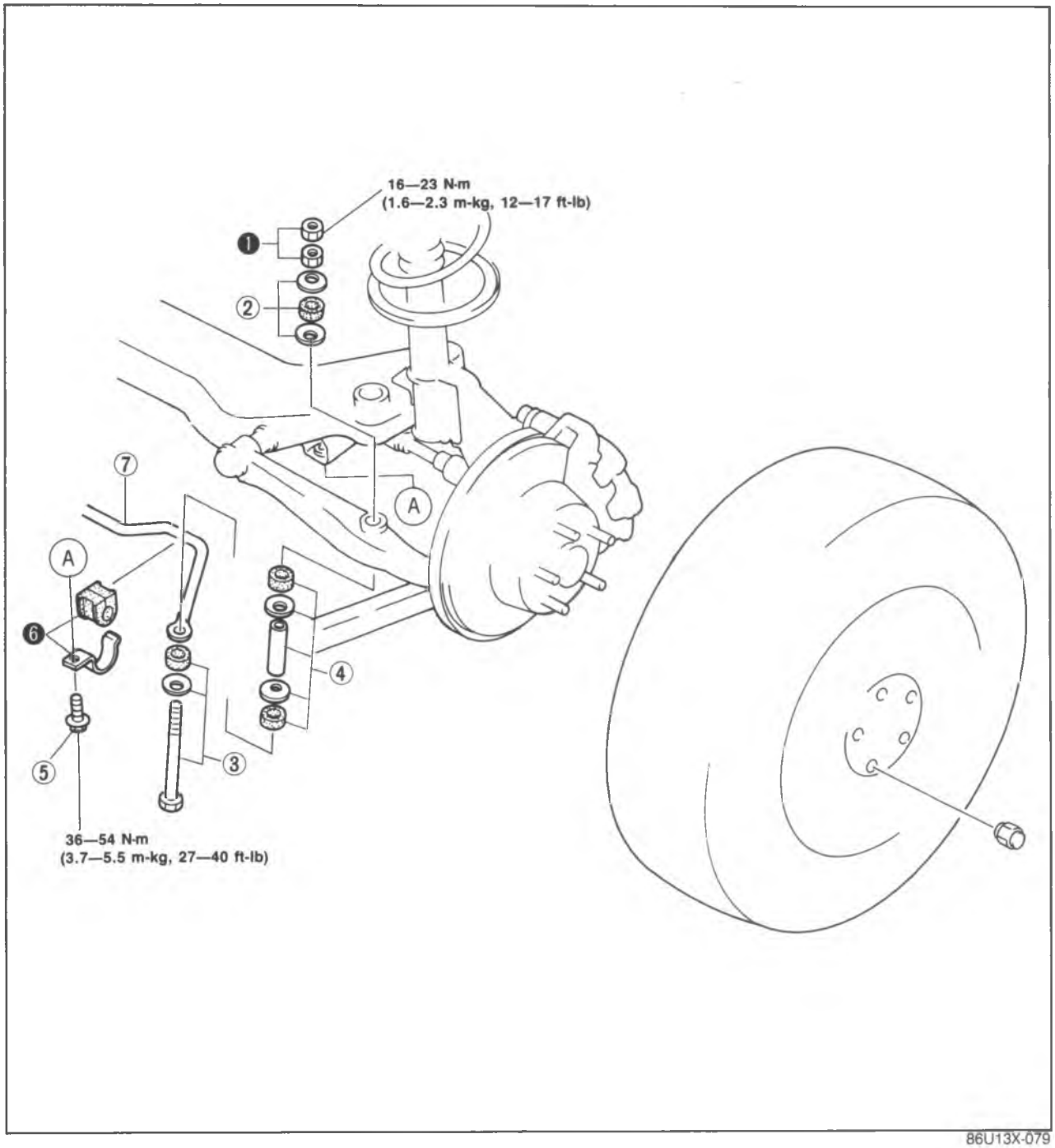

86U13X-079

1. Nuts
2. Bushing and retainer
3. Retainer, bushing, and bolt
4. Retainer, bushing, and spacer
5. Bolt
6. Bushing and bracket
7. Stabilizer

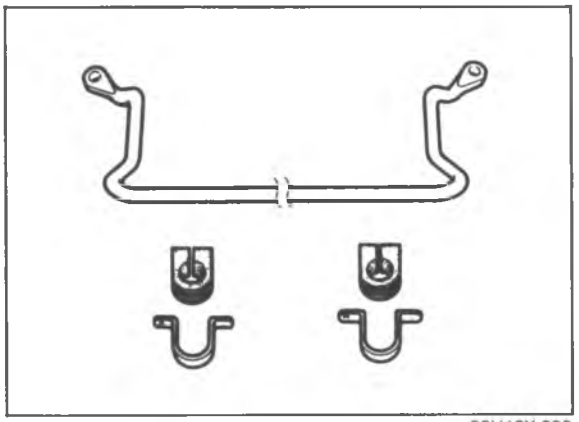

86U13X-080

Inspection Note

Check the following and replace or repair any faulty parts.

1. Stabilizer for bending or damage
2. Stabilizer bushings for deterioration or wear
3. Retainers and spacers for bending or damage
4. Mounting bushings for deterioration or wear
5. Bolts for bending or damage

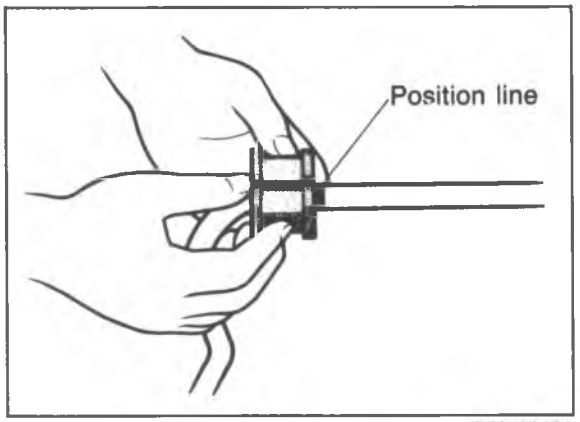

86U13X-081

Installation Note

Stabilizer bushing and bracket

1. Install the bushing on the stabilizer.
2. Align the bushing with the stabilizer installation position line.
3. Install the stabilizer bracket and loosely tighten the bolts.
4. Install the stabilizer link to the lower arm.
5. Install the retainers, rubber bushings and nuts.
6. Lower the vehicle, then tighten the bracket bolts with the vehicle unloaded.

   Tightening torque: 36—54 N·m (3.7—5.5 m-kg, 27—40 ft-lb)

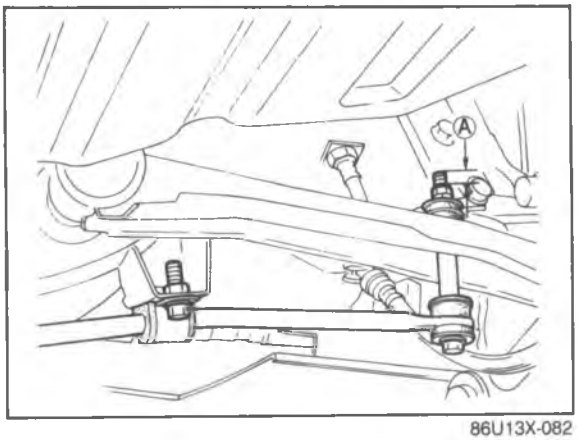

86U13X-082

7. Tighten the link nut so that there is **10.4 mm (0.41 in)** of thread (A) exposed.

REAR STABILIZER AND CONTROL LINK (4WS)

REMOVAL AND INSTALLATION

1. Jack up the front of the vehicle and support it with safety stands.
2. Remove in the sequence shown in the figure referring to the removal note for the specially marked parts.
3. Inspect all components and parts, referring to inspection note.
4. Install in the reverse order of removal referring to the installation note for the specially marked parts.
5. Tighten all nuts and bolts to the specified, referring to the figure.

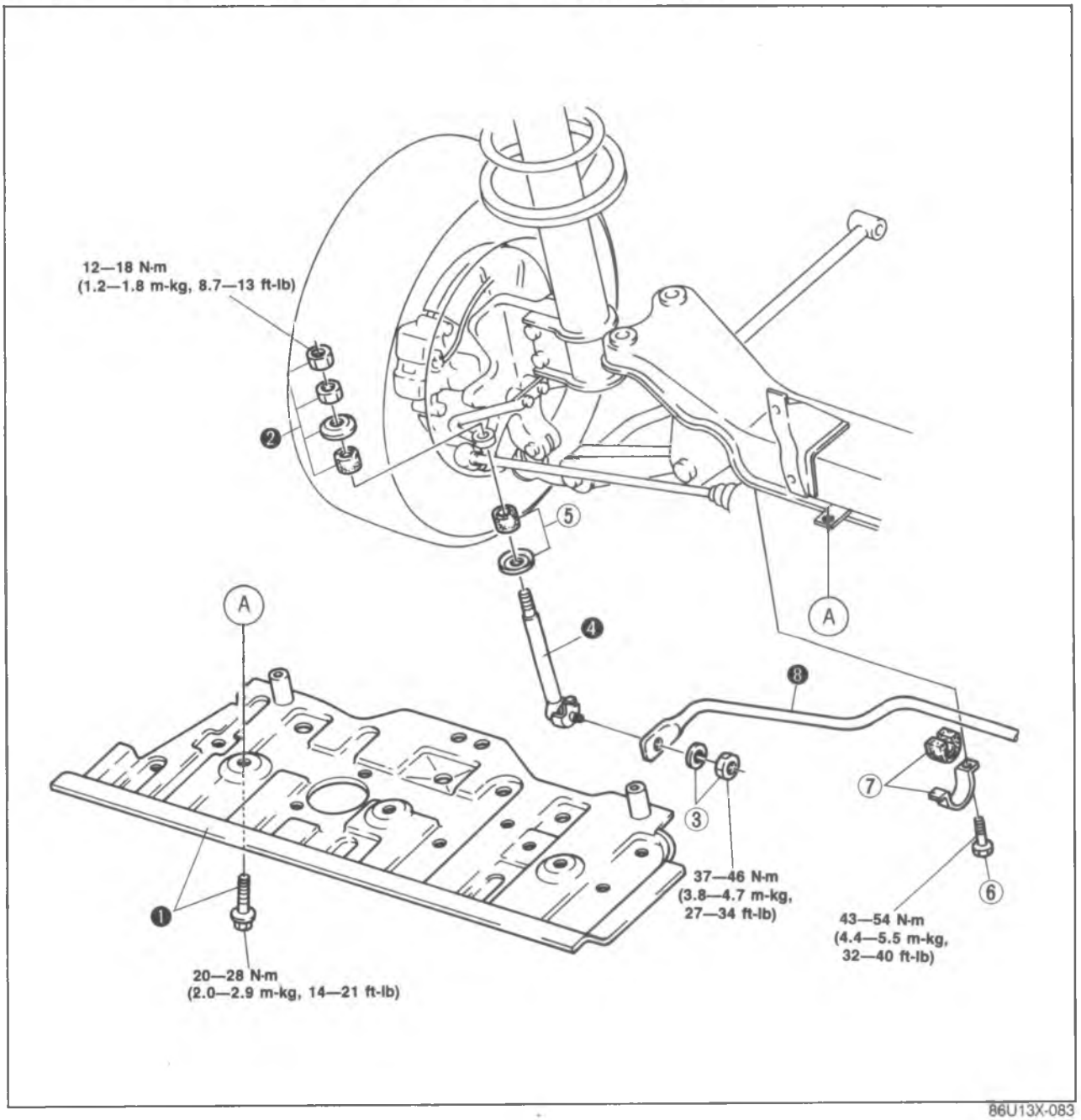

86U13X-083

1. Rear steering cover and bolts
2. Nut, bushing, and retainer
3. Nut
4. Control link assembly
5. Bushing and retainer
6. Bolt
7. Bushing and bracket
8. Rear stabilizer

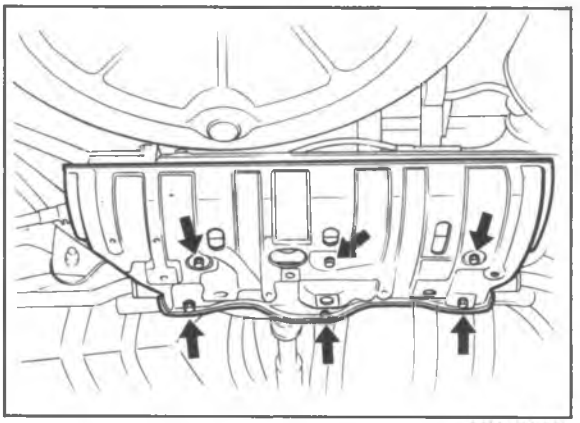

86U13X-084

Removal Note

1. Remove the rear steering cover bolts.

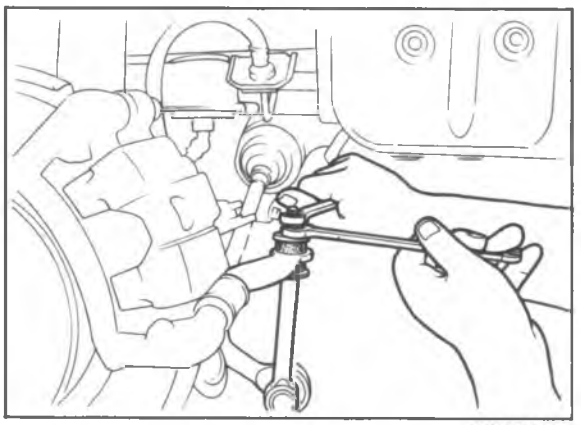

86U13X-085

2. Remove the stabilizer bar control link.

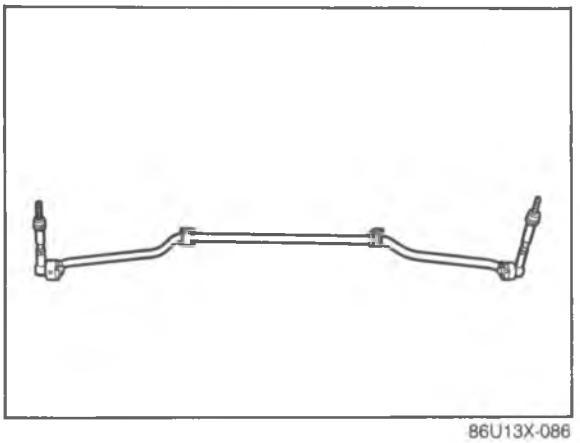

86U13X-086

Inspection Note

Check the following and repair or replace any faulty parts.

1. Worn or deteriorated rubber bushing
2. Bent, deteriorated, or damaged stabilizer

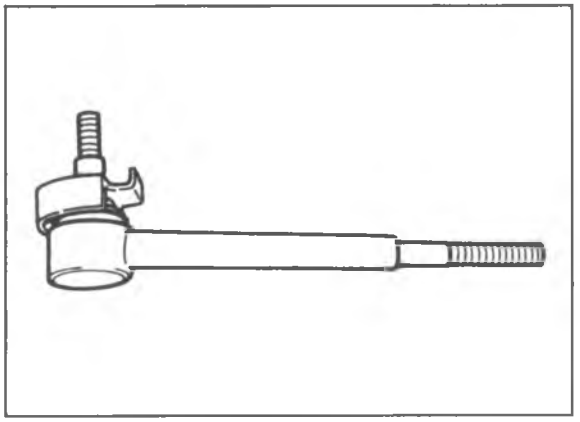

86U13X-087

3. Damaged control link
4. Damaged control link dust boot
5. Worn or deteriorated bushing

Note

If it is necessary to replace the ball joint, replace the control link assembly.

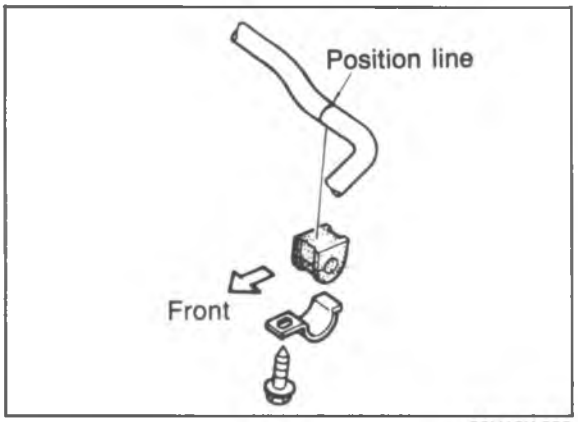

86U13X-088

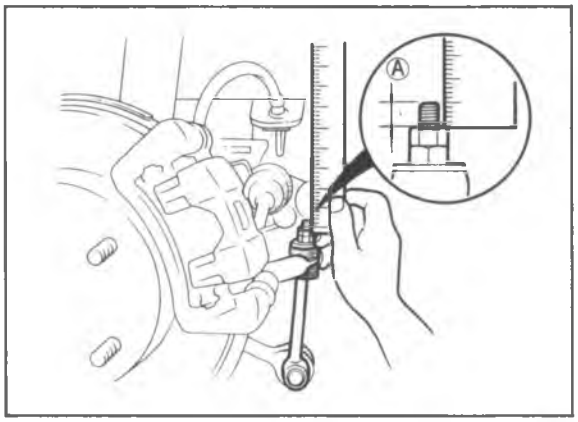

86U13X-089

Stabilizer bushing installation
Align the bushing with the stabilizer installation Position line, and attach it so that the seam faces the front of the vehicle.

Caution
Mount the brackets of the stabilizer first and loosely tighten them. After mounting the control links, tighten the brackets to the specified torque with the vehicle on the ground and unloaded.

Tightening torque: 43—54 N·m (4.4—5.5 m-kg, 32—40 ft-lb)

Tighten the link nut so that there is **13 mm (0.51 in)** of thread (A) exposed.

REAR CROSSMEMBER (4WS)

REMOVAL AND INSTALLATION

1. Jack up the front of the vehicle and support it with safety stands.
2. Remove in the sequence shown in the figure referring to the removal note for the specially marked parts.
3. Inspect all components and parts. referring to inspection note.
4. Install in the reverse order of removal referring to the installation note for the specially marked parts.
5. Tighten all nuts and bolts to the specified torque, referring to the page 13—45.

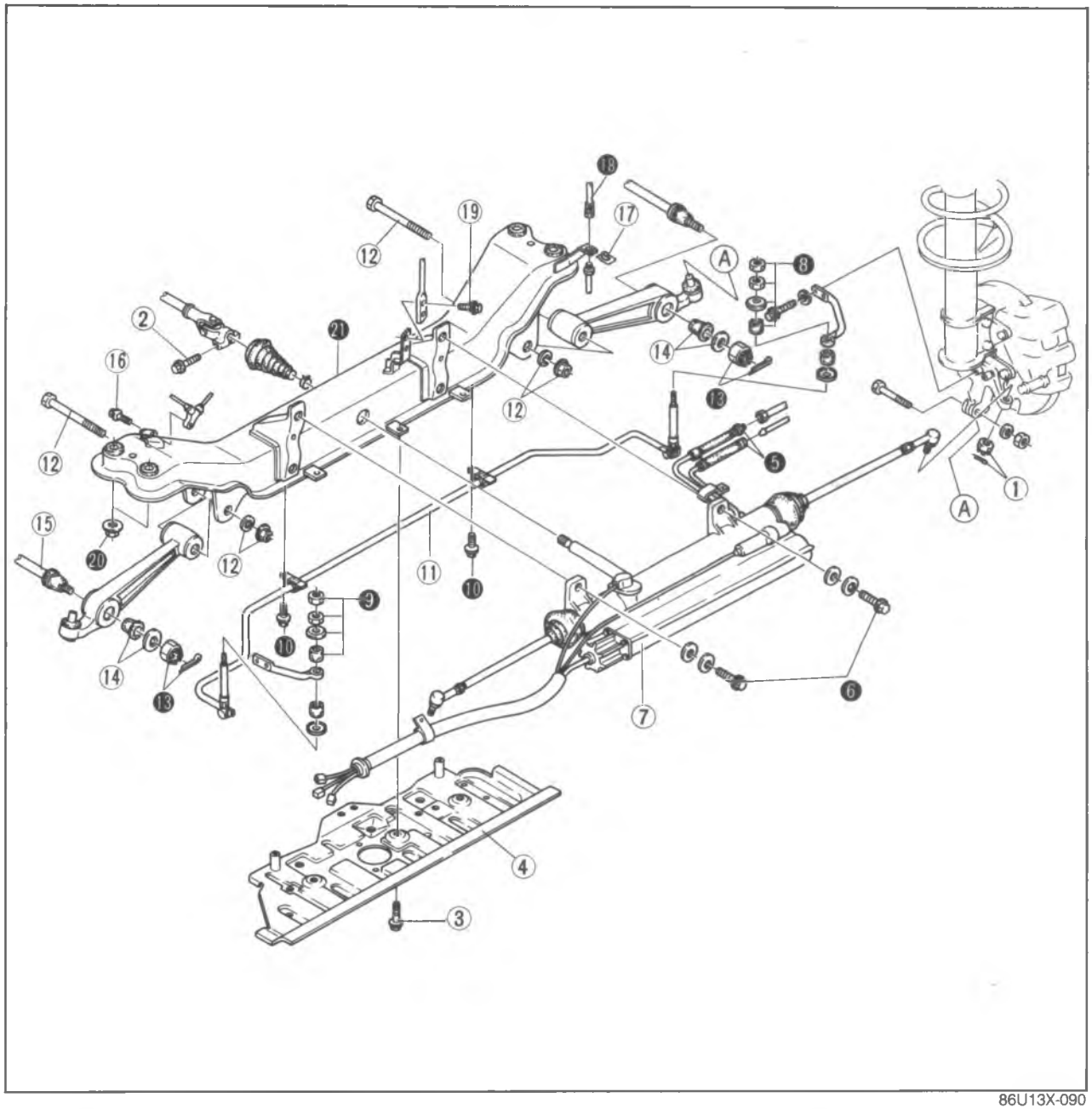

86U13X-090

1. Cotter pin and nut
2. Bolt
3. Bolt
4. Cover
5. Oil hose and pipe
6. Bolts
7. Rear steering assembly
8. Nut, retainer, and bushing
9. Nut, retainer, and bushing
10. Bolts
11. Stabilizer
12. Nuts and bolts
13. Cotter pin and nut
14. Bushing and retainer
15. Trailing link
16. Bolt
17. Clip
18. Brake pipe
19. Bolt
20. Nut
21. Crossmember

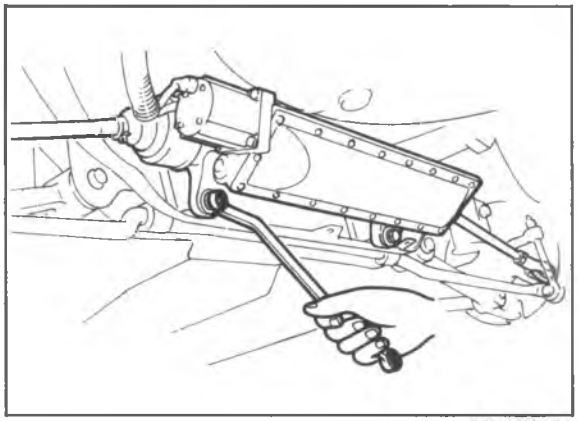

86U13X-091

Removal Note
Rear steering control system
Remove the rear steering. (Refer to Section 10)

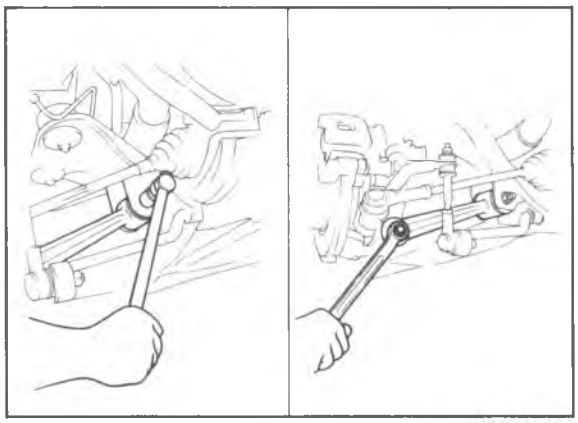

86U13X-092

Lower arm and trailing link
1. Remove the lower arm from the crossmember.
2. Remove the trailing link from the lower arm and body.

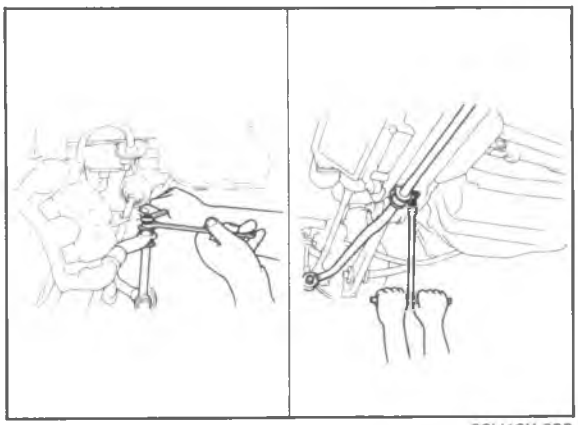

86U13X-093

Stabilizer and control link
Remove the stabilizer bar control link.

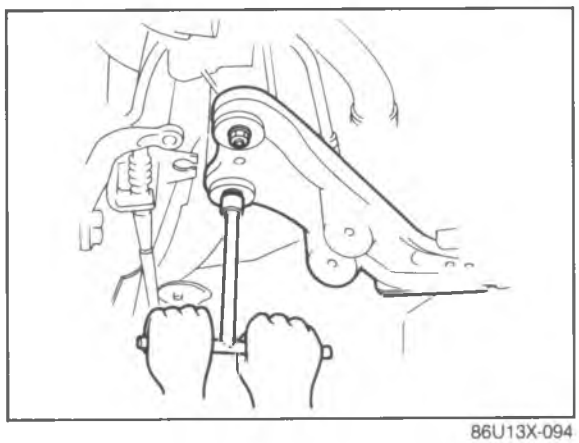

86U13X-094

Crossmember
Remove the crossmember from the body.

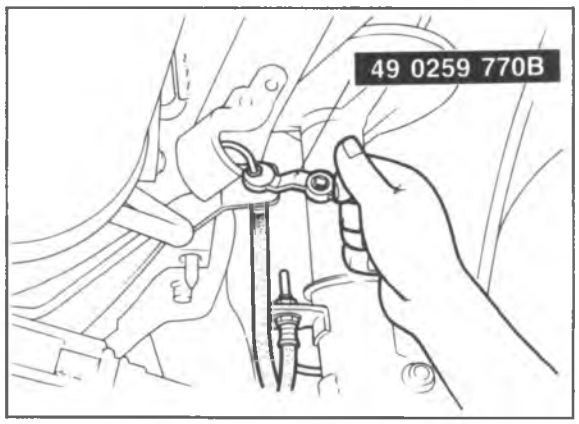

86U13X-095

Brake lines

1. When disconnecting the flexible hose and brake line, remove the clip after first loosening the flare nut.
2. When connecting the flexible hose, do not tighten too tight or twist.
3. Air bleed the brake system. (Refer to Section 11)

Caution
Do not allow brake fluid to get on painted surfaces. If it does, wipe it off immediately.

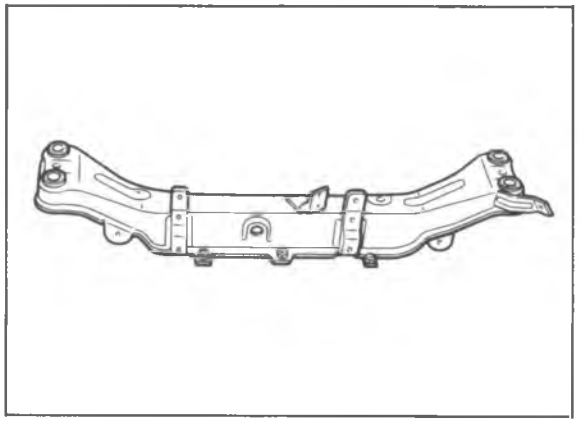
86U13X-096

Inspection Note

Check the following and repair or replace any faulty parts.

1. Crossmember for bending or damage
2. Crossmember mounts for deterioration or wear

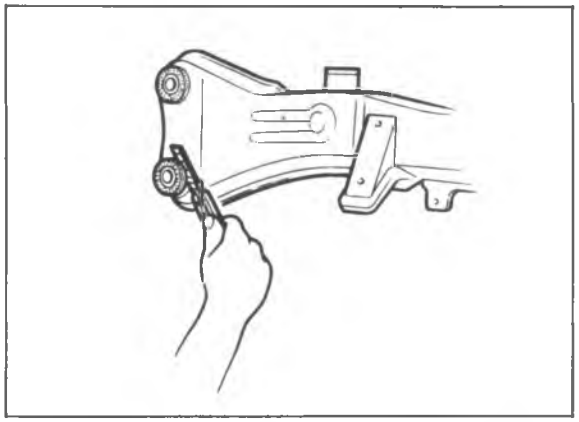
86U13X-097

Crossmember bushing
Removal

1. Cut away the projecting rubber of the crossmember bushing.

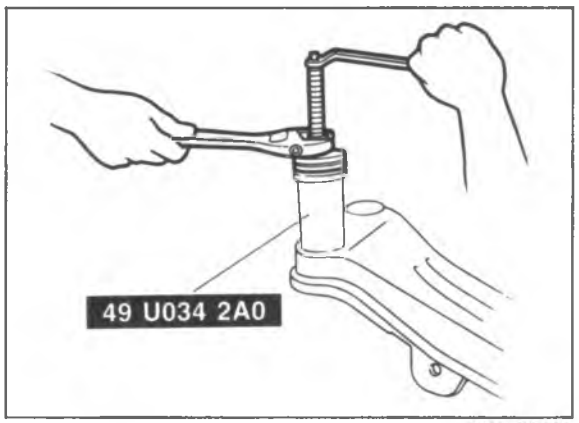

86U13X-098

2. Remove the bushing from the crossmember with the **SST**.

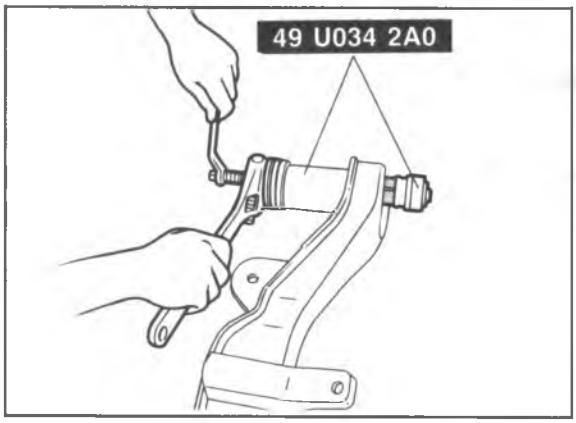

86U13X-099

Installation
Apply soapy water to the bushing, then press it into the crossmember with the **SST**.

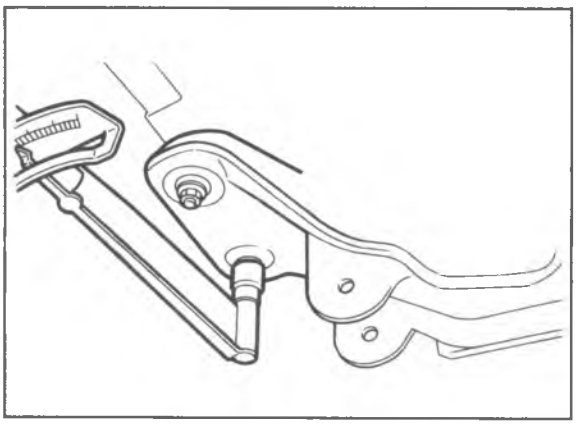
86U13X-100

Installation Note
1. Mount the crossmember to the body, and loosely tighten the nuts.

Caution
Lower the vehicle then tighten the nuts to the specified torque with the vehicle unloaded.

Tightening torque: 93—117 N·m (9.5—11.9 m-kg, 69—86 ft-lb)

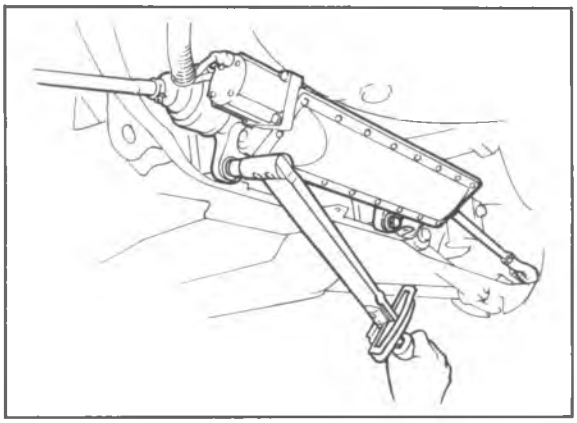
86U13X-101

2. Mount the rear steering to the crossmember, and tighten the bolts. (Refer to Section 10)

Tightening torque: 31—46 N·m (3.2—4.7 m-kg, 24—34 ft-lb)

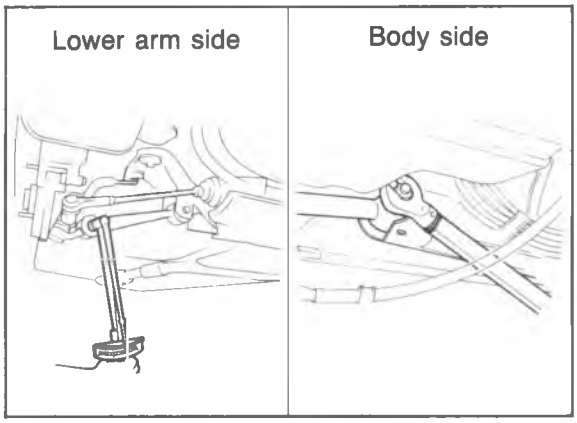

86U13X-102

3. Install the lower arm to the crossmember.
4. Install the trailing link to the lower arm and body.

Caution
Lower the vehicle then tighten the bolts to the specified torque with the vehicle unloaded.

Tightening torque:
Lower arm side 89—103 N·m (9.1—10.5 m-kg, 66—76 ft-lb)
Body side 63—93 N·m (6.4—9.5 m-kg, 46—69 ft-lb)

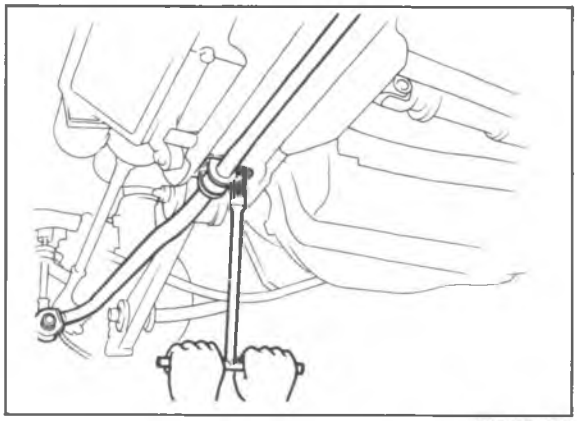

86U13X-103

5. Install the stabilizer bushings and brackets.

Tightening torque: 43—54 N·m (4.4—5.5 m-kg, 32—40 ft-lb)

Caution
Lower the vehicle and check the torque with the vehicle unloaded.

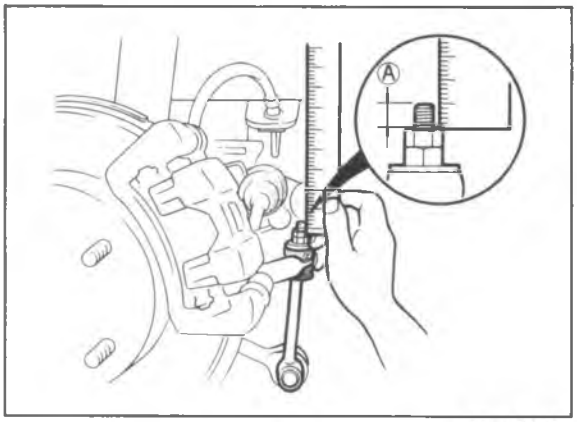

86U13X-104

6. Install the stabilizer control link.
Tighten the link nuts so that there is **13 mm (0.51 in)** of thread (A) exposed.

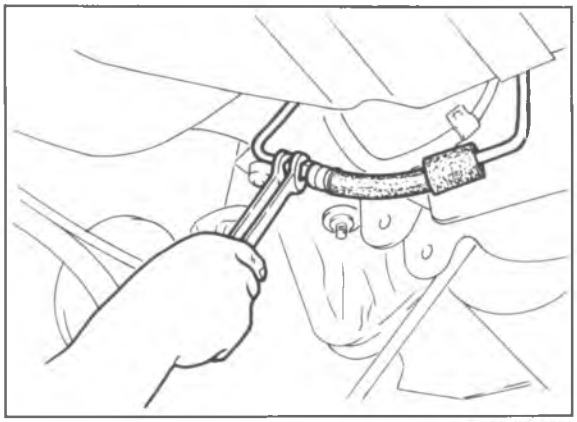

86U13X-105

7. Install the rear steering pipe and hose.

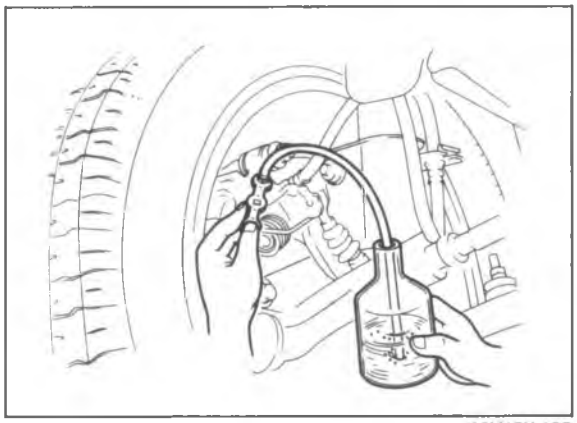

86U13X-106

8. Air bleed the brake system. (Refer to Section 11)

Tightening torque

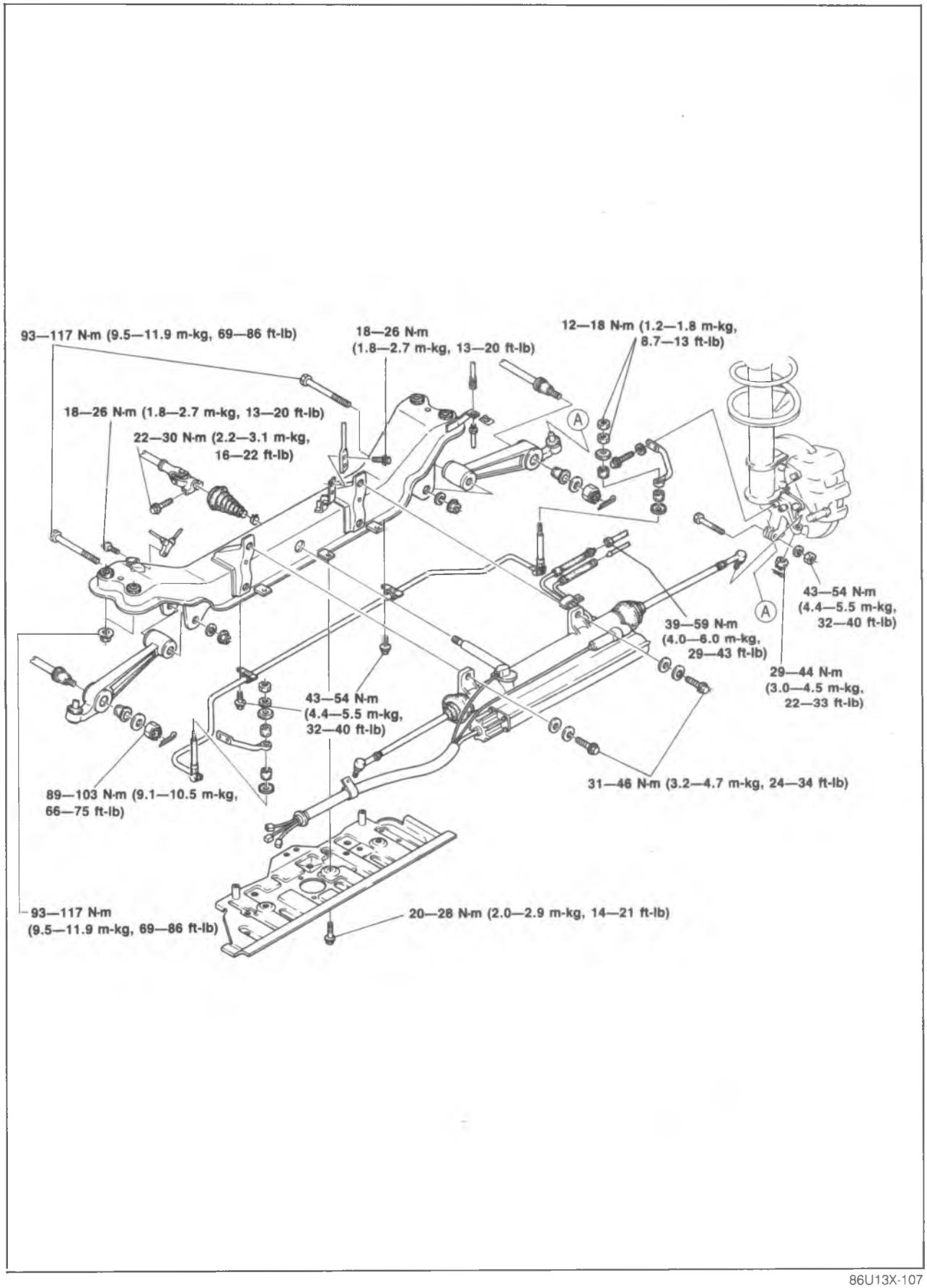

86U13X-107

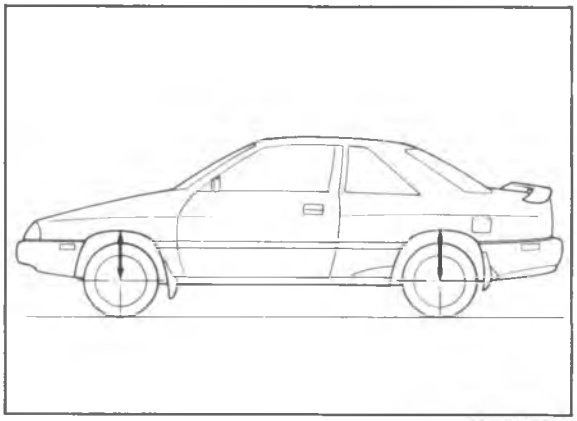

86U13X-108

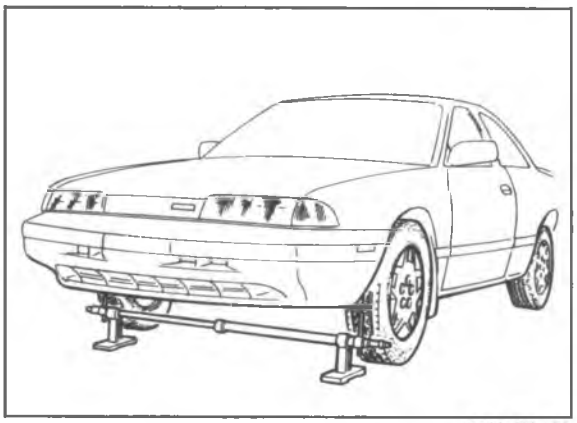

86U13X-109

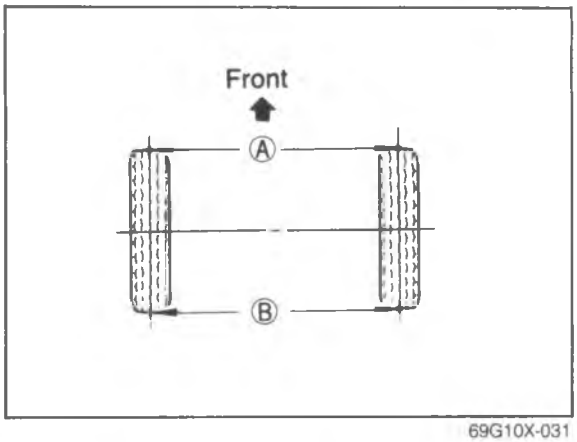

69G10X-031

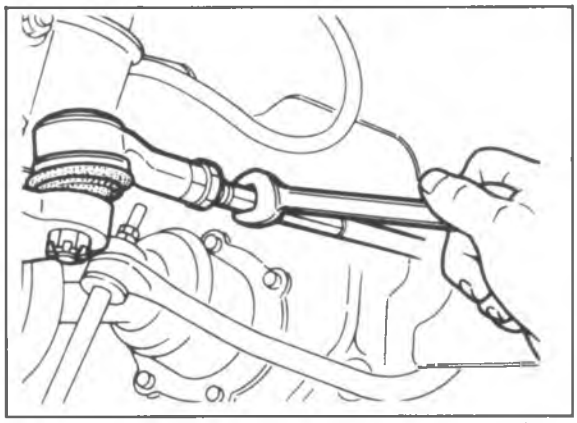

86U13X-110

FRONT WHEEL ALIGNMENT

Pre-inspection

1. Check the tire inflation and bring to the recommended pressure.
2. Inspect the front wheel bearing play and correct, it if necessary.
3. Inspect the wheel and tire runout.
4. Inspect the ball joints and steering linkage for any excessive looseness.
5. The vehicle must be on level ground and have no luggage or passenger load.
6. The difference in height between the left and right sides from the center of the wheel to the fender brim must be within **10 mm (0.39 in)**.

Caution

a) Front and rear wheel alignment should be checked simultaneously. If adjustment is made to either the front or rear wheels, recheck the alignment, particularly toe-in, on all other wheels.

b) Check and adjust the steering angle transfer shaft after adjusting the front wheel alignment. (Refer to Section 10)

TOE-IN

Inspection

1. Raise the front of the vehicle until the wheels clear the ground.
2. Turn the wheels by hand, mark a line in the center of each tire tread using a scribing block.
3. Place the front wheels in the straight-ahead position and lower the vehicle.
4. Measure the distance between the lines at the front and rear of the wheels.
   Both measurements must be taken at equal distances from the ground.

Toe-in (distance greater at rear than front): 3 ± 3 mm (0.12 ± 0.12 in)

Adjustment

To adjust the toe-in, loosen the left and right tie-rod lock nuts, then turn the tie-rods by the same amount.

Caution

a) The left and right tie-rods are both right threaded, so, to increase the toe-in, turn the right tie-rod toward the front of the vehicle, and turn the left tie-rod by the same amount toward the rear.

b) One turn of the tie-rod (both sides) changes the toe-in by about 7.2 mm (0.28 in).

c) Tighten the tie-rod lock nuts to the specified torque.

Tightening torque: 69—98 N·m (7—10 m-kg, 51—72 ft-lb)

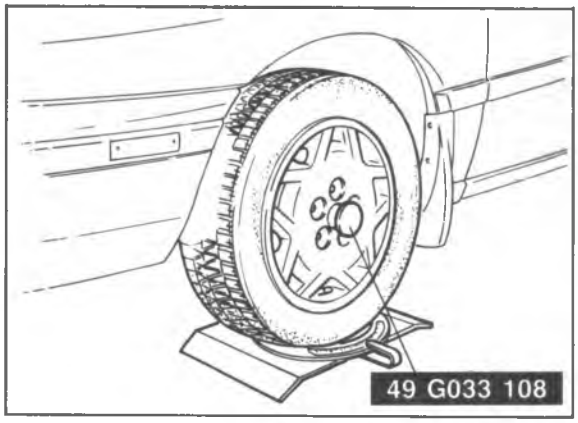

86U13X-111

CAMBER AND CASTER

Inspection

The camber and caster is measured by placing the front wheels on a turning-radius gauge in accordance with the manufacturer's instructions.

Proceed in the following order:

1. Jack up the vehicle and remove the wheel caps and nuts. Then attach the **SST** to the wheel hub as shown in the figure.

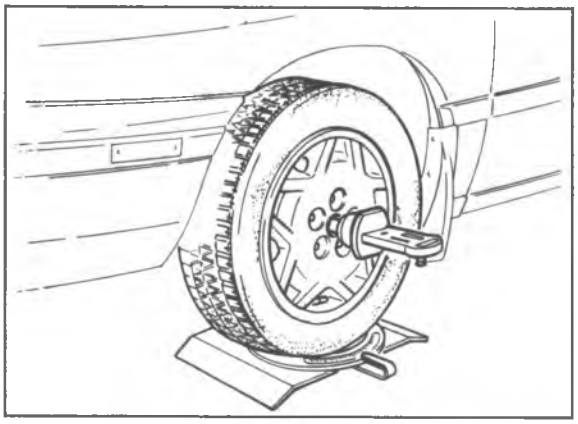

86U13X-112

2. Attach the caster/camber gauge to the adaptor and measure the camber and caster.

Camber angle: 0°17' ± 45'
Caster angle: 1°13' ± 45'

Left/right difference:
Camber: 30' max.
Caster: 40' max.

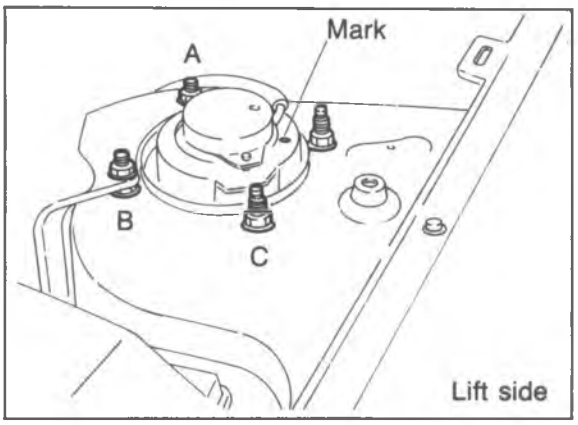

86U13X-113

Adjustment

1. Jack up the front of the vehicle and support it with safety stands.
2. Remove the mounting block nuts.
3. Push the mounting block downward, and turn it to the desired position.
4. Retighten the nuts to the specified torque.

Tightening torque: 46—63 N·m
(4.7—6.4 m-kg, 34—46 ft-lb)

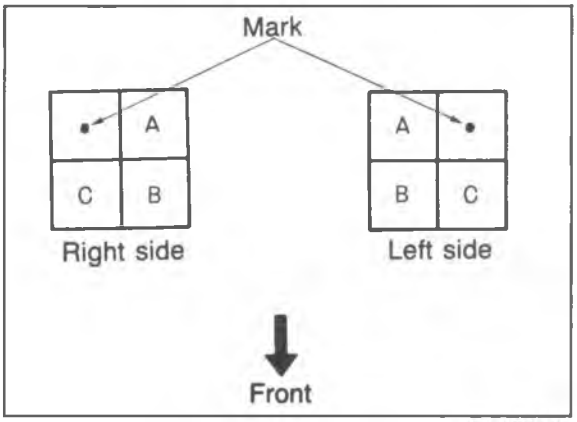

86U13X-114

Mark	Difference from standard position	
	Camber angle	Caster angle
A	27'	0°
B	27'	+28'
C	0°	+28'

Steering Angle (turning angle to left and right)

Inspection

The steering angle is measured by placing the front wheels on a turning-radius gauge.

Inward 36°00' ± 2° F2 T/C EC-AT: 34°00' ± 2°
Outward 31°00' ± 2° F2 T/C EC-AT: 29°00' ± 2°

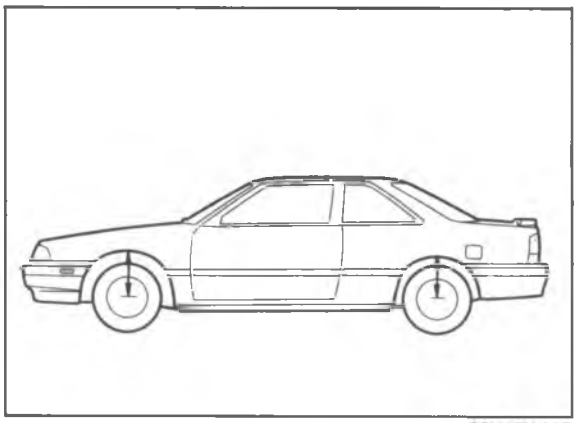

86U13X-115

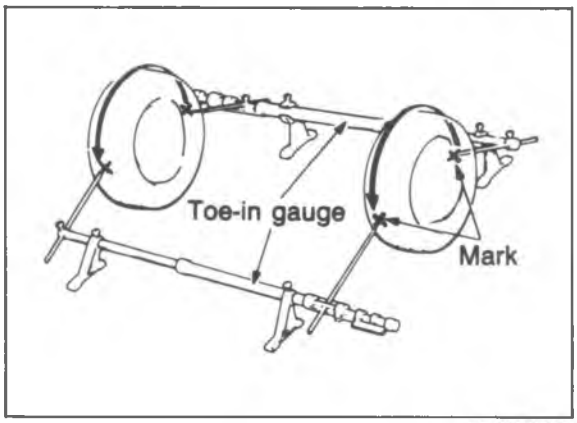

86U13X-116

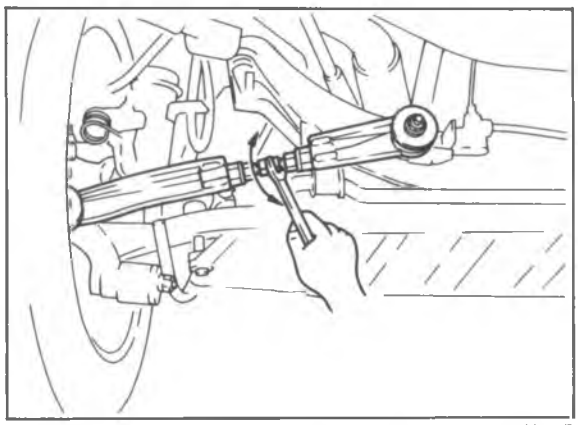

86U13X-117

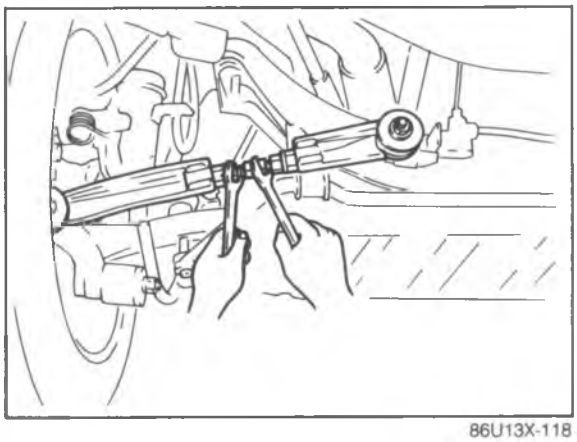

86U13X-118

REAR WHEEL ALIGNMENT

PRE-INSPECTION

1. Check the tire inflation and bring to the recommended pressure.
2. Inspect the wheel and tire runout.
3. The vehicle must be on level ground and have no luggage or passenger load.
4. Check that the suspension is correctly adjusted.
5. The difference in height between the left and right sides from the center of the wheel to the fender rim should be within **10 mm (0.39 In)**.

Caution

a) Front and rear wheel alignment should be checked simultaneously. If adjustment is made to either the front or rear wheels, recheck the alignment, particularly toe-in, on all other wheels.

b) Check and adjust the steering angle transfer shaft after adjusting the rear wheel alignment. (Refer to Section 10)

TOE-IN

Inspection

1. Raise the rear of the vehicle until the wheels clear the ground.
2. Turn the wheels by hand, mark a line in the center of each tire tread using a scribing block.
3. Lower the vehicle.
4. Measure the distance between the marked lines at the front and rear of the wheels.

Toe-in

0 ± 3 mm (0 ±0.12 in) 2WS
3 ± 3 mm (0.12 ±0.12 in) 4WS

Adjustment (2WS)

1. Loosen the adjusting rod lock nuts, then adjust the toe-in.
2. To increase the toe-in, turn the adjusting rods as follows:
   Right rod — Turn counterclockwise
   Left rod — Turn clockwise
   To decrease the toe-in, turn the adjusting rods as follows:
   Right rod — Turn clockwise
   Left rod — Turn counterclockwise

Caution

a) Both the left and right rods must be adjusted by the same amount.

b) One turn of the adjusting rod (both sides) changes the toe-in by about 11.6 mm (0.46 in).

3. Tighten the adjusting rod lock nuts to the specified torque.

Tightening torque:
55—80 N·m (5.6—8.2 m-kg, 41—59 ft-lb)

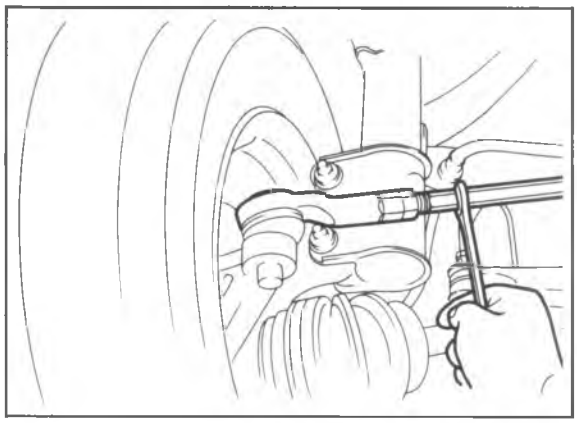

86U13X-119

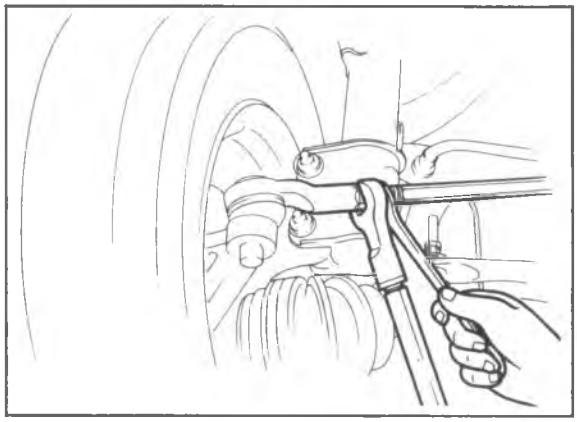

86U13X-120

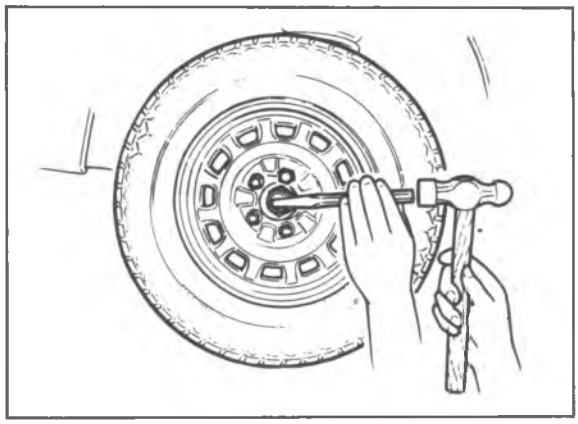

86U13X-121

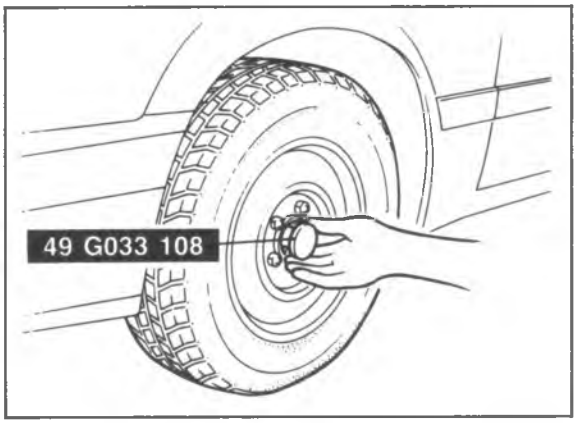

86U13X-122

Adjustment (4WS)

To adjust the toe-in, loosen the left and right tie-rod lock nuts, and turn the tie-rods by the same amount.

Caution

a) The left and right tie-rods are both right threaded, so, to increase the toe-in, turn the right tie-rod toward the front of the vehicle, and turn the left tie-rod by the same amount toward the rear.

b) One turn of the tie-rod (both sides) changes the toe-in by about 7.8 mm (0.31 in).

c) Adjust the toe-in after adjusting the steering angle.

Tighten the tie-rod lock nuts to the specified torque.

Tightening torque: 69—98 N·m (7—10 m-kg, 51—72 ft-lb)

CAMBER

Preparation

1. Remove the center caps from the wheels.
2. Uncrimp the lock nut and remove it.

Inspection

1. Install the **SST** to the driveshaft.

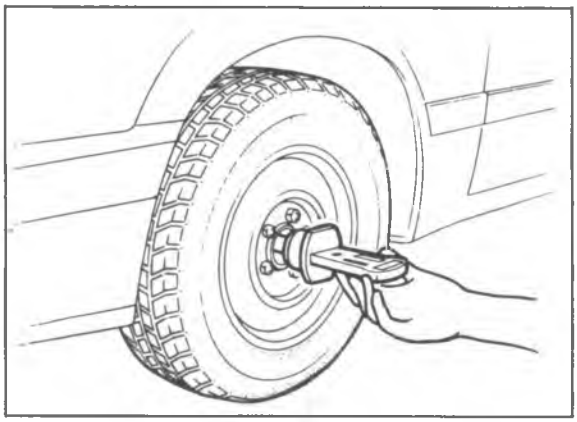

86U13X-123

2. Measure the camber angle with the caster/camber gauge.

Camber: –0°30' ± 45' (2WS)
0°00' ± 45' (4WS)

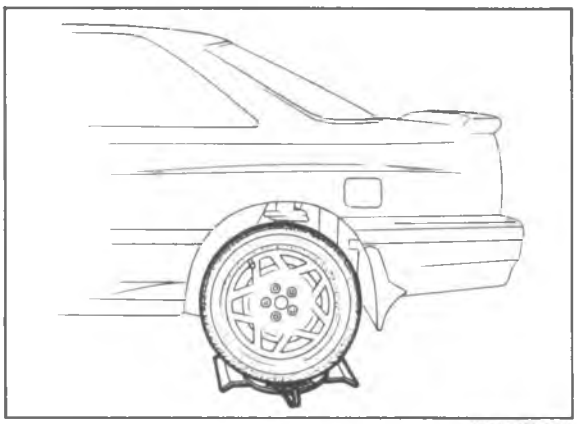

86U13X-124

REAR TURNING ANGLE (4WS)

1. Plate the rear wheels on a turning radius gauge.
2. Jack up the front of the vehicle.
3. Start the engine and let it idle.

Caution
If the engine is stopped while the steering wheel is left turned to one side or the other, the rear wheels will return to the straight-ahead direction, and, when the engine is later started once again, the direction of the rear wheels will change. Be sure, therefore, to check to be sure that the wheels are not touching, or close to, anyone's hands or feet, or any other object, when the engine is stopped or started.

4. Turn the steering wheel fully left and right, and measure the rear turning angle.

Rear turning angle Inner 5°00' ± 45'
Outer 5°00' ± 45'

5. If not within specification, adjust the rear turning angle. (Refer to Section 10)

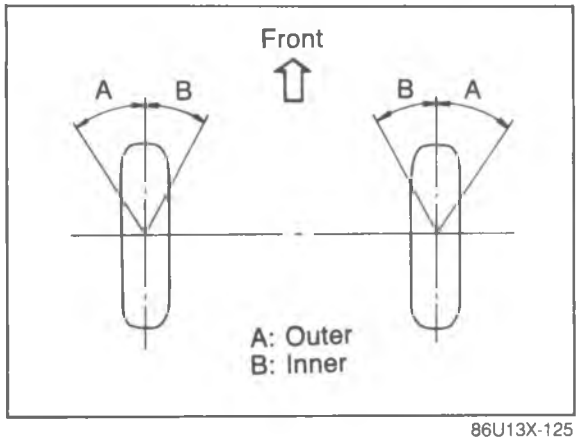

86U13X-125

BODY

HOOD ..... 14— 2
STRUCTURAL VIEW ..... 14— 2
REMOVAL ..... 14— 3
INSTALLATION ..... 14— 4
ADJUSTMENT ..... 14— 4
TRUNK LID ..... 14— 5
STRUCTURAL VIEW (SEDAN AND MX-6) ..... 14— 5
REMOVAL ..... 14— 6
INSTALLATION ..... 14— 7
ADJUSTMENT ..... 14— 8
REAR HATCH ..... 14— 9
STRUCTURAL VIEW ..... 14— 9
REMOVAL ..... 14— 10
INSTALLATION ..... 14— 12
ADJUSTMENT ..... 14— 12
FRONT DOORS ..... 14— 13
STRUCTURAL VIEW ..... 14— 13
REMOVAL ..... 14— 15
INSTALLATION ..... 14— 17
ADJUSTMENT ..... 14— 18
REAR DOORS ..... 14— 19
STRUCTURAL VIEW ..... 14— 19
REMOVAL ..... 14— 20
INSTALLATION ..... 14— 21
ADJUSTMENT ..... 14— 22
FRONT BUMPER ..... 14— 23
STRUCTURAL VIEW ..... 14— 23
REMOVAL ..... 14— 24
INSTALLATION ..... 14— 24
REAR BUMPER ..... 14— 25
STRUCTURAL VIEW ..... 14— 25
REMOVAL ..... 14— 26
INSTALLATION ..... 14— 26
RADIATOR GRILLE ..... 14— 27
REMOVAL AND INSTALLATION ..... 14— 27
HEADLIGHT AND COMBINATION LIGHT ..... 14— 28
REMOVAL AND INSTALLATION ..... 14— 28
AIMING ..... 14— 31
REAR COMBINATION LIGHTS ..... 14— 32
REMOVAL AND INSTALLATION ..... 14— 32
REPLACEMENT OF REAR COMBINATION LIGHT LENS ..... 14— 33
LICENSE PLATE LIGHT AND CARGO ROOM LIGHT ..... 14— 35
REMOVAL AND INSTALLATION ..... 14— 35
INTERIOR LIGHT AND MAP LIGHT ..... 14— 36
REMOVAL AND INSTALLATION ..... 14— 36
HIGH MOUNTED STOP LIGHT ..... 14— 37
REMOVAL AND INSTALLATION ..... 14— 37
MOLDING AND GARNISH ..... 14— 38
STRUCTURAL VIEW ..... 14— 38
WINDSHIELD MOLDING ..... 14— 39
WINDSHIELD LOWER MOLDING ..... 14— 39
DRIP MOLDING ..... 14— 39
BELT LINE MOLDING ..... 14— 39
REAR WINDOW SIDE MOLDING (SEDAN) ..... 14— 40
REAR WINDOW LOWER MOLDING (SEDAN AND MX-6) ..... 14— 40
REAR WINDOW UPPER MOLDING ..... 14— 40
HOOD MOLDING (SEDAN AND TOURING SEDAN) ..... 14— 40
QUARTER WINDOW MOLDING (MX-6) ..... 14— 41
QUARTER WINDOW MOLDING (TOURING SEDAN) ..... 14— 41
QUARTER WINDOW MOLDING (SEDAN) ..... 14— 41
REAR WINDOW SIDE MOLDING (MX-6) ..... 14— 41
TRUNK LID MOLDING (SEDAN AND TOURING SEDAN) ..... 14— 42
CENTER PILLAR GARNISH (SEDAN AND TOURING SEDAN) ..... 14— 42
REAR FINISHER (MX-6 AND SEDAN) ..... 14— 42
REAR FINISHER (TOURING SEDAN) ..... 14— 42
SAIL GARNISH ..... 14— 43
SIDE PROTECTOR MOLDING ..... 14— 43
DOOR MIRROR ..... 14— 45
DISASSEMBLY ..... 14— 45
ASSEMBLY ..... 14— 45
TRUNK-LID LOCK REMOTE RELEASE ..... 14— 46
REMOVAL AND INSTALLATION ..... 14— 46
FUEL FILLER LID REMOTE RELEASE ..... 14— 47
REMOVAL AND INSTALLATION ..... 14— 47
WINDSHIELD GLASS ..... 14— 48
STRUCTURAL VIEW ..... 14— 48
REMOVAL ..... 14— 49
INSTALLATION ..... 14— 50
REAR WINDOW GLASS ..... 14— 53
STRUCTURAL VIEW ..... 14— 53
REMOVAL ..... 14— 55
INSTALLATION ..... 14— 56
REAR HATCH GLASS ..... 14— 59
STRUCTURAL VIEW ..... 14— 59
REMOVAL ..... 14— 60
INSTALLATION ..... 14— 60
QUARTER WINDOW GLASS ..... 14— 63
STRUCTURAL VIEW ..... 14— 63
REMOVAL ..... 14— 65
INSTALLATION ..... 14— 65
HEADLINER ..... 14— 68
STRUCTURAL VIEW ..... 14— 68
REMOVAL ..... 14— 70
INSTALLATION ..... 14— 73
INSTRUMENT PANEL ..... 14— 74
STRUCTURAL VIEW ..... 14— 74
INSTALLATION VIEW ..... 14— 75
REMOVAL ..... 14— 76
INSTALLATION ..... 14— 81
SLIDING SUNROOF ..... 14— 82
STRUCTURAL VIEW ..... 14— 82
REMOVAL ..... 14— 83
INSTALLATION ..... 14— 86
WINDSHIELD WIPER ..... 14— 92
STRUCTURAL VIEW ..... 14— 92
REMOVAL ..... 14— 93
INSTALLATION ..... 14— 94
ADJUSTMENT ..... 14— 94
REAR WINDOW WIPER ..... 14— 95
STRUCTURAL VIEW (TOURING SEDAN) ..... 14— 95
REMOVAL ..... 14— 96
INSTALLATION ..... 14— 96
ADJUSTMENT ..... 14— 97
SEAT ..... 14— 98
STRUCTURAL VIEW ..... 14— 98
INSPECTION ..... 14— 99
SEAT BELTS (STANDARD SHOULDER BELT) 14—100
STRUCTURAL VIEW ..... 14—100
INSPECTION ..... 14—100
SEAT BELTS (AUTOMATIC SHOULDER BELT) 14—101
STRUCTURAL VIEW ..... 14—101
TIGHTENING TORQUE ..... 14—102
REMOVAL ..... 14—103
INSTALLATION ..... 14—103
UNDERBODY PROJECTED DIMENSIONS ..... 14—104
UNDERBODY STRAIGHT-LINE DIMENSIONS 14—106

86U14X-001

HOOD

STRUCTURAL VIEW

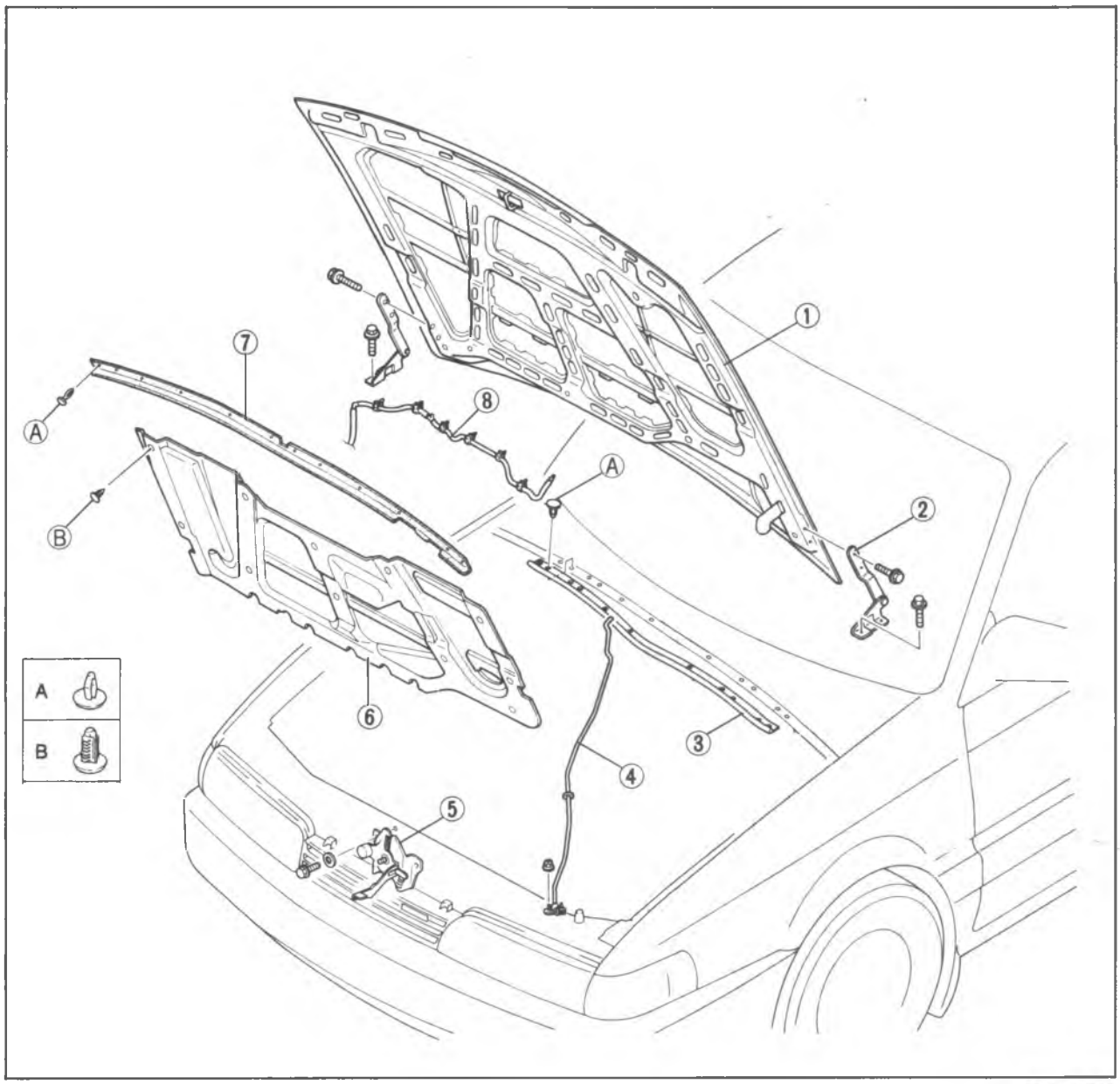

86U14X-002

1. Hood
2. Hinge
3. Cowl seal rubber
4. Hood stay
5. Hood lock
6. Hood insulator
7. Front seal rubber
8. Windshield washer hose

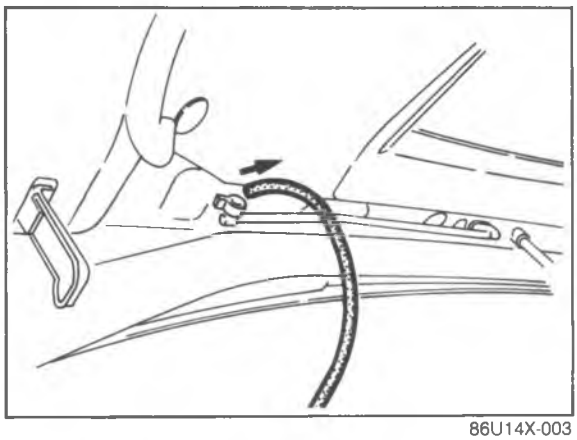

86U14X-003

REMOVAL

1. Disconnect the windshield washer hose at the joint shown in the figure.

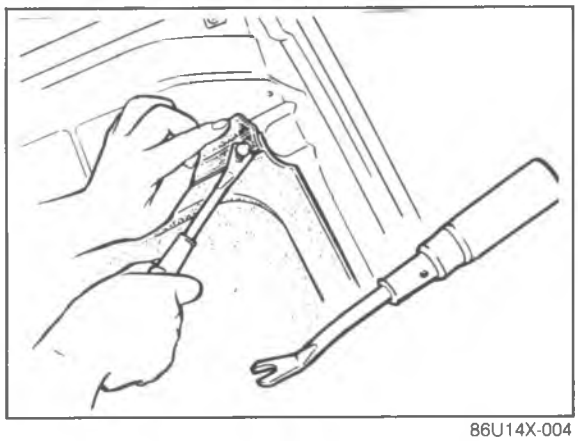

86U14X-004

2. Remove hood insulator fasteners, then remove the insulator.

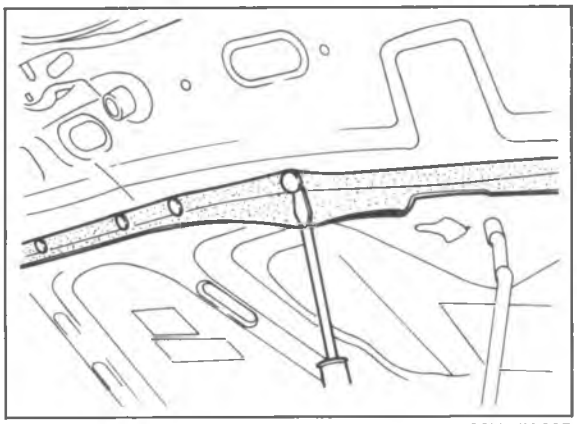

86U14X-005

3. Remove the front seal rubber fasteners, then remove the seal rubber.

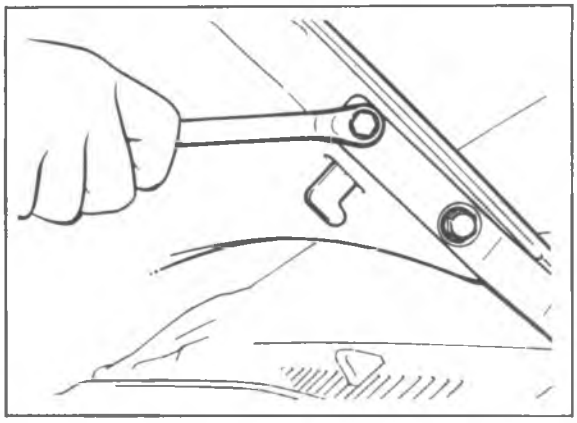

86U14X-006

4. Remove the hood hinge installation bolts, then remove the hood.

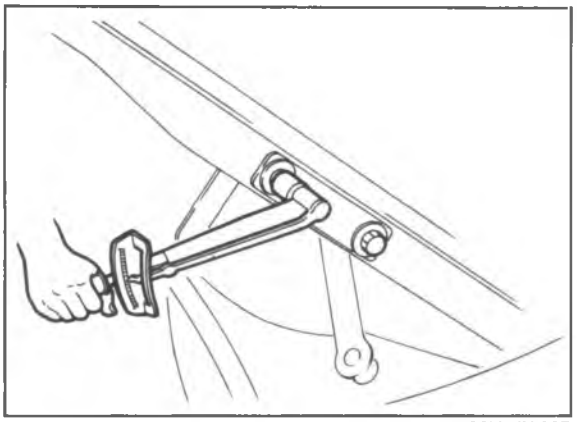

86U14X-007

INSTALLATION

Install in the reverse order of removal, noting the following:

1. Hood hinge installation bolts.

Tightening torque:
19—25 N·m (1.9—2.6 m-kg, 14—19 ft-lb)

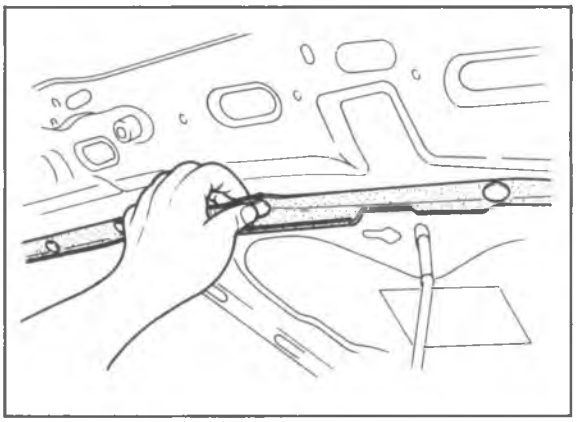

86U14X-008

2. Push the fasteners into the hood.

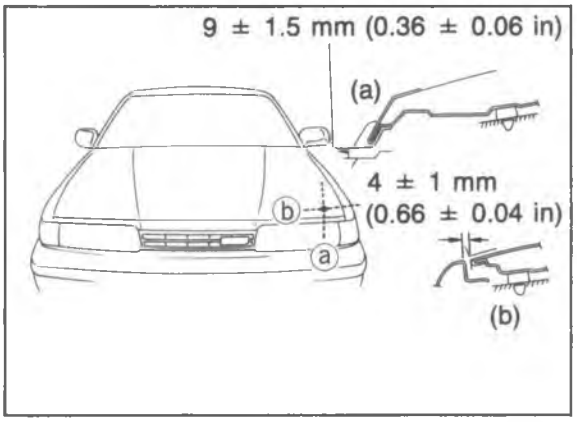

86U14X-009

ADJUSTMENT

Hood

Adjust the hood laterally and vertically by loosening the hood to hinge mounting bolts and repositioning the hood.

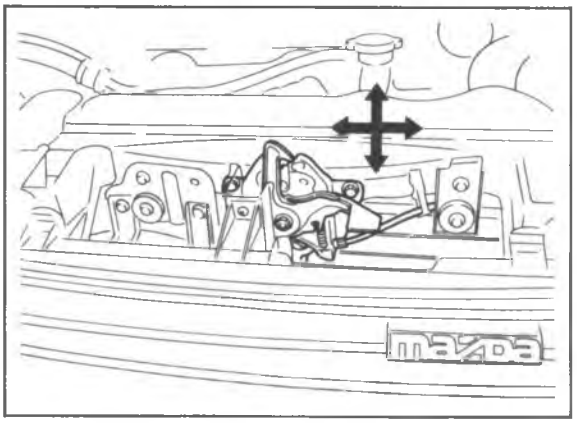

86U14X-010

Hood Lock

Adjust the hood lock after the hood has been aligned. The lock can be moved vertically and horizontally. Align it with the striker on the hood after loosening the mounting bolts.

Tightening torque:
7.8—11 N·m (0.8—1.1 m-kg, 5.8—8.0 ft-lb)

TRUNK LID

STRUCTURAL VIEW (SEDAN AND MX-6)

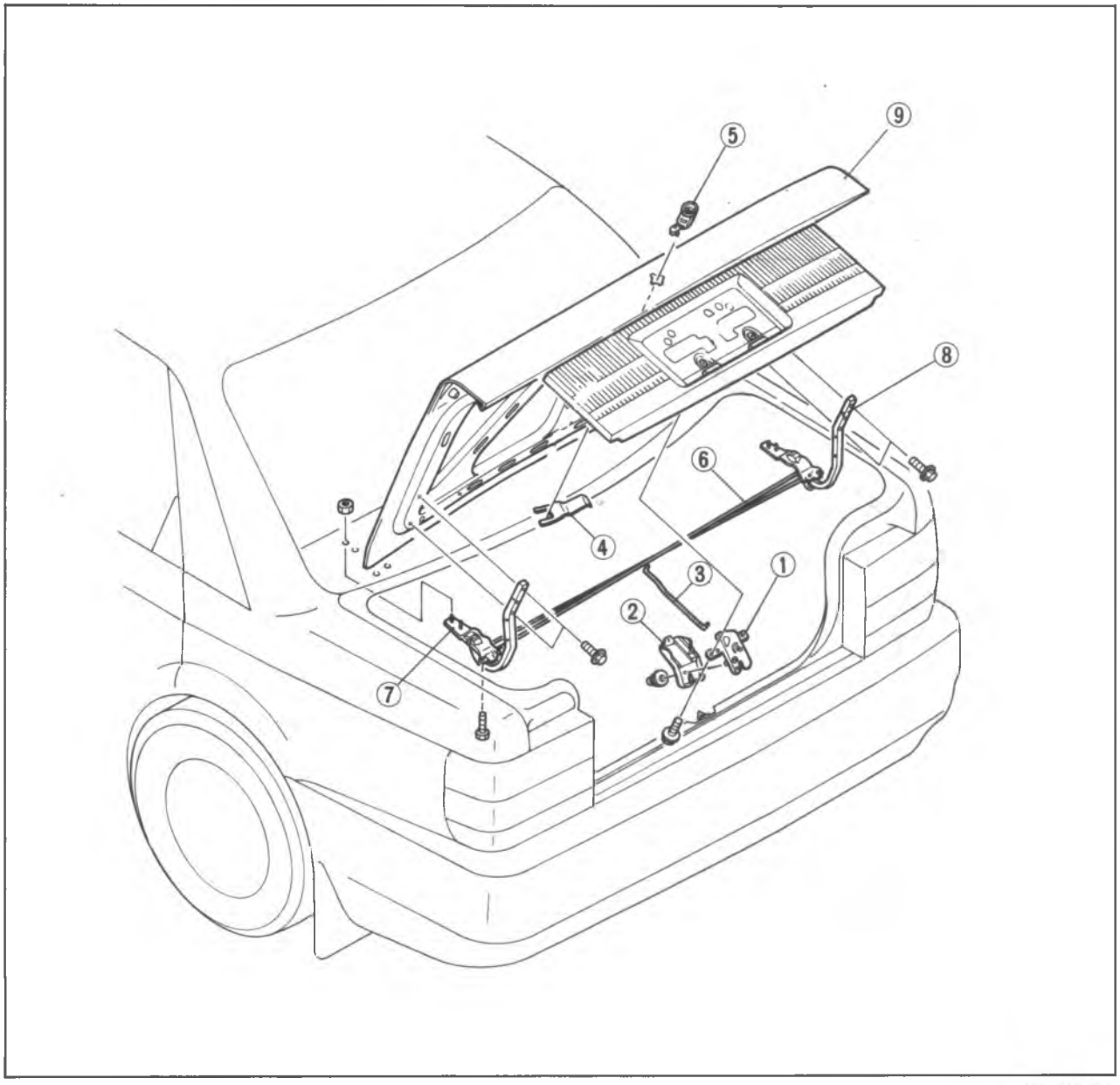

86U14X-011

1. Trunk lid lock
2. Trunk lid opener protector
3. Opening rod
4. Retainer
5. Trunk lid key cylinder
6. Balance spring
7. Trunk lid hinge bracket
8. Trunk lid hinge
9. Trunklid

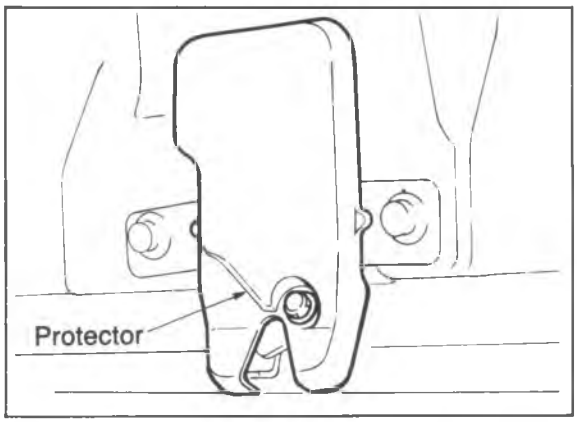

86U14X-012

REMOVAL

Trunk Lid Opener

1. Remove the nut and the protector.

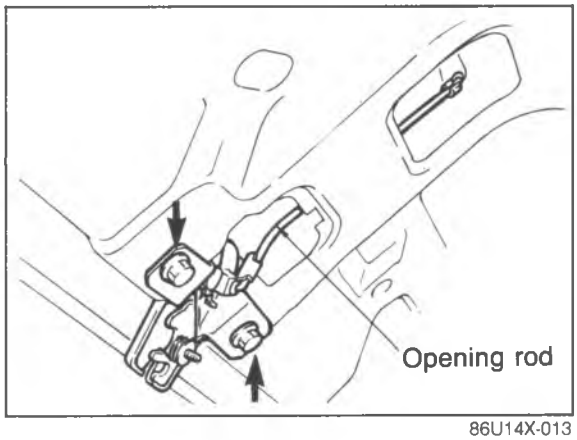

86U14X-013

2. Remove the opening rod.
3. Remove the bolts and the trunk lid opener.

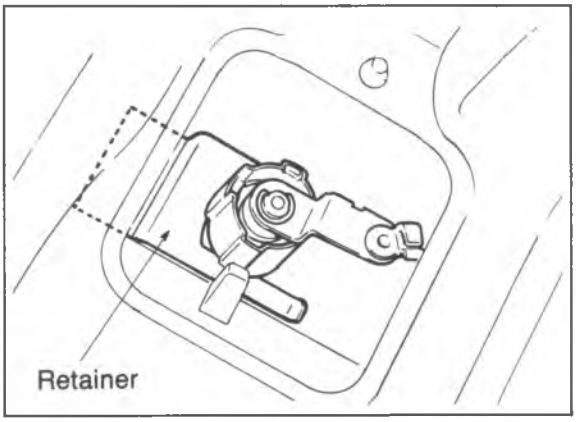

86U14X-014

Trunk Lid Key Cylinder

Remove the retainer and the trunk lid key cylinder.

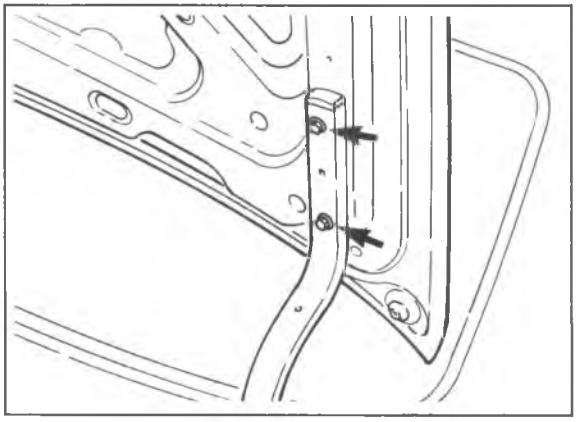

86U14X-015

Trunk Lid

1. Remove the trunk lid installation bolts, then remove the trunk lid.
2. Remove the balance spring.
3. Remove the rear seat. (Refer to page 14—99)

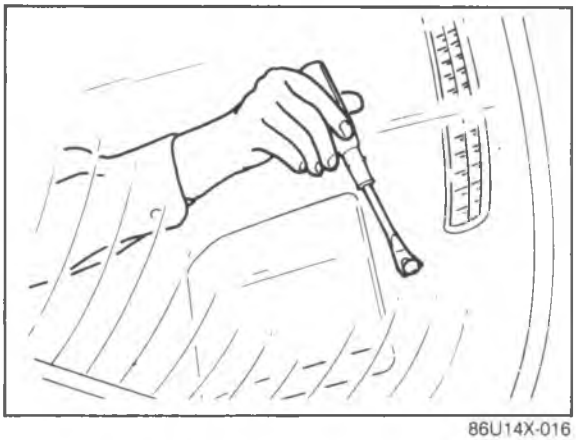

86U14X-016

4. Remove the fasteners and remove the rear package tray.

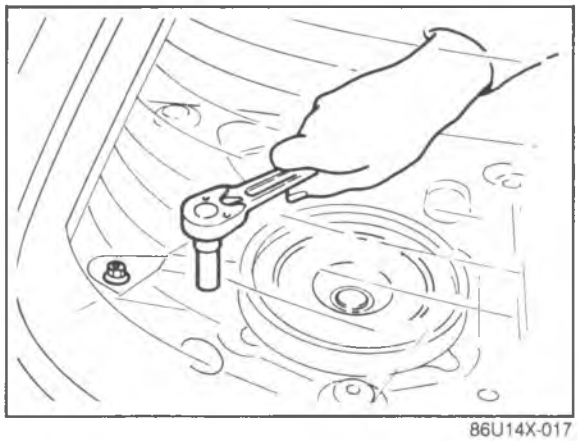

86U14X-017

5. Remove the bolts and remove the trunk lid hinge bracket.

INSTALLATION

Install in the reverse order of removal.

Tightening torque:

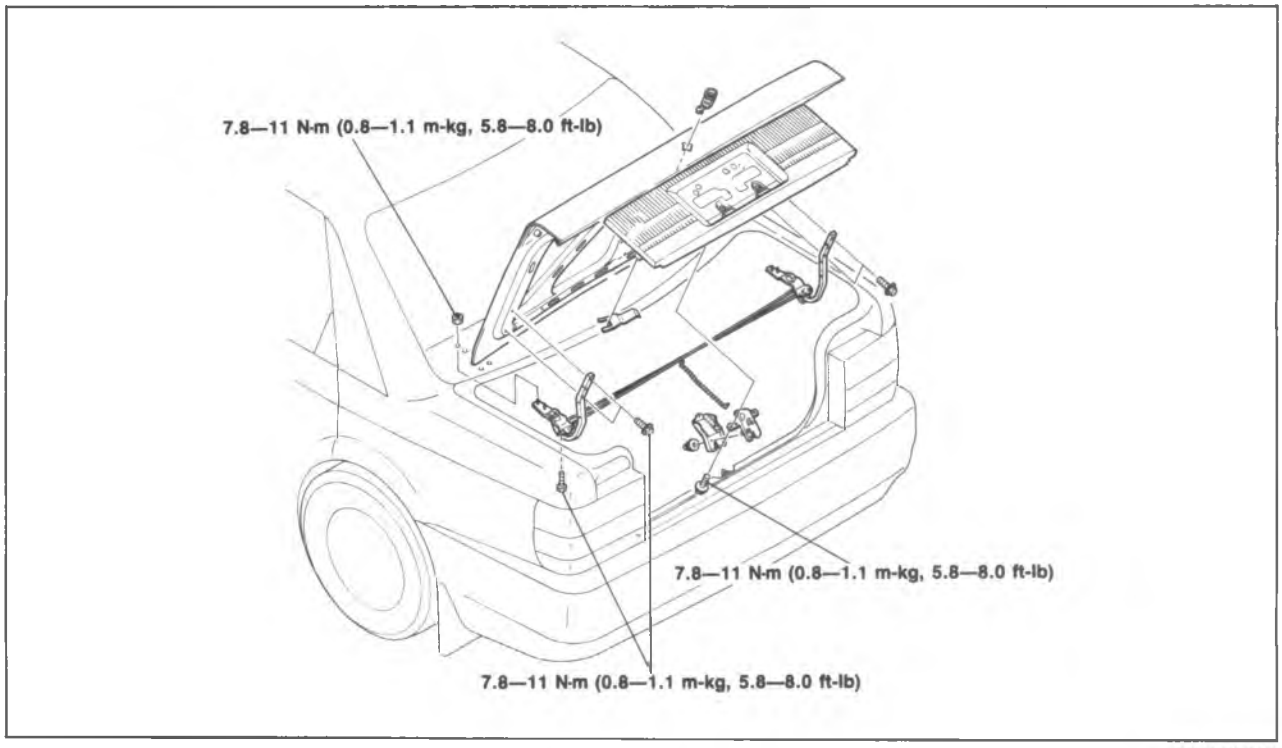

86U14X-018

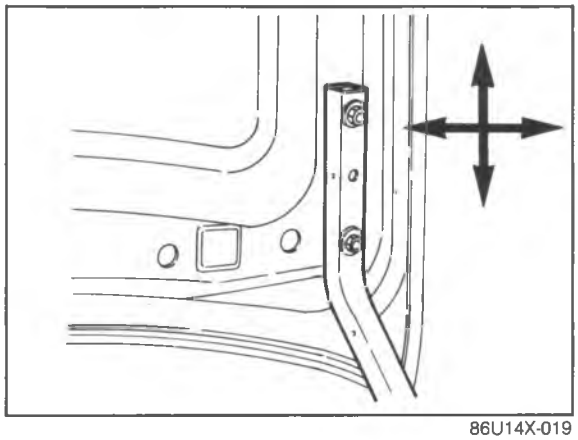

86U14X-019

ADJUSTMENT

Trunk Lid

1. Adjust the trunk lid by loosening the lid to hinge mounting bolts and repositioning it.

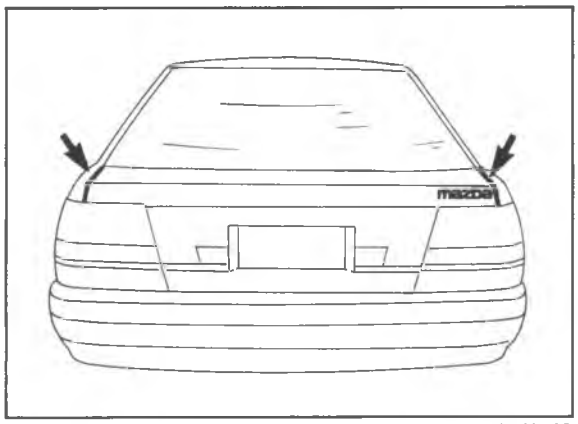

86U14X-020

2. Align the trunk lid evenly as shown in the figure.

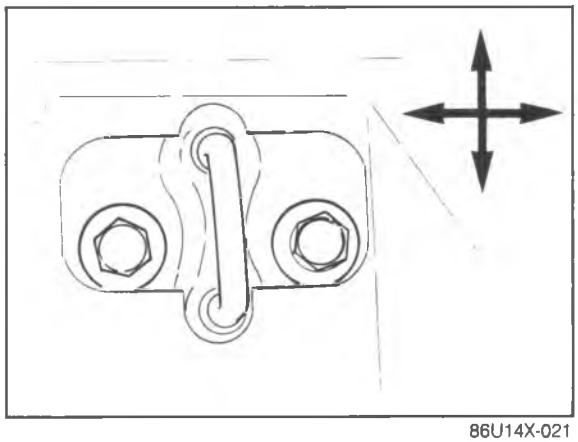

86U14X-021

Trunk Lid Striker

1. Loosen the striker mounting bolts.
2. Tighten the bolts after adjusting.

Tightening torque:
7.8—11 N·m (0.8—1.1 m-kg, 5.8—8.0 ft-lb)

REAR HATCH

STRUCTURAL VIEW

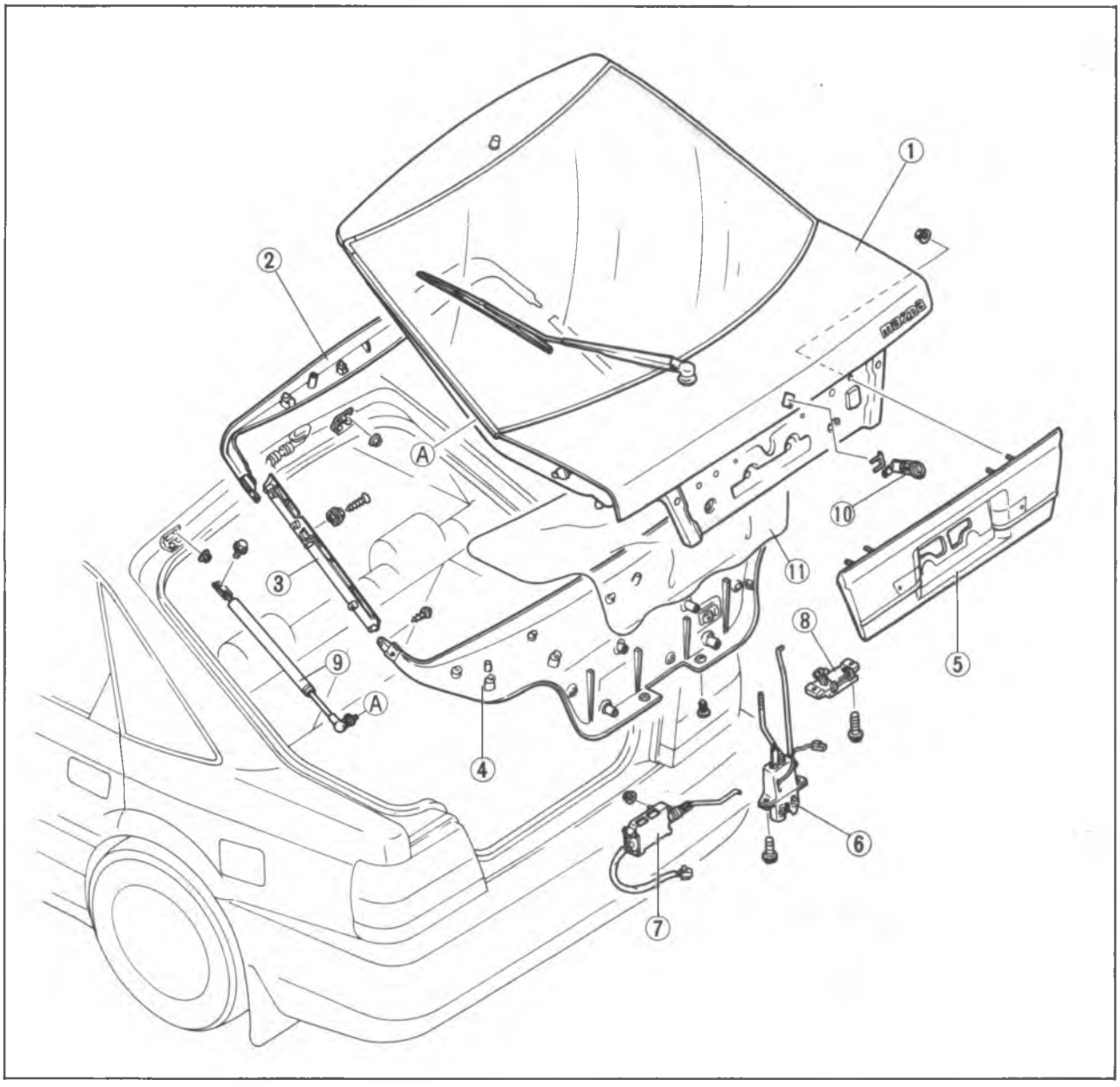

86U14X-022

1. Rear hatch
2. Upper trim
3. Side trim
4. Lower trim
5. Rear finisher
6. Rear hatch lock
7. Lock controller
8. Rear hatch outer handle
9. Stay damper
10. Key cylinder
11. Rear hatch screen

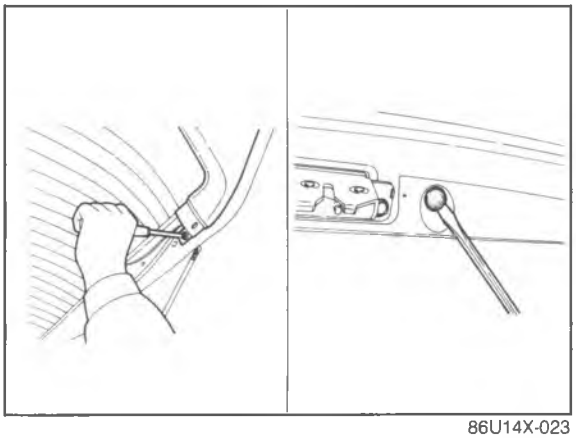

86U14X-023

REMOVAL

1. Disconnect the negative battery cable.
2. Remove the rear hatch trim.

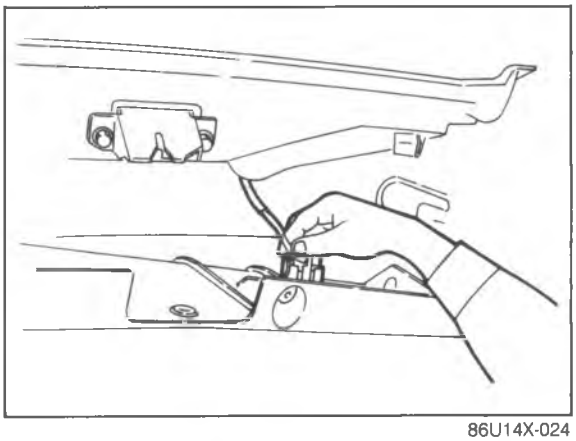

86U14X-024

3. Disconnect the connector, then remove the cargo room light.
4. Remove the rear hatch screen.

Caution
Remove the screen carefully so that it may be reused.

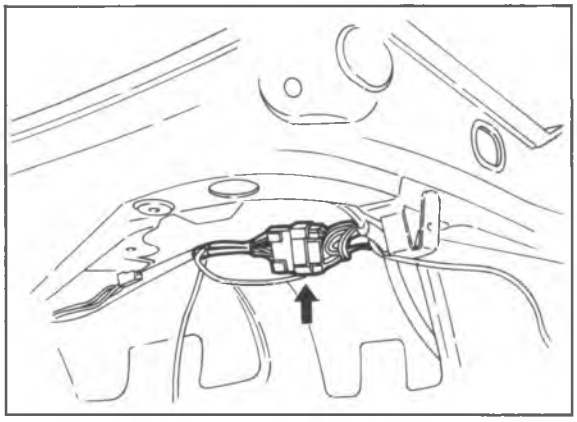

86U14X-025

5. Disconnect the rear defogger and wiper motor connectors, then remove the wire harness through the rear hatch.

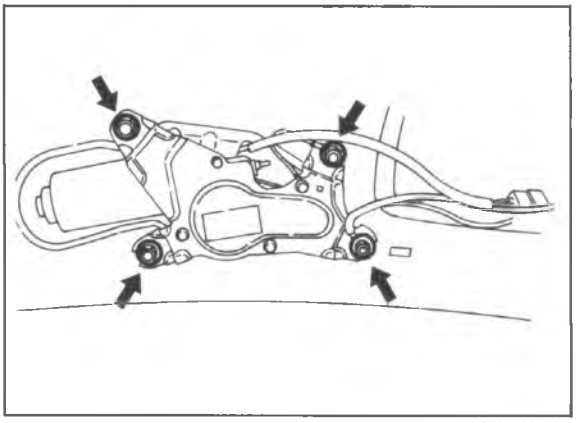

86U14X-026

6. Remove the wiper arm.
7. Remove the wiper motor.

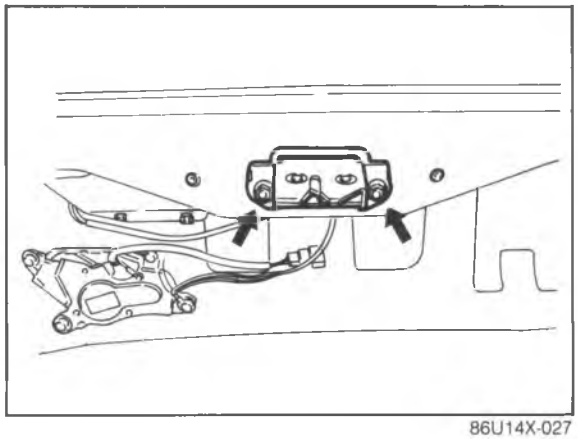

86U14X-027

8. Remove the opening rod.
9. Remove the rear hatch opener.

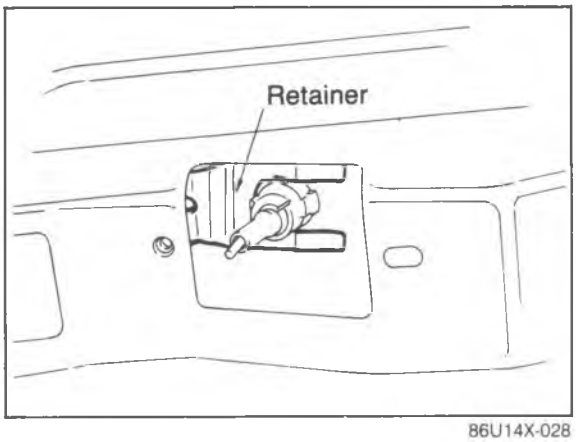

86U14X-028

10. Remove the retainer, and the key cylinder.

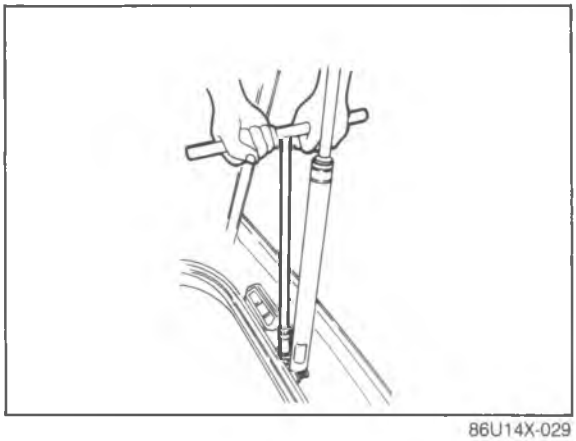

86U14X-029

11. Remove the stay damper mounting bolts.
12. Disconnect the rear washer hose.
13. Remove the wiring harness.

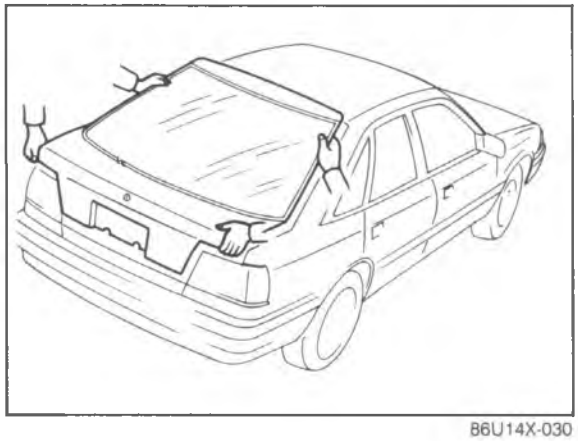

86U14X-030

14. Remove the rear hatch hinge to door mounting bolts.
15. Remove the rear hatch.

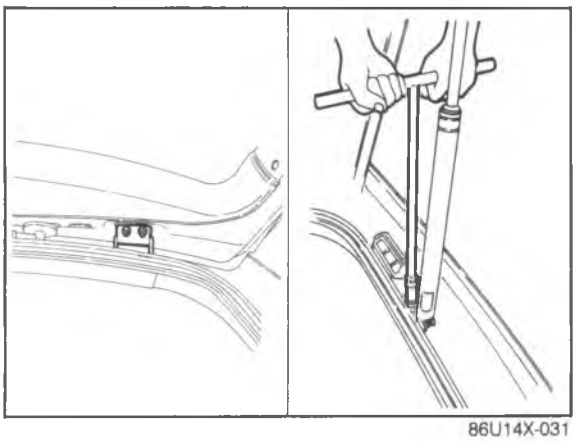

86U14X-031

INSTALLATION

Install in the reverse order of removal.

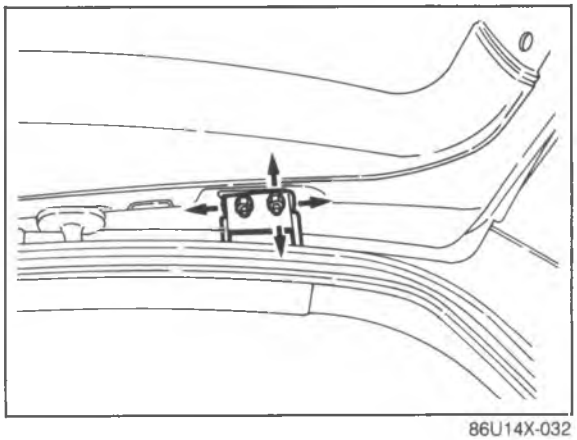

86U14X-032

ADJUSTMENT

Rear Hatch Hinge

Loosen the door hinge mounting nuts and make the adjustment.

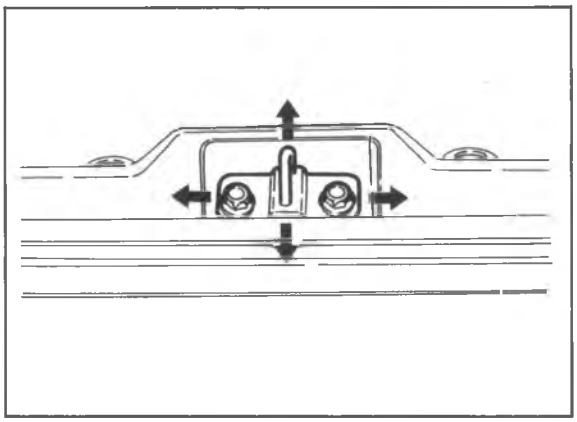

86U14X-033

Striker

Loosen the striker mounting bolts and make the adjustment.

FRONT DOORS

STRUCTURAL VIEW

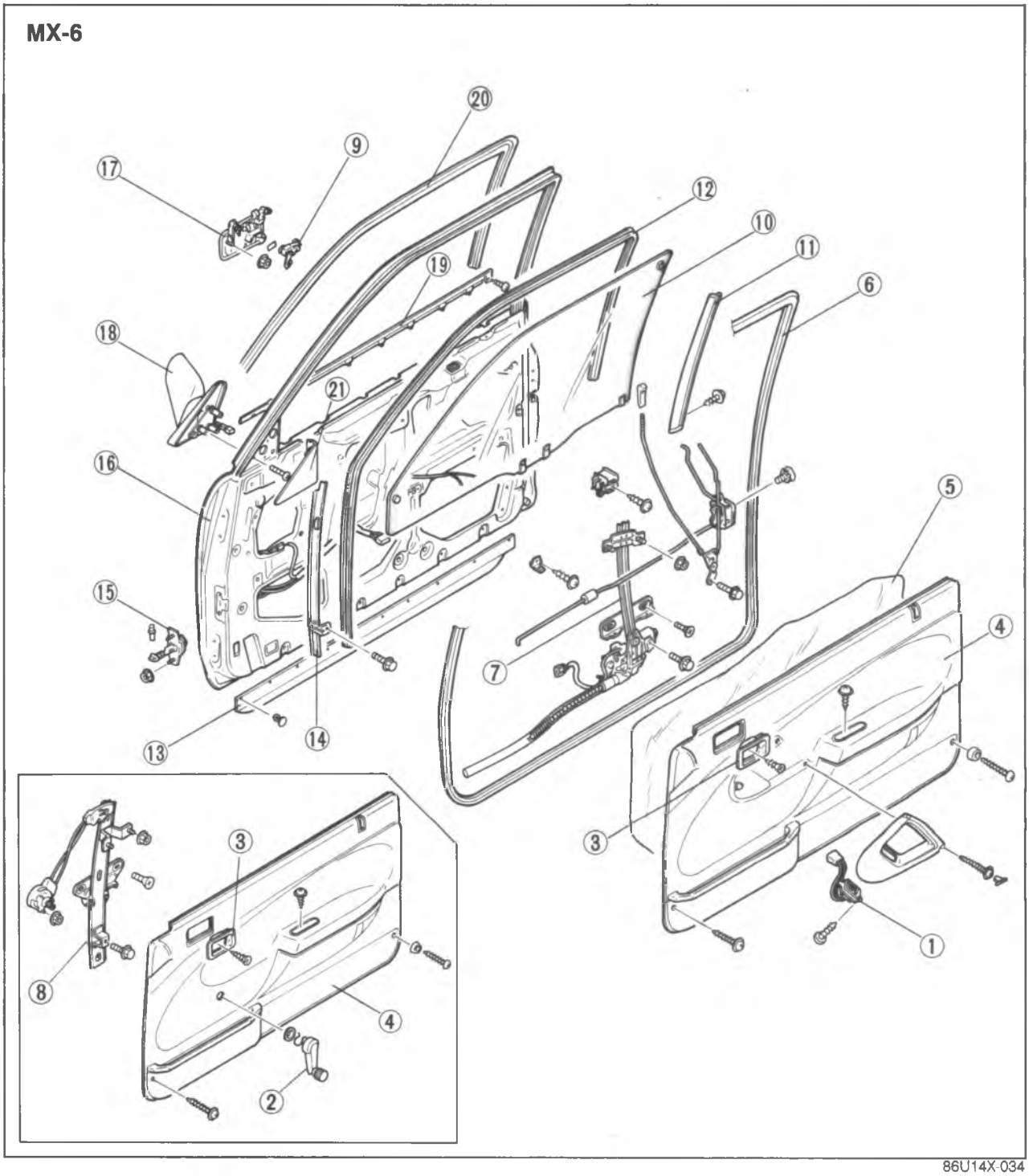

86U14X-034

1. Power window switch
2. Regulator handle
3. Inner handle cover
4. Door trim
5. Door screen
6. Weatherstrip
7. Regulator (power type)
8. Regulator (manual type)
9. Key cylinder
10. Glass
11. Glass guide
12. Runchannel
13. Weatherstrip
14. Glass guide
15. Door checker
16. Door
17. Outer handle
18. Door mirror
19. Beltline molding
20. Weatherstrip
21. Sail inner garnish

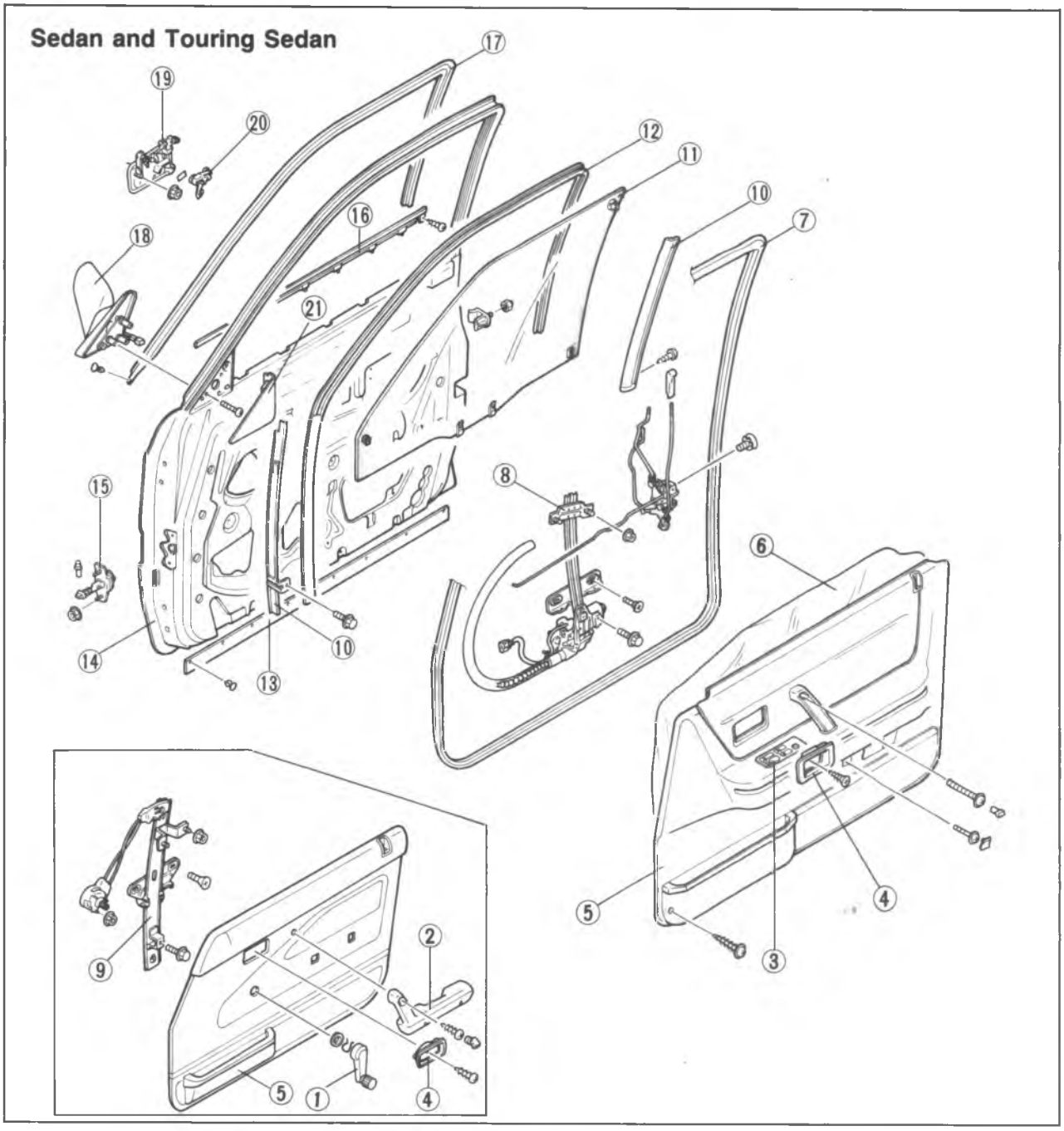

86U14X-035

1. Regulator handle
2. Arm rest
3. Power window switch
4. Inner handle cover
5. Door trim
6. Door screen
7. Weatherstrip
8. Regulator (power type)
9. Regulator (manual type)
10. Glass guide
11. Glass
12. Runchannel
13. Weatherstrip
14. Door
15. Door checker
16. Beltline molding
17. Weatherstrip
18. Door mirror
19. Outer handle
20. Key cylinder
21. Sail inner garnish

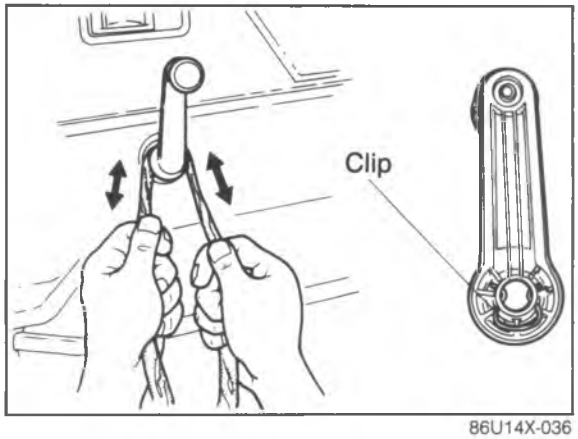

86U14X-036

REMOVAL
Front Door Glass and Regulator

Note
Raise the door glass 100 mm (3.94 in) from the fully open position.

1. Remove the clip and regulator handle. (Manual type)

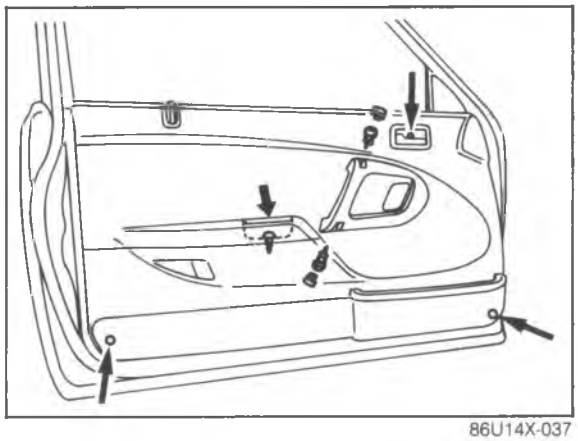
86U14X-037

2. Remove the inner handle cover, the screws (arrows), and the door trim.

Note
For vehicles with power windows, disconnect the connectors.

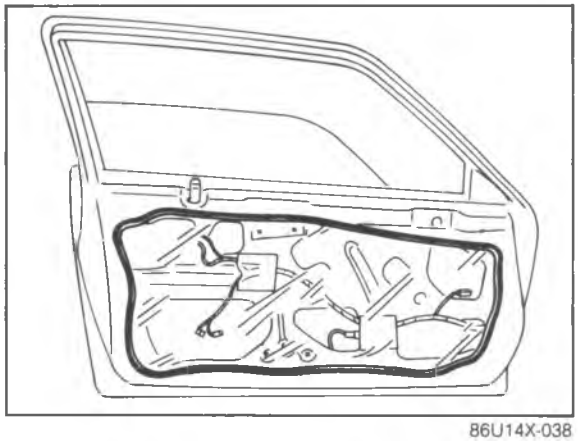
86U14X-038

3. Remove the door screen.

Caution
Remove the screen carefully so that it may be reused.

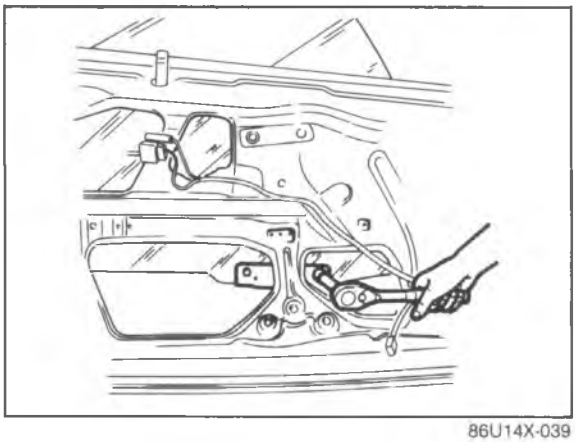
86U14X-039

4. Position the door glass so that the mounting bolts can be removed from the service holes.
5. Remove the mounting bolts.

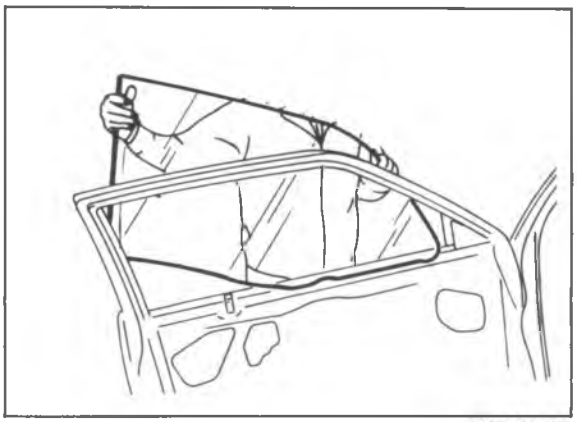

86U14X-060

6. Remove the beltline molding. (Refer to page 24—39)
7. Remove the door glass upward.

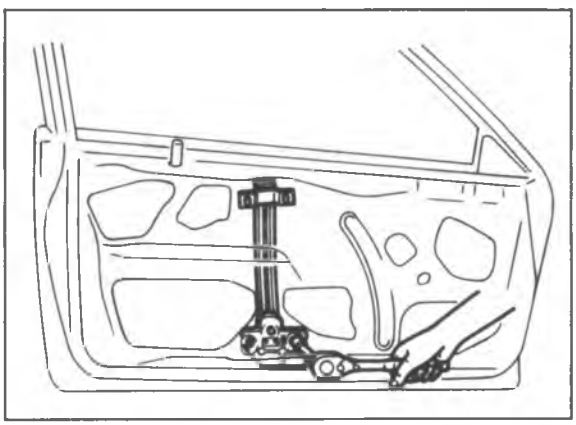

86U14X-040

8. Remove the mounting bolts, and remove the regulator through the service hole.

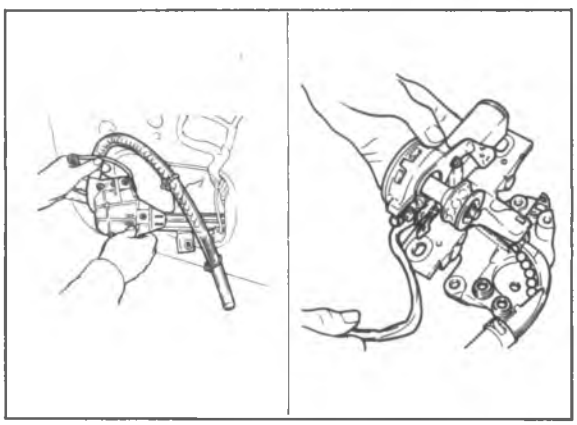

86U14X-041

9. Remove the window motor mounting bolt, and remove the motor from the regulator (power window).

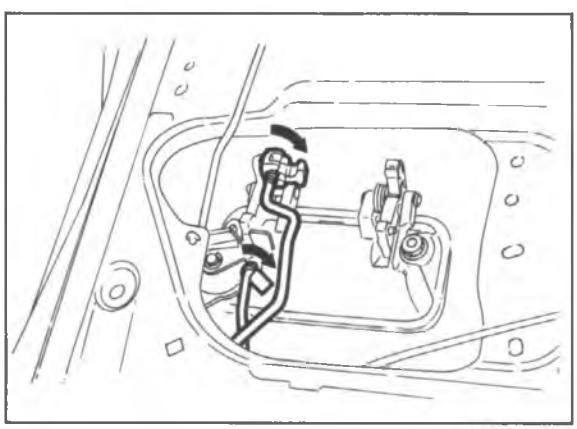

69G14X-036

Removal of Outer Handle and Key Cylinder

1. Disconnect the rod from the outer handle.

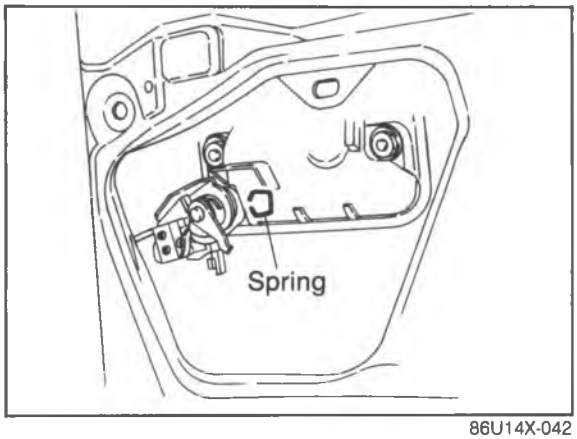

86U14X-042

2. Remove the key cylinder spring.
3. Remove the key cylinder.

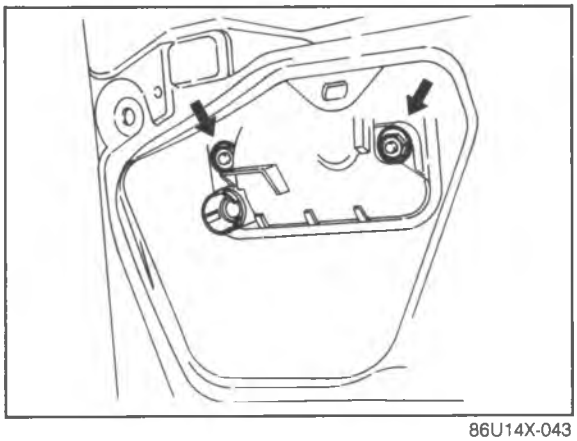

86U14X-043

4. Remove the mounting nuts and remove the outer handle.

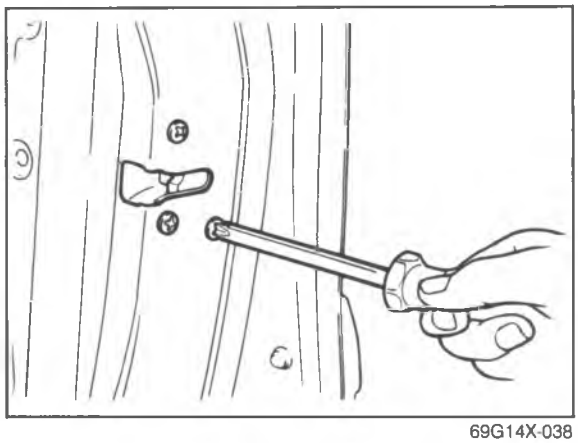

69G14X-038

Removal of Door Lock Assembly

1. Remove the mounting screws.
2. Remove the door lock assembly.

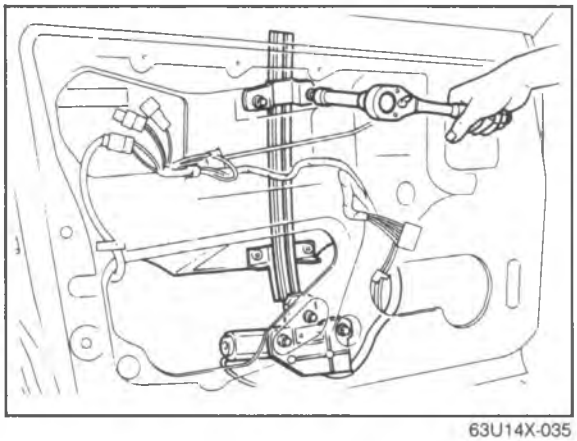

63U14X-035

INSTALLATION

Install in the reverse order of removal, noting the following.

Power Window

Before installing the motor, connect the leads to a battery and run the regulator down to the position shown.

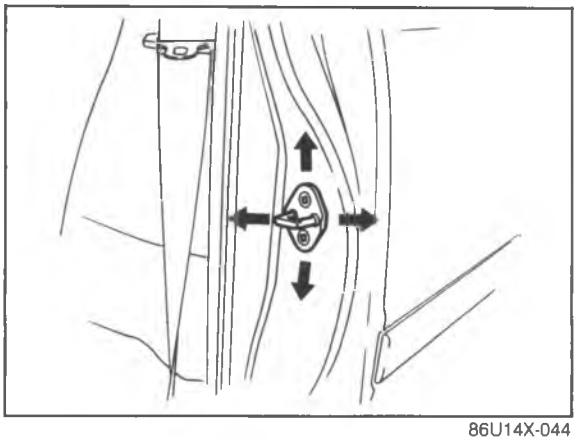

86U14X-044

ADJUSTMENT

Door Lock Striker

1. Check that the door can be closed easily and whether there is any looseness. If there is a problem, loosen the striker mounting screws and adjust by moving the striker down, or laterally.
2. Check the rear offset of the door to the body. If there is a problem, adjust by moving the door lock striker laterally.

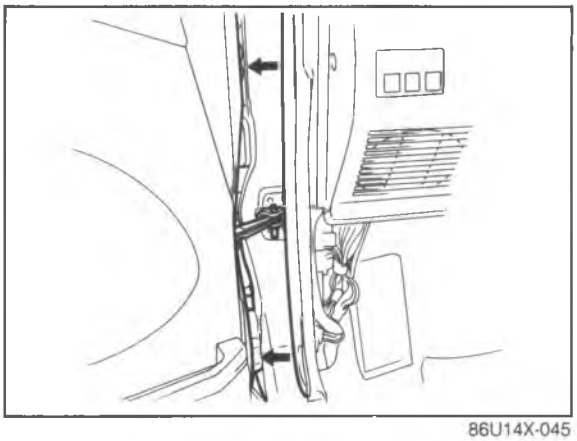

86U14X-045

Door Hinge

1. If looseness is found when the door is opened, tighten the door hinge mounting bolts (arrows).
2. Align the door and body by loosening and adjusting the door hinge mounting bolts.

Note
If noise is heard from the checker when the door is opened, apply grease to the checker cam.

REAR DOORS

STRUCTURAL VIEW

Sedan and Touring Sedan

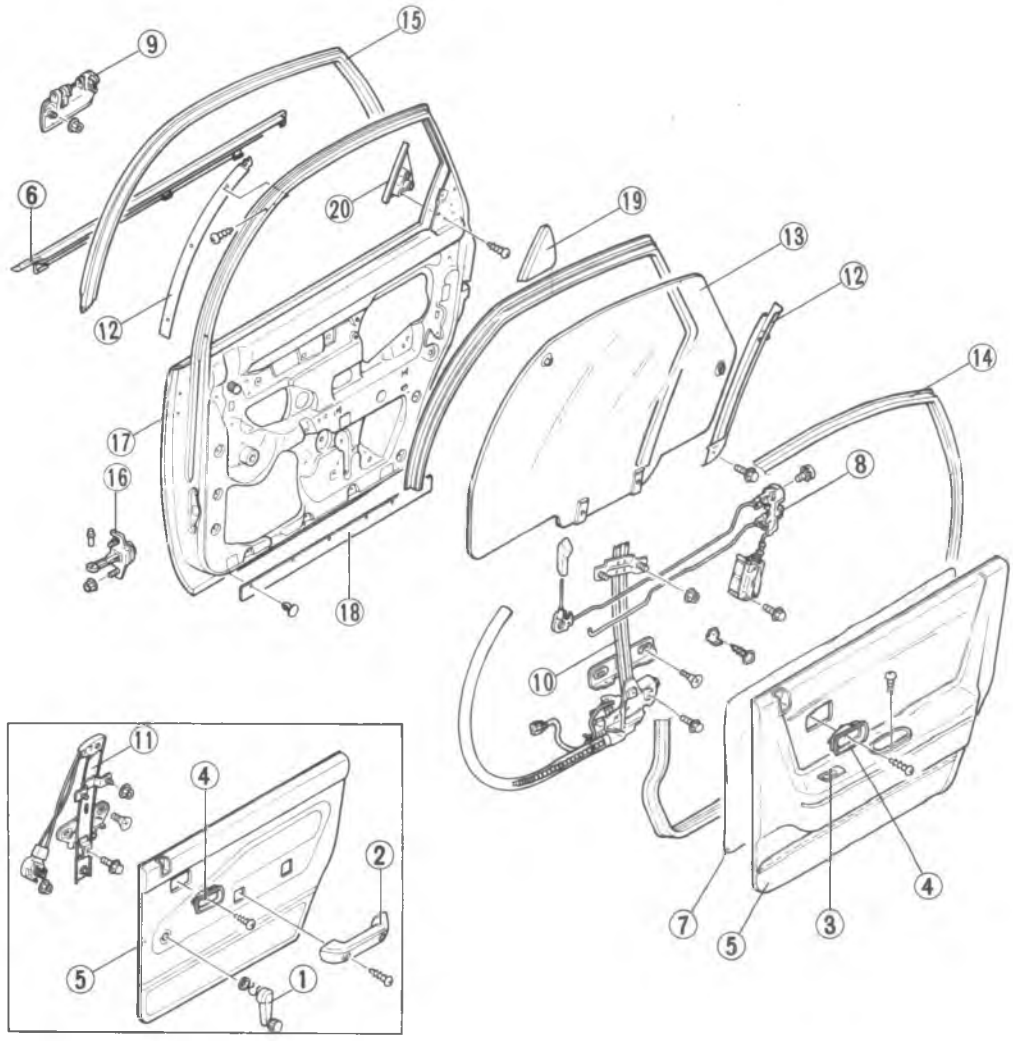

86U14X-046

1. Regulator handle (manual type)
2. Arm rest
3. Power window switch
4. Inner handle cover
5. Door trim
6. Belt line molding
7. Door screen
8. Door lock
9. Outer handle
10. Regulator (power type)
11. Regulator (manual type)
12. Glass guide
13. Glass
14. Weatherstrip
15. Weatherstrip
16. Door checker
17. Door
18. Weatherstrip
19. Sail inner garnish
20. Sail outer garnish

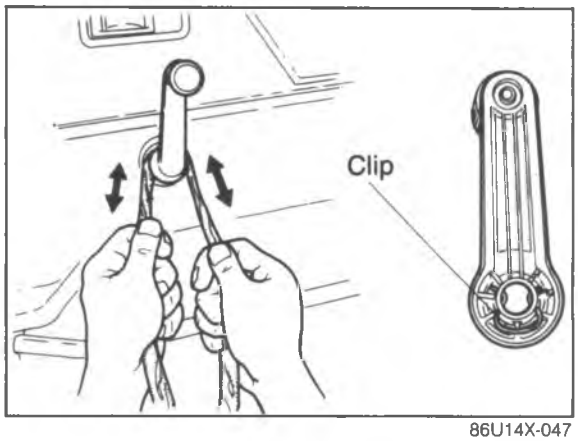

86U14X-047

REMOVAL

Rear Door Glass and Regulator

1. Lower the door glass the way.
2. Remove the clip. (Manual type)
3. Remove the regulator handle. (Manual type)

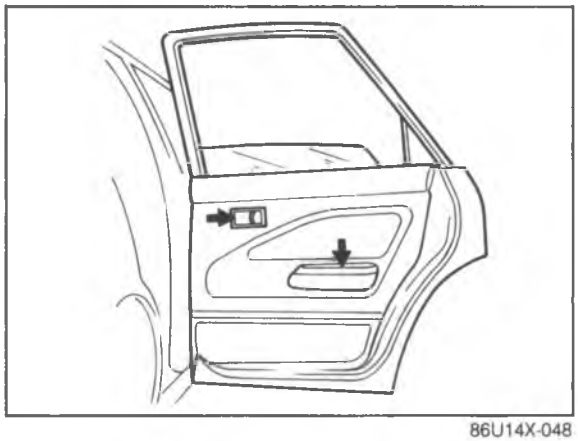
86U14X-048

4. Remove the inner handle cover.
5. Remove the door trim.

Note
For vehicles with power windows, disconnect the connectors.

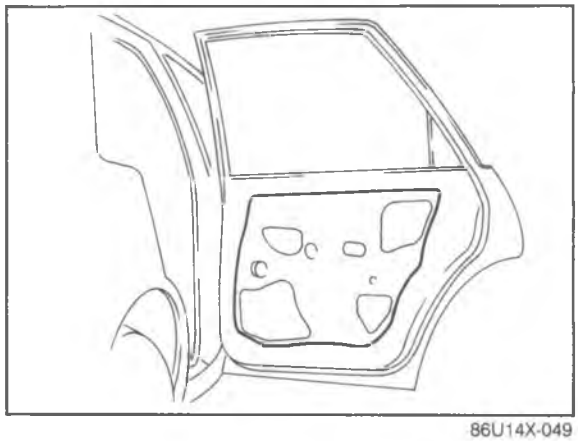
86U14X-049

6. Remove the door screen.

Caution
Remove the screen carefully so that it may be reused.

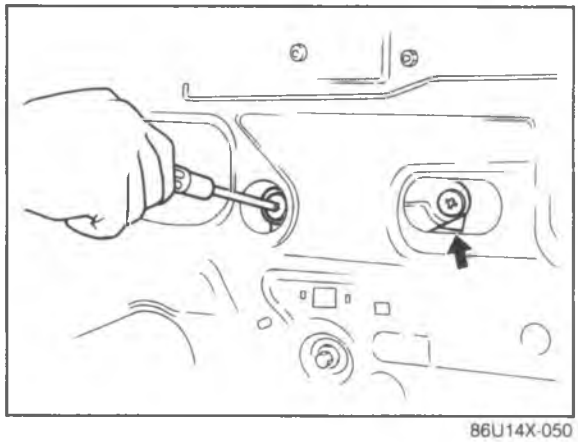
86U14X-050

7. Position the door glass so that the mounting bolts can be removed from the service hole.
8. Remove the mounting bolts.

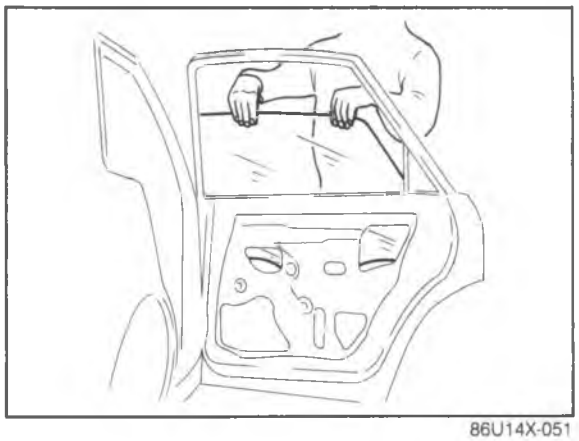

86U14X-051

9. Remove the door glass upward.

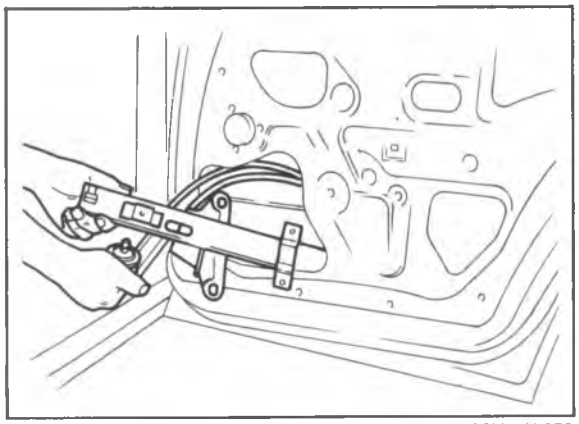

86U14X-052

10. Remove the mounting bolts, and remove the window regulator through the service hole.
11. Remove the window motor mounting bolts, then remove the motor from the regulator (power window).

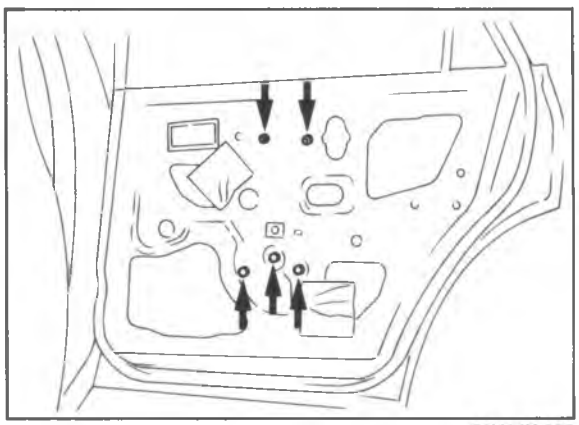

86U14X-053

INSTALLATION

Install in the reverse order of removal, noting the following.

Tightening torque:

Torque		N·m (m-kg, ft-lb)
Door lock assembly		4.22—6.18 (0.43—0.63, 3.10—4.54)
Outer handle		8.8—13 (0.9—1.3, 6.5—9.4)
Glass guide		7.8—11 (0.8—1.1, 5.8—8.0)
Regulator	Nut	8.8—13 (0.9—1.3, 6.5—9.4)
	Bolt	7.8—11 (0.8—1.1, 5.8—8.0)
Door lock striker		18—26 (1.8—2.7, 13—20)

Before installing the motor, connect the leads to a battery and run regulator down to the position shown.

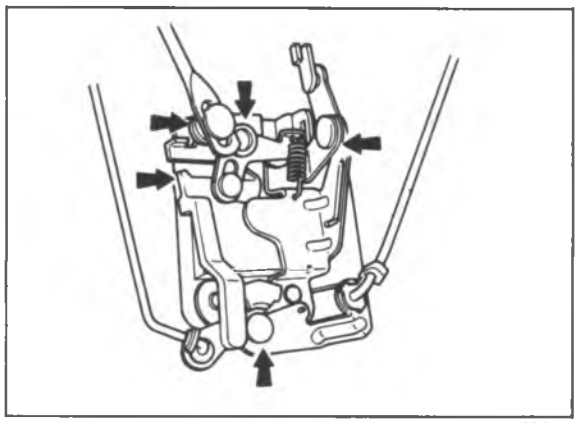

86U14X-054

Installation of door lock and outer handle

1. Before installing the door lock, apply grease to the places shown in the figure.
2. After installation, check that the door opens smoothly, and that the operation of the lock is correct when using the key and the door lock knob.

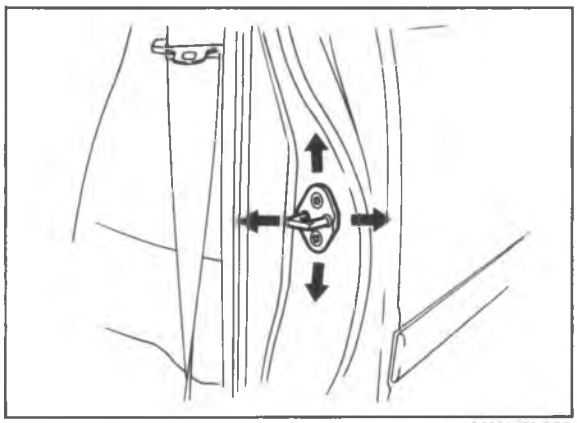

86U14X-055

ADJUSTMENT

Door Lock Striker

1. Check that the door can be closed easily and whether there is any looseness. If there is a problem, loosen the striker mounting screws and adjust by moving the striker vertically, or laterally.
2. Check the rear offset of the door to the body. If there is a problem, adjust by moving the door lock striker laterally.

FRONT BUMPER

STRUCTURAL VIEW

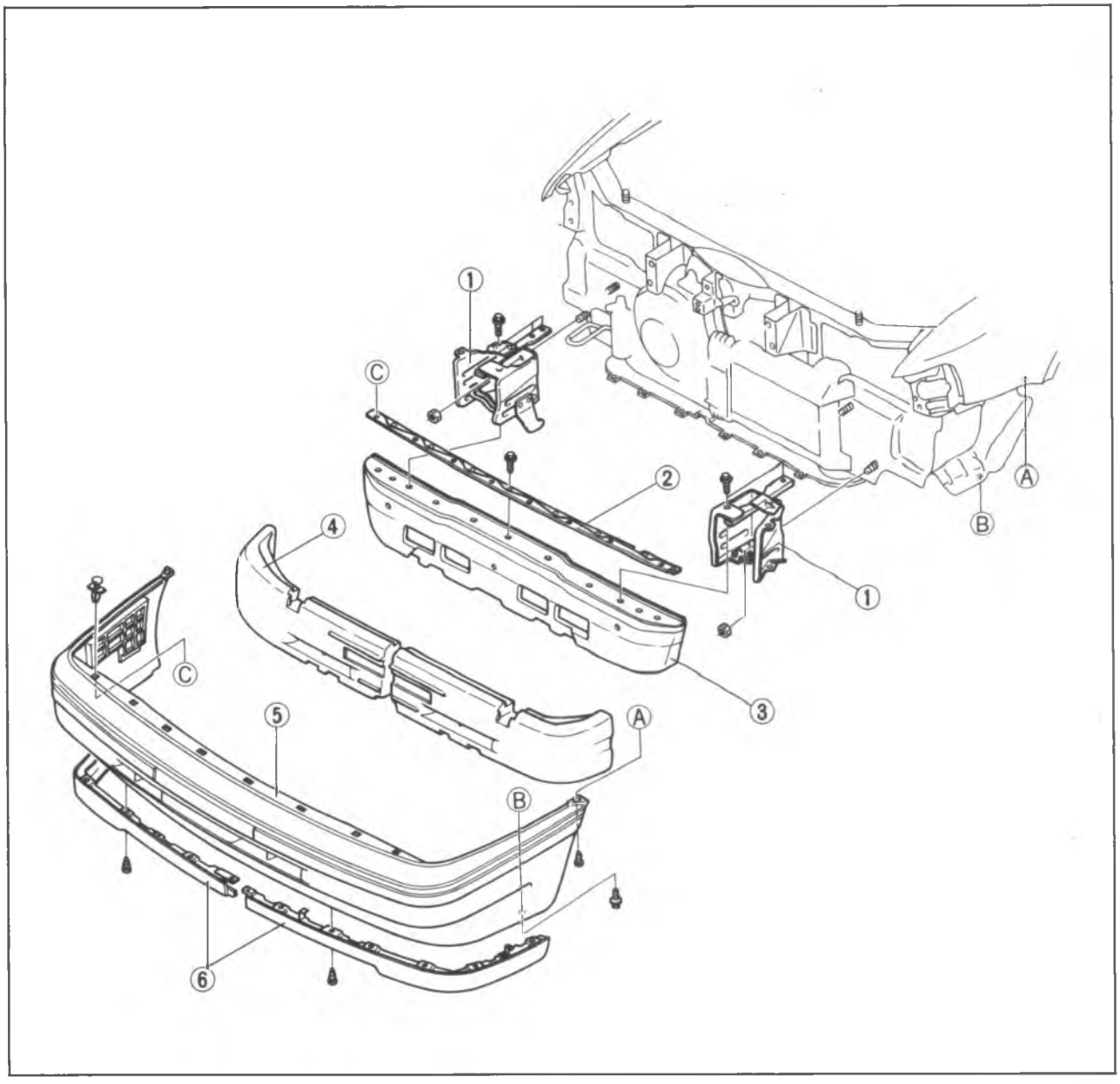

86U14X-056

1. Bumper stay
2. Set plate
3. Reinforcement
4. Energy absorbing foam
5. Bumper
6. Front airdam skirt

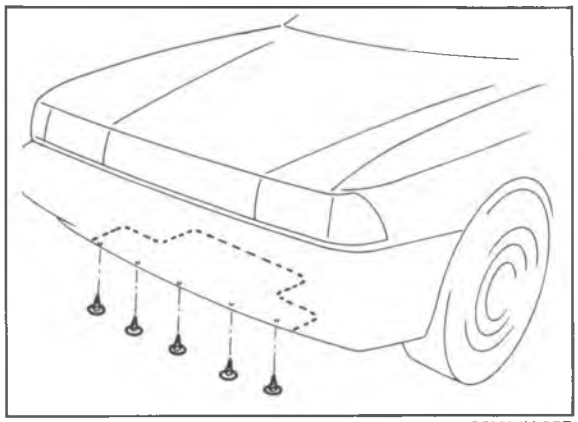

86U14X-057

REMOVAL

1. Remove the under cover mounting screws.

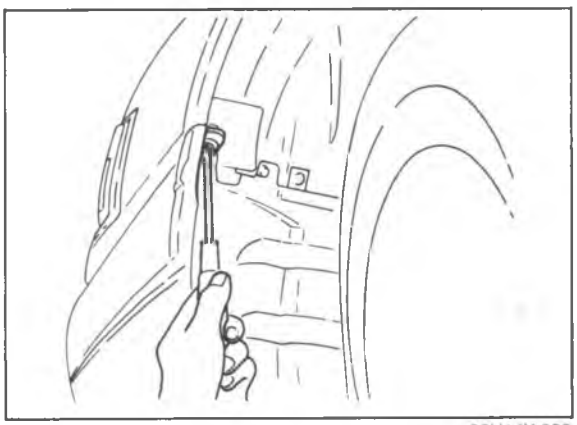

86U14X-058

2. Remove the bumper mounting screws.

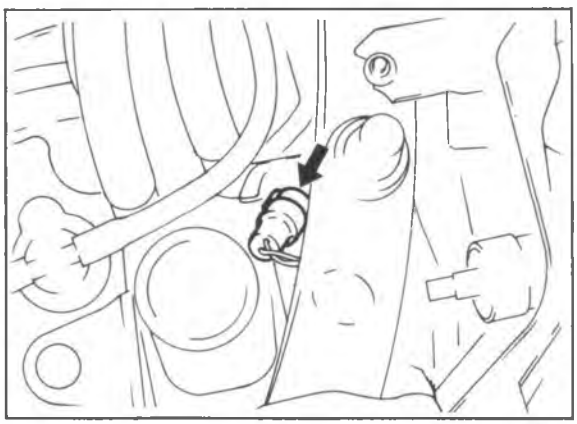

69G14X-099

3. Disconnect the side turn signal light connector.

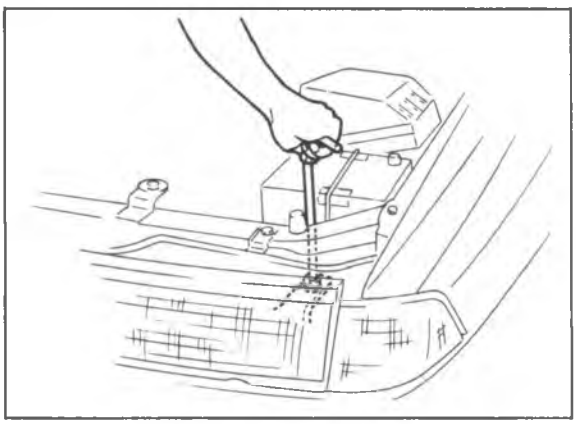

86U14X-059

4. Remove the front side bumper stay mounting bolts and loosen the rear side bolts.

INSTALLATION

Install the front side bumper stay mounting bolts and torque the rear side bolts.

Tightening torque:
31—46 N·m (3.2—4.7 m-kg, 23—34 ft-lb)

REAR BUMPER

STRUCTURAL VIEW

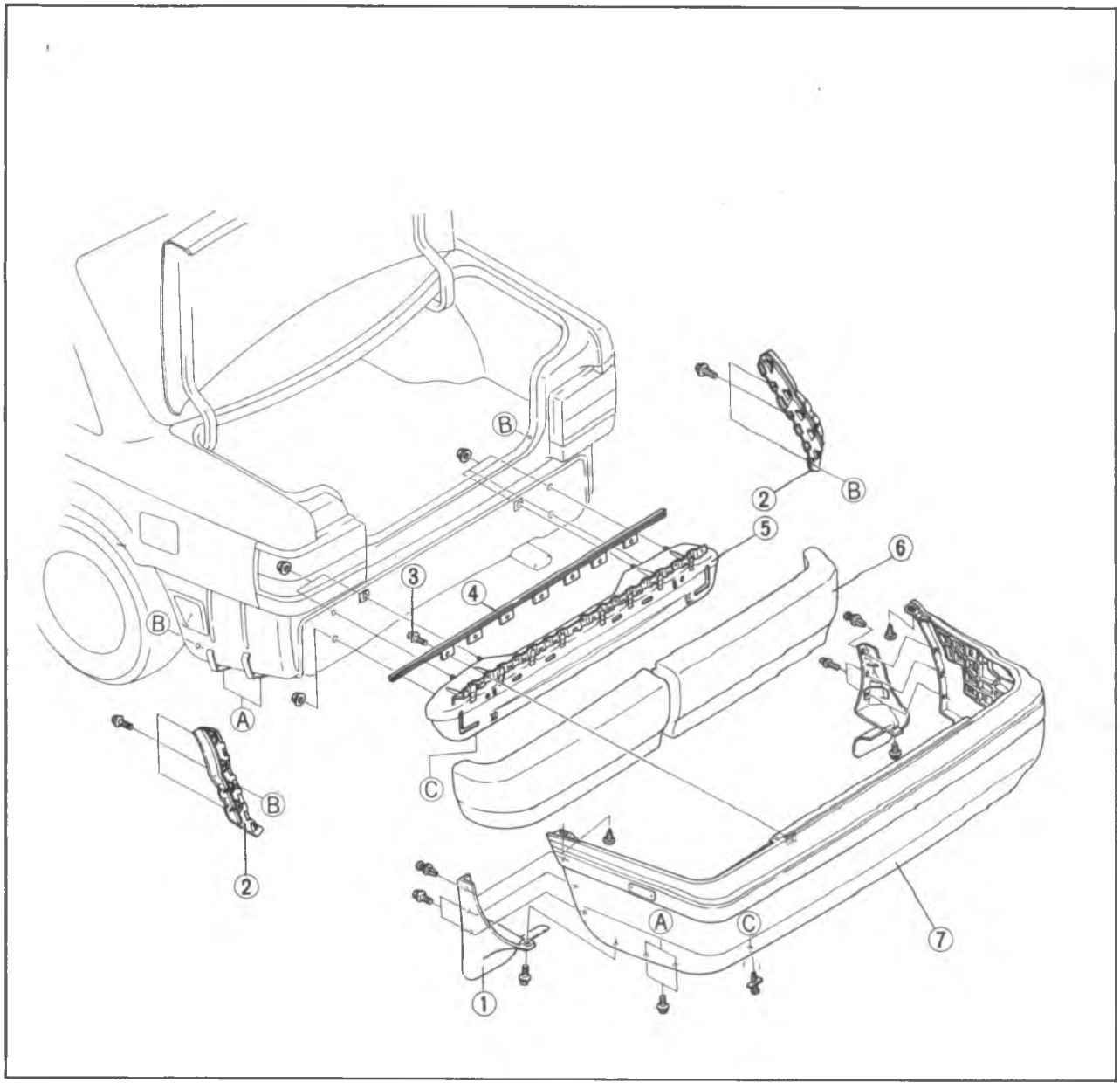

86U14X-060

1. Flap
2. Splash shield
3. Bolts
4. Set plate
5. Reinforcement
6. Energy absorbing foam
7. Bumper

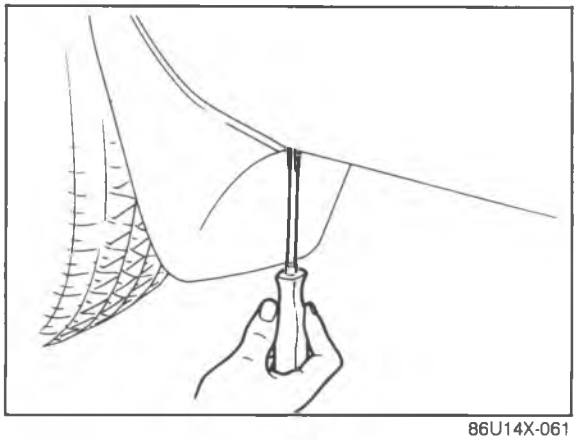

86U14X-061

REMOVAL

1. Remove the screws shown in the figure.

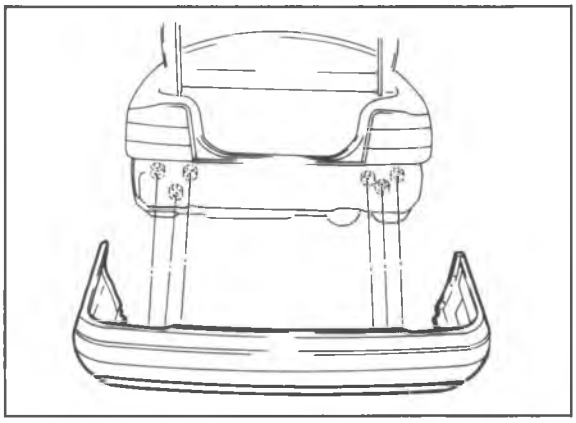

86U14X-062

2. Remove the bumper mounting nuts.

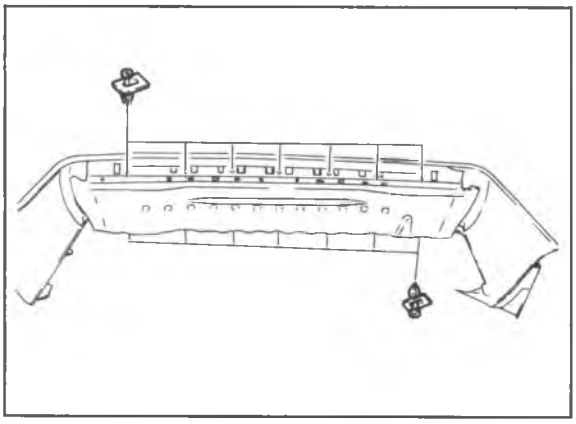

86U14X-063

3. Remove the nuts and fasteners shown in the figure and remove the reinforcement from the bumper.

INSTALLATION

Install in the reverse order of removal.

Tightening torque:
Bumper stay installation nuts:
31—46 N·m (3.2—4.7 m-kg, 23—34 ft-lb)

RADIATOR GRILLE

REMOVAL AND INSTALLATION

1. Remove in the sequence shown in the figure, referring to removal note for the specially marked parts.
2. Install in the reverse order of removal, referring to installation note for the specially marked parts.

86U14X-065

1. Screw
2. Fasteners
3. Radiator grille

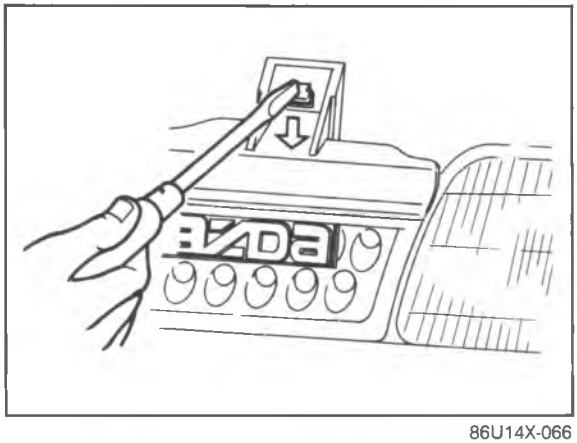

86U14X-066

Removal Note
Fasteners
Push the tabs of the fasteners (5) with a small screwdriver.

Installation Note
Insert the fasteners into the grille, then align with the installation holes in the body and press in the grille.

HEADLIGHT AND COMBINATION LIGHT

REMOVAL AND INSTALLATION

1. Disconnect the negative battery cable.
2. Remove in the sequence shown in the figure, referring to removal note for the specially marked parts.
3. Install in the reverse order of removal.

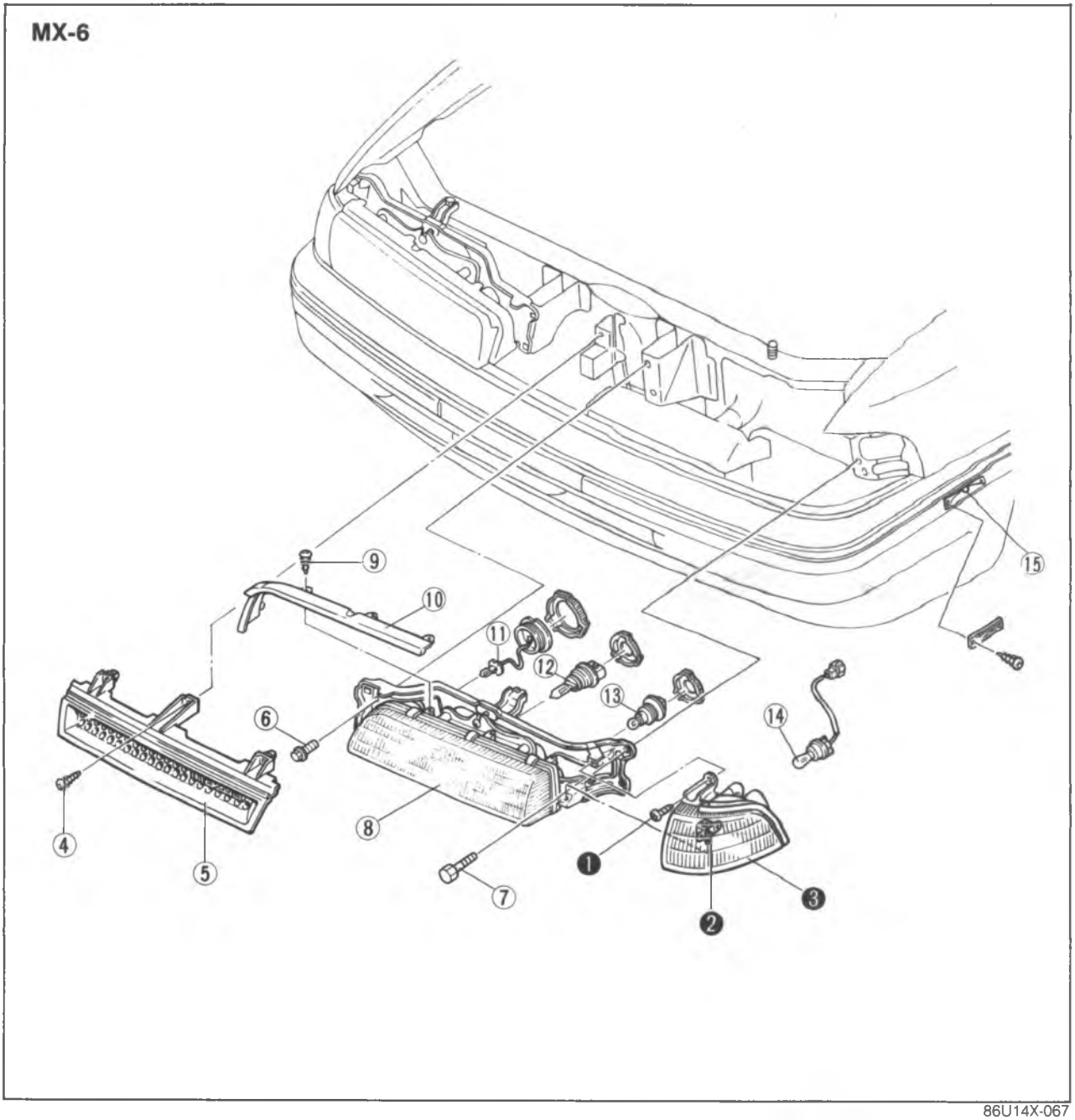

86U14X-067

1. Screw
2. Screw
3. Turn signal light assembly
4. Screw
5. Radiator grille
6. Bolt
7. Bolts
8. Headlight assembly
9. Screws
10. Light garnish
11. Fog light bulb 55W
12. Headlight bulb 65/45W (9004)
13. Parking light bulb 8W (67)
14. Turn signal light bulb 27W (1156)
15. Side turn signal light bulb 5W (194)

Sedan and Touring Sedan

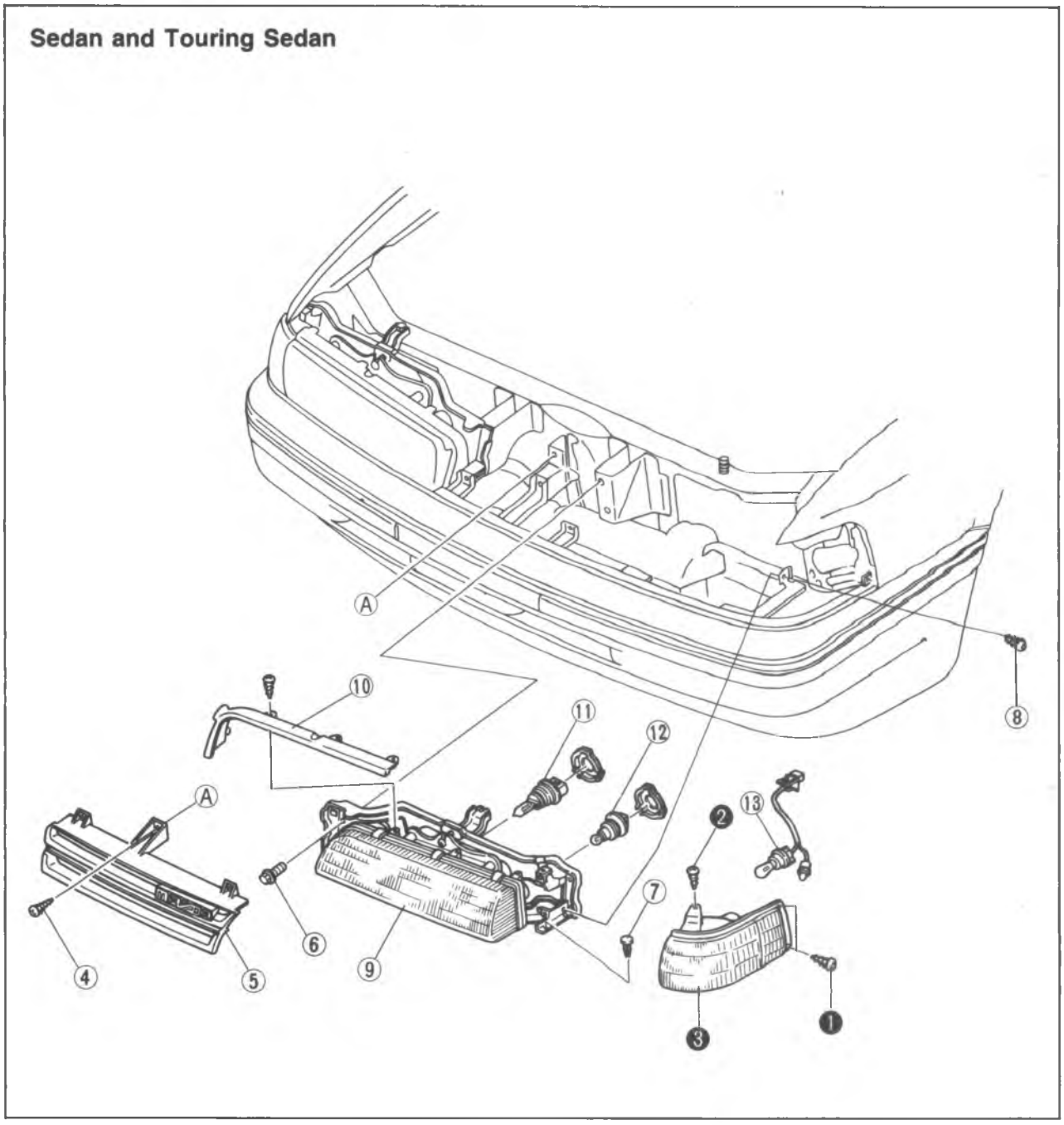

86U14X-068

1. Screw
2. Screw
3. Turn signal light assembly
4. Screw
5. Radiator grille
6. Bolts
7. Fastener
8. Screw
9. Headlight assembly
10. Light garnish
11. Headlight bulb 65/45W (9004)
12. Parking light bulb 8W (67)
13. Turn signal light bulb 27W (1156)

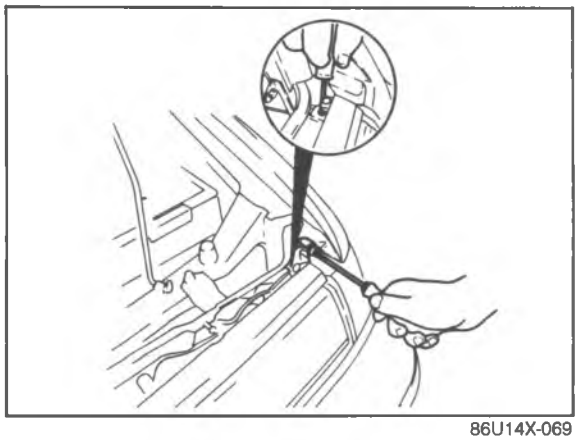

86U14X-069

Removal Note
Turn signal light (MX-6)
1. Remove the screws shown in the figure.
2. Disconnect the turn signal light connector.

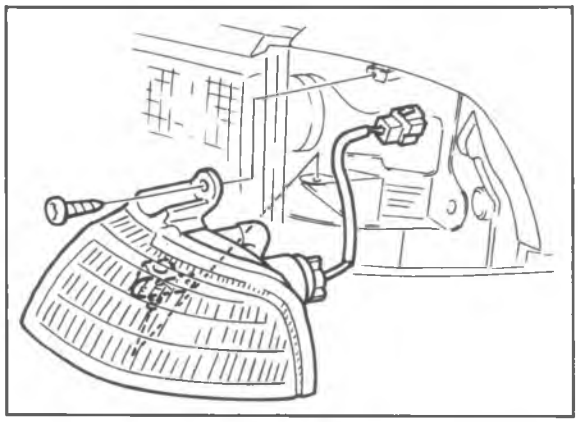

86U14X-070

3. Remove the turn signal light assembly.

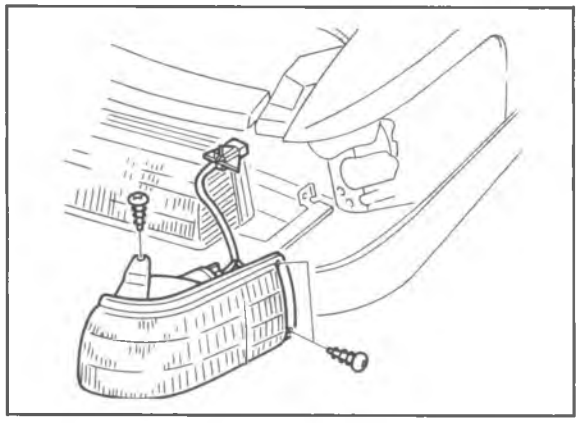

86U14X-071

Turn signal light (sedan and touring sedan)
1. Remove the screws shown in the figure.
2. Disconnect the turn signal and parking light connector.
3. Remove the turn signal and parking light assembly.

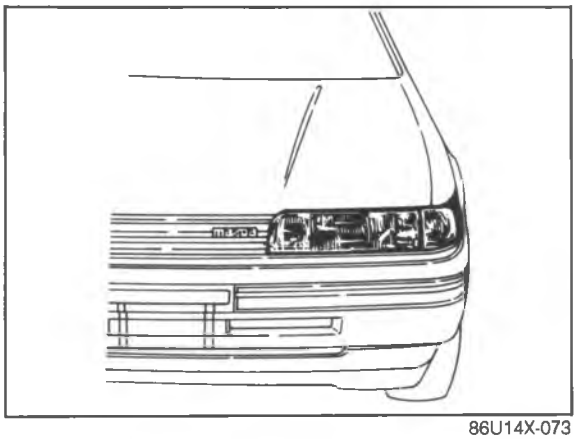

86U14X-073

AIMING

Headlight

1. Adjust the tires to the standard pressure.
2. Position the vehicle on a flat level surface (unloaded condition).

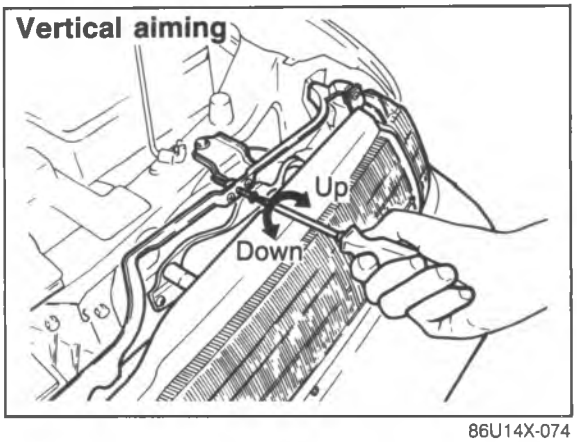

86U14X-074

3. Adjust the headlights to meet local regulations. To adjust, turn the two adjusting screws.

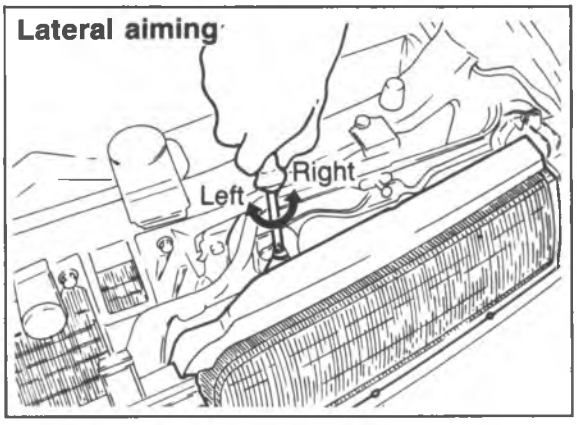

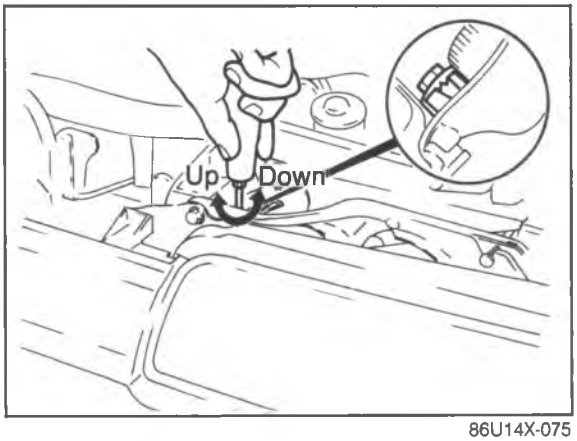

86U14X-075

Foglight (MX-6)

To adjust, turn the adjusting screw.

REAR COMBINATION LIGHT

REMOVAL AND INSTALLATION

1. Disconnect the negative battery cable.
2. Remove in the sequence shown in the figure.
3. Install in the reverse order of removal.

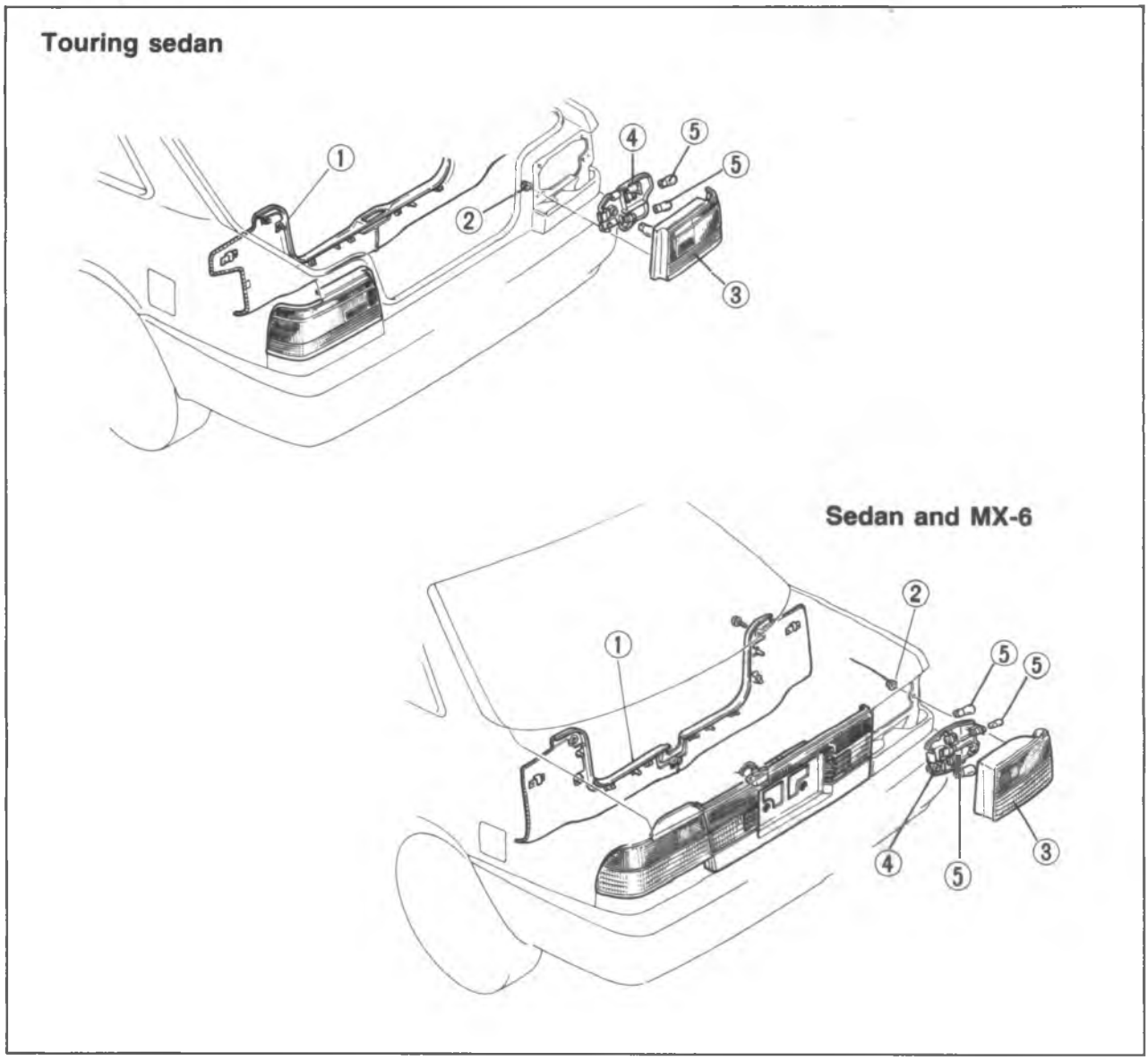

86U14X-076

Touring sedan Model

1. End trim
2. Nuts
3. Lens and body
4. Cover
5. Bulb: Turn signal light 27W (1156)
   Brake and tail light 27/8W (1157)
   Side marker light 5W (168)

Sedan and MX-6 Model

1. End trim
2. Nuts
3. Lens and body
4. Cover
5. Bulb: Turn signal light 27W (1156)
   Brake and tail light 27/8W (1157)
   Side marker light 5W (168)

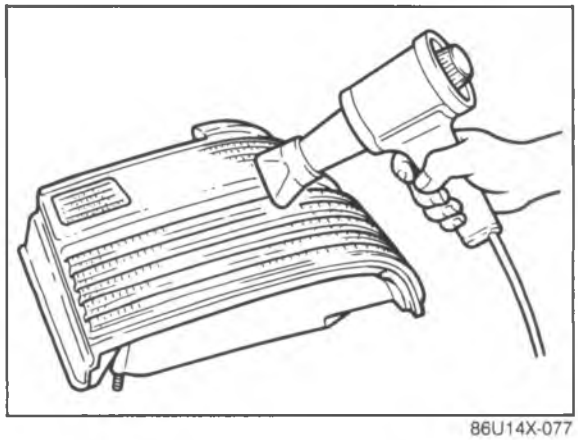

86U14X-077

REPLACEMENT OF REAR COMBINATION LIGHT LENS

1. Use a hot air blower to soften the "hot melt" (bonding agent) around the lens.

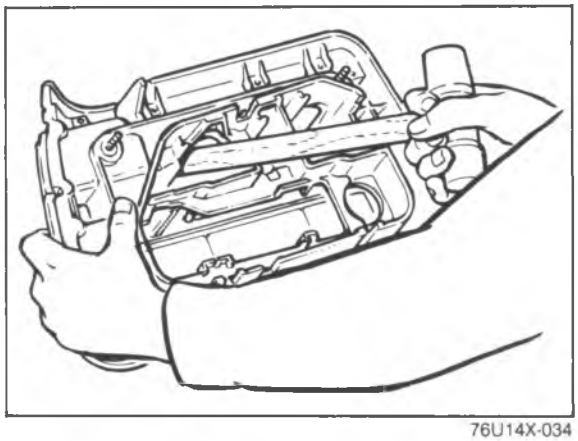

76U14X-034

2. Remove the lens from the light housing by pushing the rear of the lens with a hammer handle or round bar.

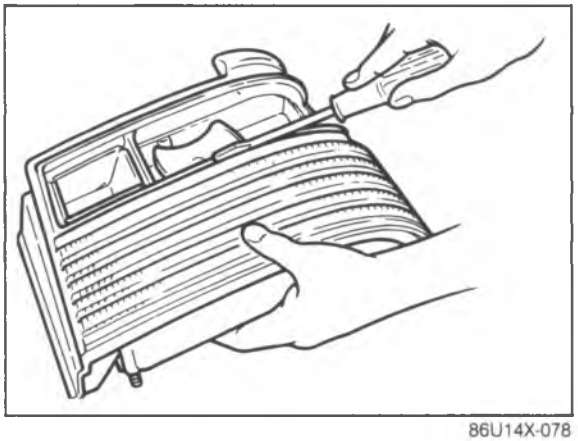

86U14X-078

3. Heat the light housing, and remove the "hot melt" and any fragments of the lens.

   Note
   a) The "hot melt" should be reused if possible.
   b) If the "hot melt" can be reused, the following step is unnecessary.

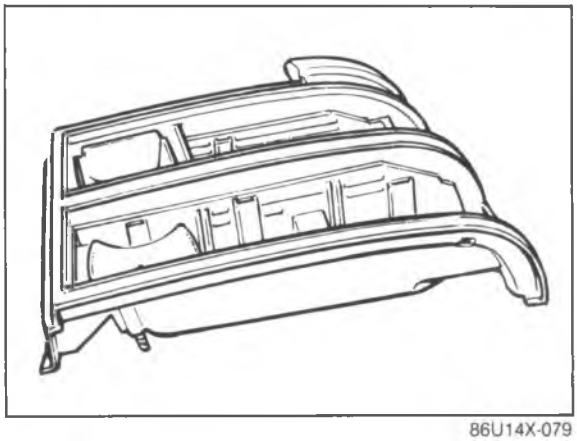

86U14X-079

4. Put **Uni-sealer** (8531 77 739) adhesive in the light housing groove.

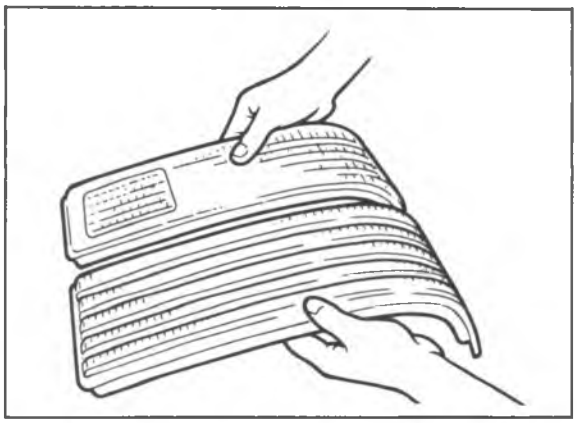

86U14X-080

5. Fit the new lens onto the light housing. Press the lens firmly so that it will adhere.

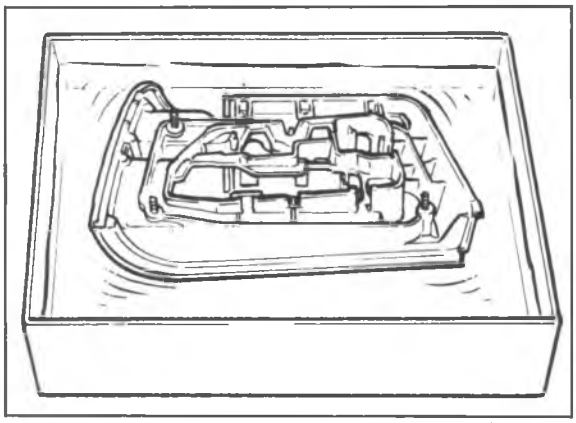

76U14X-038

6. Immerse the combination light in water to check for leaks.

LICENSE PLATE LIGHT AND CARGO ROOM LIGHT

REMOVAL AND INSTALLATION

1. Disconnect the negative battery cable.
2. Remove in the sequence shown in the figure.
3. Install in the reverse order of removal.

Sedan and MX-6

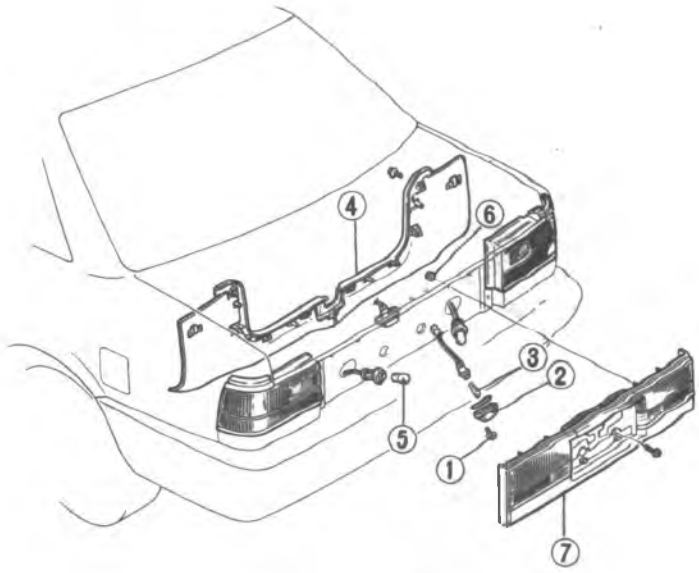

Touring Sedan

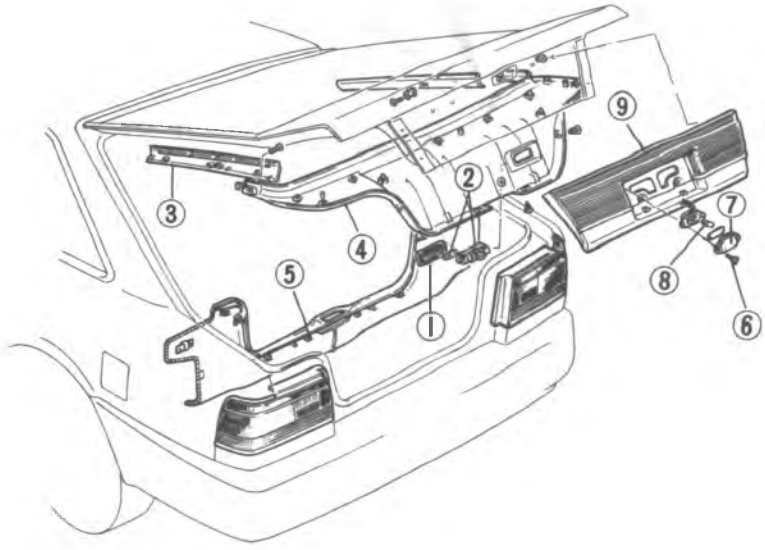

86U14X-081

Sedan and MX-6
License plate light
1. Screws
2. Lens
3. Bulb 5W x 2

Back-up light
4. End trim
5. Bulb 27W (1156)
6. Nuts
7. Rear finisher

Touring Sedan
Cargo room light
1. Lens
2. Switch and bulb assembly 5W

License plate light
3. Side trim
4. Lower trim
5. End trim
6. Screws
7. Lens
8. Bulb 5W x 2
9. Rear finisher

INTERIOR LIGHT AND MAP LIGHT

REMOVAL AND INSTALLATION

1. Disconnect the negative battery cable.
2. Remove in the sequence shown in the figure.
3. Install in the reverse order of removal.

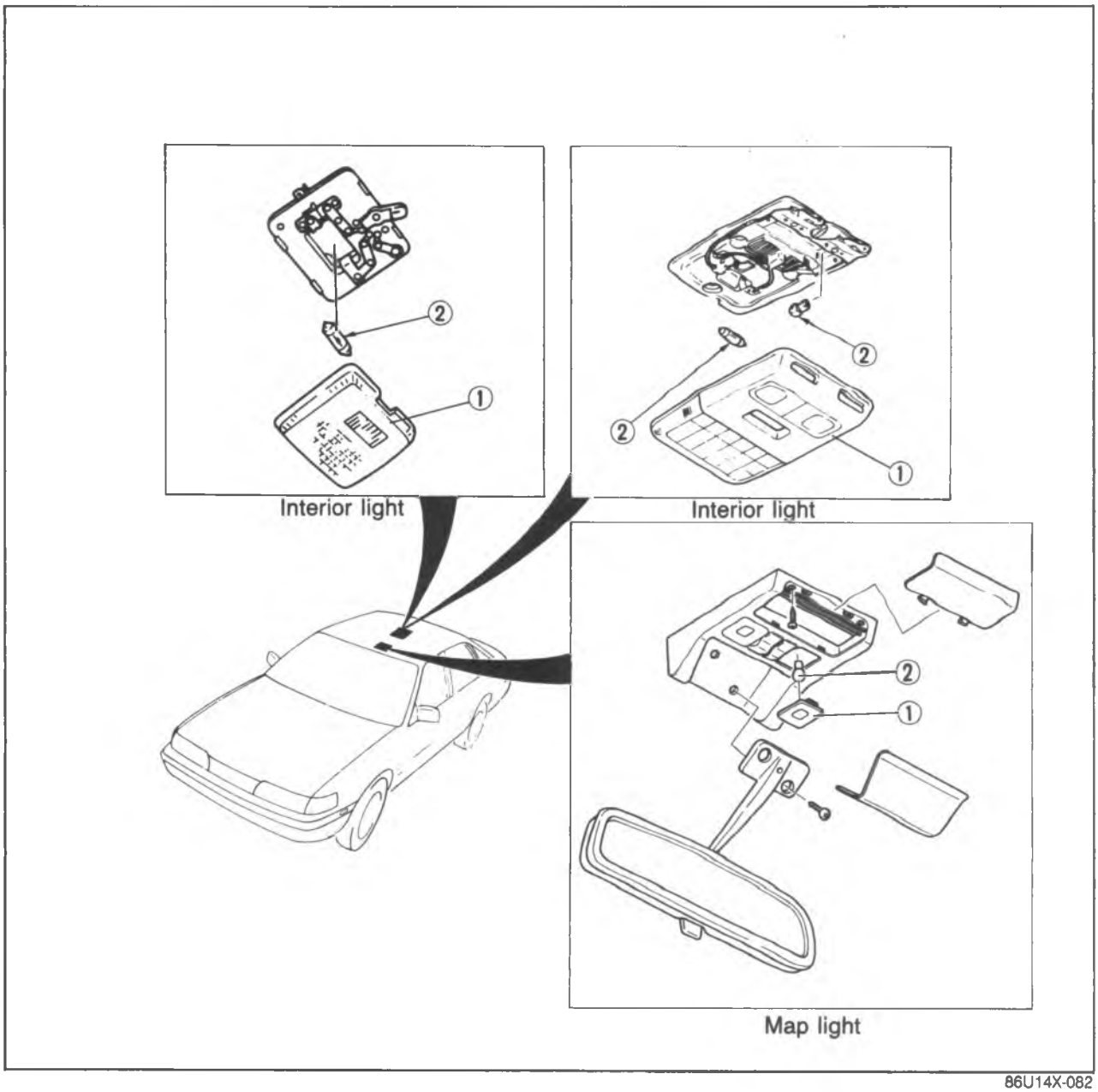

86U14X-082

Interior Light
1. Lens
2. Bulb 10W

Map Light
1. Lens
2. Bulb 8W

HIGH MOUNTED STOP LIGHT

REMOVAL AND INSTALLATION

1. Disconnect the negative battery cable.
2. Remove in the sequence shown in the figure.
3. Install in the reverse order of removal.

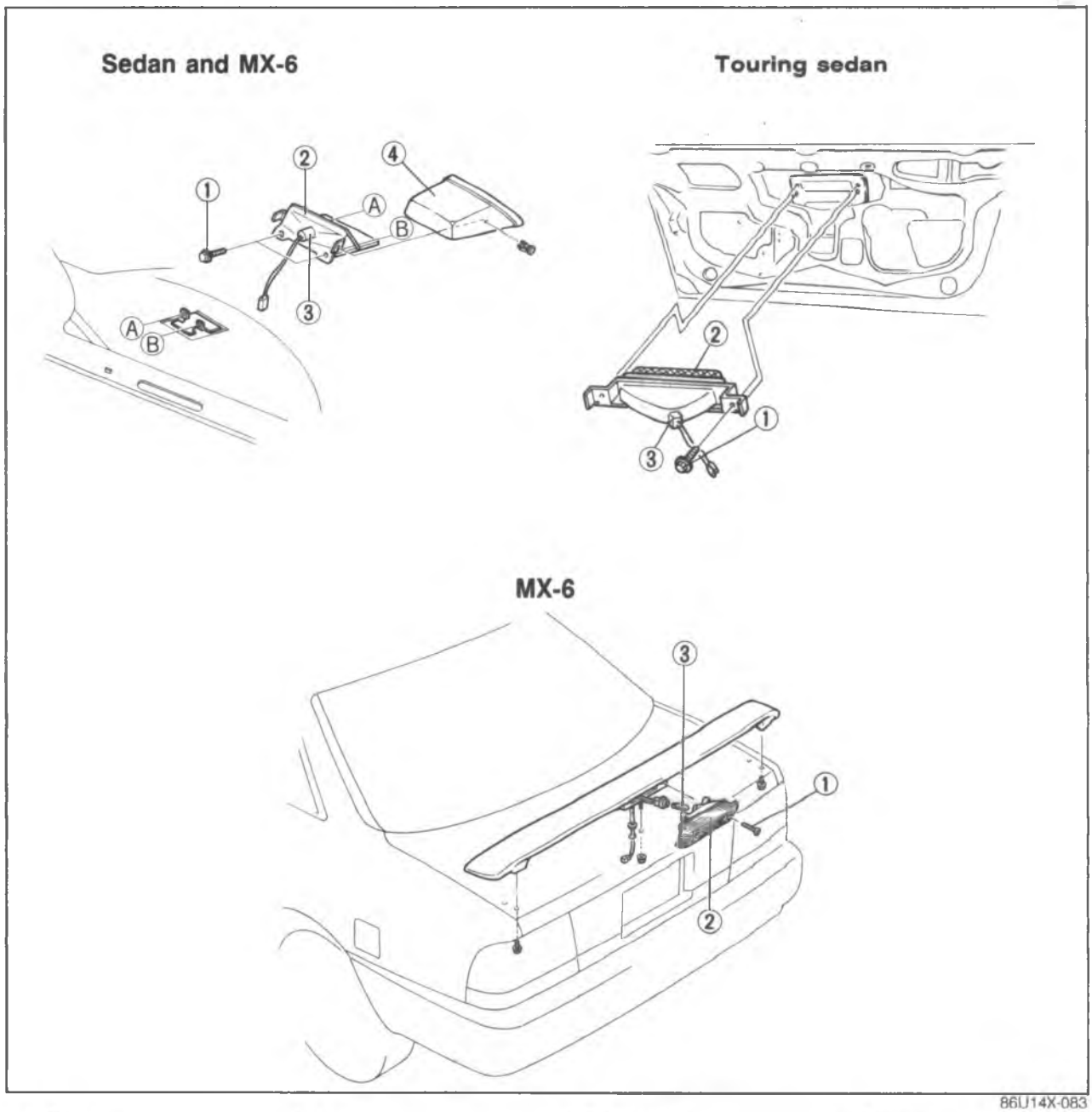

1. Screw
2. Lens
3. Bulb 18W
4. Cover

MOLDING AND GARNISH

STRUCTURAL VIEW

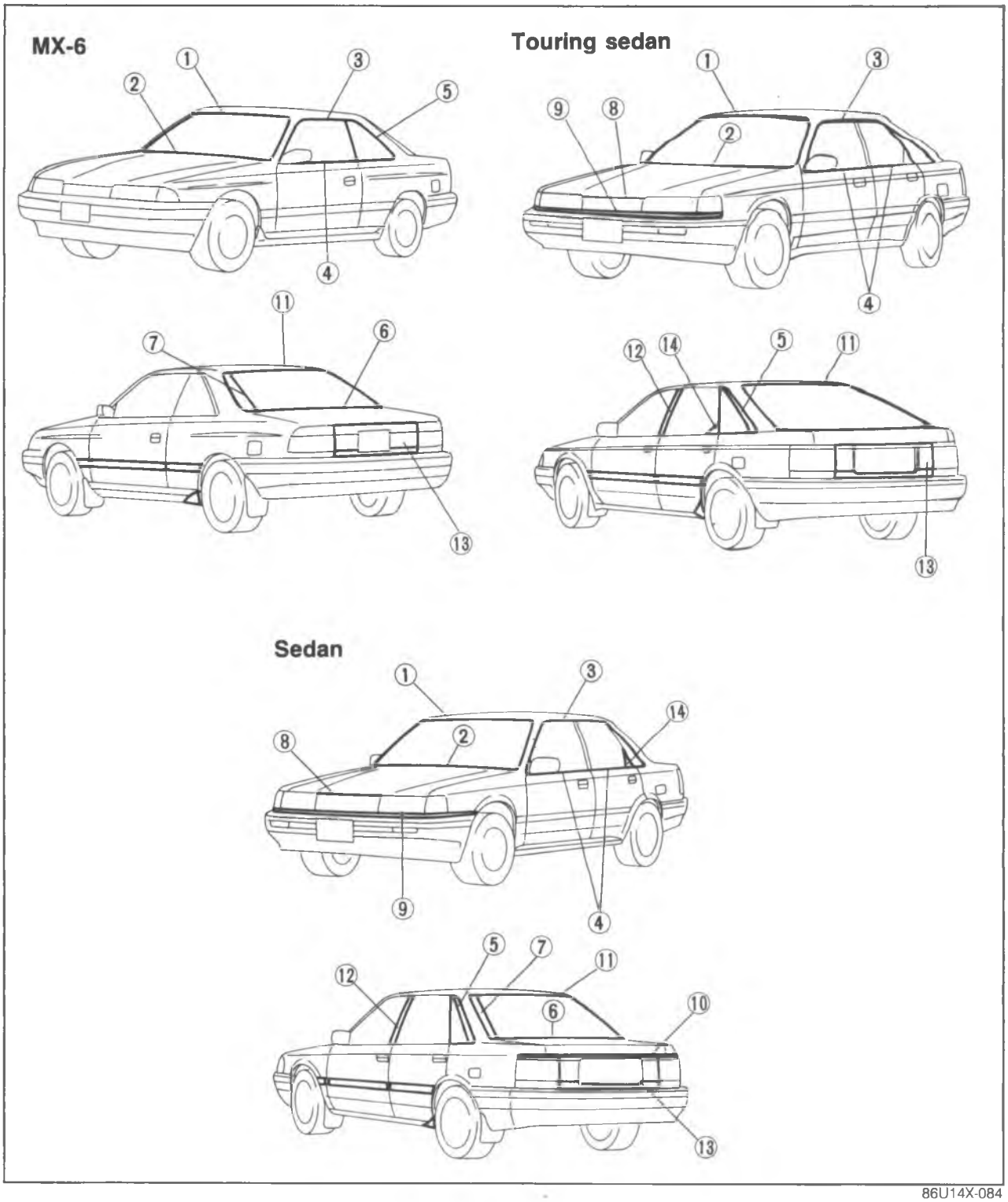

86U14X-084

1. Windshield molding
2. Windshield lower molding
3. Drip molding
4. Beltline molding
5. Quarter window molding
6. Rear window lower molding
7. Rear window side molding
8. Hood molding
9. Front lower molding
10. Trunk lid molding
11. Rear window upper molding
12. Center pillar garnish
13. Rear finisher
14. Sail garnish

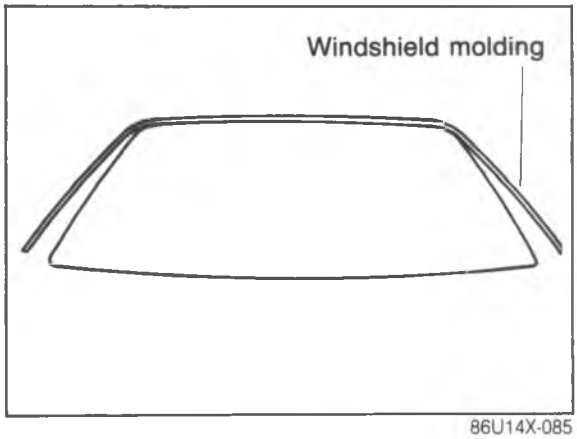

86U14X-085

WINDSHIELD MOLDING

Removal and Installation

1. Remove the windshield molding. (Refer to page 14—49)
2. Install the windshield molding. (Refer to page 14—52)

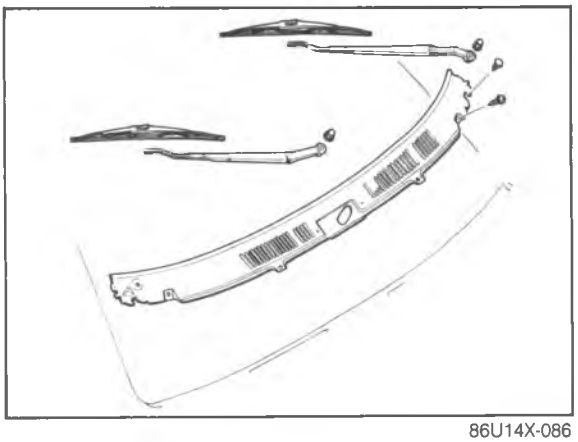
86U14X-086

WINDSHIELD LOWER MOLDING

Removal and Installation

1. Remove the wiper arms.
2. Remove the lower molding screws and the lower molding.
3. Install in the reverse order of removal.

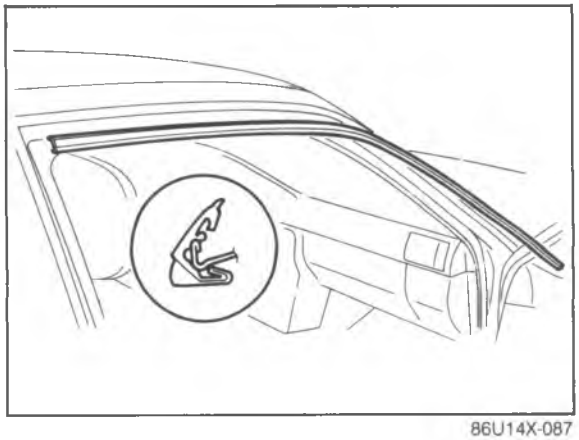
86U14X-087

DRIP MOLDING

Removal and Installation

1. Insert a screwdriver between the roof rail and drip molding and slightly loosen the end of the molding.

   Note
   Be careful not to scratch the molding.

2. Remove the molding by twisting upward with both hands.
3. Install in the reverse order of removal.

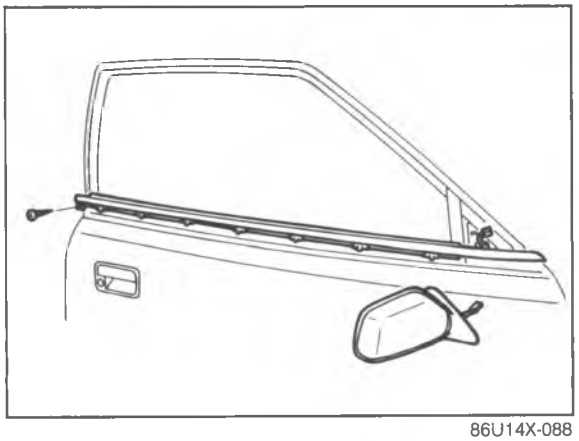
86U14X-088

BELTLINE MOLDING

Removal and Installation

1. Remove the door mirror.
2. Remove the screw from the end of the beltline molding, then pull the molding up to remove it.
3. Install in the reverse order of removal.

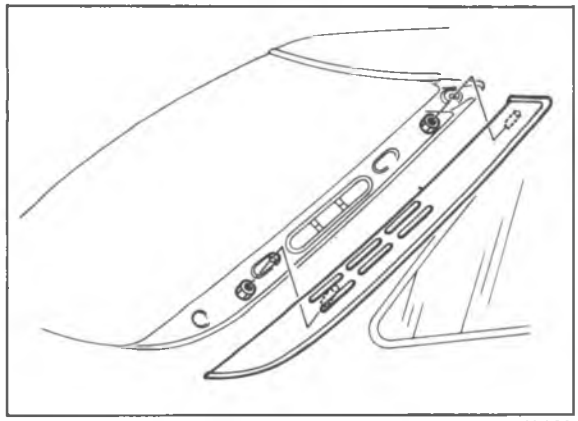

86U14X-089

REAR WINDOW SIDE MOLDING (SEDAN)

Removal and Installation

1. Remove the rear side seatback bolt, then the rear side seatback.
2. Remove the rear pillar trim.
3. Remove the window side molding nuts, then the window side molding.
4. Install in the reverse order of removal.

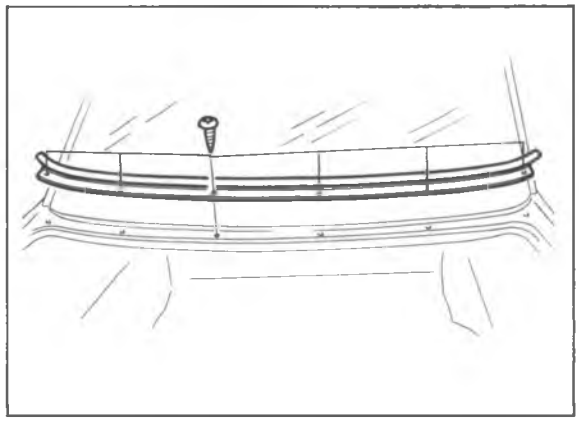

86U14X-090

REAR WINDOW LOWER MOLDING (SEDAN AND MX-6)

Removal and Installation

1. Remove the rear window lower molding screws, then the rear window lower molding.
2. Install in the reverse order of removal.

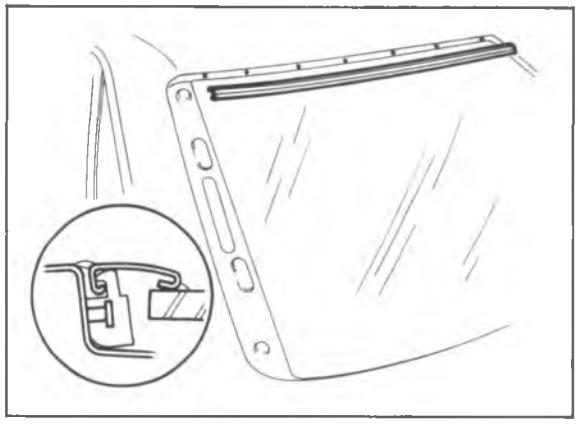

86U14X-091

REAR WINDOW UPPER MOLDING (SEDAN, TOURING SEDAN AND MX-6)

Removal and Installation

1. Remove the rear window side molding. (Refer to page 14—55)
2. Remove the rear window upper molding.
3. Install in the reverse order of removal.

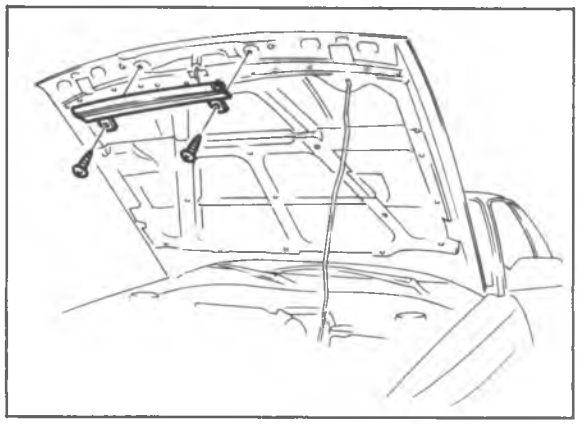

86U14X-092

HOOD MOLDING (SEDAN AND TOURING SEDAN)

Removal and Installation

1. Remove the hood molding screws, then the hood molding.
2. Install in the reverse order of removal.

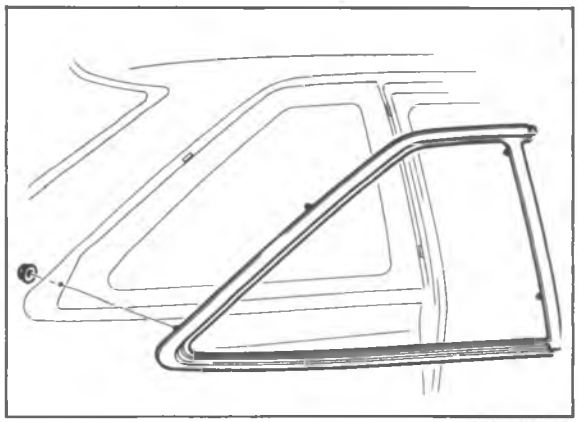

86U14X-093

QUARTER WINDOW MOLDING (MX-6)

Removal and Installation

1. Remove the seat belts.
2. Remove the rear header screw.
3. Remove the screws and the quarter trim.
4. Remove the screws and the center pillar trim.
5. Remove the quarter window molding mounting installation nuts.
6. Remove the screws and the quarter window molding.
7. Install in the reverse order of removal.

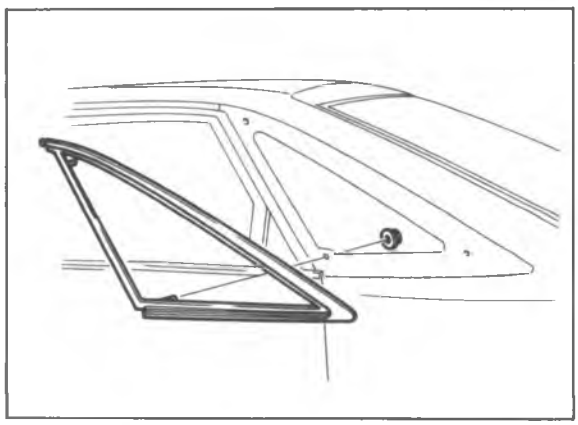

86U14X-094

QUARTER WINDOW MOLDING (TOURING SEDAN)

Removal and Installation

1. Remove the rear header screw.
2. Remove the bolt and the rear side seatback.
3. Remove the screws and the package side shelf.
4. Remove the screws and the rear pillar trim.
5. Remove the nuts and the quarter window molding.
6. Install in the reverse order of removal.

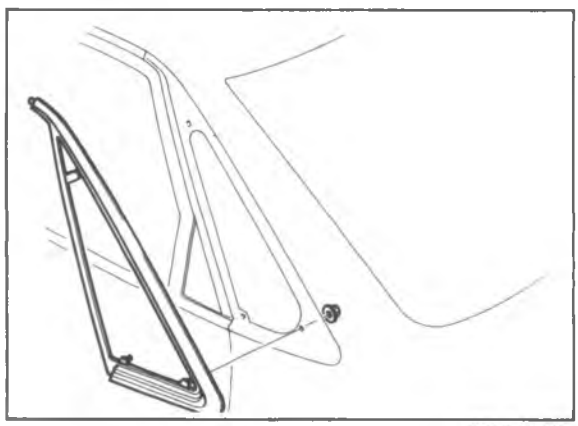

86U14X-095

QUARTER WINDOW MOLDING (SEDAN)

Removal and Installation

1. Remove the rear header screw.
2. Remove the bolt and the rear side seatback.
3. Remove the quarter trim.
4. Remove the nuts and the quarter window molding.
5. Install in the reverse order of removal.

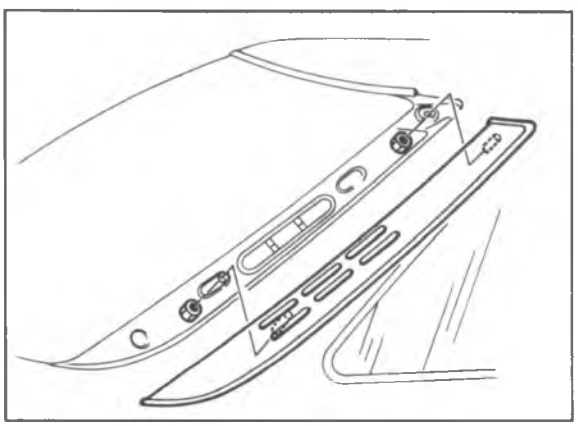

86U14X-096

REAR WINDOW SIDE MOLDING (MX-6)

Removal and Installation

1. Remove the seat belts.
2. Remove the rear header screw.
3. Remove the screws and the quarter side trim.
4. Remove the screws and the center pillar trim.
5. Remove the nuts and the rear window side molding.
6. Install in the reverse order of removal.

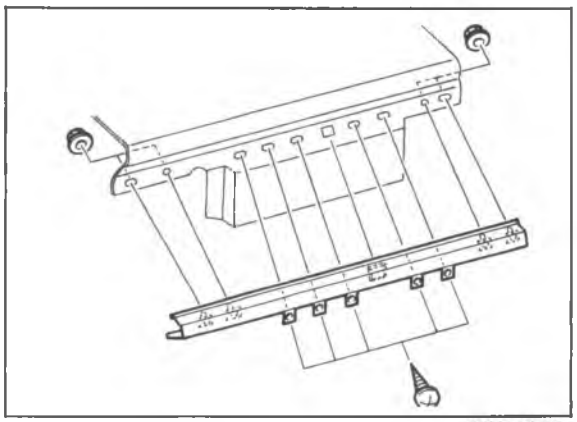

86U14X-097

TRUNK LID MOLDING (SEDAN AND TOURING SEDAN)

Removal and Installation

1. Remove the rear finisher.
2. Remove the nuts and screws and remove the trunk lid molding.
3. Install in the reverse order of removal.

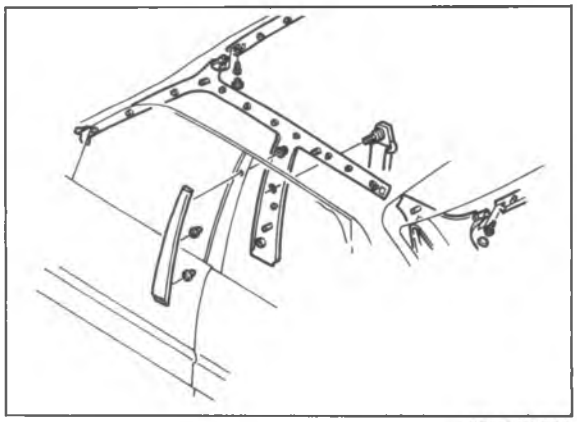

86U14X-098

CENTER PILLAR GARNISH (SEDAN AND TOURING SEDAN)

Removal and Installation

1. Remove the seat belts.
2. Remove the front header trim.
3. Remove the center pillar trim.
4. Remove the nuts with a deep socket wrench, then remove the garnish.
5. Install in the reverse order of removal.

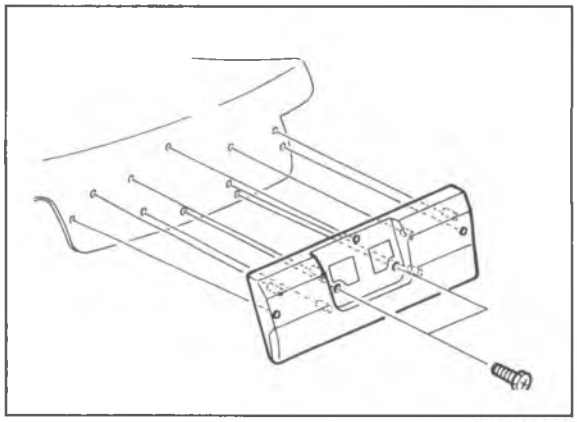

86U14X-099

REAR FINISHER (MX-6 AND SEDAN)

Removal and Installation

1. Remove the nuts and the rear finisher.
2. Install in the reverse order of removal.

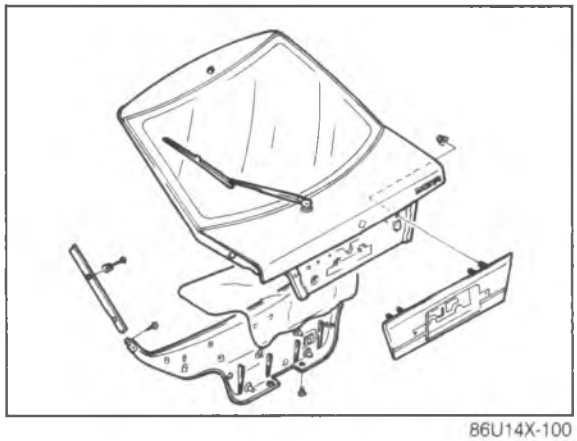

86U14X-100

REAR FINISHER (TOURING SEDAN)

Removal and Installation

1. Remove the hatchback door side trims.
2. Remove the hatchback door lower trim.
3. Remove the hatchback door screen.
4. Remove the nuts and the rear finisher.
5. Install in the reverse order of removal.

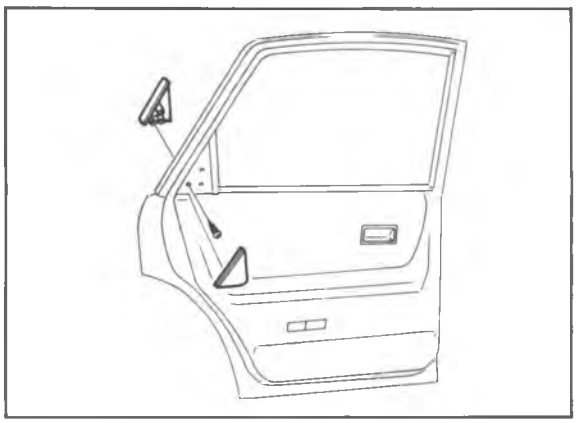

86U14X-101

SAIL GARNISH (SEDAN AND TOURING SEDAN)

Removal and Installation

1. Remove the sail inner garnish.
2. Remove the screws and remove the sail garnish.
3. Install in the reverse order of removal.

SIDE PROTECTOR MOLDING

Structural View

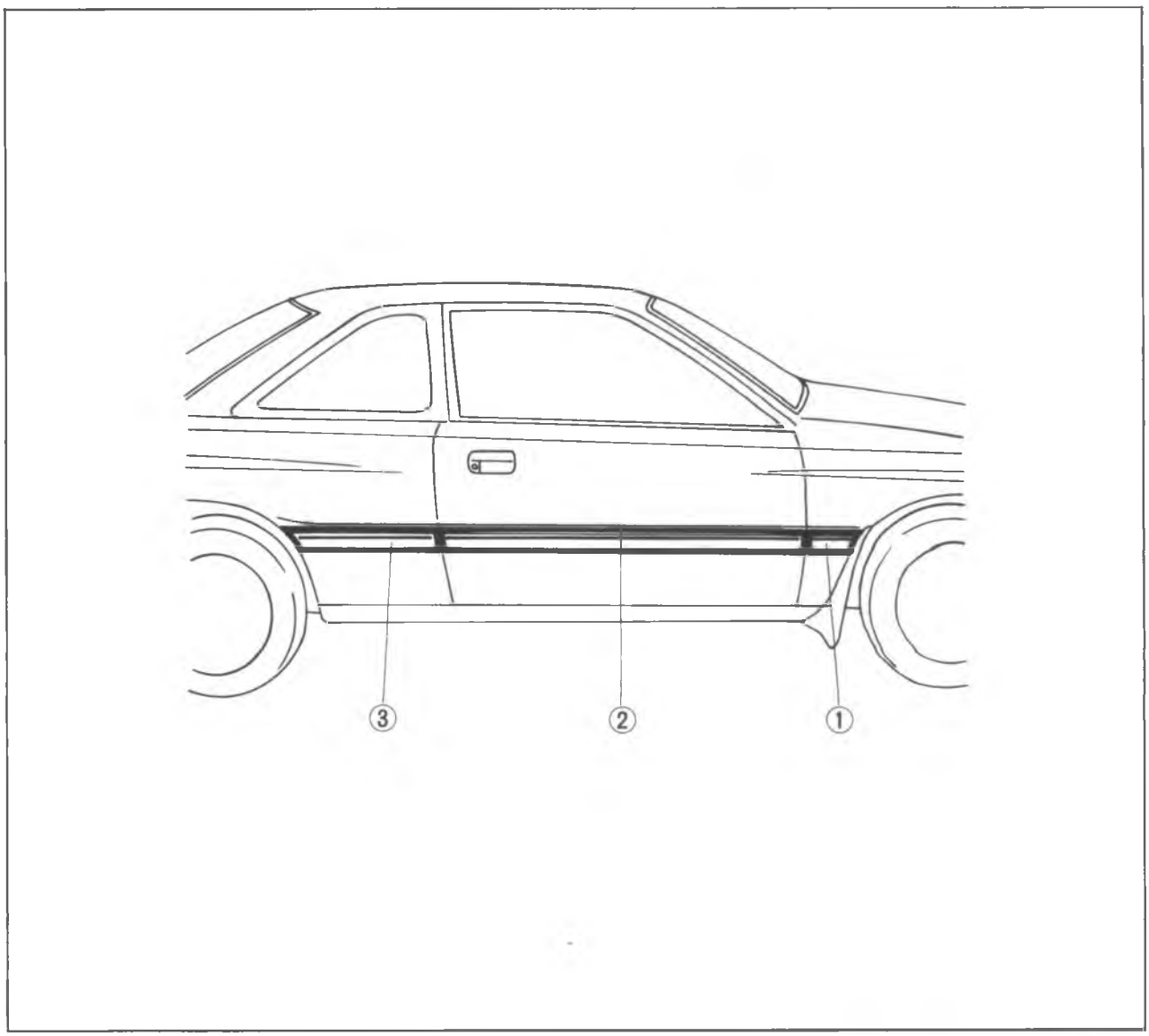

86U14X-102

1. Side protector A molding
2. Side protector B molding
3. Side protector C molding

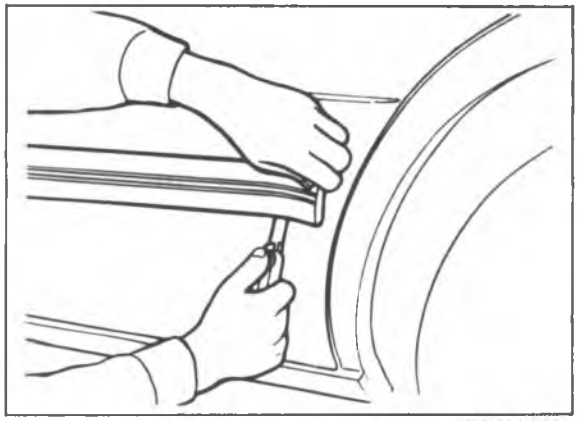

7BU14X-034

Removal

1. Using a screwdriver or knife, twist the molding end, being careful not to damage the painted surface, and separate the adhesive for **20—30 mm (0.79—1.18 in)**.
2. Pull the separated portion to remove it.
3. Use a knife to remove any adhesive remaining on the body or molding.

Note
Remove as much adhesive as possible without damaging the painted surface.

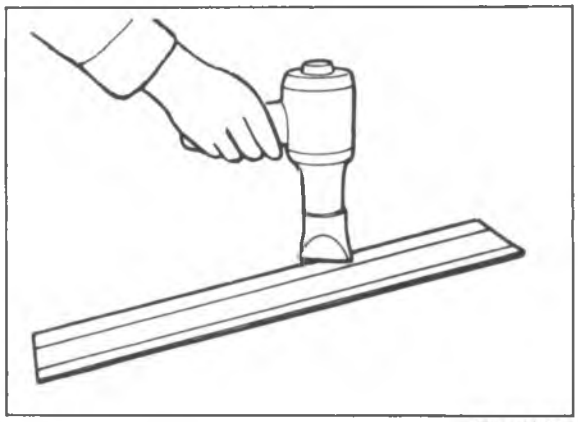

7BU14X-035

4. If the adhesive is difficult to remove, soften it with a hot air blower.

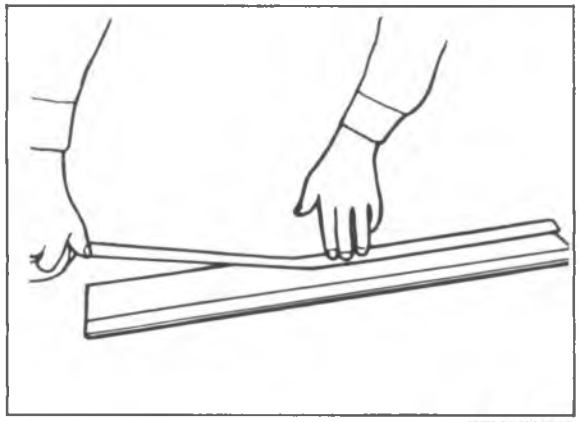

7BU14X-036

Installation

1. Remove any grease or dirt from the molding adhesion surface and the body surface.
2. Mark the installation position on the body with masking tape.
3. Attach double-sided adhesive tape to the molding adhesion surface.

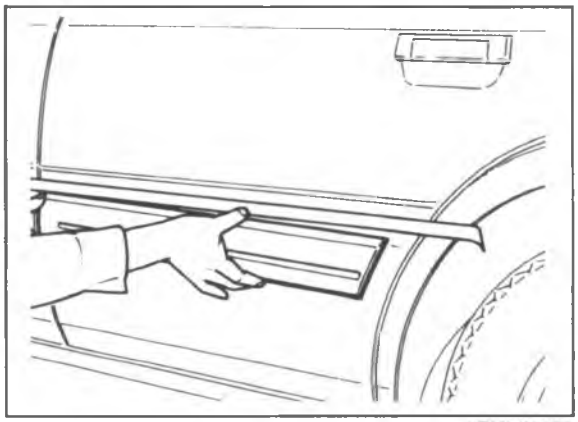

7BU14X-037

4. Align the molding on the body, and attach it securely.

Note
Adhesion conditions deteriorate if air temperature is 20°C (68°F) or less; heating of the body is thus recommended.

DOOR MIRROR

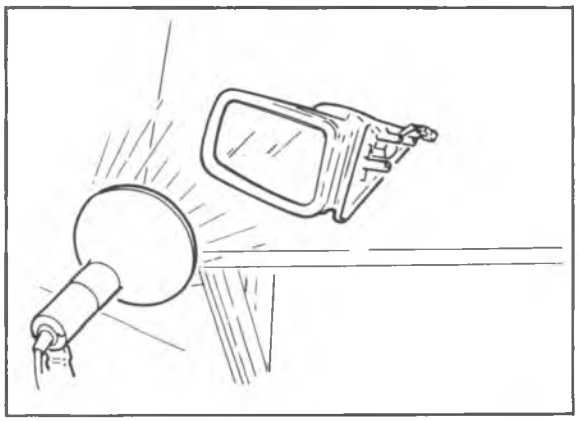

86U14X-103

DISASSEMBLY

1. Warm the frame and the mirror glass with a lamp (500W) to approx. 70°C (158°F) for approx. 3 minutes.

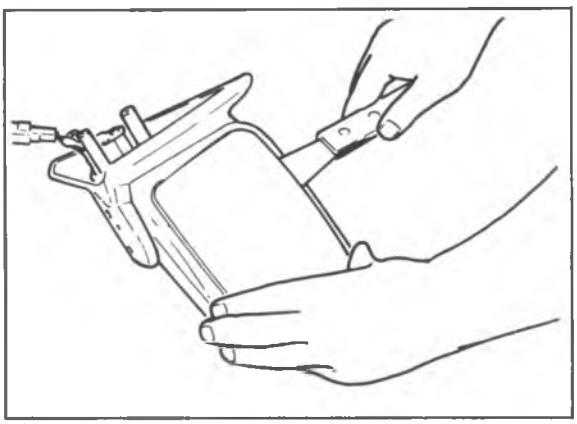

86U14X-104

2. Insert a scraper between the mirror glass and the frame, then pry the mirror loose.
3. Remove any remaining adhesive.

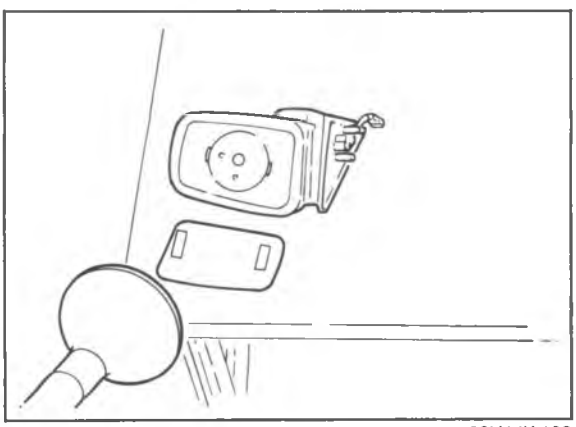

86U14X-106

ASSEMBLY

1. Warm the frame with a lamp.

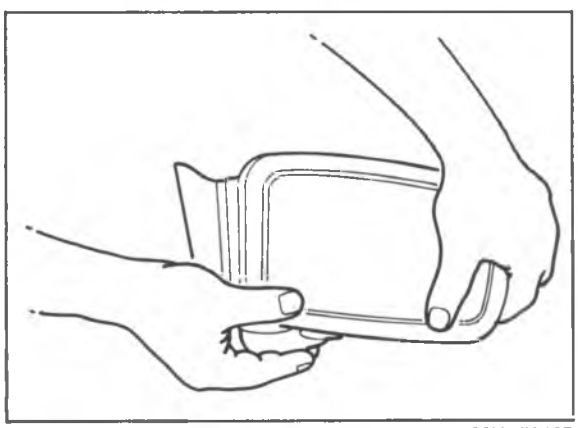

86U14X-107

2. Install the glass in the frame, then gently press it in to secure it.

TRUNK-LID LOCK REMOTE RELEASE

REMOVAL AND INSTALLATION

1. Remove in the sequence shown in the figure.
2. Install in the reverse order of removal.

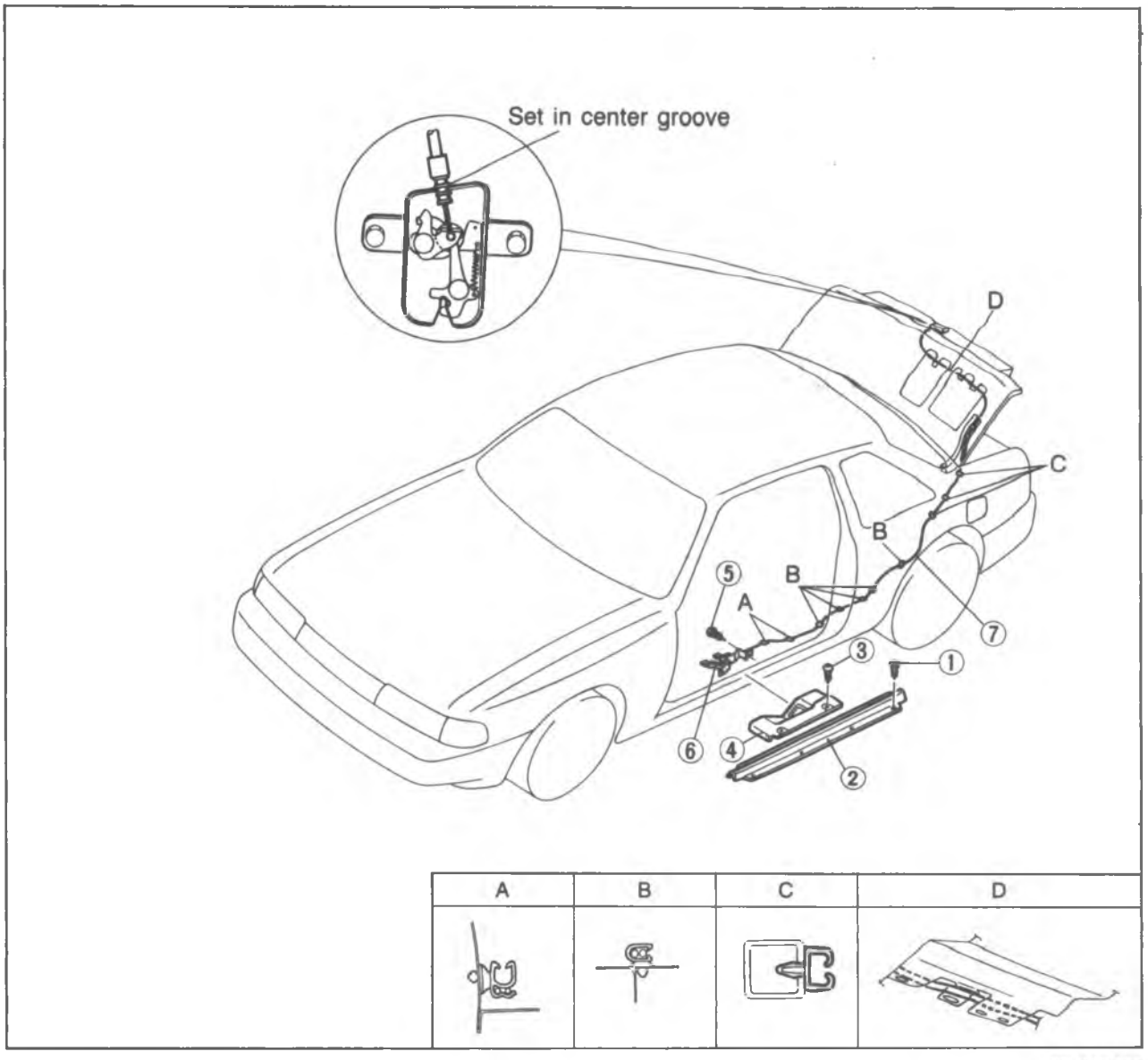

86U14X-108

1. Screws
2. Scuff plate
3. Screws
4. Cover
5. Bolts
6. Release lever
7. Release wire

FUEL FILLER LID REMOTE RELEASE

REMOVAL AND INSTALLATION

1. Remove in the sequence shown in the figure.
2. Install in the reverse order of removal.

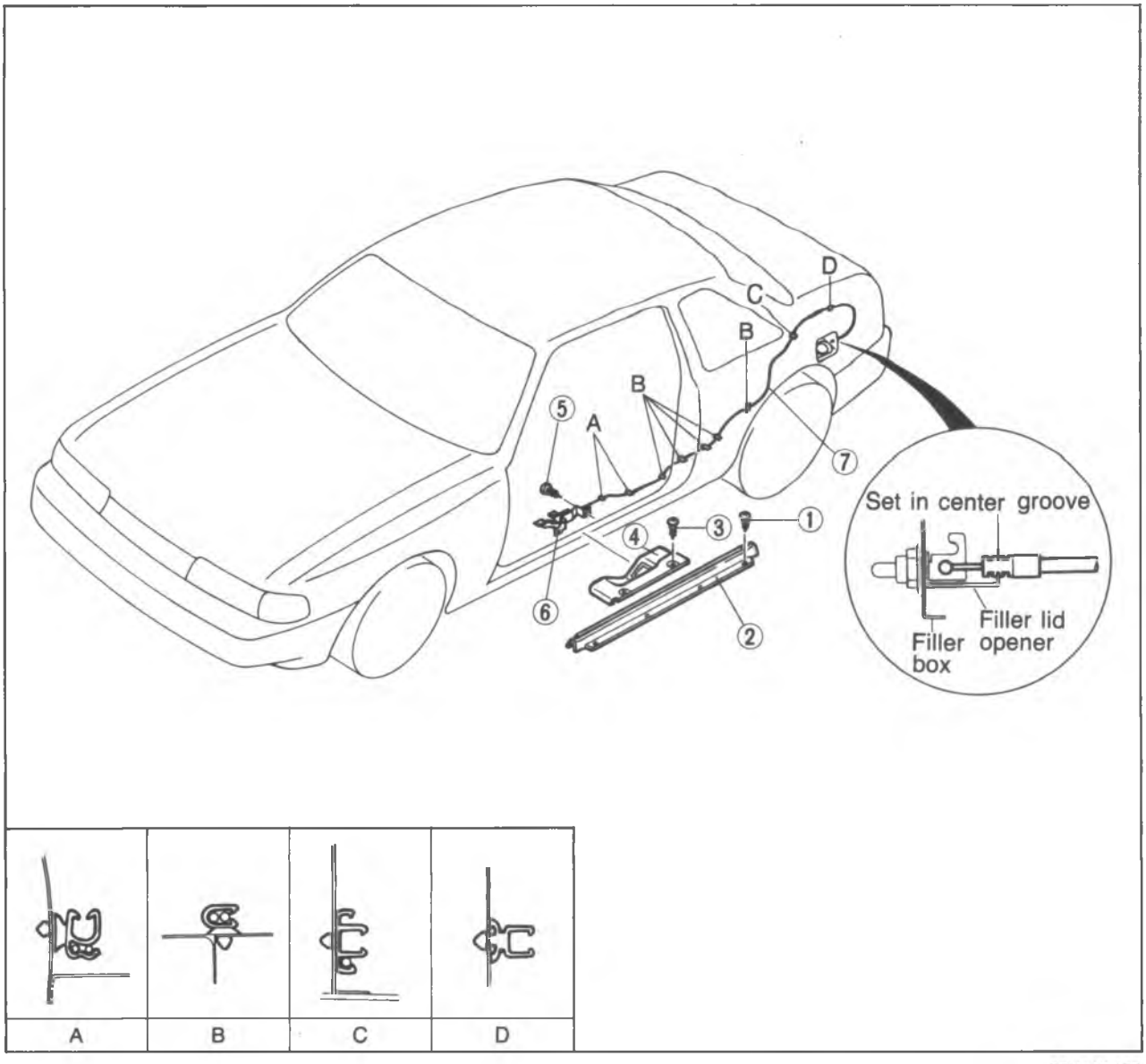

86U14X-109

1. Screws
2. Scuff plate
3. Screws
4. Cover
5. Bolts
6. Release lever
7. Release wire

WINDSHIELD GLASS

STRUCTURAL VIEW

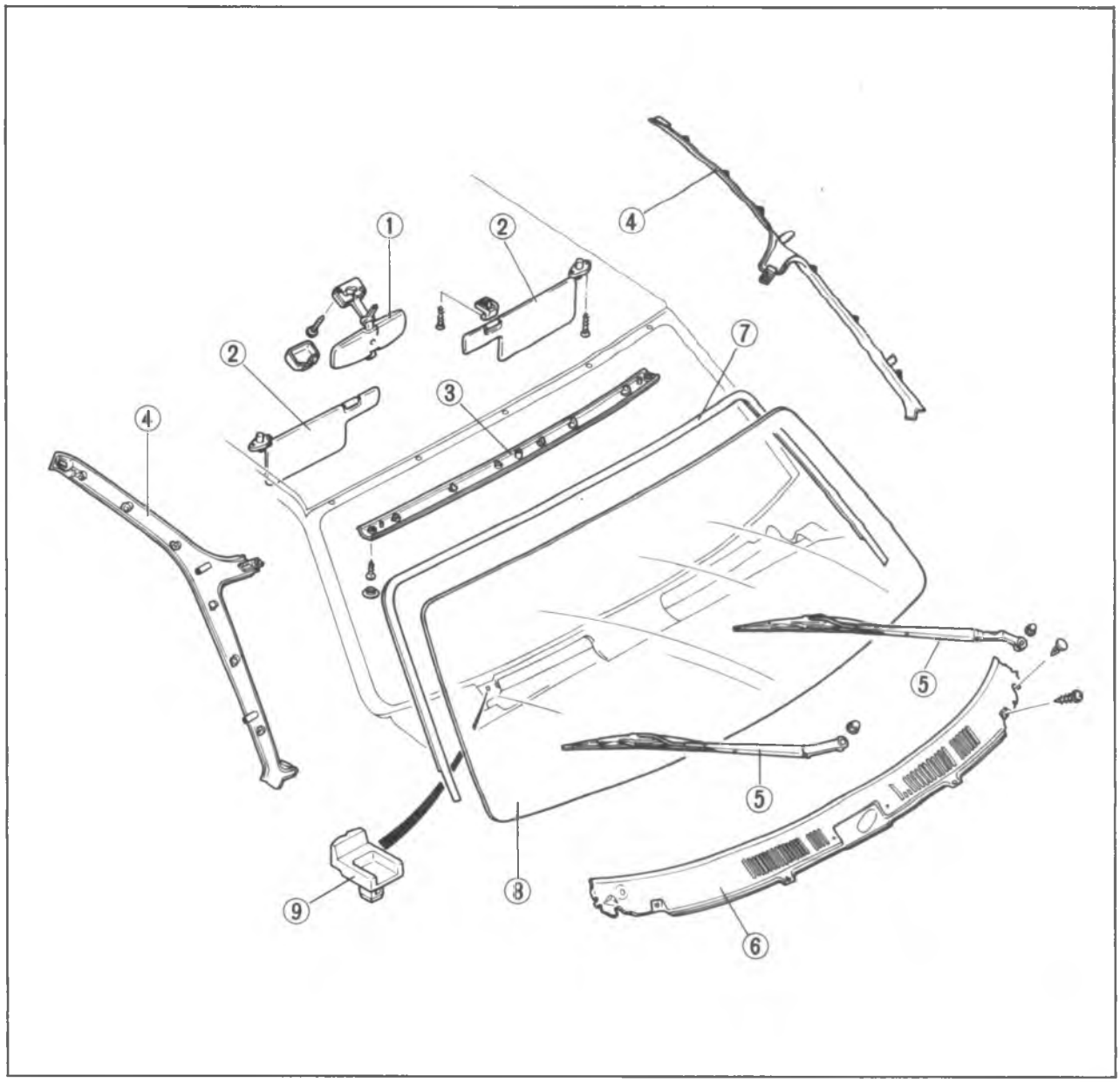

86U14X-110

1. Rear view mirror
2. Sunvisor
3. Front header trim
4. Front pillar trim
5. Wiper arm
6. Lower molding
7. Front windshield molding
8. Windshield glass
9. Spacer

Note
Use window tool set (49 0305 870A) to remove and install the glass.

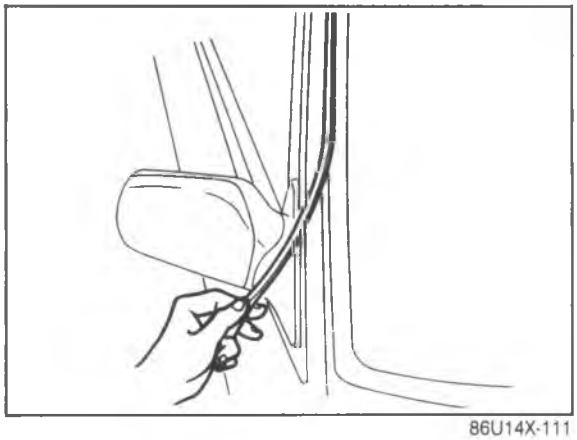

86U14X-111

REMOVAL

1. Remove the rearview mirror, sunvisors, front pillar trim, and front header trim.
2. Remove the wiper arms and lower molding.
3. Remove the front window molding.

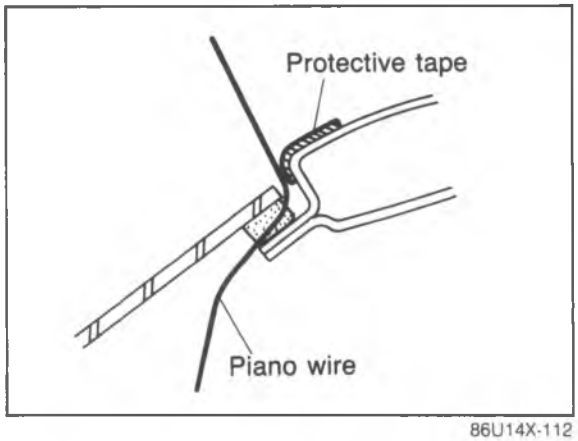

86U14X-112

Caution
Before removing the sealant, apply adhesive tape to the body and instrument panel to protect them from damage.

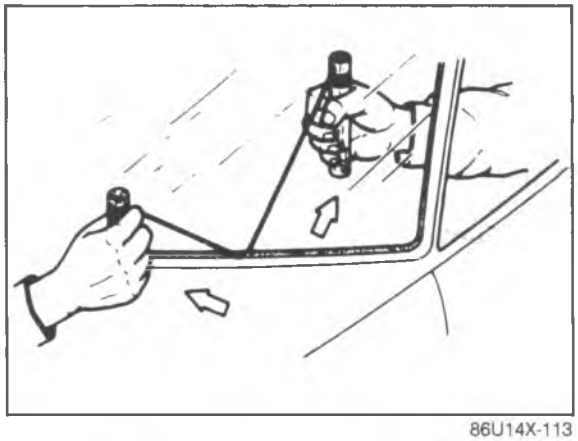

86U14X-113

4. Make a small hole through the sealant.
5. Pass the piano wire through the hole.
6. Wind each end of the wire around a bar.
7. Pull the wire to and fro, and saw through the sealant around the edge of the glass. Then remove the glass.

Caution
a) Use a long sawing action to spread the work over the whole length of wire to prevent it from breaking.
b) Be careful that the wire does not rub on the body or instrument panel.

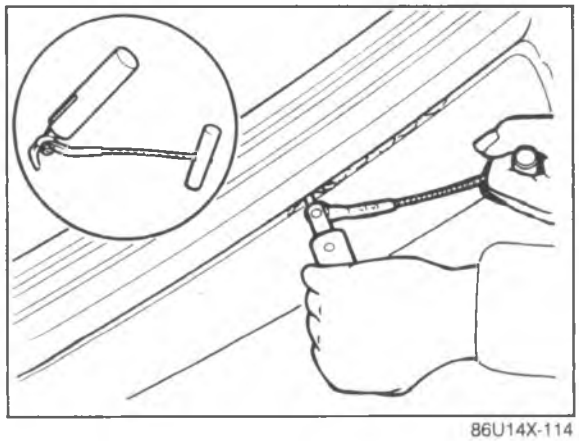

86U14X-114

Note
If the glass is not to be reused, a tool like that shown in the figure may be used.

Insert the blade in the sealant, and pull on the bars.

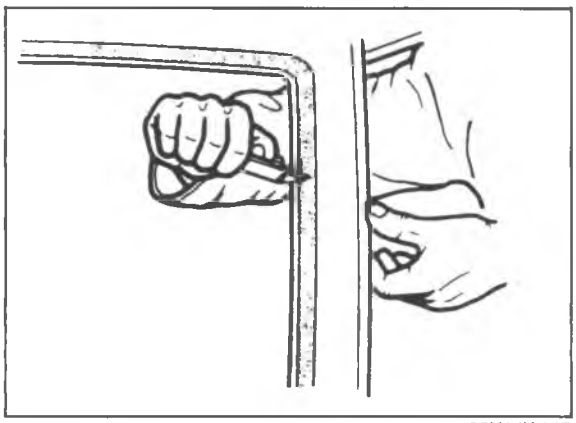

86U14X-115

INSTALLATION

1. Cut away the old sealant with a sharp knife so that **1 to 2 mm (0.04 to 0.08 in)** thickness of sealant remains around the circumference of the frame. If all the sealant has come off in any one place, apply some primer after degreasing, and allow it **30 minutes** to dry. Then put on new sealant to build up to a **2 mm (0.08 in)** layer.

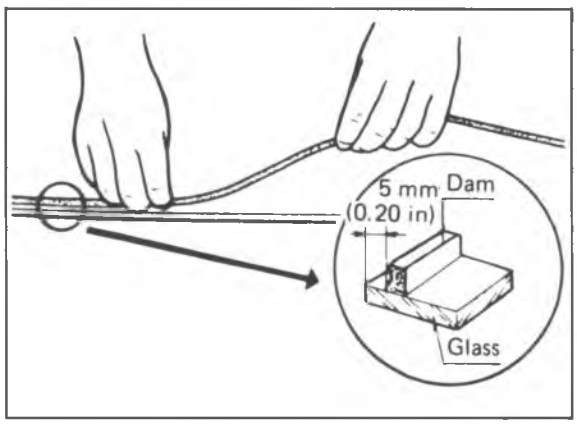

86U14X-116

2. Carefully clean a **5 cm (1.97 in)** wide area around the circumference of the glass and the bond on the body.
3. Bond a new dam along the circumference of the glass **5 mm (0.20 in)** from the edge.

Caution
Securely bond the dam and allow it to dry.

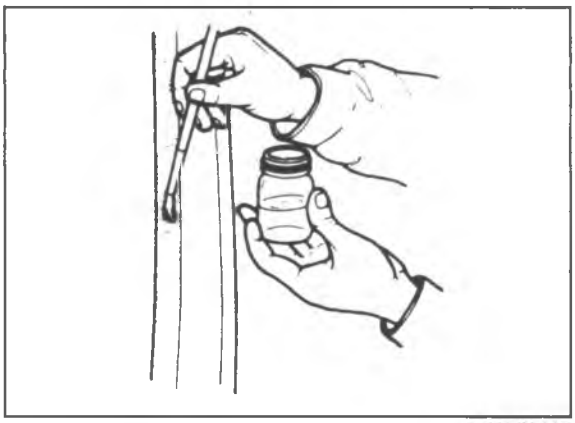

86U14X-117

4. Apply primer with a brush to the bonding area of the glass and the body, and allow it to dry for **approx. 30 minutes**.

Caution
Keep the area free of dirt. Do not touch the surface. If primer gets on the hands, remove it immediately.

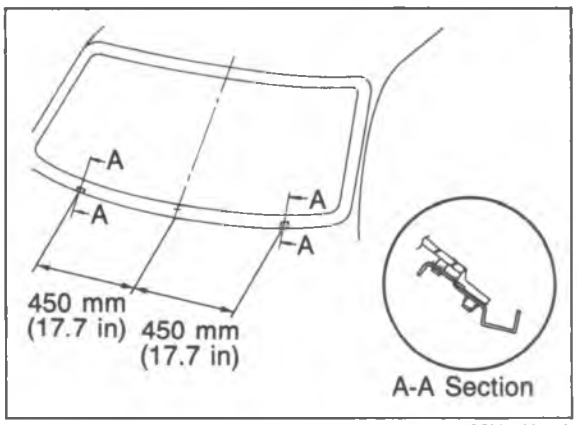

86U14X-118

5. Bond the spacers to the body as shown.

Caution
Damaged clips must be replaced.

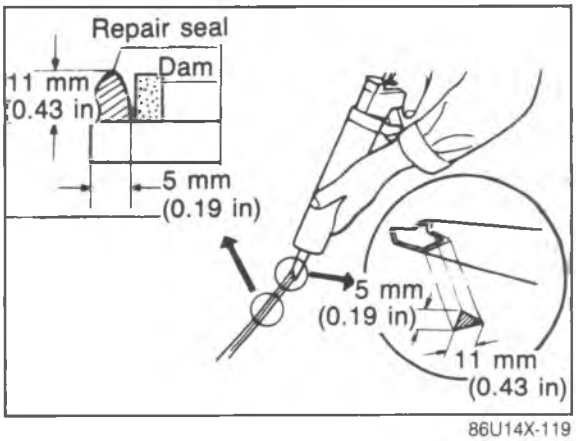

86U14X-119

6. Prepare the nozzle of the sealant gun so that it has a flange that can run along the edge of the glass, and a V from which the sealant can flow. Once the primer is dry, apply the sealant around the entire circumference to fill the gap between the dam and the edge of the glass with a ridge of sealant **11 mm (0.43 in)** high.
   Keep the bead of sealant smooth and even, reshaping it where necessary with a spatula.

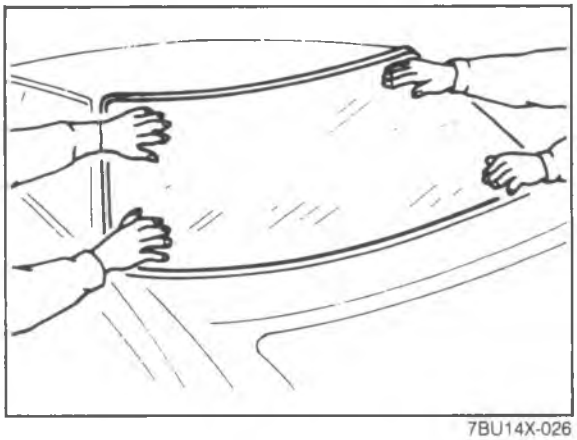
7BU14X-026

7. Lift the glass into place. Push it in lightly toward the vehicle to compress the sealant.

   Caution
   Open the windows to prevent the glass from being pushed out by air pressure if a door is closed.

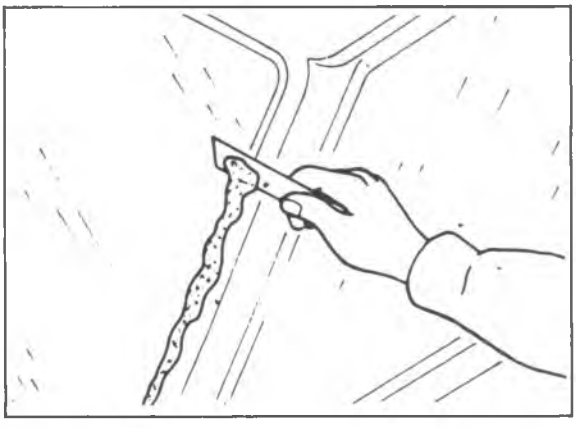

Hardening time of repair seal

Temperature	Surface hardening time	Time required until car can be put in service
5°C (41°F)	Approx. 1.5 hrs	12 hrs
20°C (68°F)	Approx. 1 hr	4 hrs
35°C (95°F)	Approx. 10 min.	2 hrs

8. Use a scraper to smooth away any sealant that oozes out. Add more sealant to any points of poor contact.

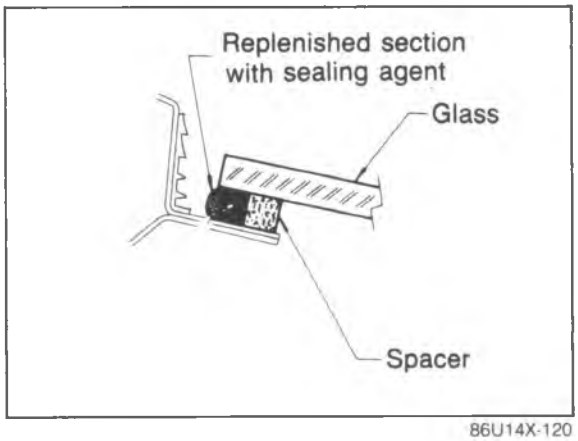

86U14X-120

9. Check for water leaks. If a leak is found, wipe the water off well and add **repair seal** (B001 77 739) where needed.

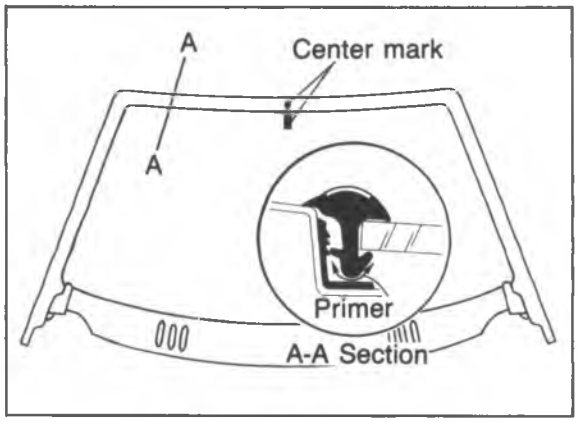

86U14X-121

10. Align the alignment mark of the molding with that on the lap of the glass and push the molding into place along the top.

Coution

a) Apply premer with a brush to the bonding area of the molding, and allow if to dry for approx. 30 minutes.

b) Use a new window molding

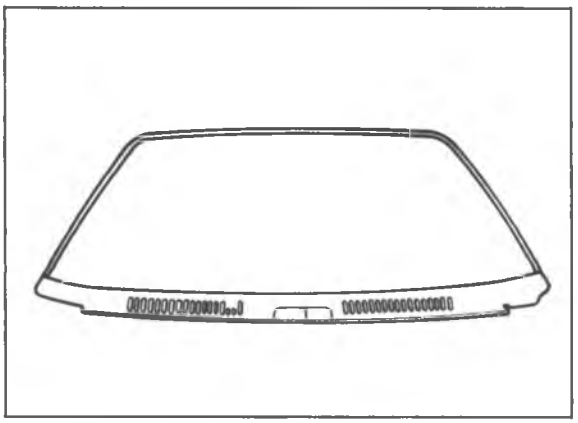

86U14X-122

11. Insert the molding ends into the flanges of lower moling. Then push it in the along sides.

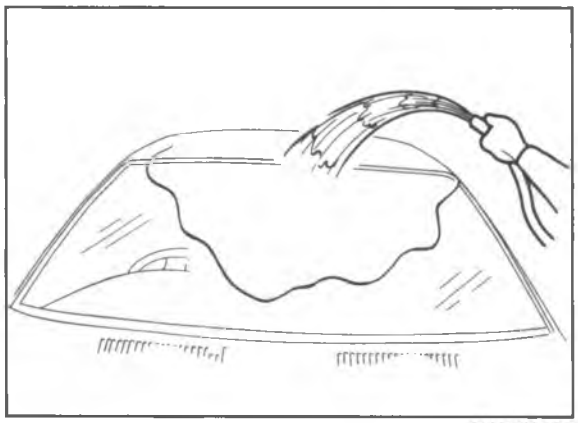

86U14X-123

12. After checking for water leakage, mount the pillar garnish.

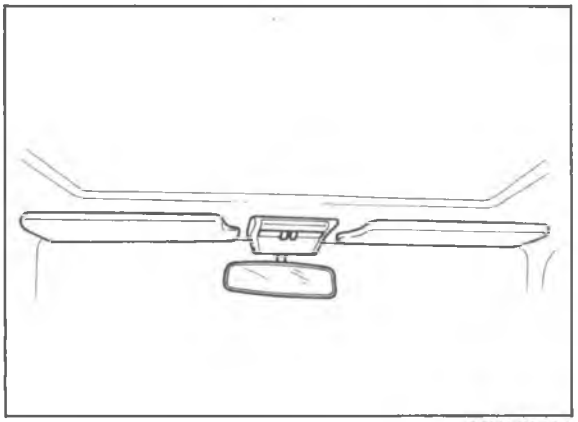

86U14X-124

13. Attach the front header trim, pillar trim, sunvisors, and rearview mirror.

REAR WINDOW GLASS

STRUCTURAL VIEW

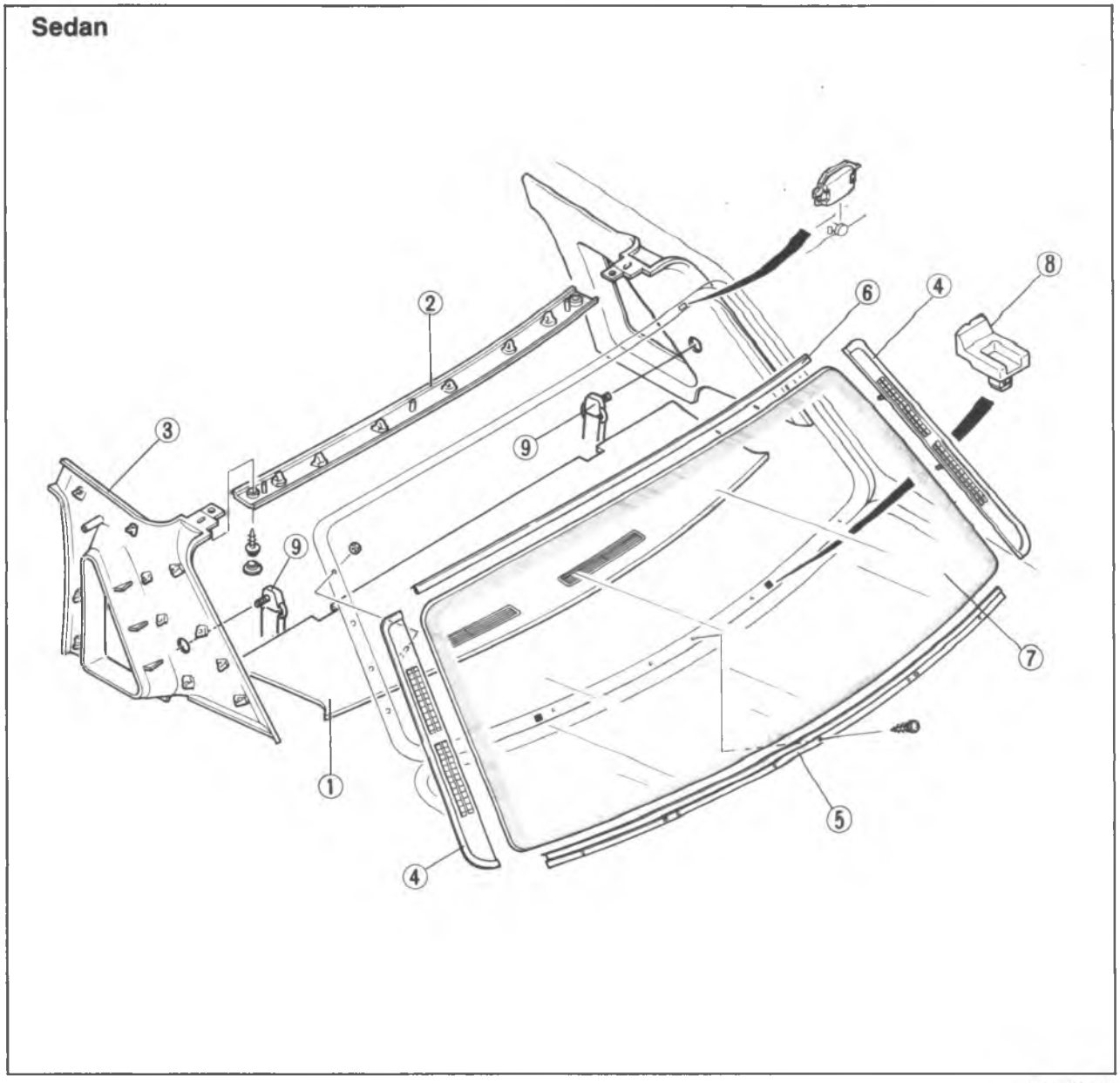

86U14X-125

1. Rear package tray
2. Rear header trim
3. Rear pillar trim
4. Rear window side molding
5. Rear window lower molding
6. Rear window upper molding
7. Rear window glass
8. Spacer
9. Seat belt bolts

Note
Use window tool set (49 0305 870A) to remove and install the glass.

MX-6

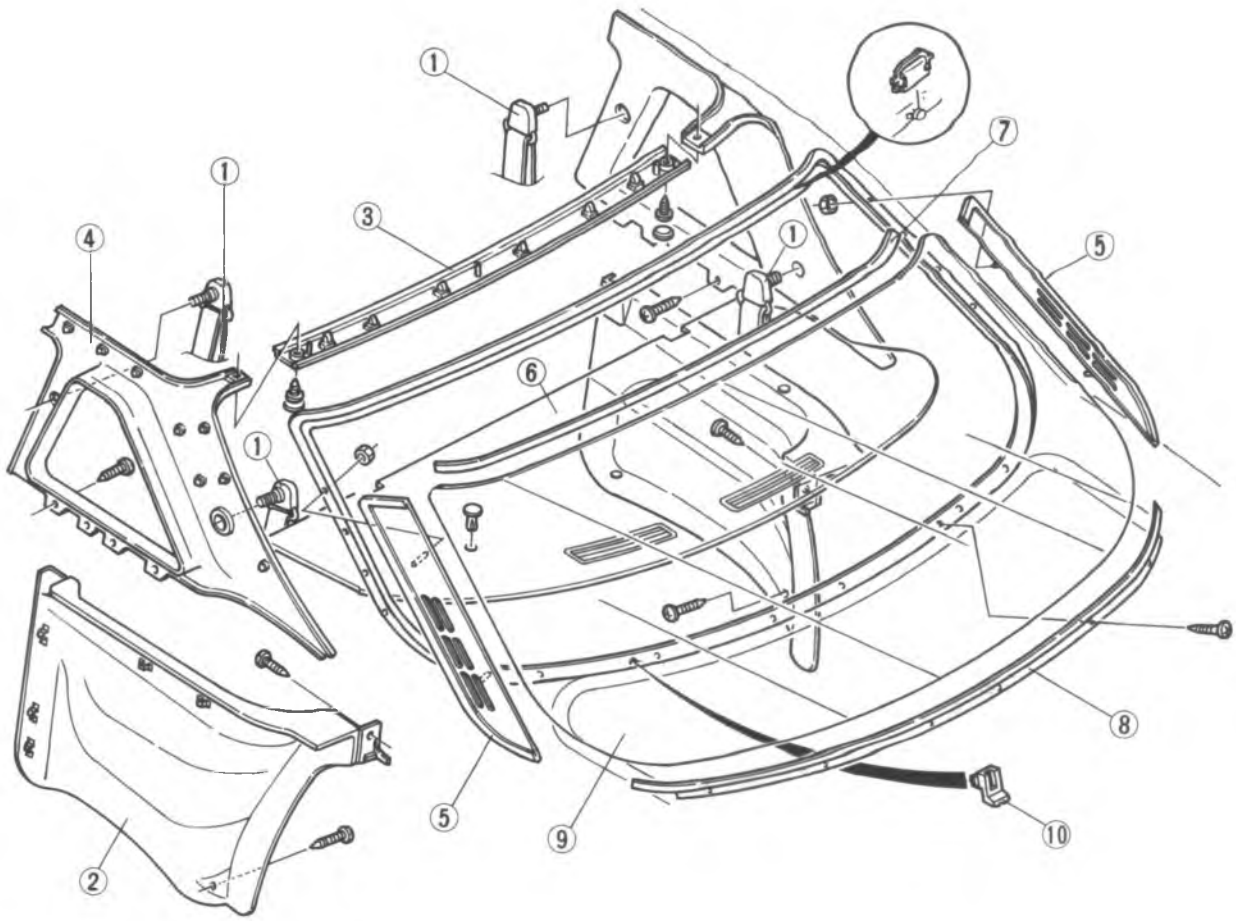

86U14X-126

1. Seat belt bolts
2. Rear side trim
3. Rear header trim
4. Rear pillar trim
5. Rear window side molding
6. Rear package tray
7. Rear window upper molding
8. Rear window lower molding
9. Rear window glass
10. Spacer

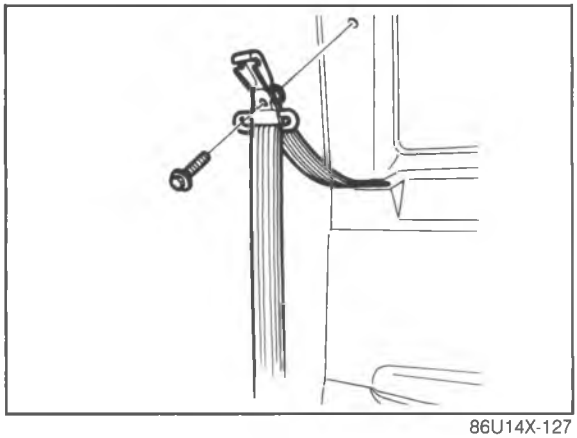
86U14X-127

REMOVAL

1. Disconnect the negative battery cable.
2. Disconnect the defogger connector.
3. Remove the seat belts.

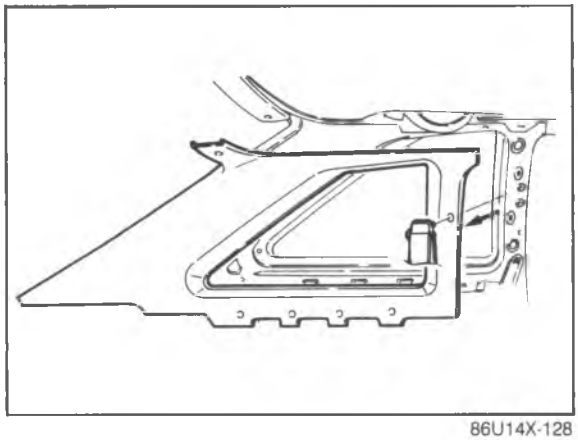
86U14X-128

4. Remove the screws and the quarter trim (MX-6).
5. Remove the screws and the center pillar trim.
6. Remove the screws and the rear header.

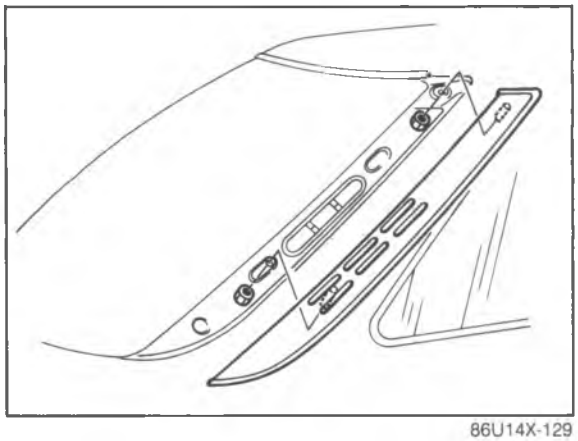
86U14X-129

7. Remove the nuts and the rear window side molding.

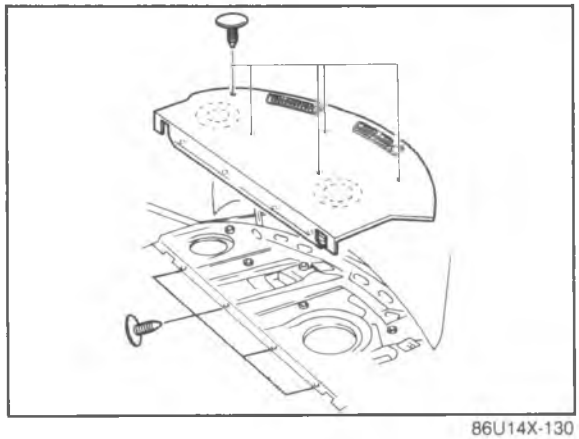
86U14X-130

8. Remove the fasteners, and the rear package tray.

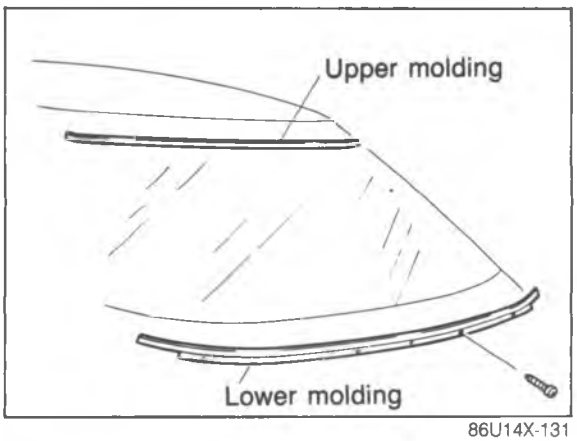

86U14X-131

9. Remove the lower and upper window molding.

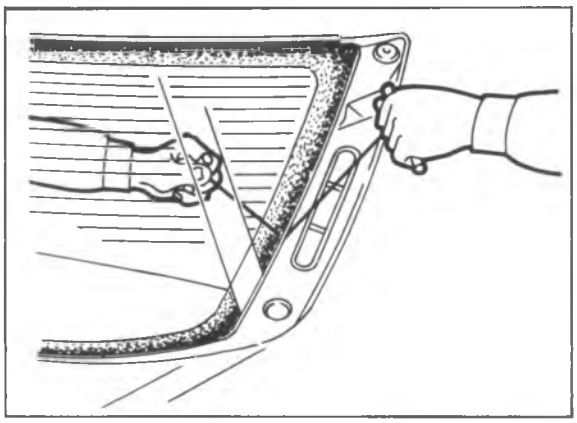
86U14X-132

10. Use an awl to make a hole in the sealant. Pass the end of a piece of the piano wire **(about 40 cm 15.7 in)** through the hole, and attach bars to both ends.
11. Apply protective tape along the edge of the body to the glass as shown.
12. Two people should hold the bars, one inside and one outside the vehicle, and then "saw" the sealant from around the glass.
13. Remove the glass from the body.

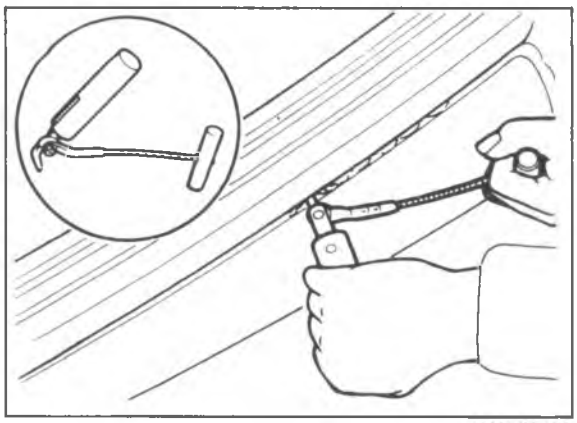
86U14X-133

Caution
a) Cut along the border between the glass and the sealant.
b) If too much heat develops, the piano wire may break, so cool it occasionally or don't work on one place too long.
c) If the glass is not to be reused, a tool like that shown in the figure is faster than piano wire.

Insert the blade in the sealant, pull on the bars, and cut the sealant.

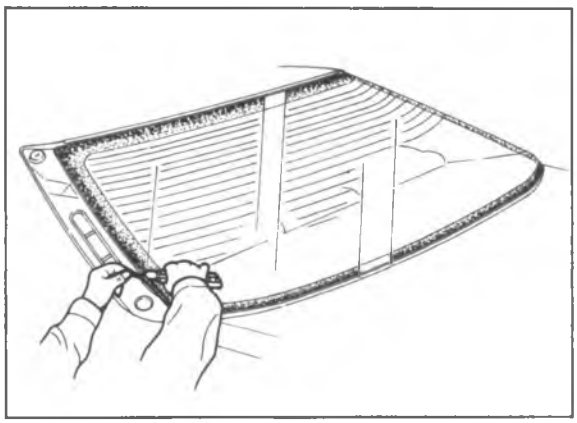
86U14X-134

INSTALLATION

1. Use a knife to smoothly trim the sealant on the body. Leave a layer about **1 or 2 mm (0.04 to 0.08 in)** thick.

Caution
If some sealant flakes off, use new sealant to patch it.

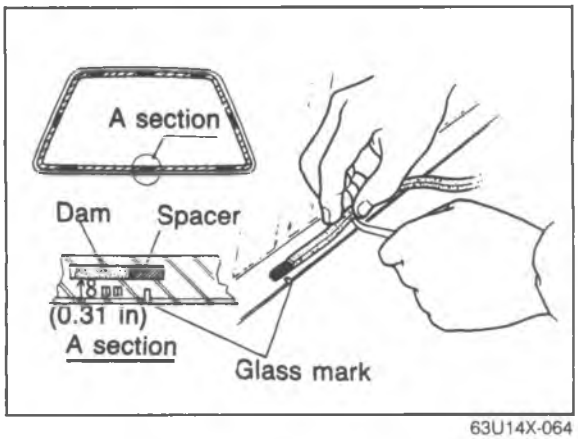

63U14X-064

2. Carefully clean and remove any grease from a **5 cm (1.97 in)** wide area around the circumference of the glass and the remaining bond on the body.
3. Bond a dam along the circumference of the glass **8 mm (0.31 In)** from the edge.

Caution
Securely bond the dam and let it dry.

63U14X-065

4. Apply primer with a brush to the circumference of the glass and the body and it them to naturally dry for 20 to 30 minutes.

Caution
Be sure not to allow dirt, water, oil, or similar materials to come into contact with the coated surfaces, and do not touch them by hand.

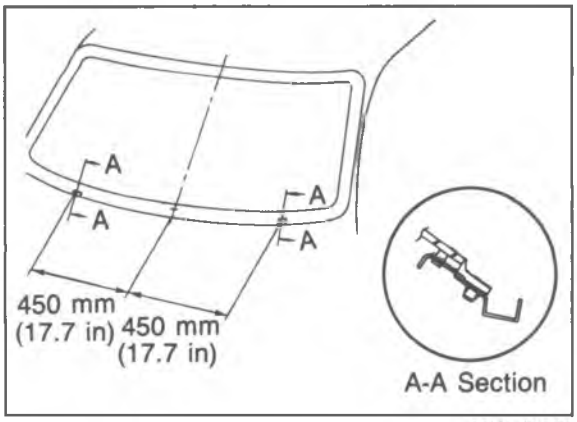

63U14X-066

5. Install the spacers at the positions shown in the figure.

Caution
Spacer with flaws must be replaced.

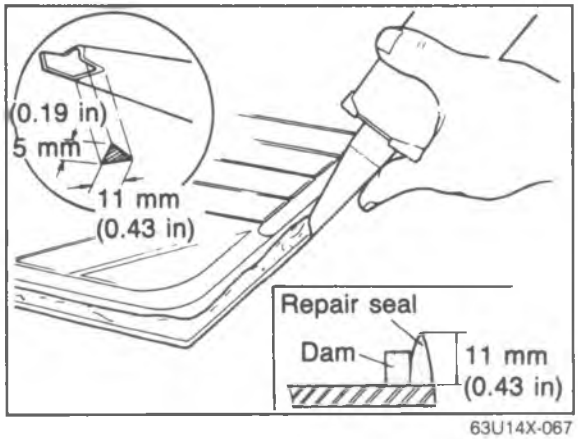

63U14X-067

6. When the primer has dried, apply an **11 mm (0.43 in)** thick bead of **repair seal** (B001 77 739) **11 mm (0.43 In)** from the periphery of the window glass using a sealant gun.

Caution
Cut the nozzle of the repair seal cartridge as illustrated in the figure.
If necessary, smooth the repair seal to correct any irregularities.

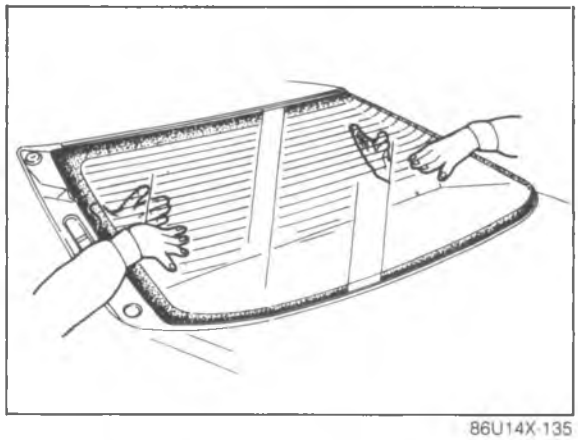

86U14X-135

7. Attach the rear window glass to the body.

Caution
Keep the door glass open until the repair seal hardens to some degree to prevent pressure from being exerted on the rear glass if the door is closed quickly.

Hardening time of repair seal

Temperature	Surface hardening time	Time required until car can be put in service
5°C (41°F)	Approx. 1.5 hrs	12 hrs
20°C (68°F)	Approx. 1 hr	4 hrs
35°C (95°F)	Approx. 10 min.	2 hrs

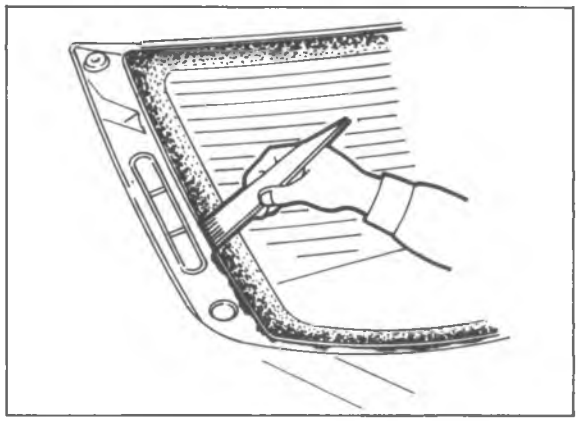

63U14X-069

8. Remove any excess or add repair seal where necessary.

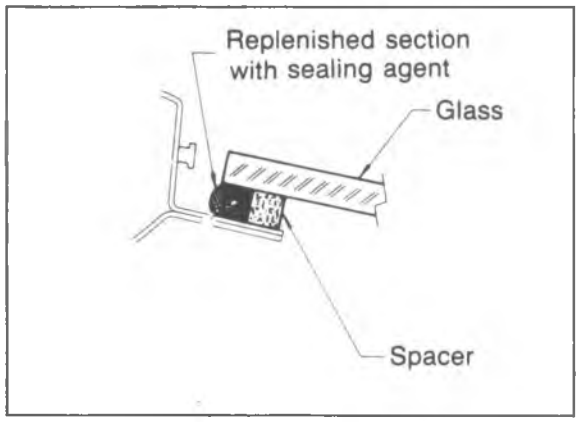

63U14X-070

9. Check for water leaks. If a leak is found, wipe the water off well and add **repair seal** (B001 77 739).

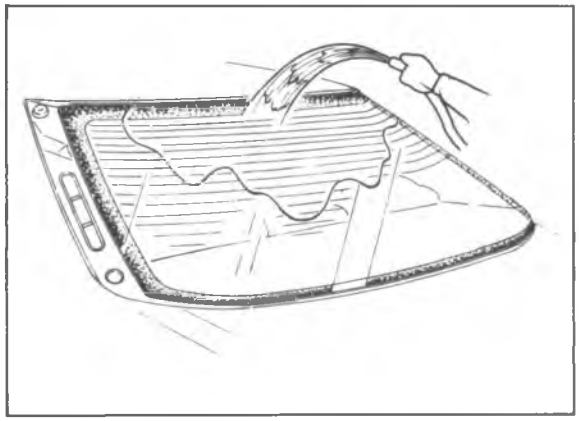

86U14X-136

10. After checking for water leakage, install the molding and trim.
11. Connect the defroster connector.

REAR HATCH GLASS

STRUCTURAL VIEW

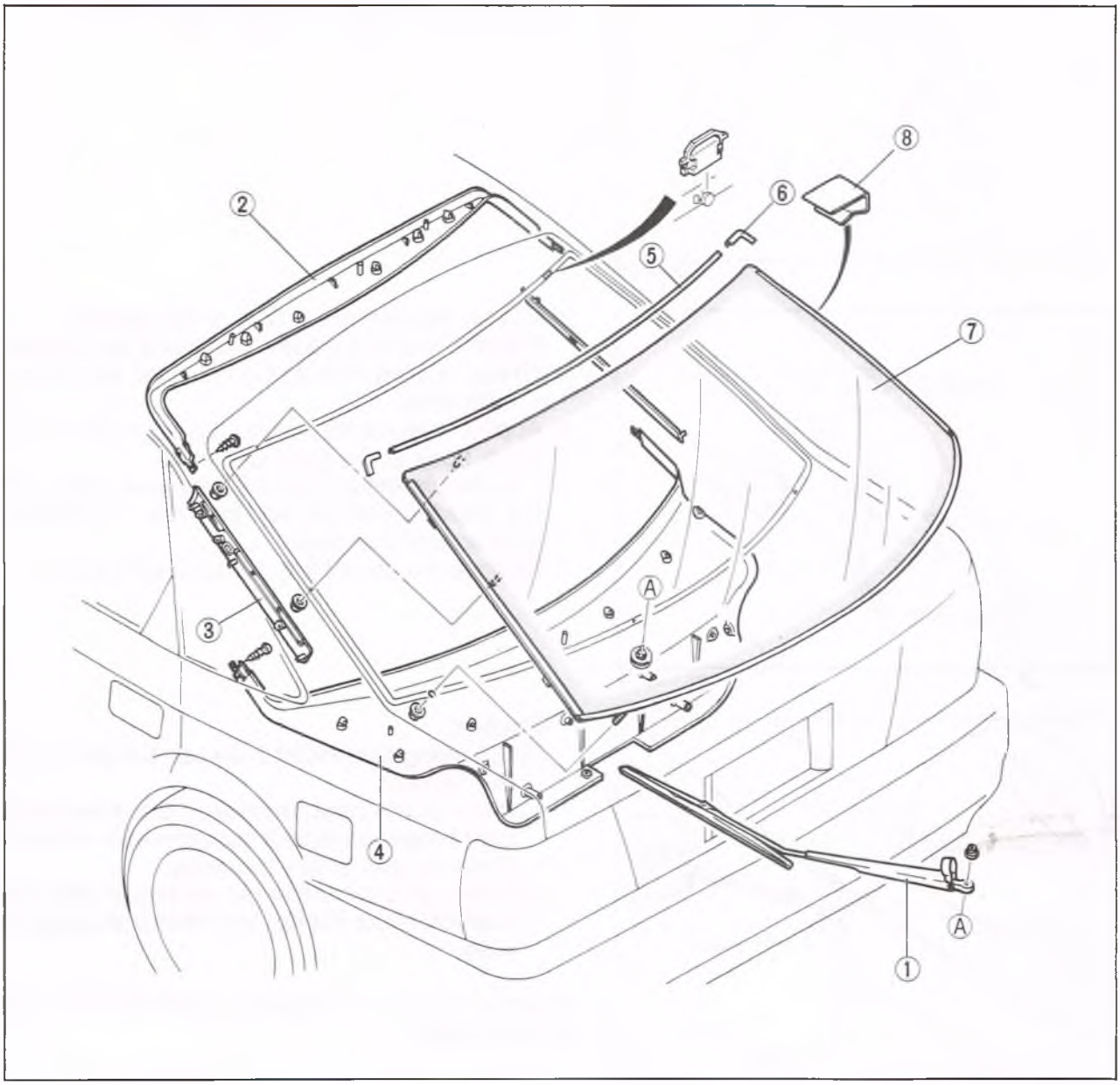

86U14X-137

1. Rear wiper arm
2. Upper trim
3. Side trim
4. Lower trim
5. Window upper molding
6. Window upper molding joint
7. Rear hatch glass
8. Clips

Note
Use window tool set (49 0305 870A) to remove and install the glass.

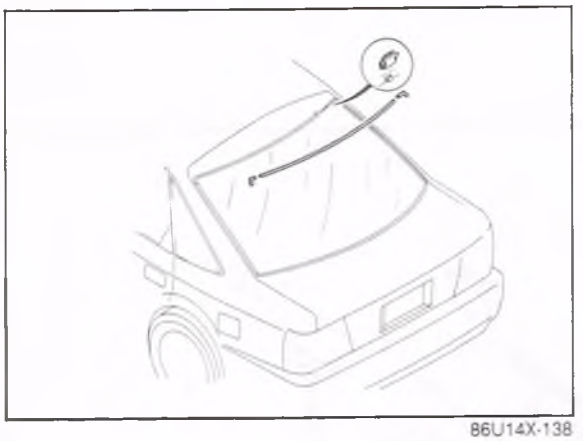

86U14X-138

REMOVAL

1. Remove the wiper arm, rear hatch trim and defogger connector.
2. Remove the rear window upper molding.
3. Remove the glass mounting nuts.

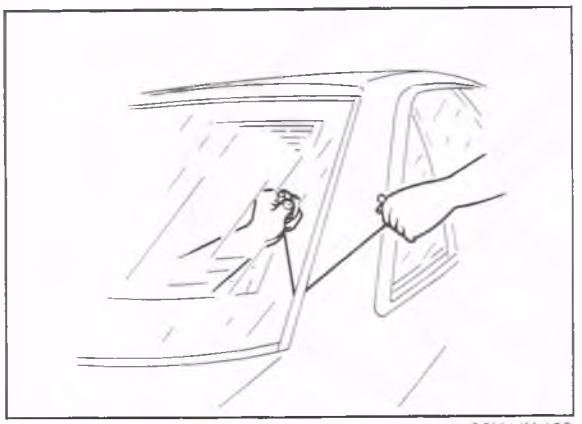

86U14X-139

4. Use an awl to make a hole in the sealant. Pass the end of a piece of the piano wire **(about 40 cm 15.7 in)** through the hole, and attach bars to both ends.
5. Apply protective tape along the edge of the rear hatch body to the glass as shown.
6. Two people should hold the bars, one inside and one outside the vehicle, and then "saw" the sealant from around the glass.
7. Remove the glass from the back door body.

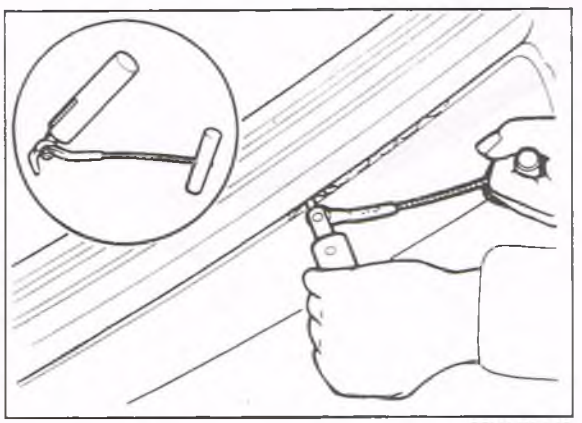

86U14X-140

Caution

a) Cut along the border between the glass and the sealant.

b) If too much heat develops, the piano wire may break, so cool it occasionally or don't work on one place too long.

c) If the glass is not to be reused, a tool like that shown in the figure is faster than piano wire.

Insert the blade in the sealant, pull on the bars, and cut the sealant.

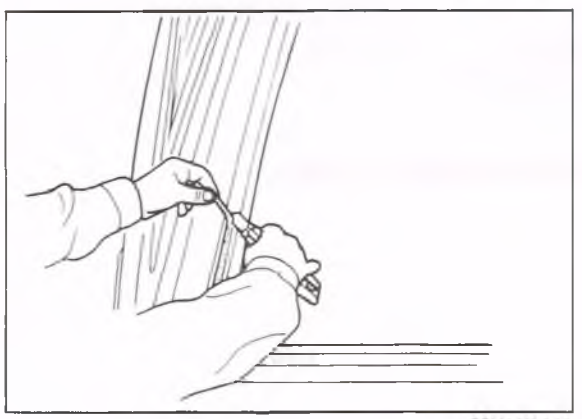

86U14X-141

INSTALLATION

1. Use a knife to smoothly trim the sealant on the body. Leave a layer about **1 or 2 mm (0.04 to 0.08 in)** thick.

Caution

If some sealant flakes off, use new sealant to patch it.

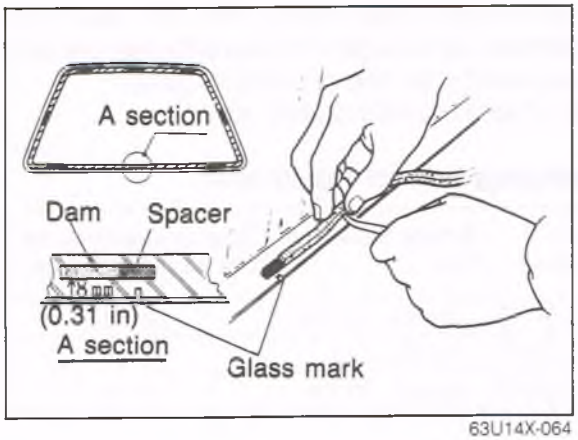

63U14X-064

2. Carefully clean and remove any grease from a **5 cm (1.97 in)** wide area around the circumference of the glass and the remaining bond on the body.
3. Bond a dam along the circumference of the glass **8 mm (0.31 in)** from the edge.

Caution
Securely bond the dam and let it dry.

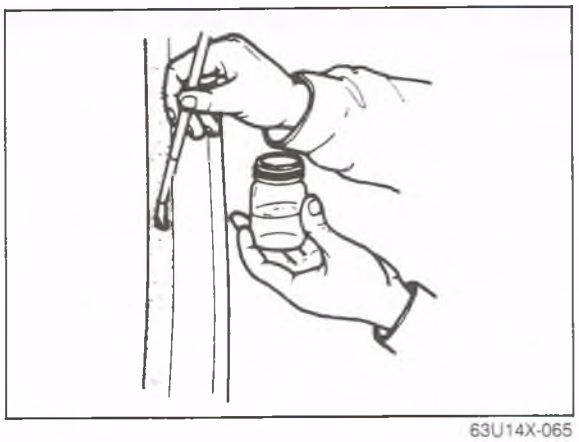
63U14X-065

4. Apply primer with a brush to the circumference of the glass and the body and it them to naturally dry for **20 to 30 minutes**.

Caution
Be sure not to allow dirt, water, oil, etc. to come in contact with the coated surfaces and do not touch it with your hand.

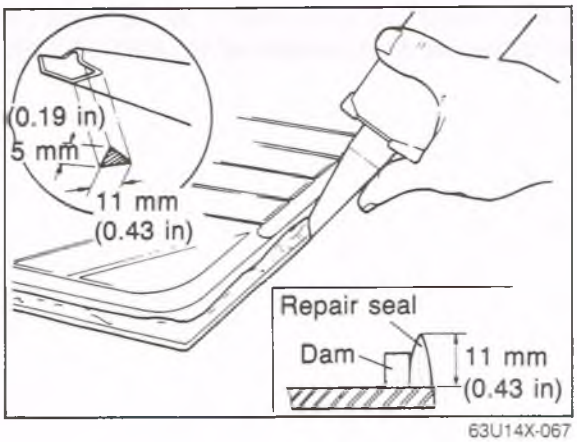

63U14X-067

5. When the primer has dried, apply an **11 mm (0.43 in)** thick bead of **repair seal** (B001 77 739) **11 mm (0.43 in)** from the periphery of the window glass using a sealant gun.

Caution
Cut the nozzle of the repair seal cartridge as illustrated in the figure.
If necessary, smooth the repair seal to correct any irregularities.

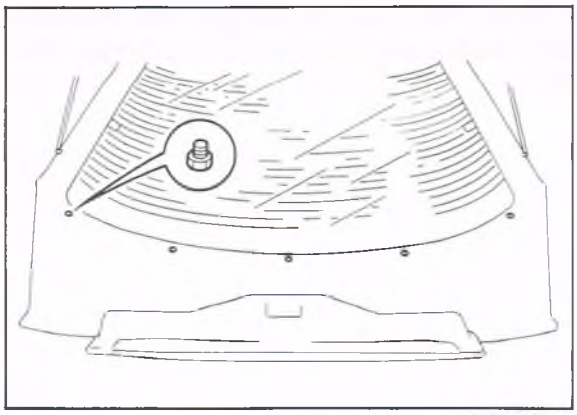
86U14X-142

6. Tighten the rear hatch glass mounting nuts.

Tightening torque:
2.9 N·m (30 cm-kg, 26 in-lb)

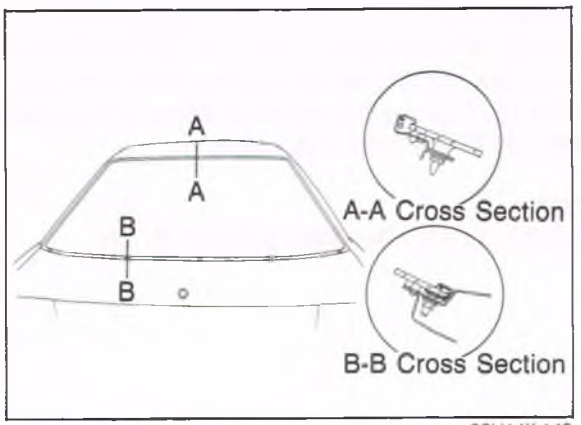

86U14X-143

8. Keep the door glass open until the repair seal hardens to some degree to prevent pressure from being exerted on the rear hatch glass.
If the door is closed quickly etc.

Hardening time of repair seal

Temperature	Surface hardening time	Time required until car can be put in service
5°C (41°F)	Approx. 1.5 hrs	12 hrs
20°C (68°F)	Approx. 1 hr	4 hrs
35°C (95°F)	Approx. 10 min.	2 hrs

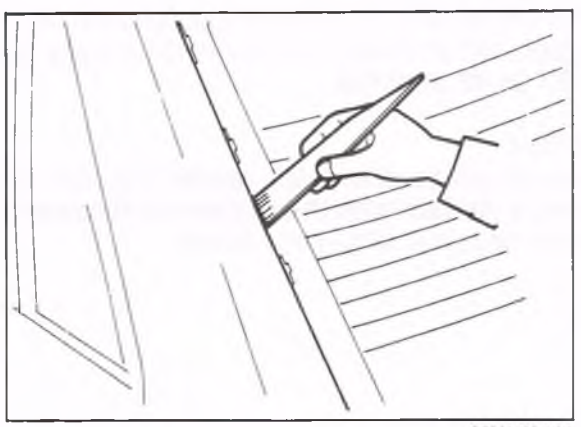

86U14X-144

9. Remove any excess or add repair seal where necessary.

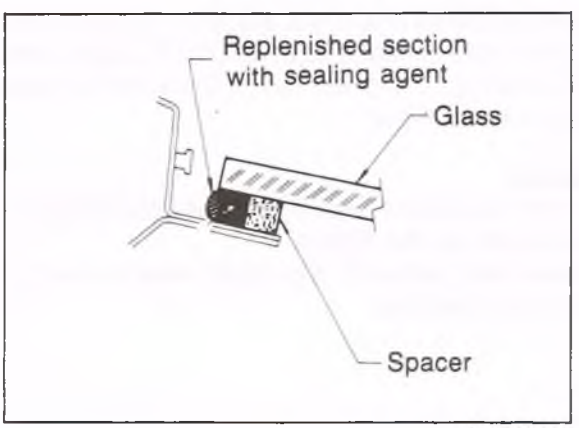

86U14X-146

10. Check for water leaks. If a leak is found, wipe the water off well and add **repair seal** (B001 77 739).

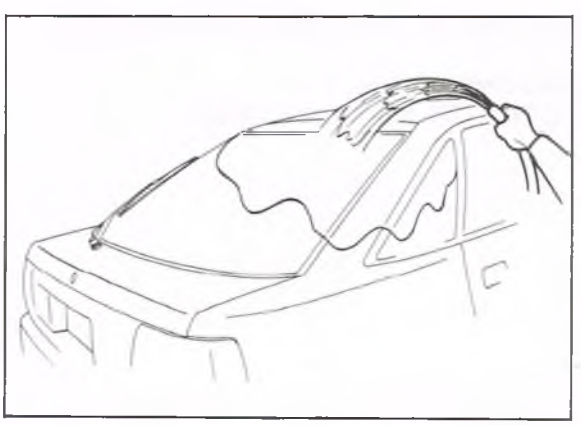

86U14X-147

11. After checking for water leakage, install the mold.
12. Install the wiper arm, door trim, and defogger connector.

QUARTER WINDOW GLASS

STRUCTURAL VIEW

Touring Sedan and Sedan

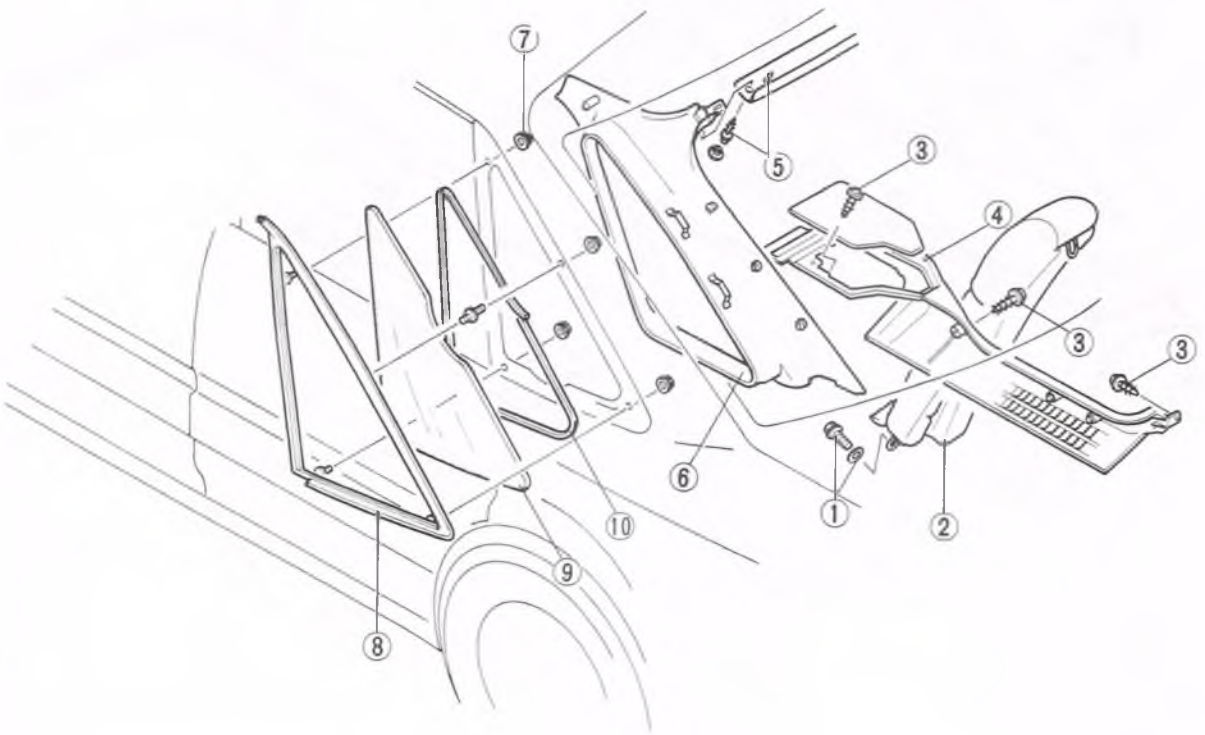

86U14X-148

1. Bolt
2. Rear side seatback
3. Screw (Touring sedan)
4. Package side shelf (Touring sedan)
5. Rear header trim screw
6. Rear pillar trim
7. Nuts
8. Quarter window molding
9. Quarter window glass
10. Dam

Note
Use window tool set (49 0305 870A) to remove and install the glass.

MX-6

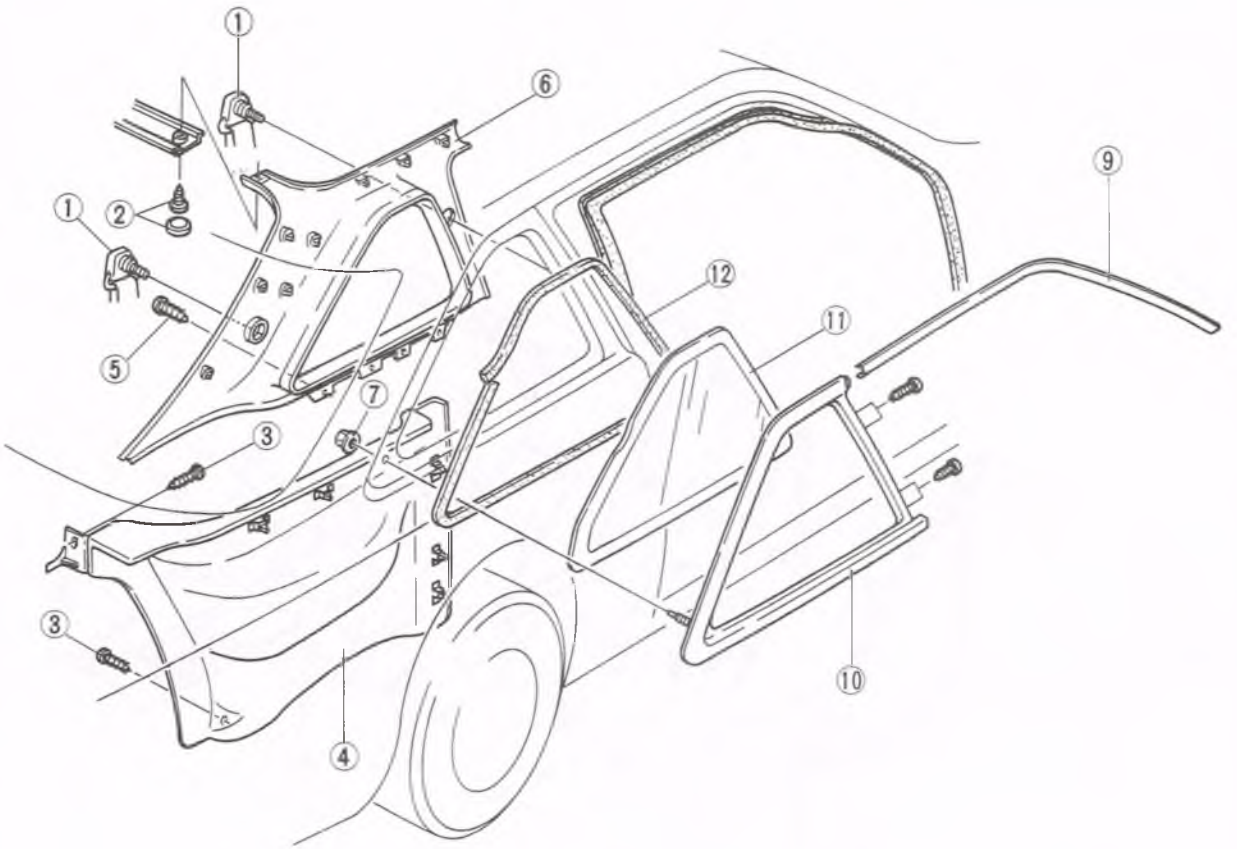

86U14X-149

1. Seat belt bolts
2. Screw
3. Screw
4. Side trim
5. Screw
6. Rear pillar trim
7. Nut
8. Screw
9. Drip molding
10. Quarter window molding
11. Quarter window glass
12. Dam

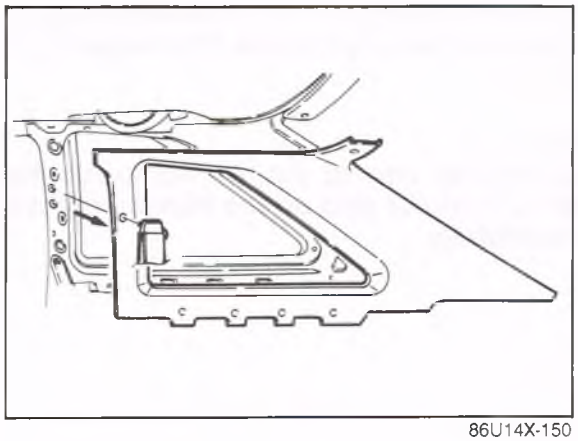

86U14X-150

REMOVAL

1. Fold down the rear seatback, and remove the rear side seatback. (Touring sedan)
2. Remove the luggage compartment cover and the package side shelf. (Touring sedan)
3. Remove the seat bolts.
4. Remove the rear pillar trim.
5. Remove the mounting nut and fastener, and remove the side garnish quarter window molding.

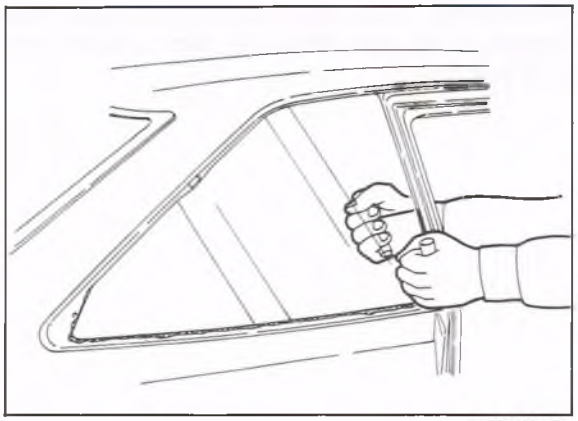

86U14X-151

6. Make a small hole through the sealant.
7. Pass the piano wire through the hole.
8. Wind each end of the wire around a bar.
9. Pull the wire to and fro, and saw through the sealant around the edge of the glass. Then remove the glass.

Caution

a) Use a long sawing action to spread the work over the whole length of wire to prevent it from breaking.

b) Be careful that the wire does not rub on the vehicle paint.

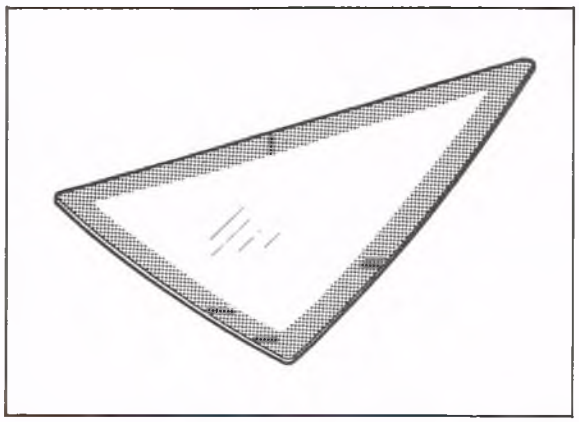

86U14X-152

INSTALLATION

1. Use the knife to smoothly cut the sealant on the body side, leaving a layer about **1 or 2 mm (0.04 to 0.08 in)** thick.
2. Carefully clean around the edge of the quarter window glass **(up to approx. 5 cm (0.2 in)** from the edge), and the adhesion surface at the body side.

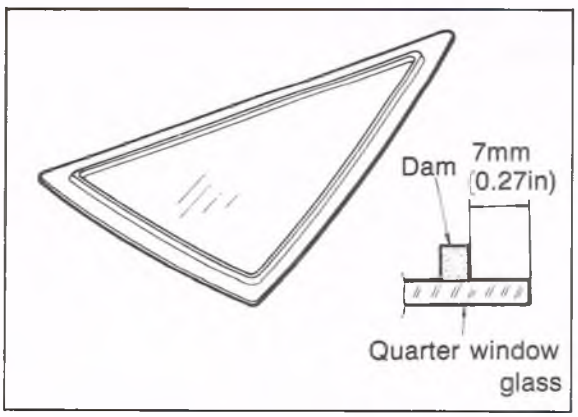

86U14X-153

3. Attach a **dam** (G043 50 762) around the glass, **approx. 7 mm (0.28 in)** from the edge.

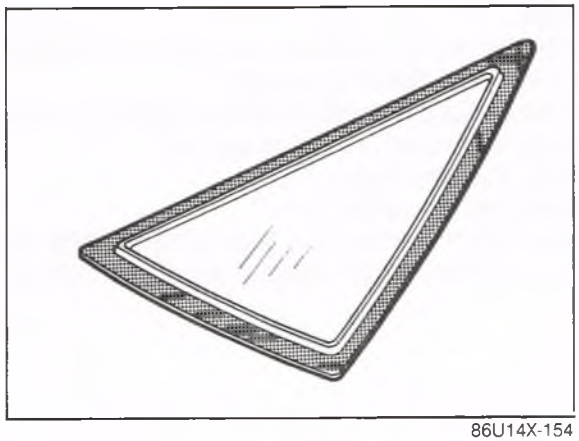

86U14X-154

4. Apply a thin coat of primer to the bonding area of the body and glass, and **allow 30 minutes** for it to dry.

Caution
Keep the area free of dirt. Do not touch the surface. If primer gets on the hands, remove it immediately.

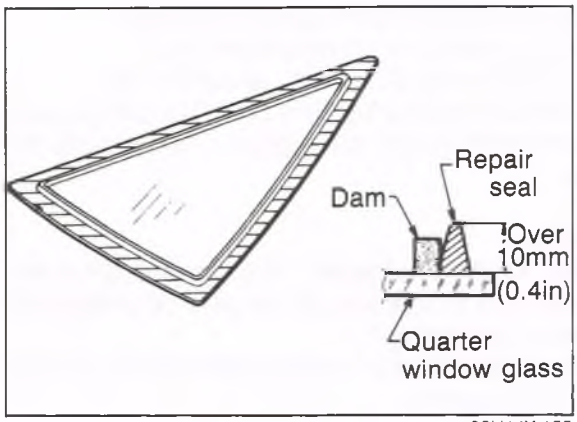

86U14X-155

5. After the primer dries, apply a bead of repair seal to a height of **10 mm (0.4 in) min**. around the edge of the glass.

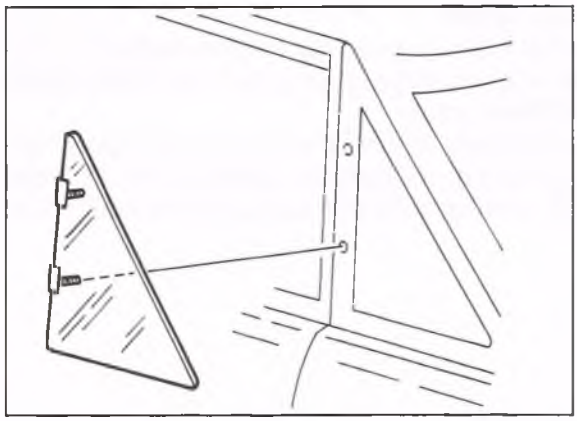

86U14X-156

6. Attach the glass to the body.

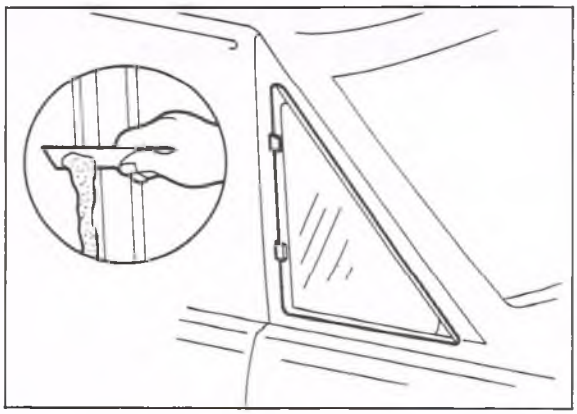

86U14X-157

7. Remove excess sealant. Add sealant where necessary.

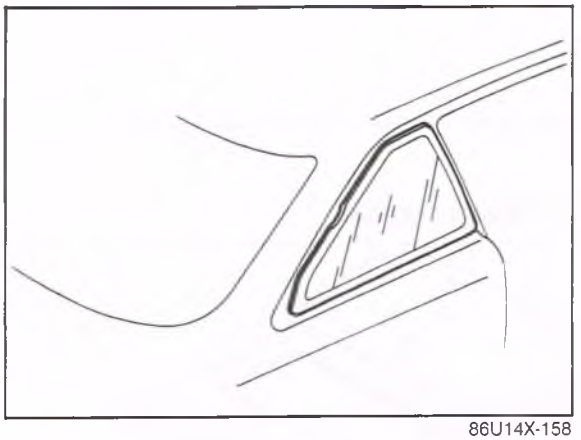

86U14X-158

8. Check for water leaks. If a leak is found, wipe the water off well and add **repair seal** (B001 77 739).
9. Install in the reverse order of removal.

HEADLINER

STRUCTURAL VIEW

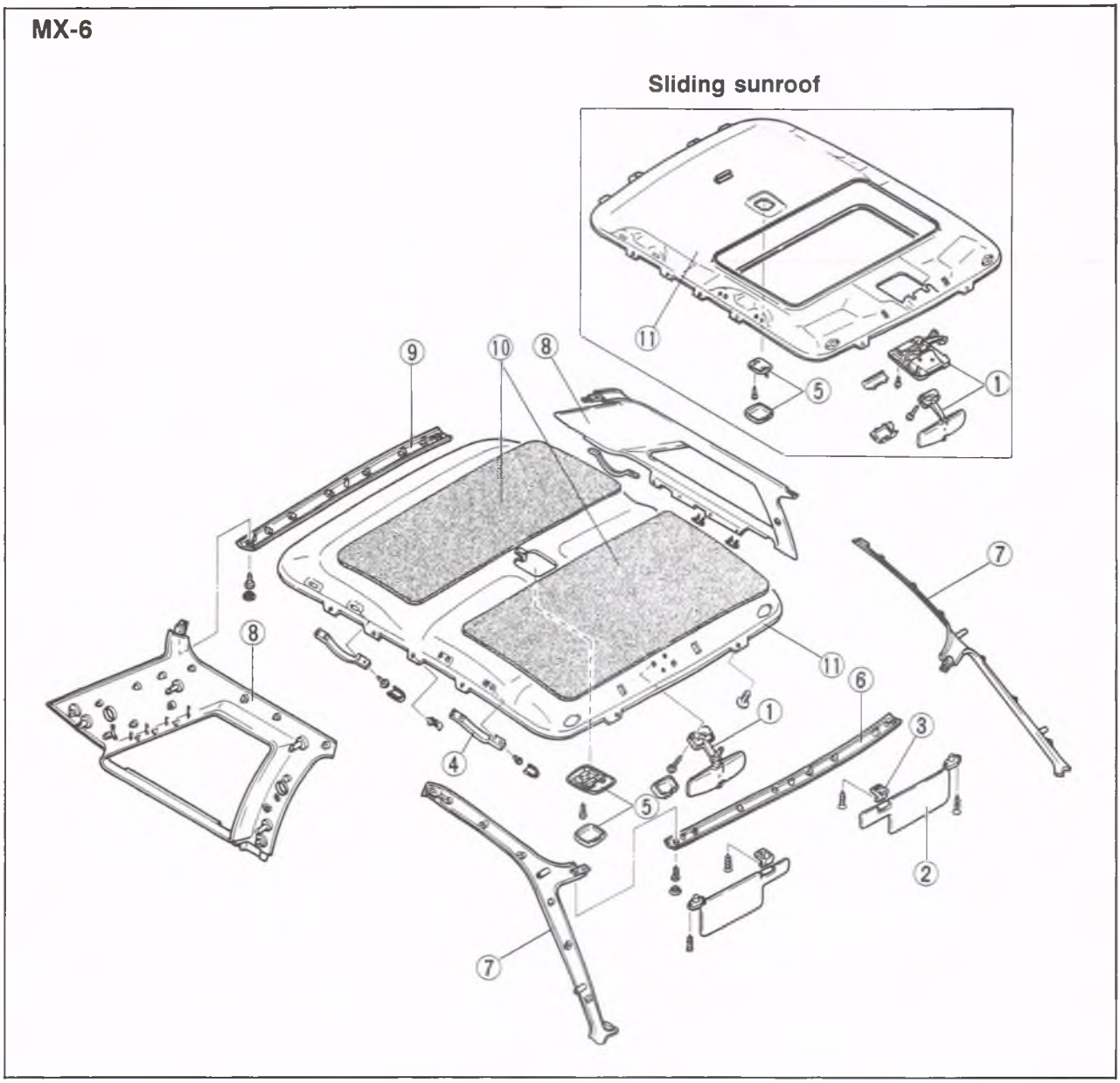

86U14X-159

1. Rearview mirror and overhead console
2. Sunvisor
3. Center adaptor
4. Assist handle
5. Interior light
6. Front header trim
7. Front pillar trim
8. Rear pillar trim
9. Rear header trim
10. Insulator
11. Headliner

Sedan and Touring Sedan

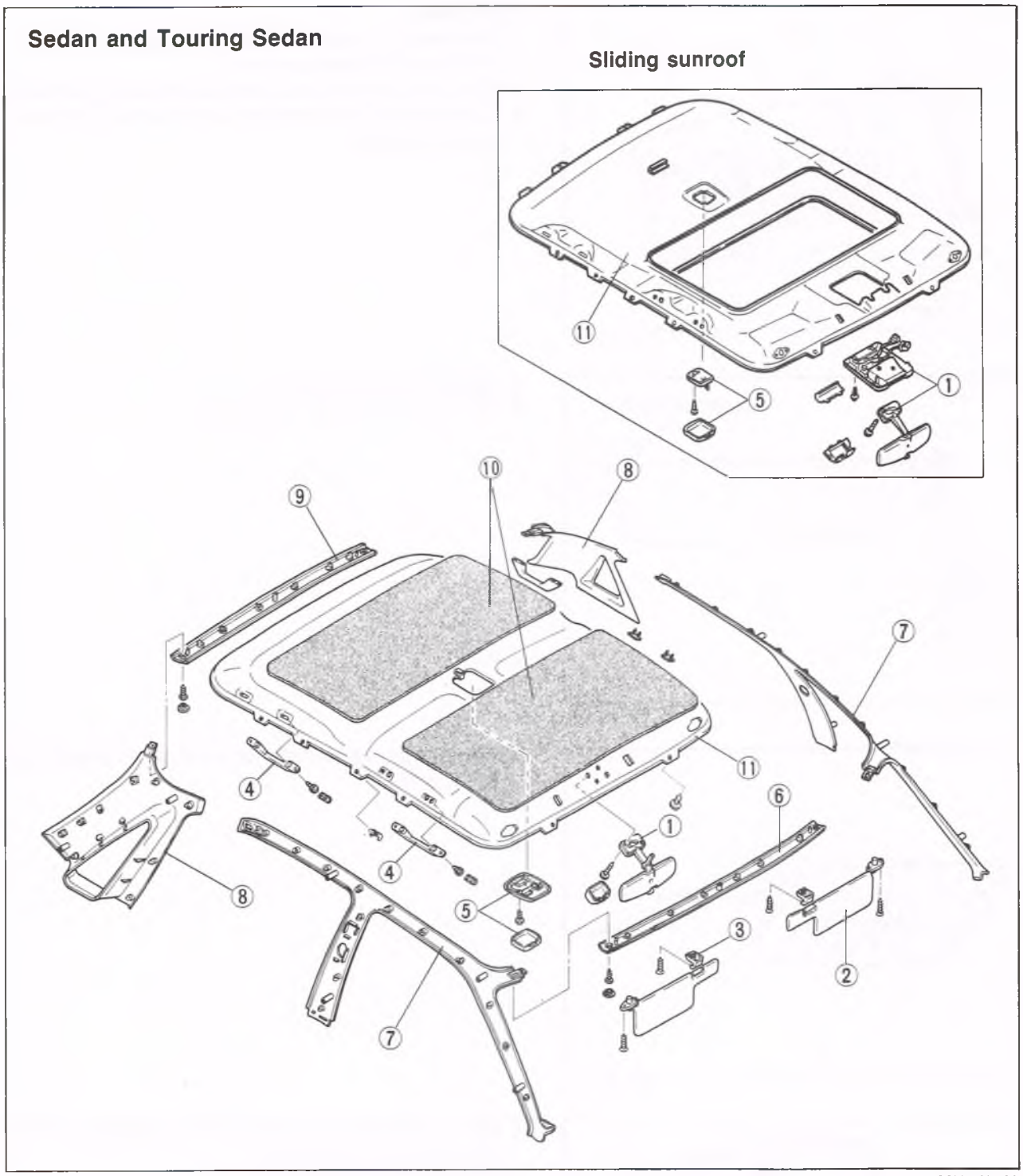

86U14X-160

1. Rearview mirror and overhead console
2. Sunvisor
3. Center adaptor
4. Assist handle
5. Interior light
6. Front header trim
7. Front pillar trim
8. Rear pillar trim
9. Rear header trim
10. Insulator
11. Headliner

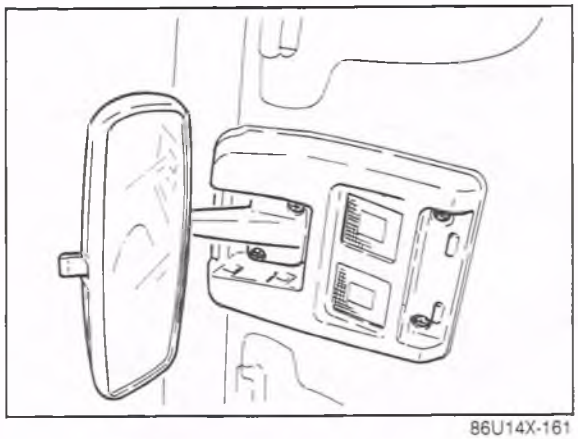

86U14X-161

REMOVAL

1. Remove the overhead console cover.
2. Remove the rearview mirror.
3. Remove the overhead console mounting screws.
4. Disconnect the connectors and remove the overhead console.

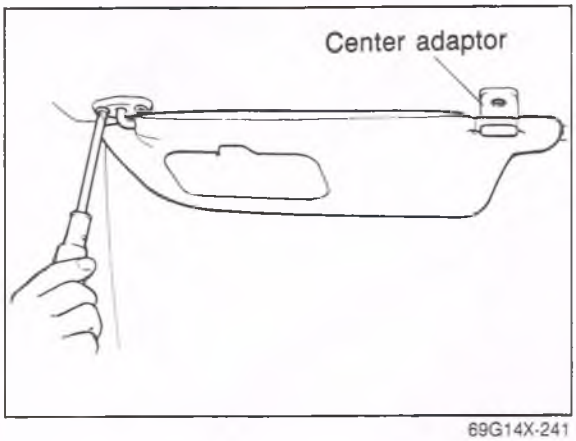

69G14X-241

5. Remove the sunvisors.
6. Remove the center adaptors.

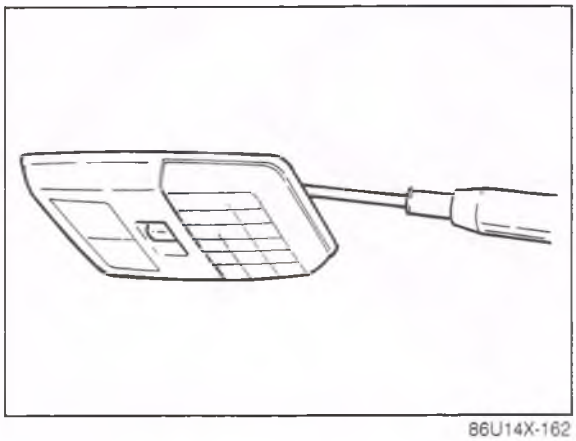

86U14X-162

7. Remove the interior light lens with a protected small screwdriver.

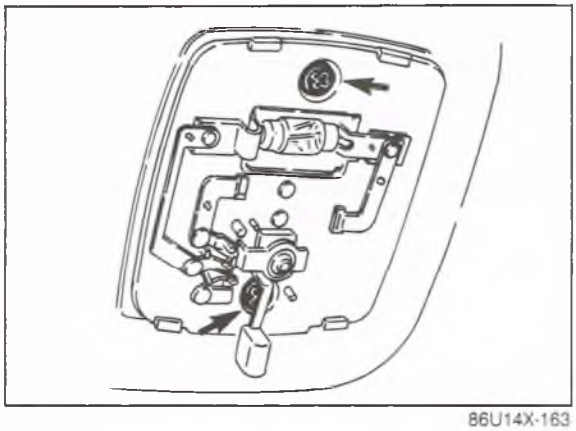

86U14X-163

8. Remove the interior light mounting screws and disconnect the connector.
9. Remove the interior light.

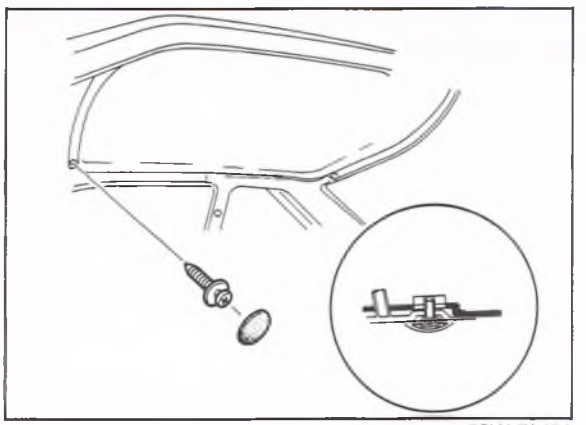

86U14X-164

10. Remove the caps and screws at the ends of the front header trim.

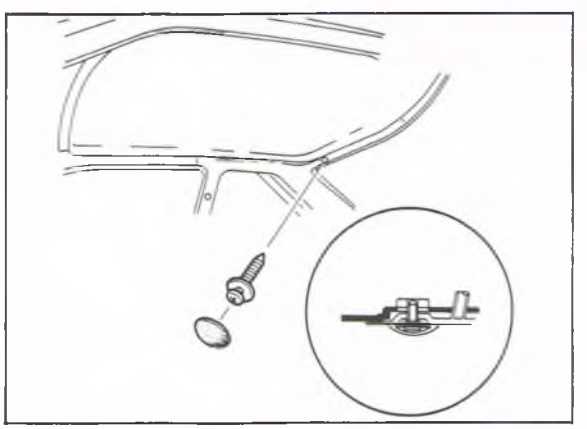

86U14X-165

11. Remove the caps and screws at the ends of the rear header trim.

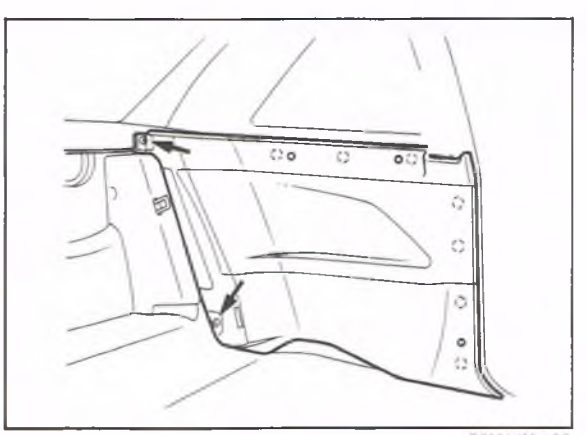

86U14X-166

12. Remove the rear side trim.

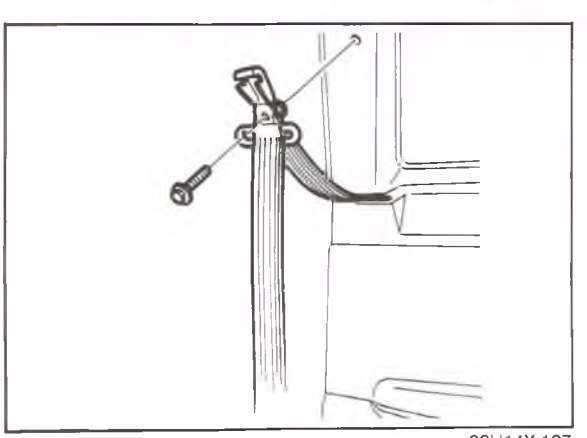

86U14X-167

13. Remove the seat belt mounting bolts.

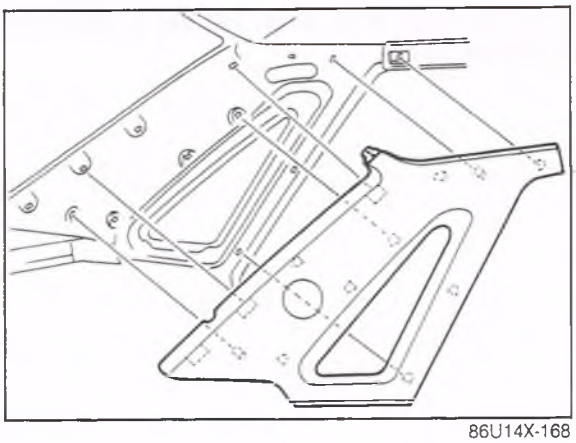

86U14X-168

14. Remove the rear pillar trim with a protected standard screwdriver.

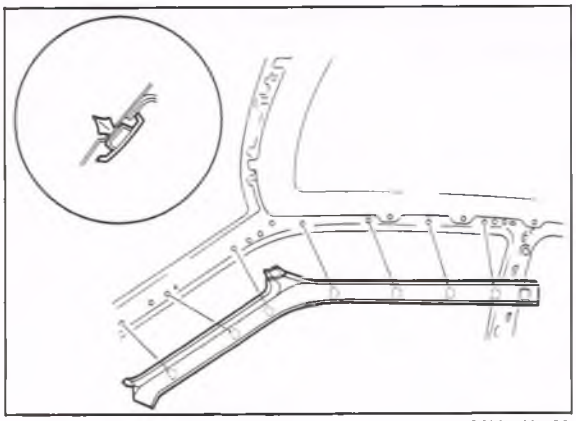

86U14X-169

15. Remove the front pillar trim using a protected standard screwdriver.

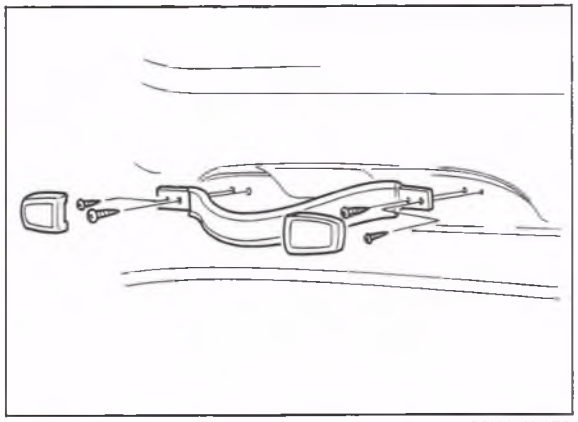

86U14X-170

16. Remove the assist handles.

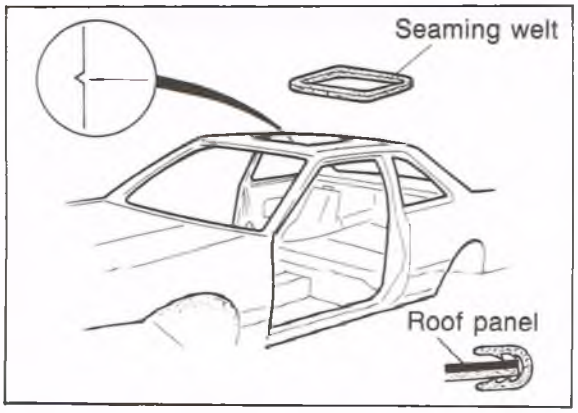

86U14X-171

17. Remove the sliding sunroof seaming welt.

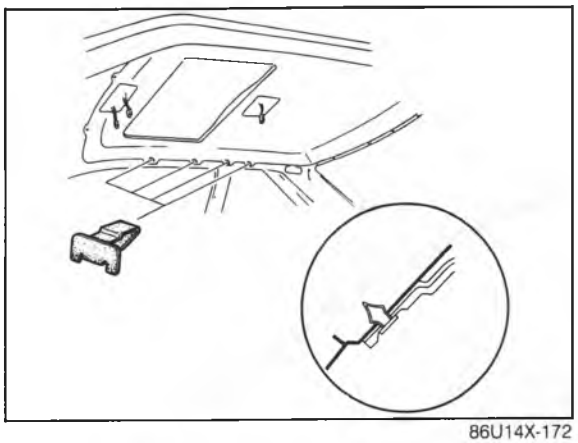

86U14X-172

18. Remove the fasteners and remove the headliner.

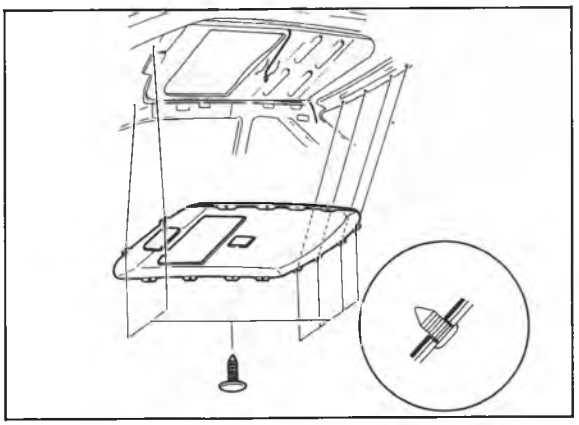

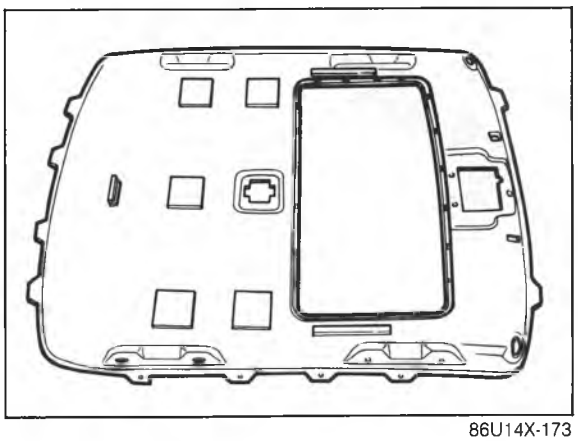

86U14X-173

INSTALLATION

Install in the reverse order of removal, noting the following.

Note

Align the trim and clip positions, then install the clips by striking them lightly.

INSTRUMENT PANEL

STRUCTURAL VIEW

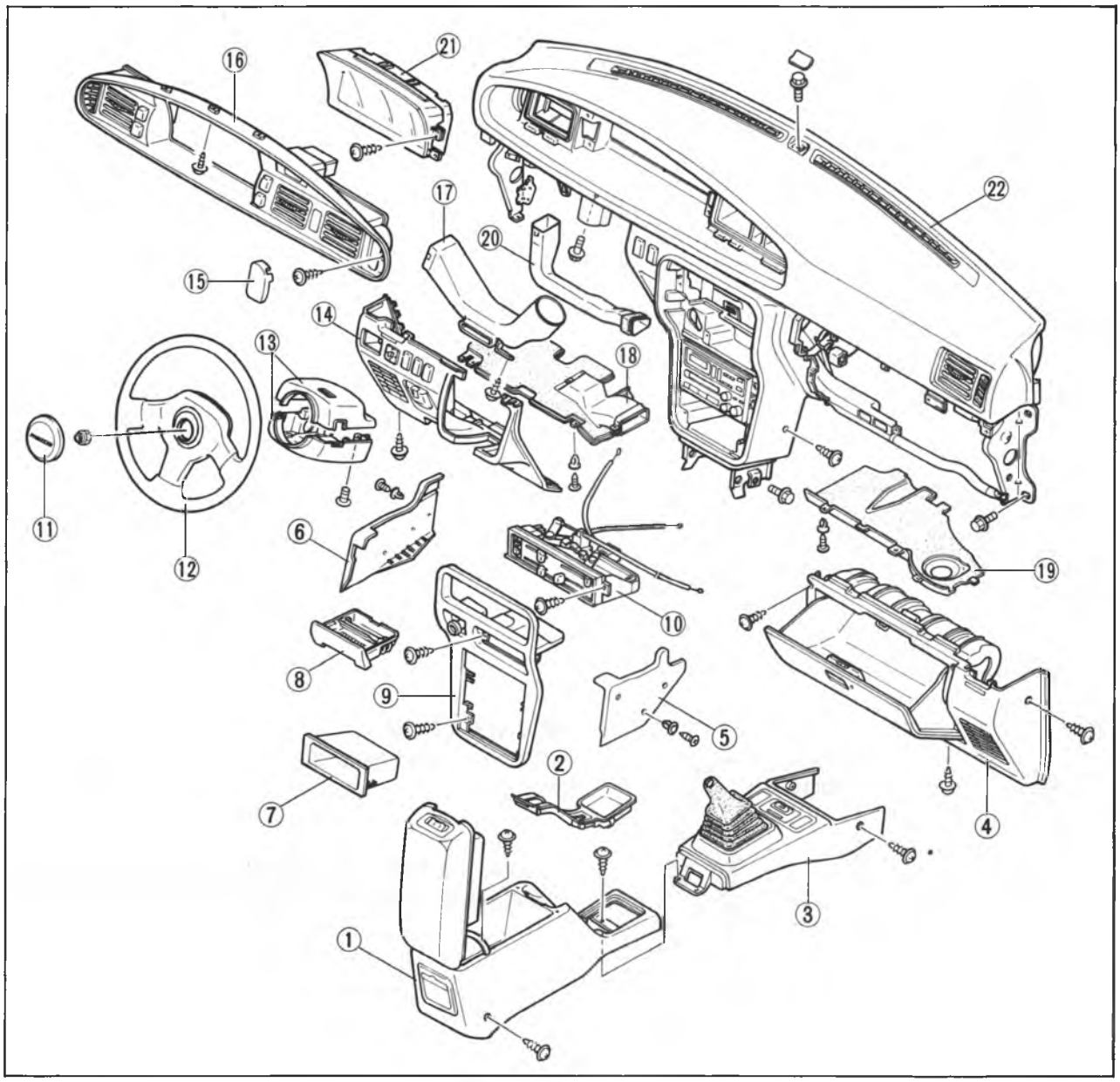

86U14X-174

1. Rear console
2. Upper plate.
3. Front console
4. Glove compartment
5. Side cover
6. Side cover
7. Box
8. Ashtray
9. Center panel
10. Heater control assembly
11. Steering wheel ornament
12. Steering wheel
13. Column cover
14. Switch panel
15. Cap
16. Meter hood
17. Duct
18. Duct and under cover
19. Under cover
20. Duct
21. Meter assembly
22. Instrument panel

INSTALLATION VIEW

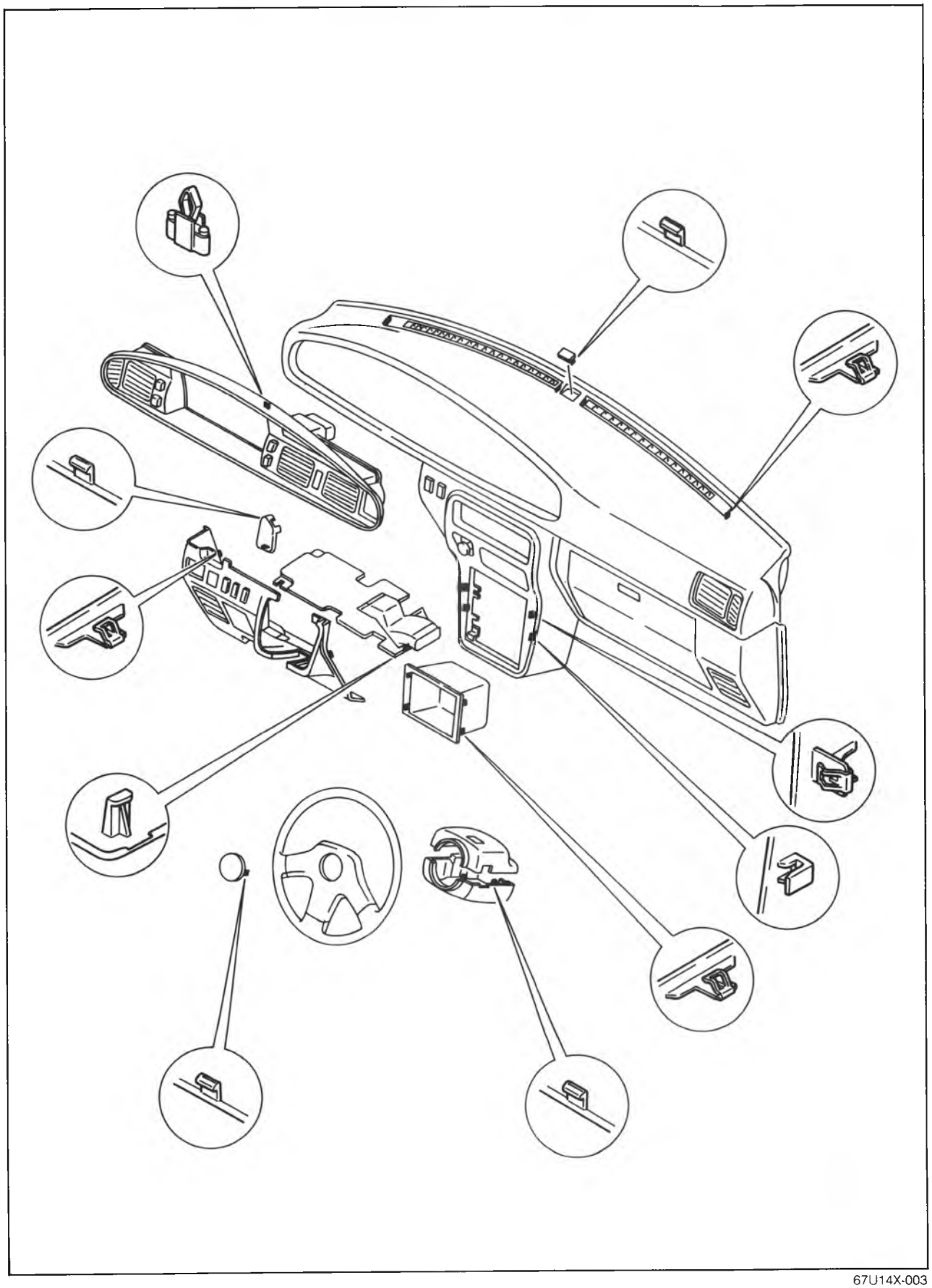

67U14X-003

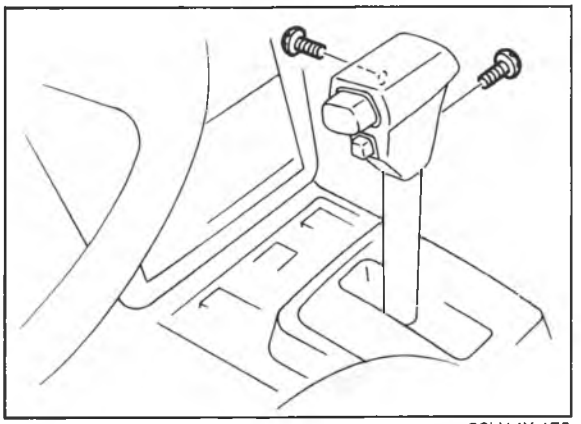
86U14X-175

REMOVAL

1. Remove the screws and remove the shift lever knob (ATX).

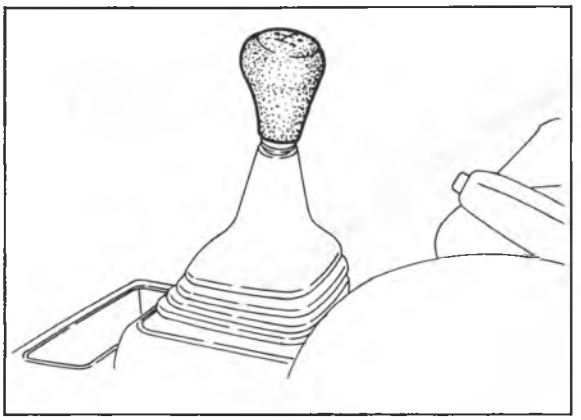
86U14X-176

2. Remove the shift lever knob (MTX).

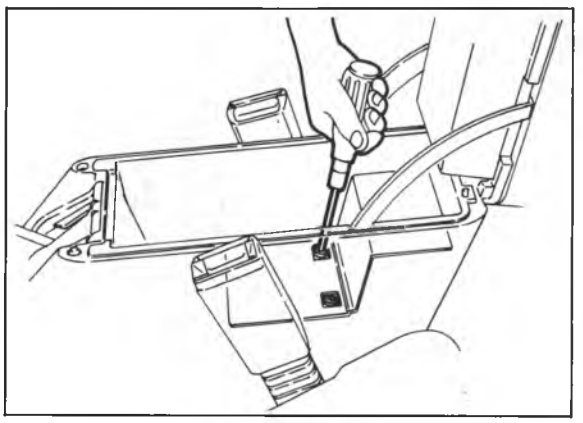
86U14X-178

3. Remove the rear console mounting screws.
4. Pull the console rearward and remove it.

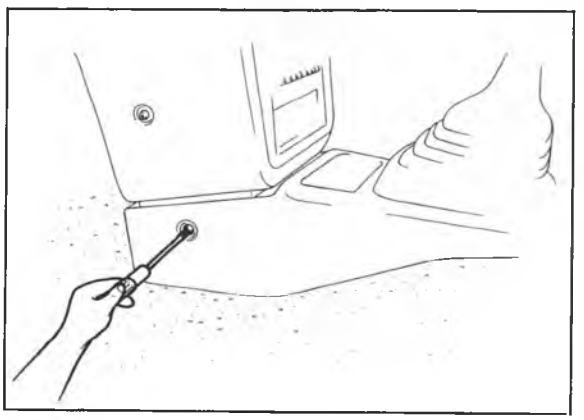
86U14X-179

5. Remove the front console mounting screws.

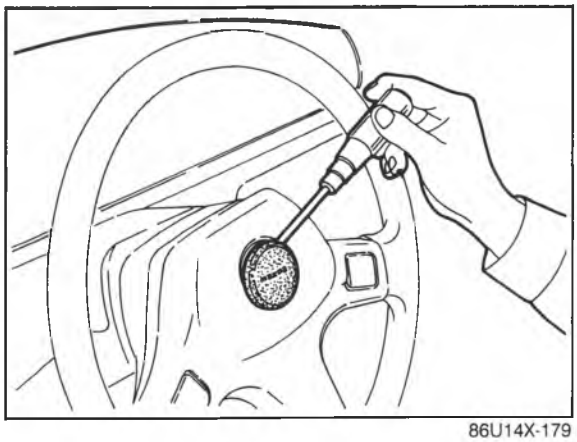

86U14X-179

6. Remove the steering wheel ornament.

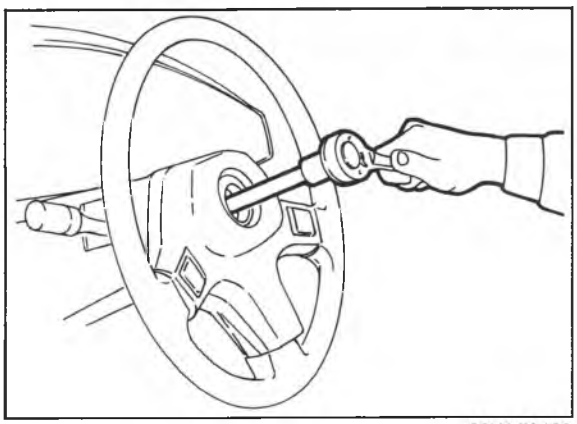

86U14X-180

7. Remove the steering wheel mounting nut.

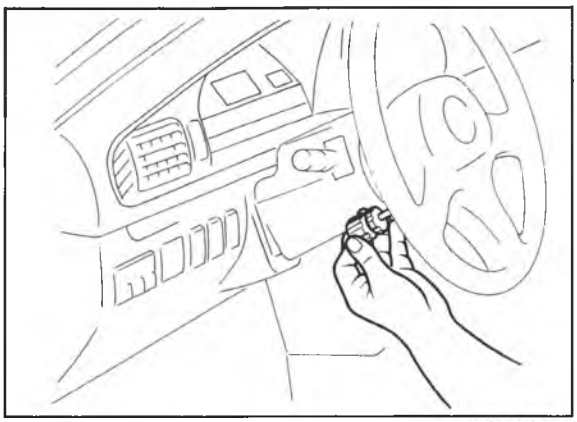

86U14X-181

8. Remove the screws and the streering wheel cap.

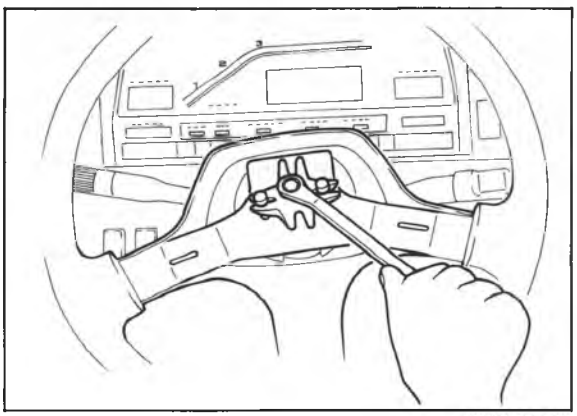

86U14X-182

9. Remove the steering wheel with a steering wheel puller.

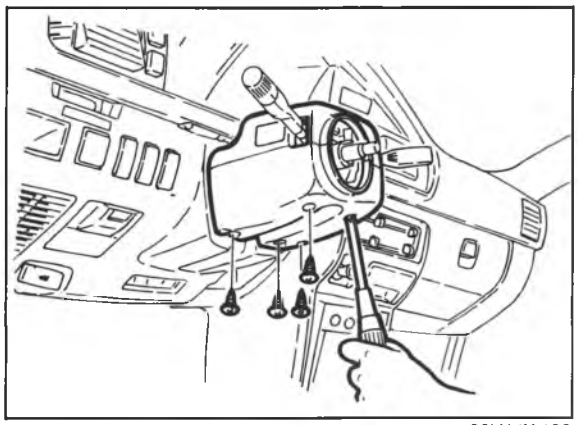

86U14X-183

10. Remove the screws and remove the column covers (upper and lower).

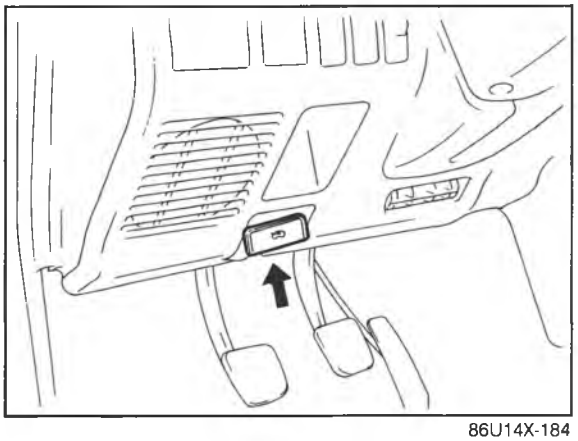

86U14X-184

11. Remove the screws and remove the under cover. Loosen the nut and remove the hood release knob.

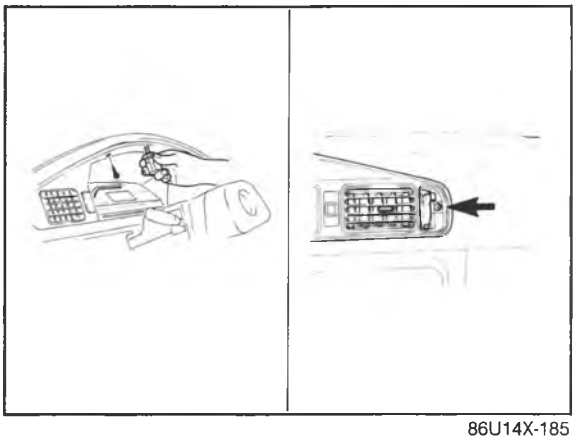

86U14X-185

12. Remove the screws and pull out the meter hood.
13. Disconnect the connectors and remove the meter hood.

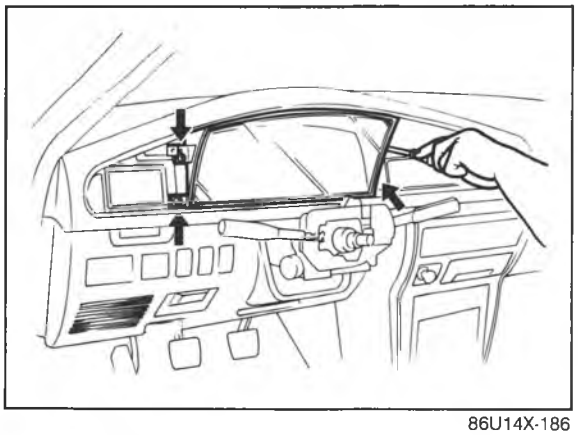

86U14X-186

14. Remove the screws and pull the meter assembly outward.
15. Disconnect the speedometer cable at the speedometer.
16. Disconnect the gauge connectors.
17. Remove the meter assembly.

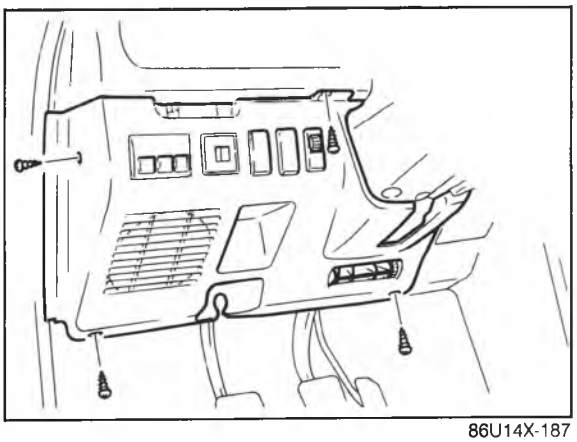

86U14X-187

18. Remove the screws and pull the panel outward.
19. Disconnect the connectors and remove the switch panel.

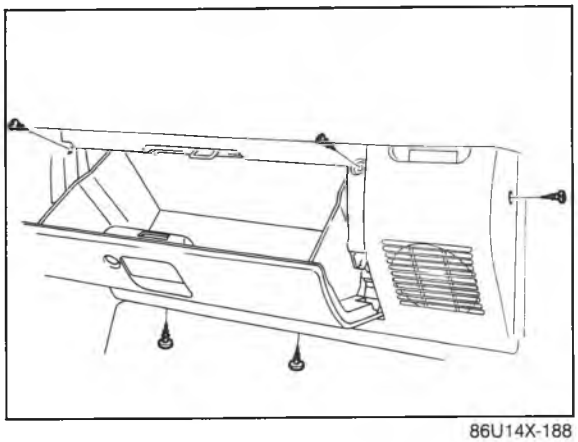

86U14X-188

20. Remove the screws and remove the glove box.
21. Disconnect the glove box light connector.

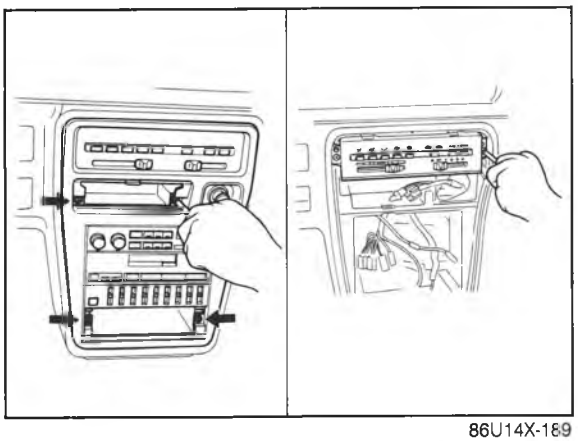

86U14X-189

22. Remove the center panel.
23. Remove the screws and slide out the heater control assembly.
24. Disconnect the control wires at the DEF, MAX—COLD and REC positions (lever type control).

Note
Disconnect the connectors at the rear of the control (Logicon type).

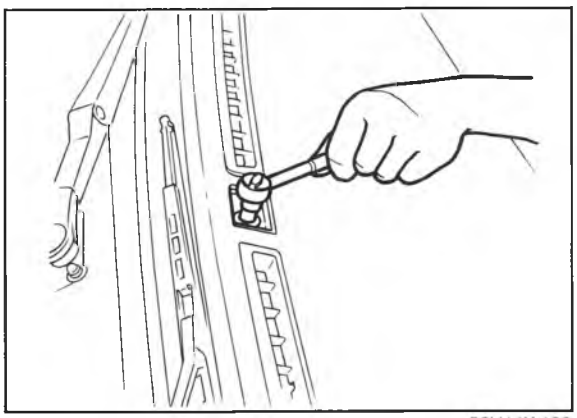

86U14X-190

25. Remove the center cap.
26. Remove the instrument panel mounting bolt.

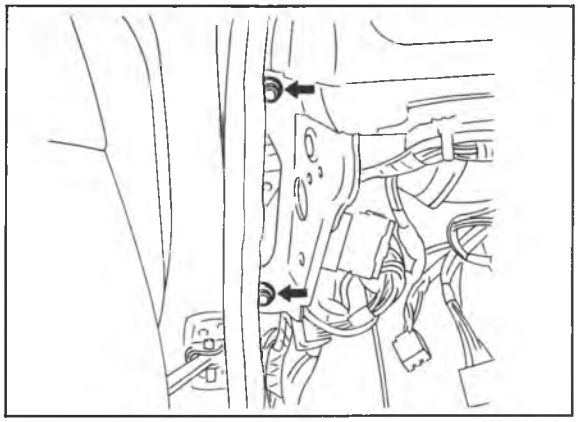

86U14X-191

27. Remove the instrument panel side mounting bolts.

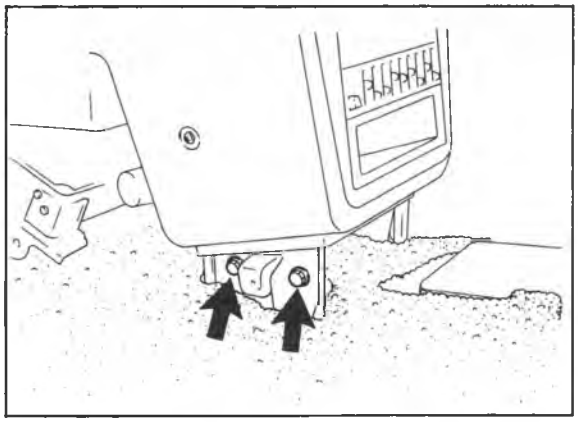

86U14X-192

28. Remove the instrument panel center bracket mounting bolts.

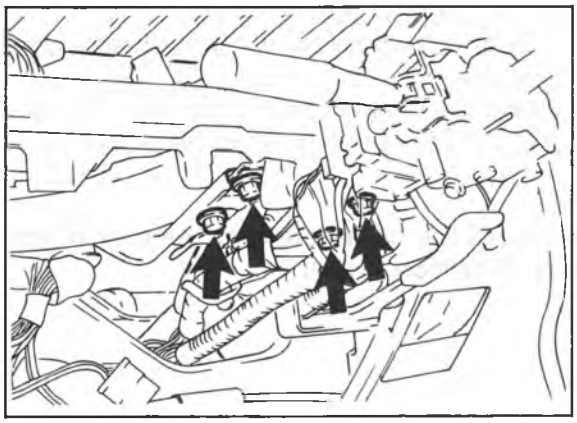

86U14X-193

29. Remove the steering shaft mounting bolts.

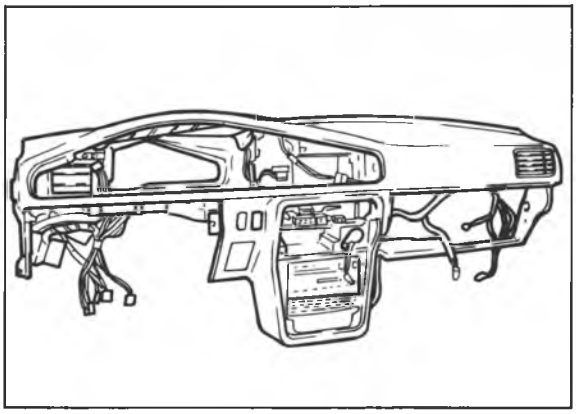

86U14X-194

30. Disconnect the dash harness connectors.
31. Remove the instrument panel.

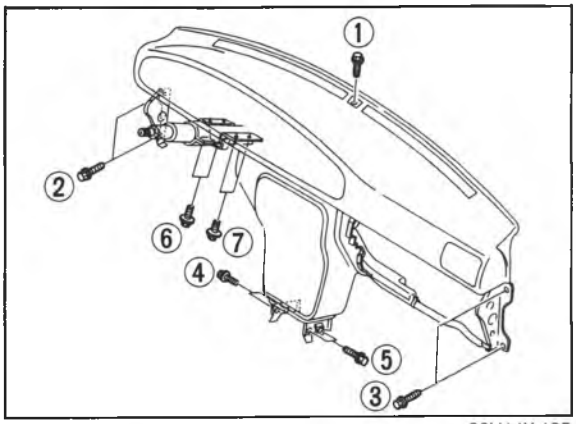

86U14X-195

INSTALLATION

Install in the reverse order of removal, noting the following.

1. Tightening torque:

Bolt \ Torque	N·m (m-kg, ft-lb)
①	4.22—6.18 (0.43—0.63, 3.10—4.54)
② ③	8.8—14 (0.9—1.4, 6.5—10)
④ ⑤	8.8—14 (0.9—1.4, 6.5—10)
⑥ ⑦	8.8—14 (0.9—1.4, 6.5—10)
Steering wheel	39—49 (4.0—5.0, 29—36)

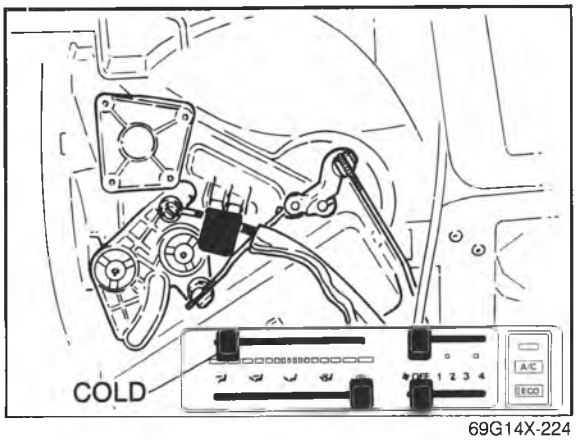

69G14X-224

2. Air-mix door control wire

a. Set TEMP lever at MAX—COLD position.
b. Connect the control wire and clamp it with the shutter lever on the heater unit all the way to the right side.

Caution
Move the temperature control lever to check that the wire is secured. Also, check that it moves the full stroke between HOT and COLD.

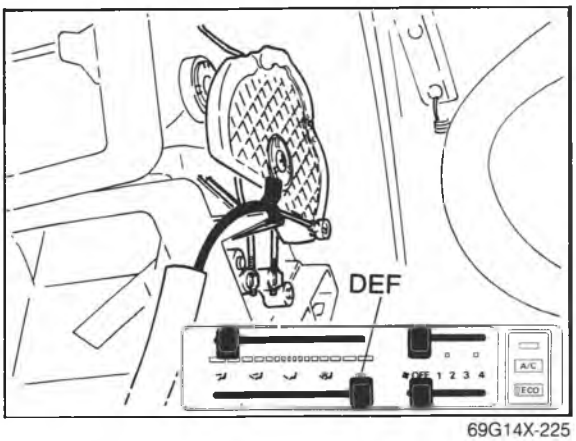

69G14X-225

3. Mode control wire

a. Set MODE control lever to DEF position.
b. Connect the control wire and clamp it with the shutter lever on the heater unit at its closest point.

Caution
Move the mode lever to check that the wire is secured. Also, check that it moves the full stroke between DEF and VENT.

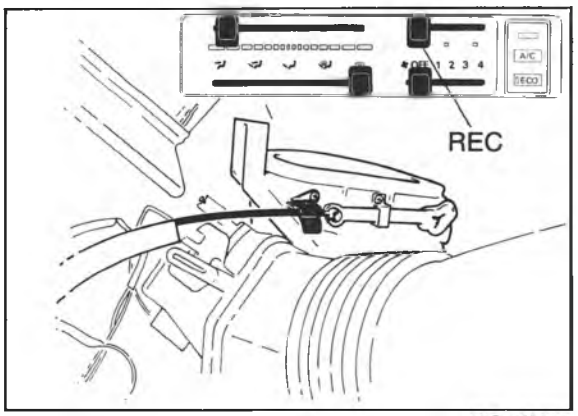

69G14X-226

4. REC-FRESH air selector wire

a. Set the selector lever to REC position.
b. Connect the control wire and clamp it with the shutter lever on the blower unit at its closest point.

Caution
Move the recirculate-fresh air switch lever to check that the wire is secured. Also, check that it moves the full stroke between REC and FRESH.

SLIDING SUNROOF

STRUCTURAL VIEW

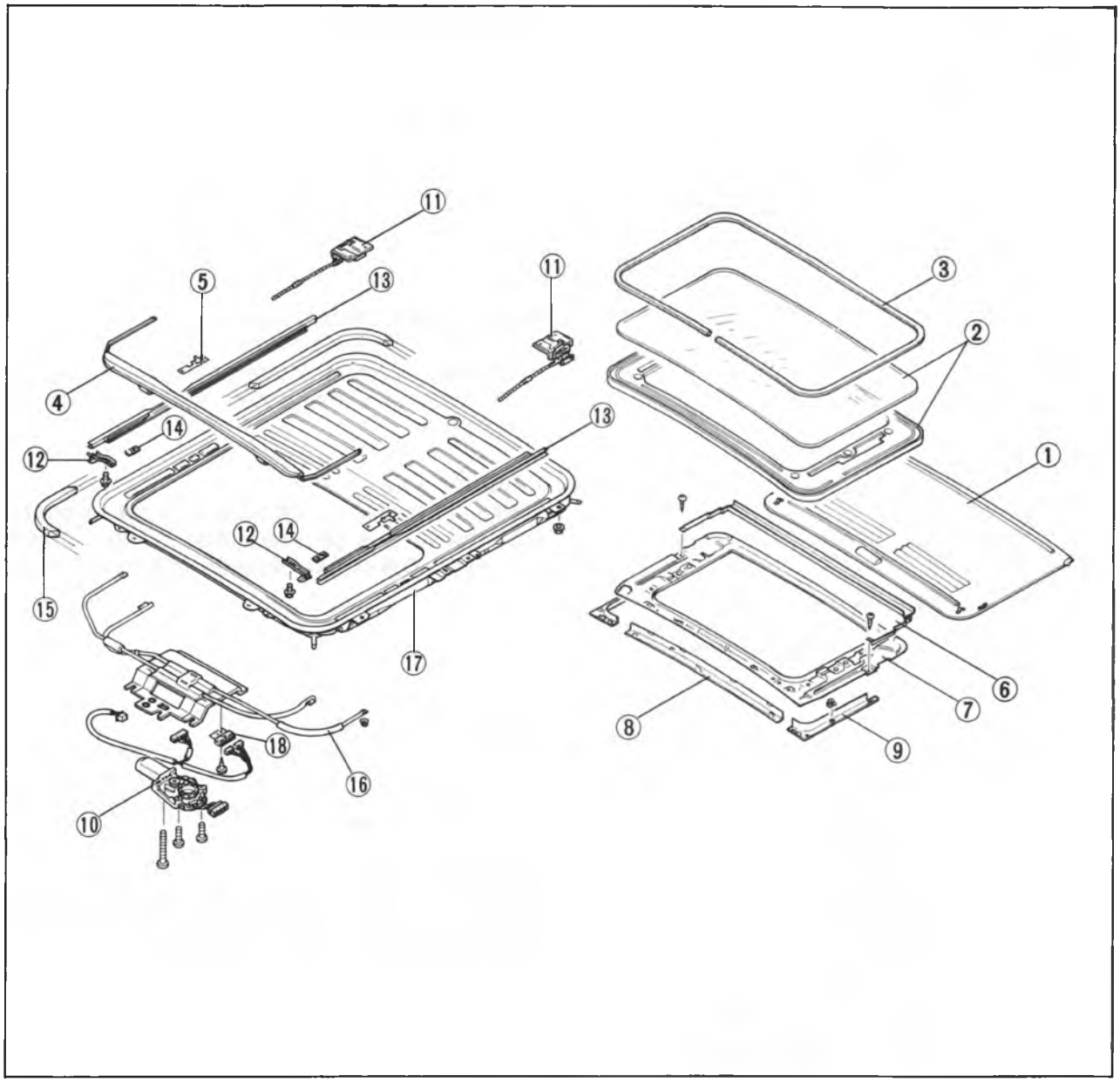

86U14X-196

1. Sun shade
2. Slide panel
3. Weatherstrip
4. Deflector
5. Set plate
6. Drip rail
7. Lower panel
8. Lower panel cover
9. Decoration cover
10. Motor assembly
11. Guide brackets (rear)
12. Guide bracket (front)
13. Guide rails
14. Guide
15. Packing
16. Tube assembly
17. Frame assembly
18. Sunroof relay

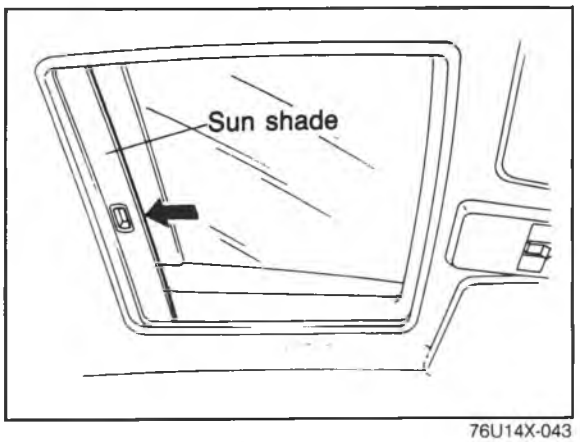

76U14X-043

REMOVAL

1. Slide the sun shade all the way to the rear.
2. Fully close the sliding panel.

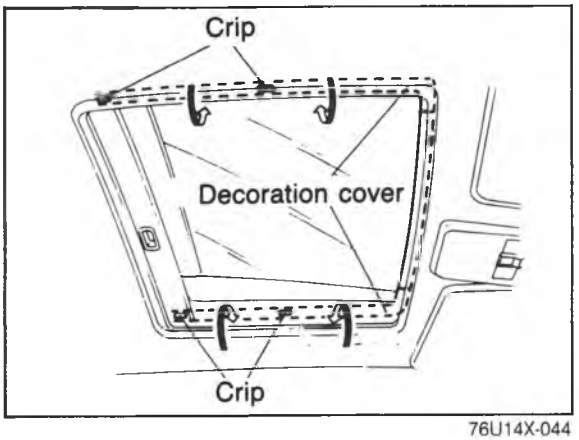

76U14X-044

3. Remove the left and right decoration covers.

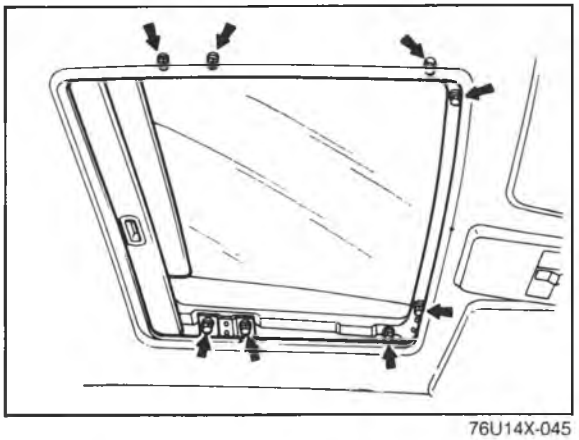
76U14X-045

4. Remove the installation nuts for the sliding panel and lower panel.
5. Remove the sliding panel by pushing it upward from inside the vehicle.

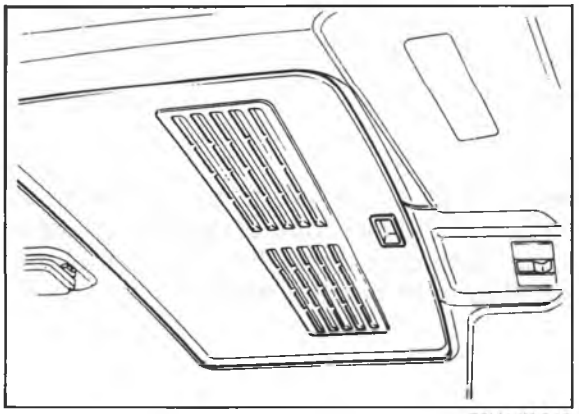
76U14X-046

6. Fully close the sun shade.

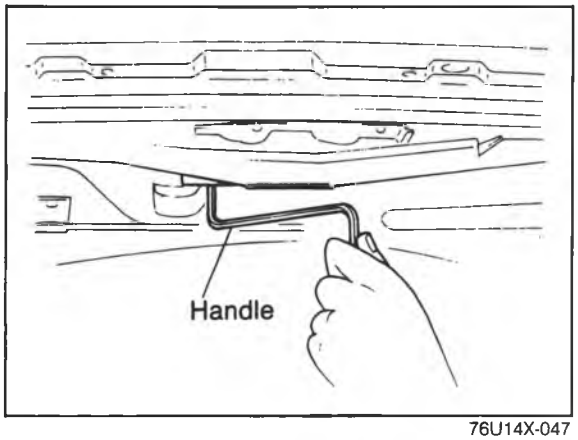

76U14X-047

7. Turn the handle and move the sun shade **5—10 mm (0.19—0.39 in)** to the rear.

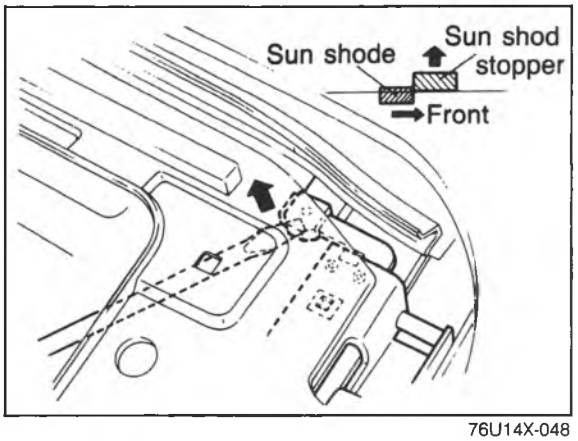

76U14X-048

8. Use a flat-tip screwdriver to lift the sun shade stopper at the rear of the cable holder, then release the stopper and move the sun shade toward the front.
9. Turn the handle to fully open the lower panel. (Leave the sun shade fully closed.)

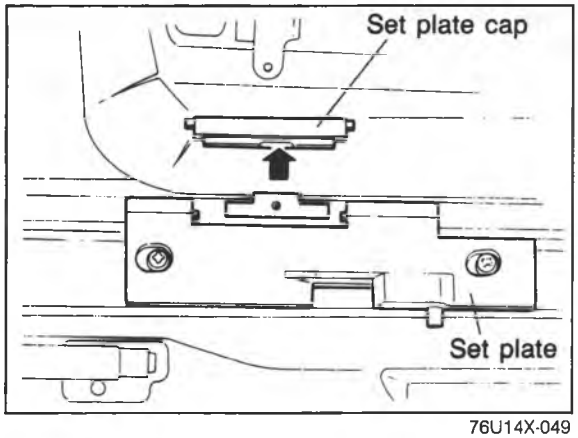

76U14X-049

10. Open the sun shade half way and remove the set plate cap. Pull out the sun shade from the notch of the set plate.

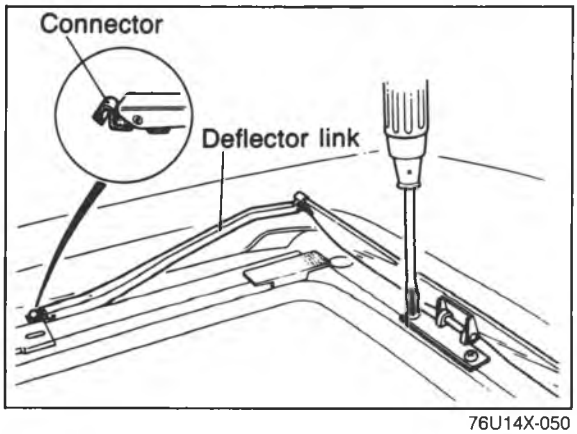

76U14X-050

11. Use a flat-tip screwdriver to pry up the connector at the rear of the deflector link, being careful not to scratch it, and remove the deflector link.
12. Remove the screws and remove the deflector.

Note
Because force is applied to the deflector by the spring in the direction of opening, hold so that the deflector doesn't contact the roof panel, then pull out the deflector link.

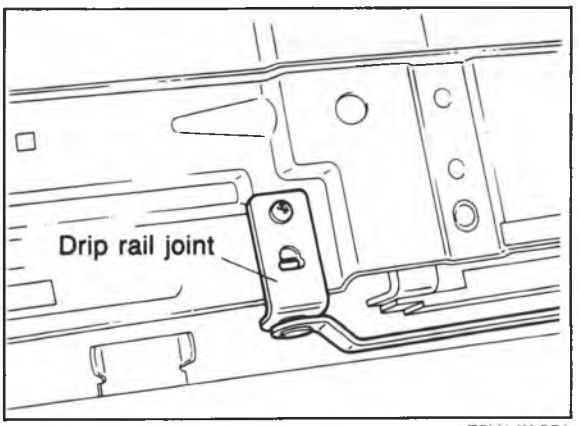

76U14X-051

13. Completely close the lower panel.

Note
Because the lower panel will move forward out of place, turn the motor using the handle while pushing to the rear to close fully.

14. After removing the screw and the drip rail joint link, push the drip rail backward and inward.

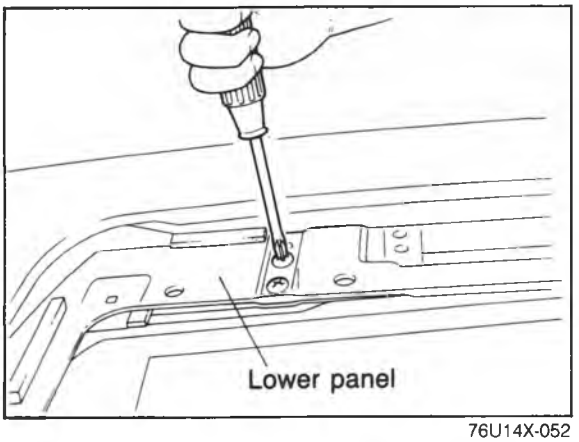

76U14X-052

15. After removing the installation screw of the guide bracket assembly (rear), remove the right side of the guide (front).
16. Remove the lower panel.

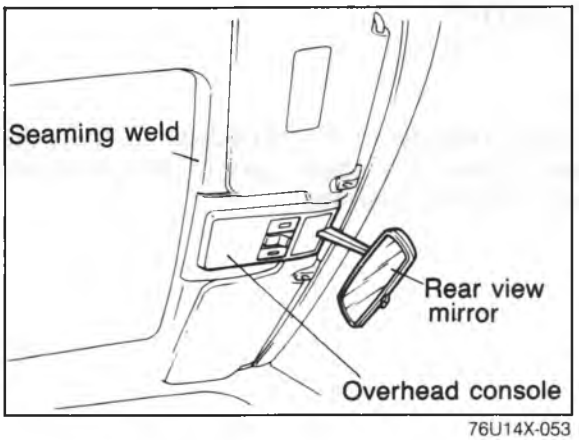

76U14X-053

17. Remove the rear view mirror, overhead console, and seaming welt.

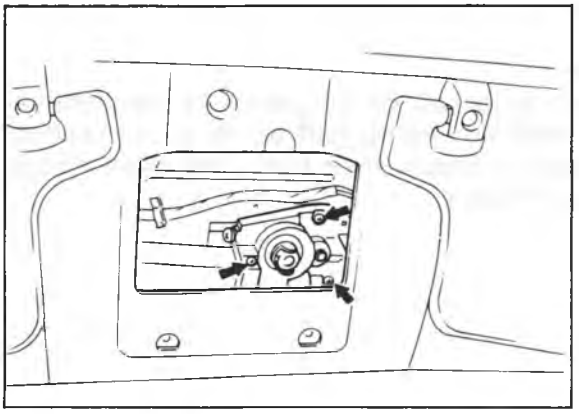

76U14X-054

18. After removing the 3 screws, remove the motor and pull out the harness coupler.

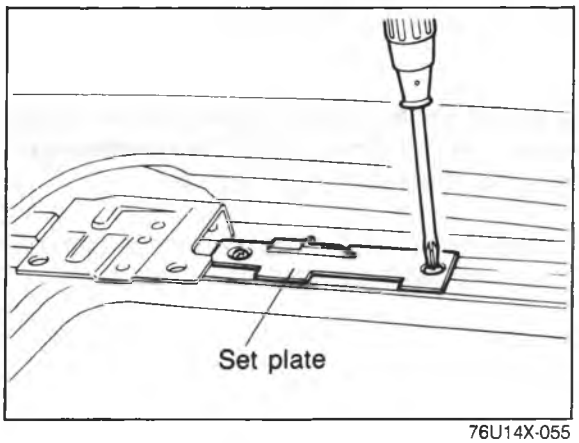

76U14X-055

19. Push the rear guide bracket backward and downward about **10 cm (3.9 in)**.
20. Remove the screw and the set plate.

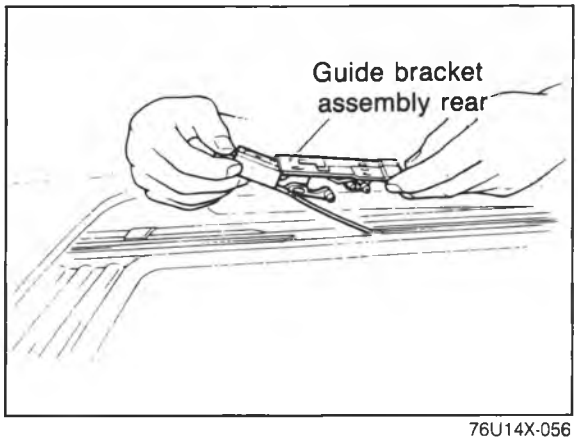

76U14X-056

21. Move the rear guide bracket all the way forward, and pull out while lifting from the rear.
22. Move the drip rail forward then pull out from the notch of the guide rail.

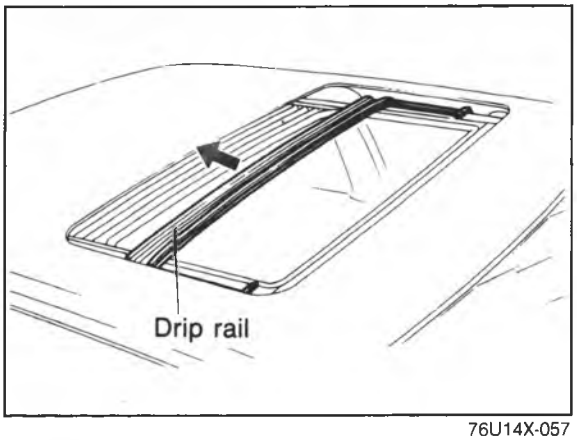

76U14X-057

INSTALLATION

1. Insert the drip rail.

Note
Paying attention to the direction of the rail, push in from the open part to the position where it is not visible.

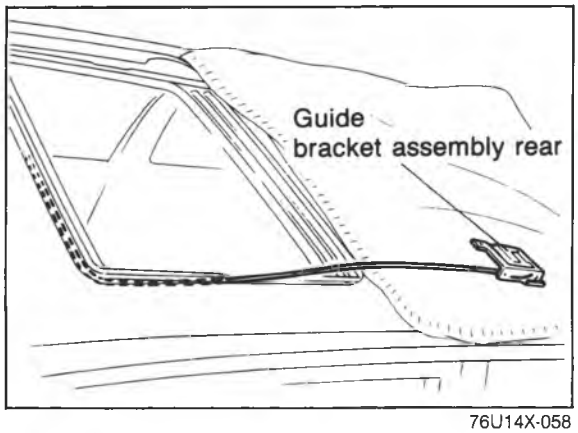

76U14X-058

2. Insert the drive cable into the tube.

Note
Apply a liberal coat of grease to the drive cable and the sliding part of the guide bracket assembly (rear), then push the cable all the way forward.

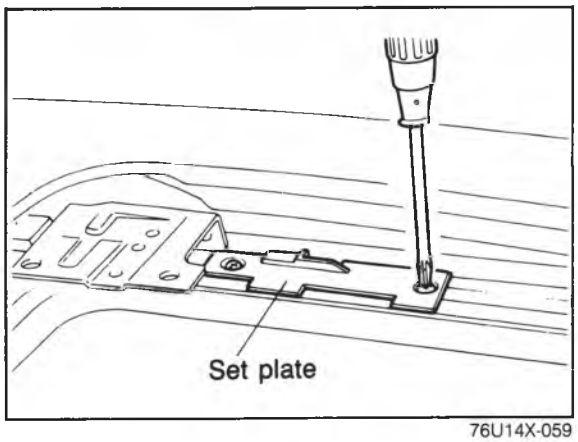

76U14X-059

3. After moving the guide bracket assembly slightly toward the rear, tighten the screw, taking care regarding the direction the set plate faces.

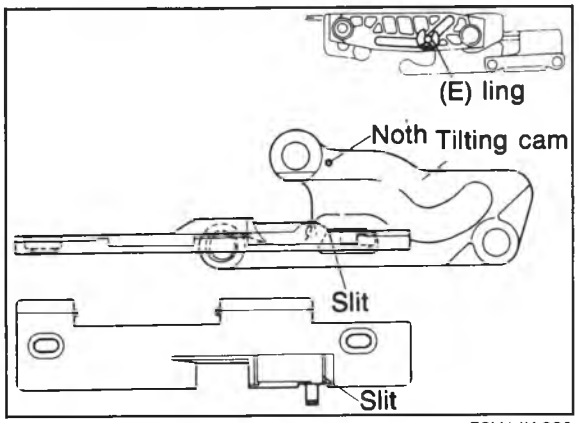

76U14X-060

4. Align the projection of the tilting cam and the slit in the set plate.

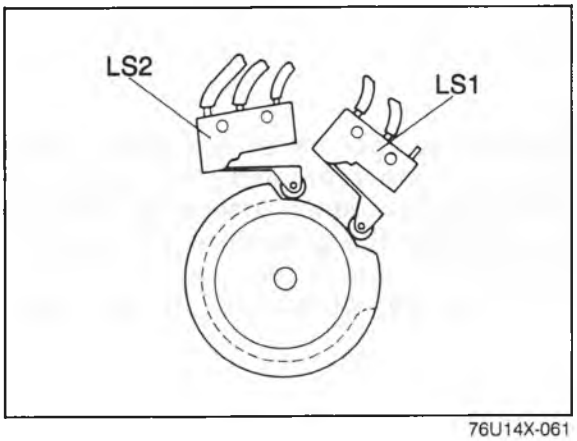

76U14X-061

5. Check that the limit switches (LS1 and LS2) of the motor are as shown in the figure at the OFF position.

Note
a) Be careful of the cam position.
b) Use the handle to position it correctly.

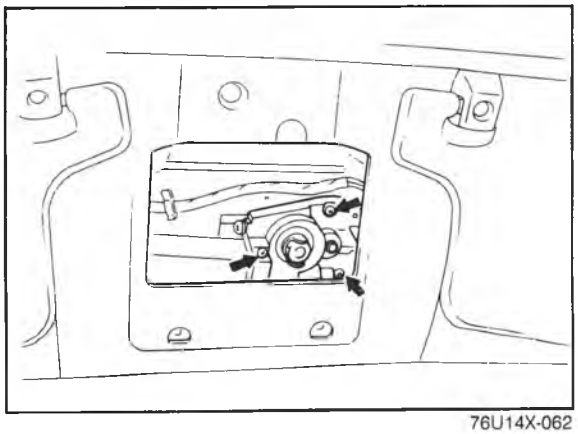

76U14X-062

6. Install the motor assembly.

Note
There are 2 types of screws, long and short. Be sure to use the correct ones.

7. Connect the wiring of the motor assembly and the motor switch.

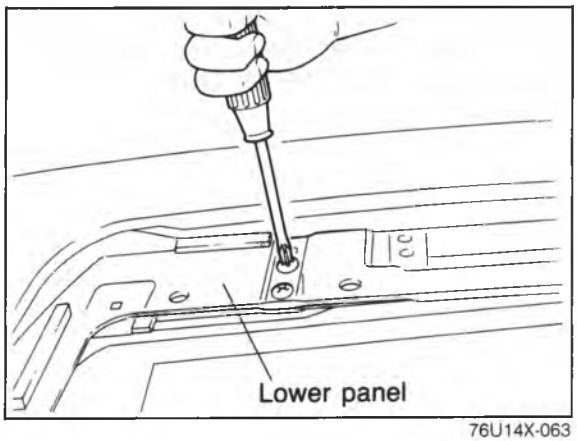

76U14X-063

8. Install the lower panel and tighten the screws.
9. Install the guide front and tighten the screws.

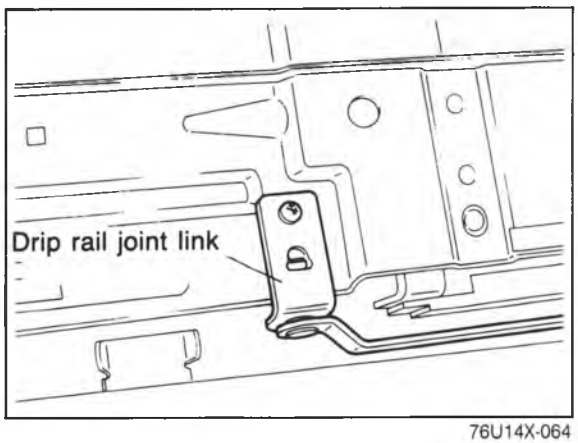

76U14X-064

10. Pull out the drip rail from the rear, and secure the link by the screw.

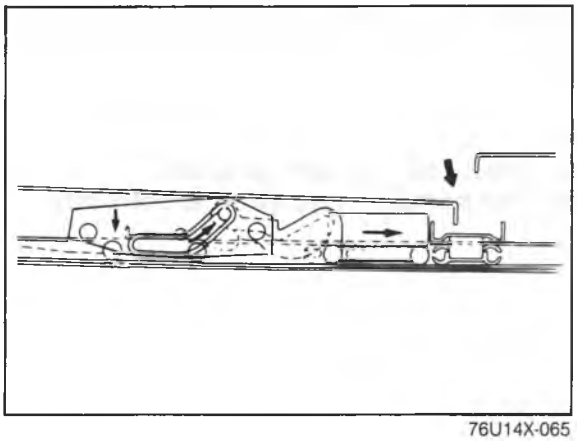

76U14X-065

11. Using the handle turn the motor to fully open the lower panel.

Note

a) Because the roof panel and lower panel might interfere with each other when the lower panel is opened, check as shown in the figure, that the guide roller is completely fitted into the guide rail.

b) Turn the motor while pushing the cable.

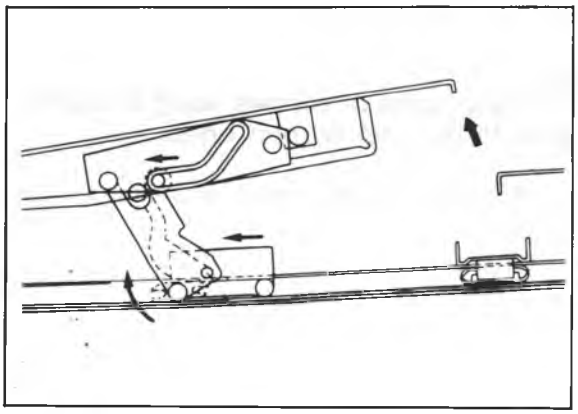

76U14X-066

12. Secure the deflector by tightening the screw, and then install the deflector link.
13. Turn the motor using the handle, and visually check the sliding, tilt-down and tilt-up operations.

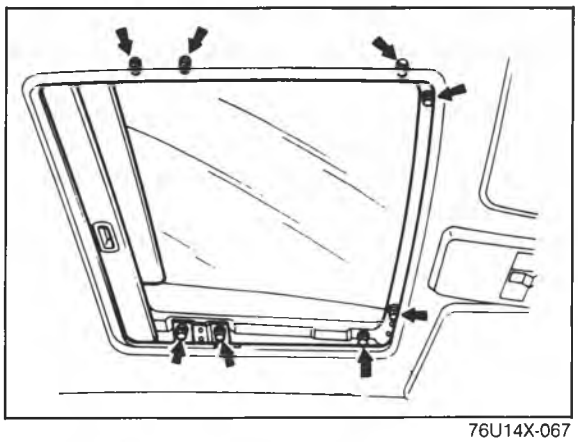

76U14X-067

14. Fully close the lower panel.
15. Install the slide panel to the lower panel, and tighten securely.

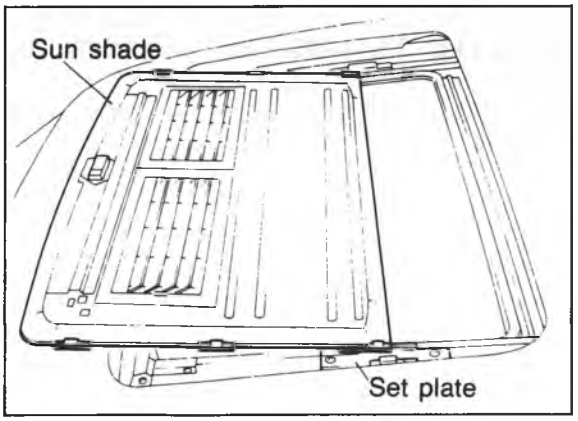

76U14X-068

16. Insert the sun shade from the notch in the set plate, and push it all the way back.
17. Insert the set plate cap.

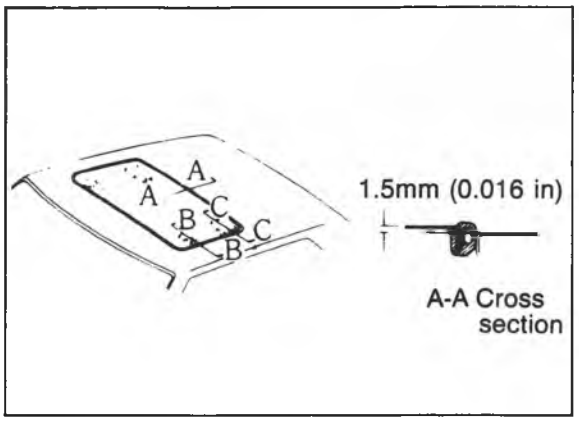

76U14X-069

18. Adjust the height of the slide panel.

(Cross-section A-A)
Adjust so that the height difference between the outer panel and roof panel is **1.5 mm (0.06 in) max**.

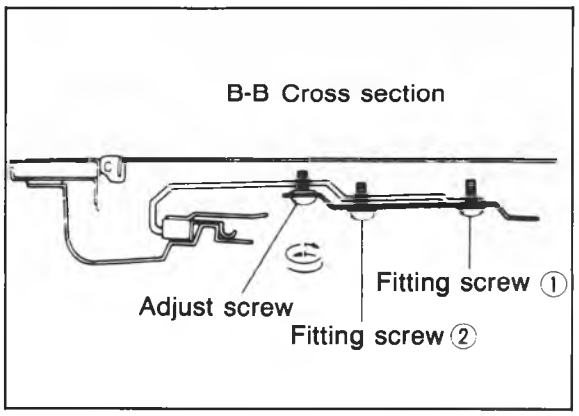

76U14X-070

(Cross-section B-B adjustment)
(1) Loosen installation screws (1) and (2).
If the adjustment is only about **2 mm (0.08 in)** don't loosen screw (1).
(2) Turn the screws to adjust.
Turning to the right raises, and to the left lowers.
(3) Tighten installation screws (1) and (2).

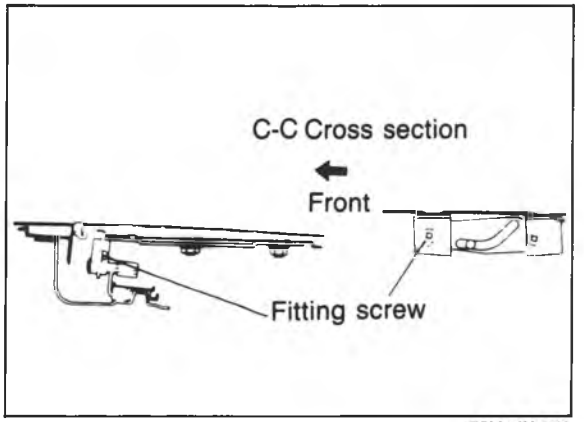

76U14X-071

(Cross-section C-C adjustment)
(1) Loosen the installation screw and the adjust screw.
The adjustment will be easier if the installation screw is not loosened too much.
(2) Adjust by moving the outer panel from the inside or outside.
(3) Tighten the adjust screw first, and then the installation screw.

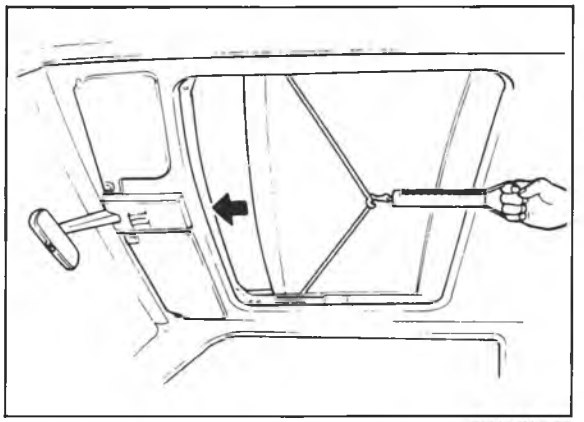
76U14X-072

19. Measure the moving load of the panel, and adjust it to **15—25 kg (33.1—55.7 lb)** using the torque adjustment nut on the motor.
20. To measure, use the deep hole in the center of the lower panel.

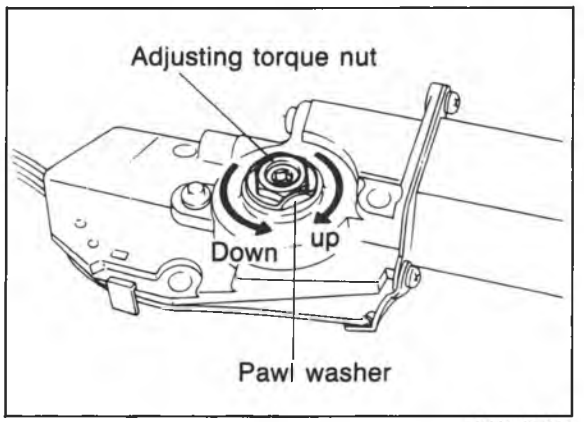

76U14X-073

21. After adjustment, be sure to lock the nut with the pawl washer.
22. Install the ornamental cover.
23. Install the front peripheral parts.

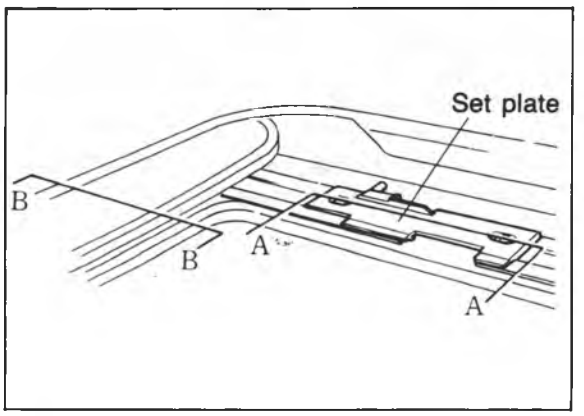

76U14X-202

24. After installation is completed, check the operation.
(1) Is the battery voltage correct?
(2) Is there any foreign material on the sliding parts of the sunroof?
(3) When the slide panel is opened, does the roof panel interfere with the rear part? If so, open the slide panel fully and move the set plate forward.

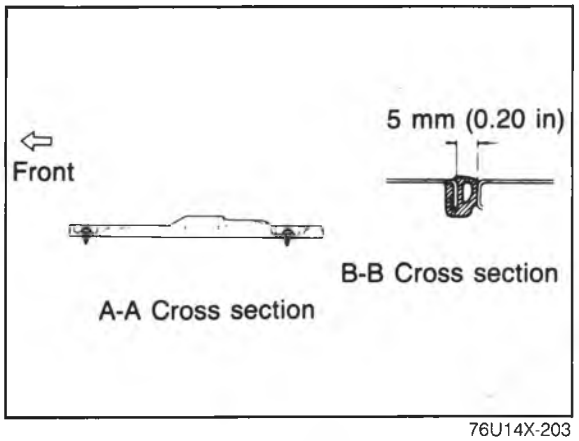

76U14X-203

Caution:
If the stopper is moved too far forward, there might be a malfunction or leaking. Do not leave a gap of more than 5 mm (0.2 in) between the slide panel and roof panel.

WINDSHIELD WIPER

STRUCTURAL VIEW

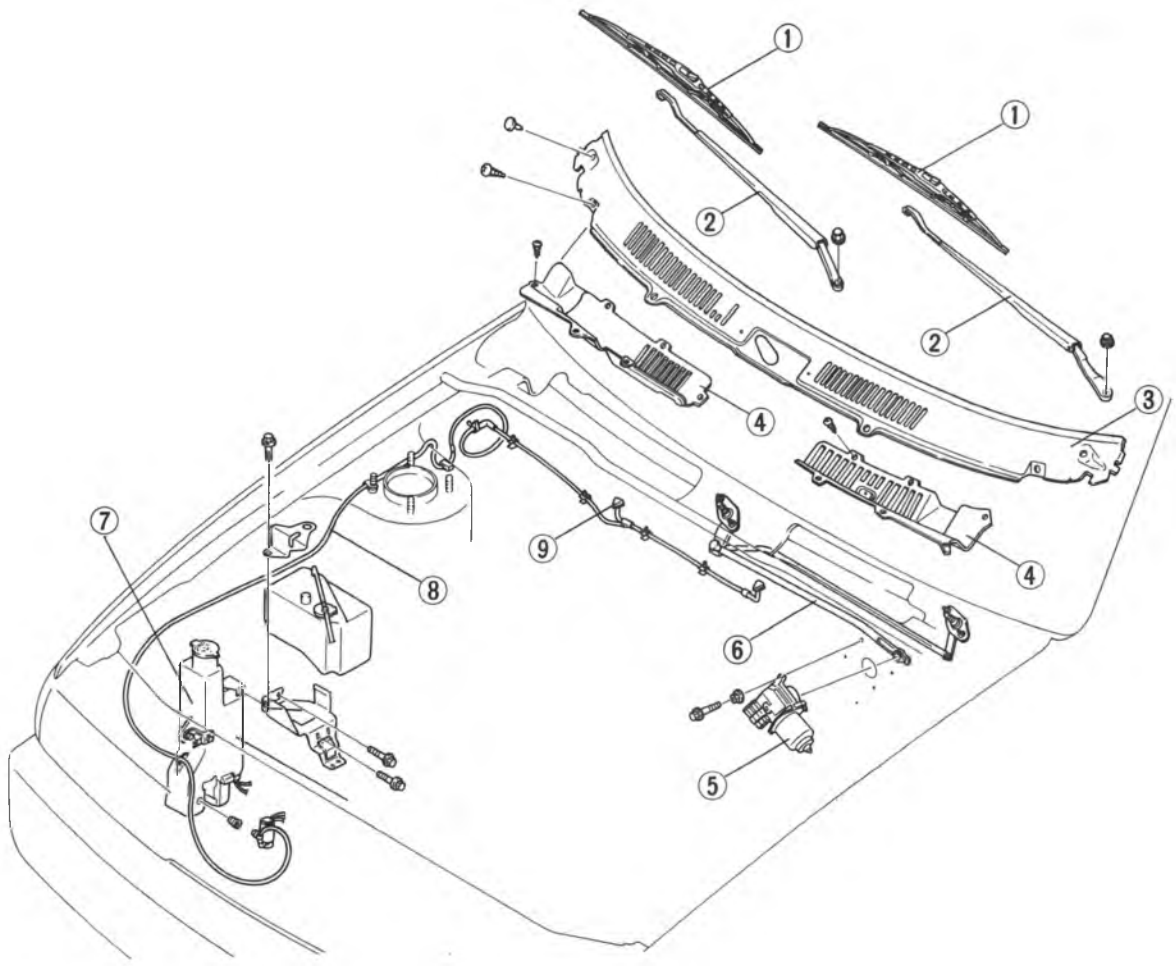

Note
The wiper arms not interchangeable.

63U14X-132

1. Wiper blade
2. Wiper arm
3. Lower molding
4. Cover
5. Wiper motor
6. Link assembly
7. Washer tank
8. Hose
9. Washer nozzle

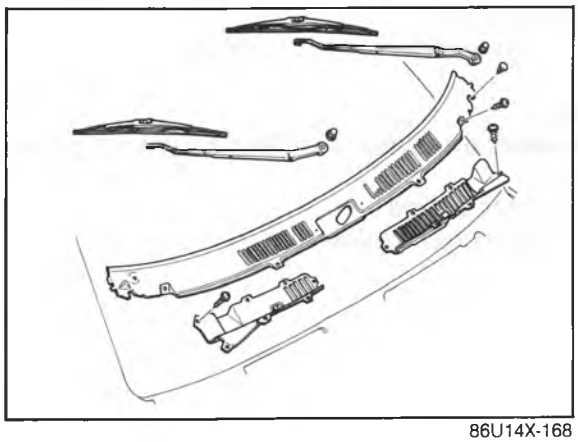

86U14X-168

REMOVAL

1. Disconnect the negative battery cable.
2. Remove the wiper arms.
3. Remove the lower molding.
4. Remove the cover.

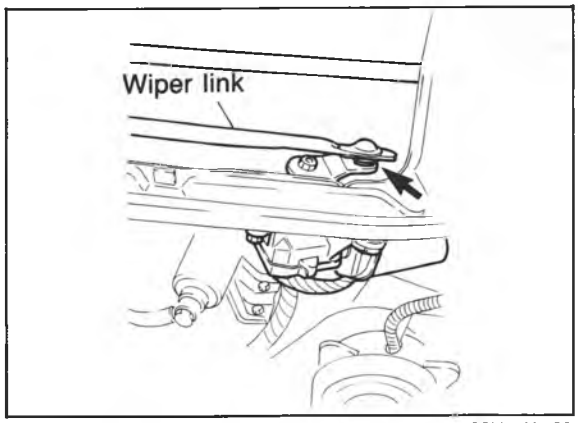

86U14X-169

5. Disconnect the wiper link from the motor.

Caution
Do not remove the motor arm unless necessary. The motor arm position on the motor shaft decides the automatic stop position. (lowest position of the wiper arm)

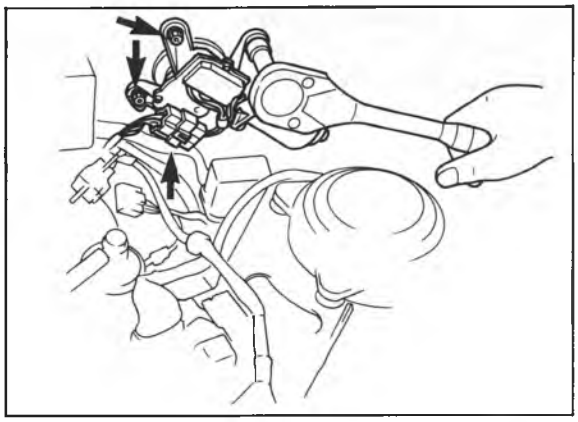

86U14X-170

6. Disconnect the connector.
7. Remove the wiper motor.

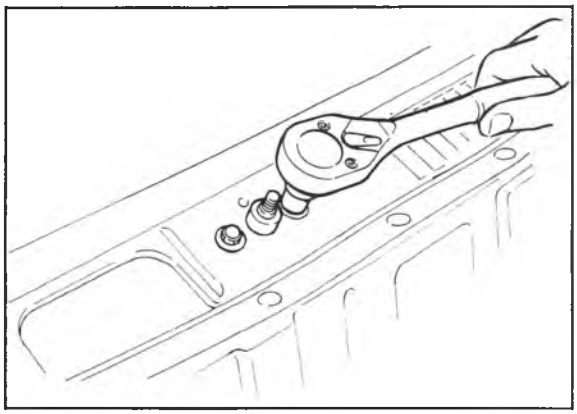

86U14X-171

8. Remove the wiper link assembly mounting bolts.
9. Lift the wiper link assembly out from the left side (driver's side) service hole.

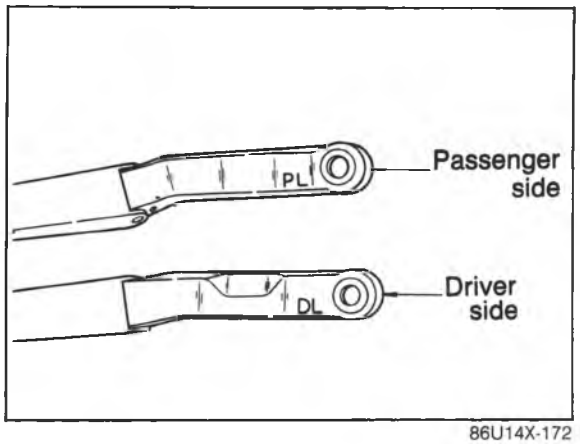

86U14X-172

INSTALLATION

Install in the reverse order of removal.

Note
The wiper arms are identified by marks on the arms.
DL: driver's side
PL: passenger's side

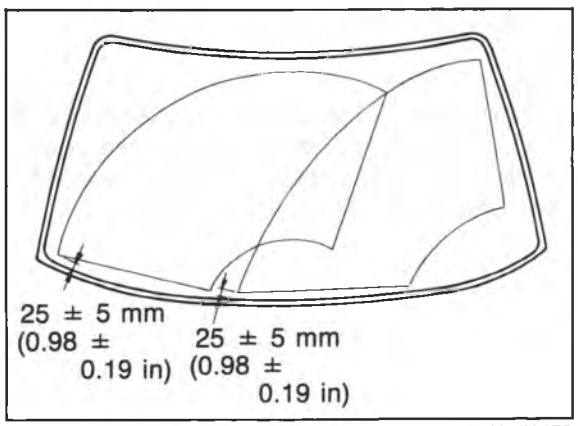

86U14X-173

ADJUSTMENT

Arm Height

Set the arm height as shown in the figure.

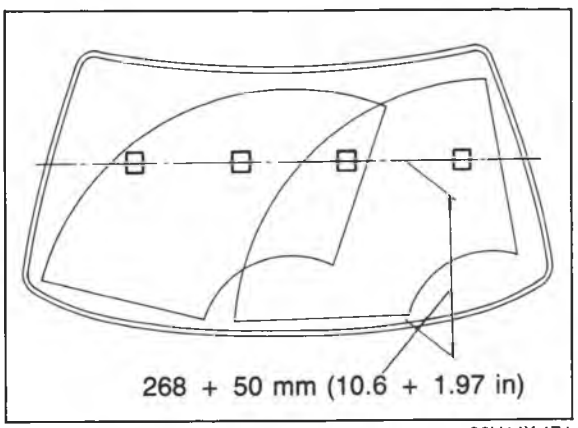

86U14X-174

Adjustment of washer spray

Inserting a needle or similar object into the nozzle hole and bend to change the spray direction.

REAR WINDOW WIPER

STRUCTURAL VIEW (TOURING SEDAN)

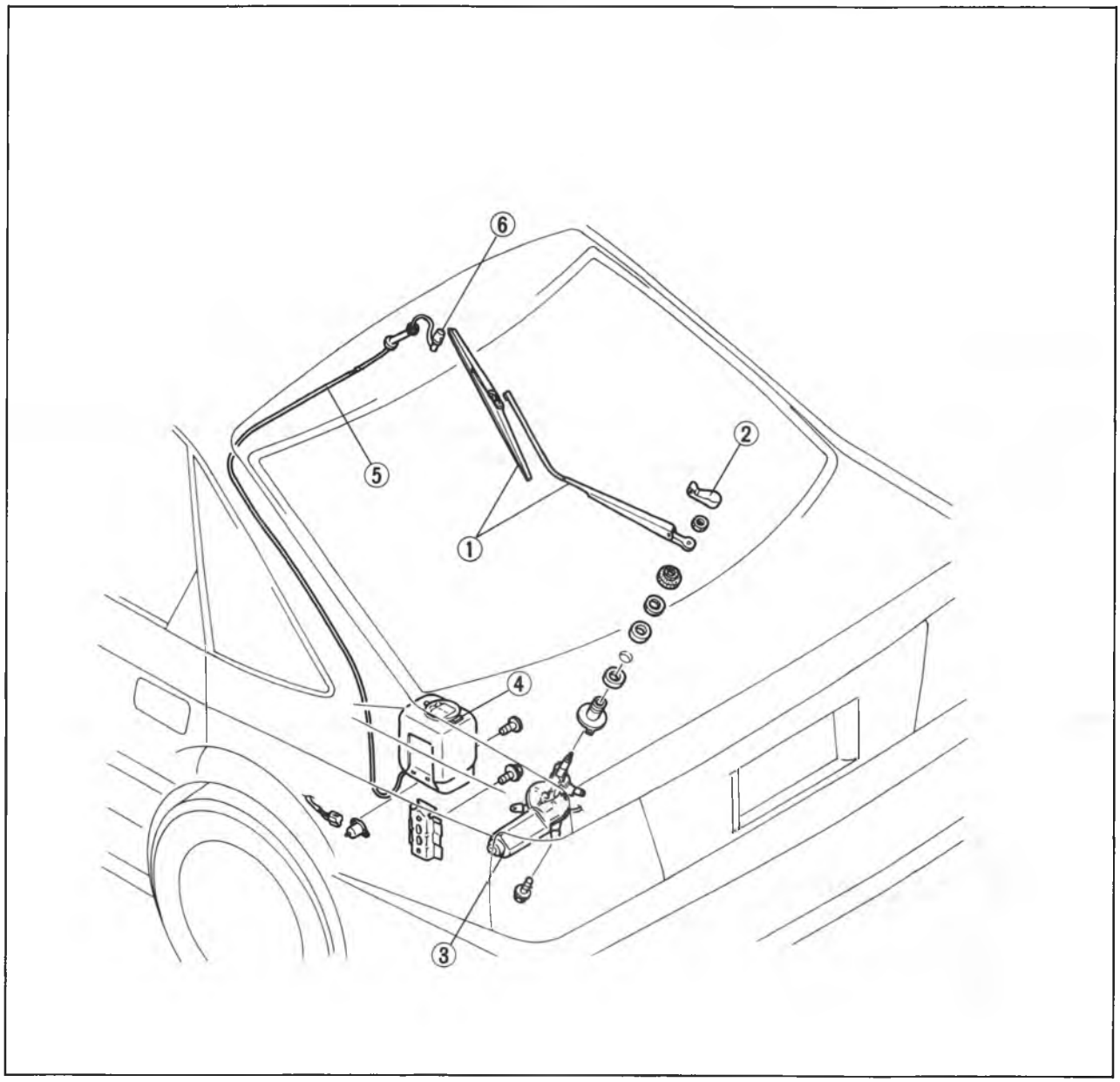

86U14X-175

1. Wiper arm and blade
2. Seal cap
3. Wiper motor
4. Washer tank
5. Hose
6. Washer nozzle

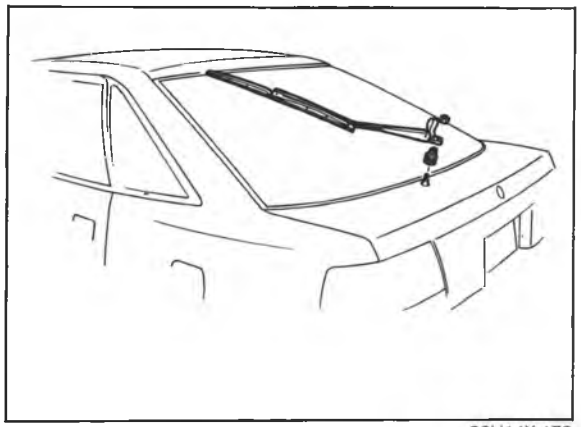

86U14X-176

REMOVAL

1. Disconnect the negative battery cable.
2. Remove the wiper arm.
3. Open the rear hatch.

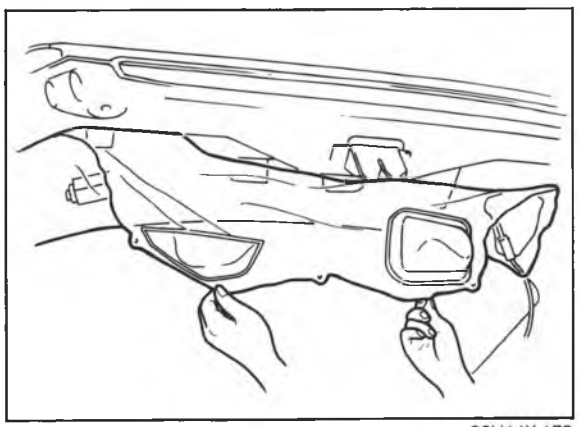

86U14X-178

4. Remove the rear hatch trim (upper, side and lower).
5. Remove the rear hatch screen.

Note
Remove the screen carefully so that it may be reused.

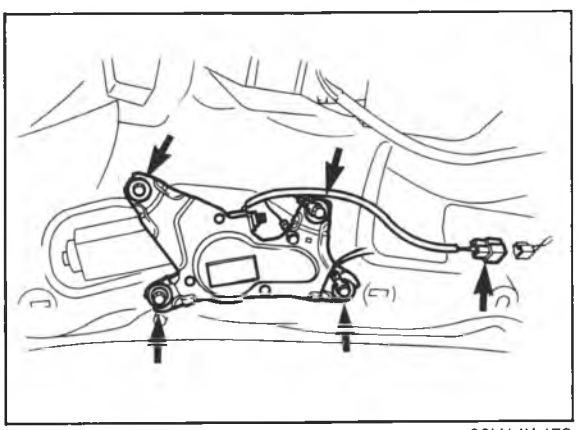

86U14X-179

6. Disconnect the rear wiper motor connector.
7. Remove the rear wiper motor.

INSTALLATION

Install in the reverse order of removal.

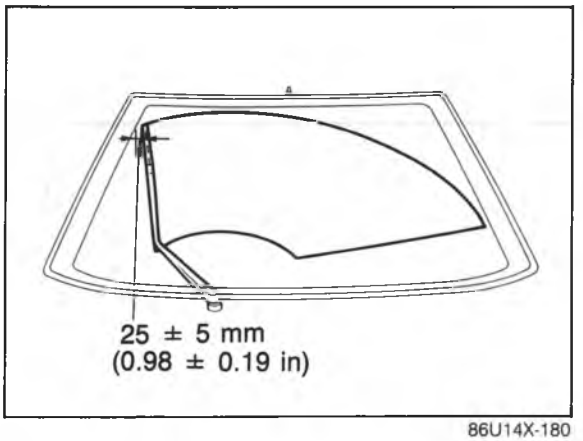

86U14X-180

ADJUSTMENT

Arm Height

Set the height as shown in the figure.

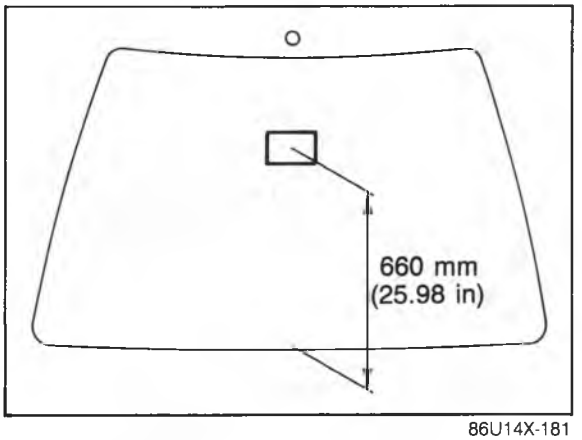

86U14X-181

Adjustment of washer spray

Insert a needle or similar object into the nozzle hole and bend to change the spray direction.

SEAT

STRUCTURAL VIEW

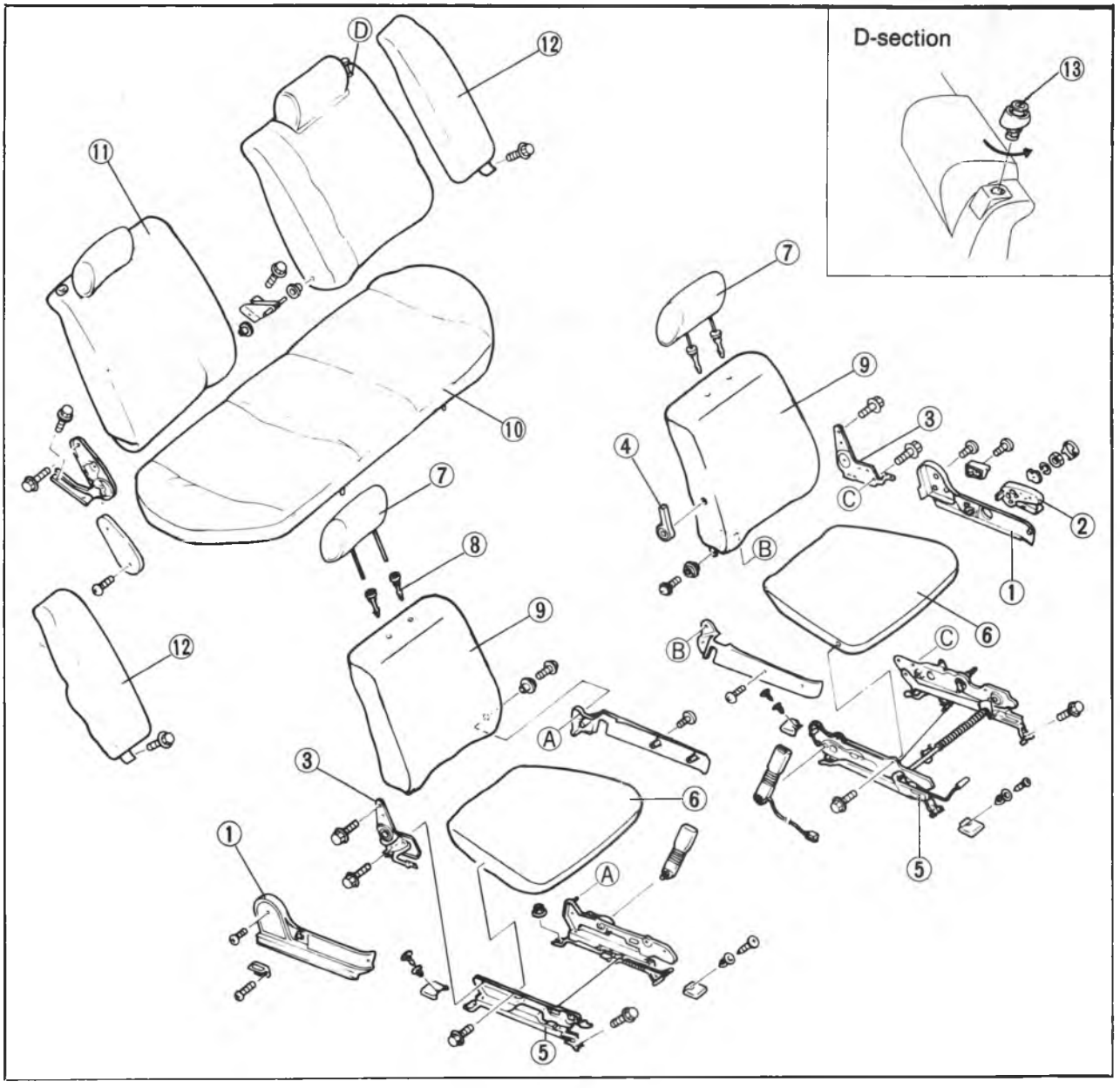

86U14X-182

1. Seat side cover
2. Lifter lever
3. Reclining knuckle
4. Lumbar support lever
5. Seat adjuster
6. Front seat cushion
7. Headrest
8. Headrest pole
9. Front seat back
10. Rear seat cushion
11. Rear seat back
12. Seat side
13. Key cylinder

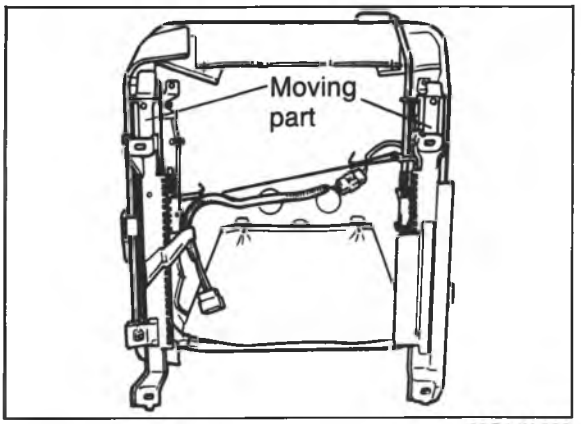

69G14X-228

INSPECTION

Inspection of Front Seat

1. Check that the seat adjuster lever and recliner knuckle lever move smoothly.
2. Check the seat mounting bolts for looseness. If necessary, tighten the bolts to the specified torque.

   Tightening torque:
   Seat mounting bolt: 38—51 N·m (3.9—5.2 m-kg, 28—38 ft-lb)

3. Apply grease to the moving parts.
4. Check the seat adjuster lever for wear.

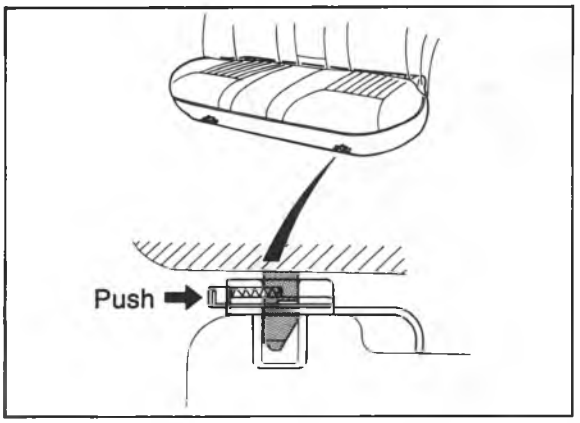

69G14X-235

REAR SEAT

Removal

1. Push the locks as shown in the figure to release the cushion, then lift the seat cushion out.

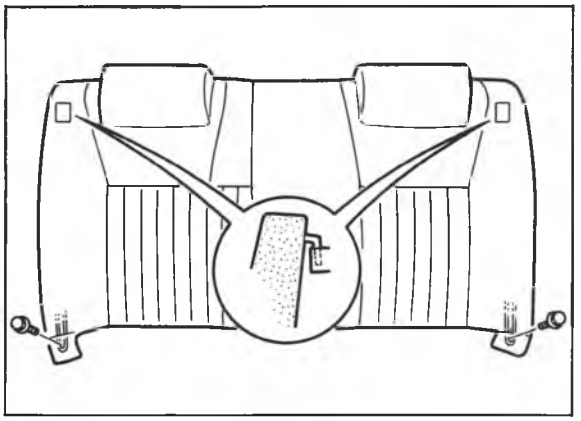
69G14X-236

2. Remove the end bolts, and lift the seat back off the hooks.

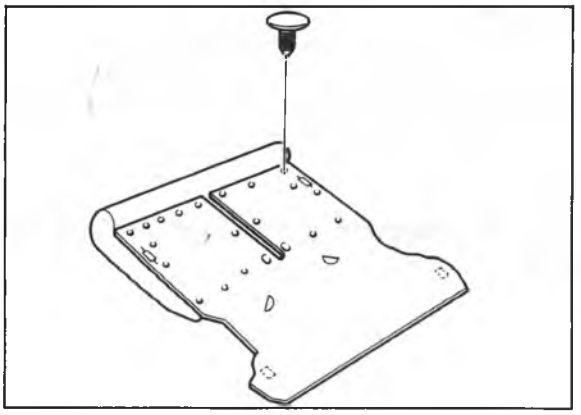
86U14X-184

3. Remove the fastener.
4. Remove the seat back.

Installation

Install in the reverse order of removal.

Note
Tightening torque:
Seat back:
16—23 N·m (1.6—2.3 m-kg, 12—17 ft-lb)

SEAT BELTS (STANDARD SHOULDER BELT)

STRUCTURAL VIEW

86U14X-186

1. Buckles
2. Front seat belts
3. Rear seat belts
4. Retractors
5. Retractors

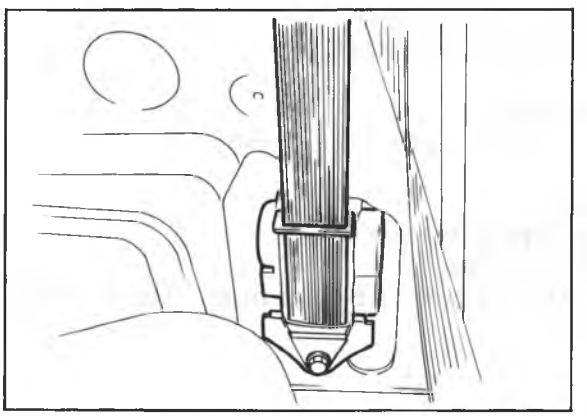

86U14X-187

INSPECTION

1. Check that the belt can be pulled out smoothly and that it retractors lock when belt pulled quickly.
2. Inspect the webbing for scars, tears, and wear and for deformation of the fittings.

Caution
Do not disassemble the buckle or ELR assembly.

SEAT BELTS (AUTOMATIC SHOULDER BELTS)

STRUCTURAL VIEW

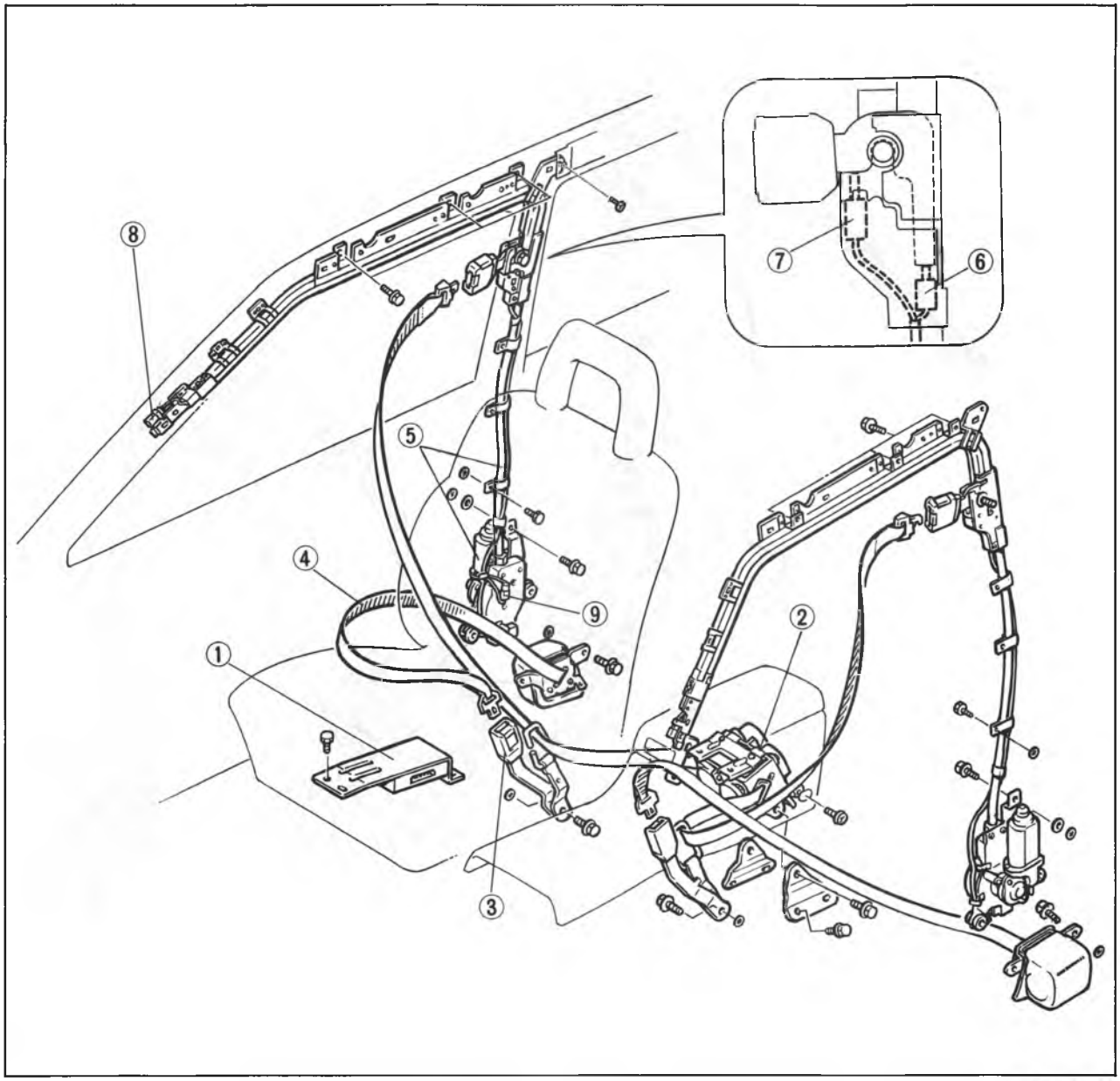

86U14X-188

1. Automatic shoulder belt control unit
2. Automatic shoulder belt retractor
3. Inner buckle
4. Outer lap belt
5. Automatic shoulder belt motor and rail
6. Limit switch (Rear)
7. Seat belt warning switch
8. Limit switch (Front)
9. Deflection sensor

Tightening Torque

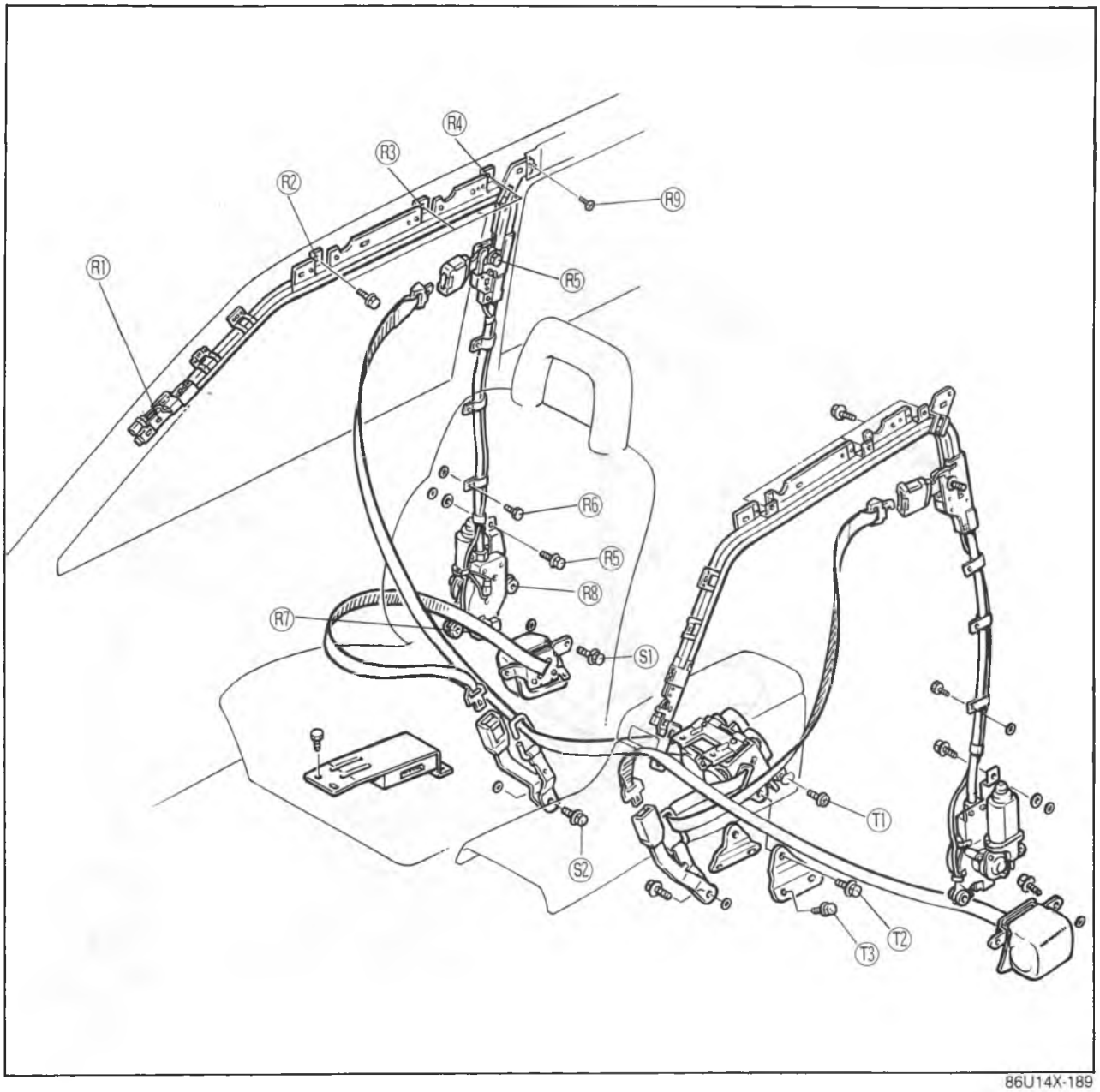

86U14X-189

Part	Assembly order	Tightening Torque
Automatic shoulder belt motor and rail	R_1	7.8—12 N·m (0.8—1.2 m-kg, 5.8—8.7 ft-lb)
	R_2	7.8—12 N·m (0.8—1.2 m-kg, 5.8—8.7 ft-lb)
	R_3	7.8—12 N·m (0.8—1.2 m-kg, 5.8—8.7 ft-lb)
	R_4	7.8—12 N·m (0.8—1.2 m-kg, 5.8—8.7 ft-lb)
	R_5	38—78 N·m (3.9—8.0 m-kg, 28—58 ft-lb)
	R_6	7.8—12 N·m (0.8—1.2 m-kg, 5.8—8.7 ft-lb)
	R_7	7.8—12 N·m (0.8—1.2 m-kg, 5.8—8.7 ft-lb)
	R_8	7.8—12 N·m (0.8—1.2 m-kg, 5.8—8.7 ft-lb)
	R_9	7.8—12 N·m (0.8—1.2 m-kg, 5.8—8.7 ft-lb)
Lap belt	S_1	38—78 N·m (3.9—8.0 m-kg, 28—58 ft-lb)
	S_2	38—78 N·m (3.9—8.0 m-kg, 28—58 ft-lb)
Inner buckle	T_1	38—78 N·m (3.9—8.0 m-kg, 28—58 ft-lb)
	T_2	38—78 N·m (3.9—8.0 m-kg, 28—58 ft-lb)
	T_3	38—78 N·m (3.9—8.0 m-kg, 28—58 ft-lb)

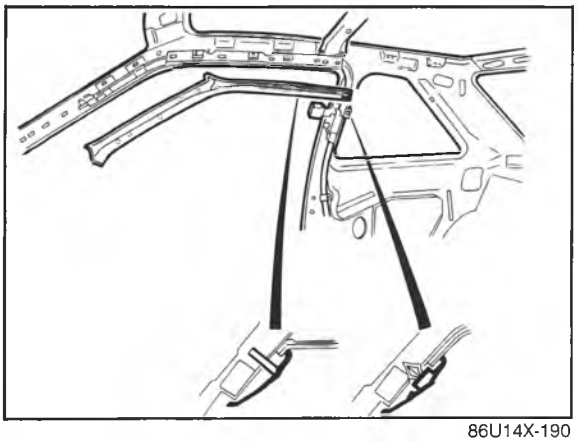

86U14X-190

REMOVAL

1. Remove the front pillar trim.

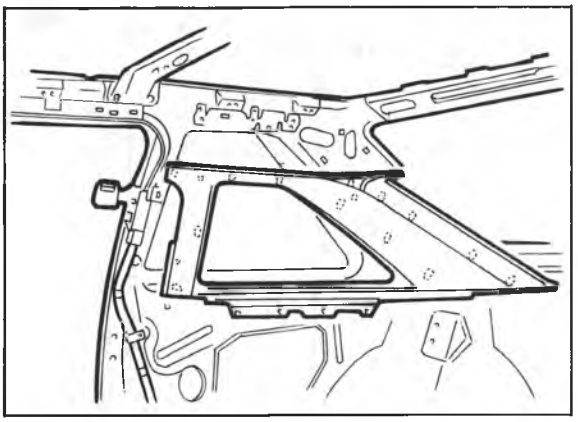

86U14X-191

2. Remove the rear pillar trim and side trim.

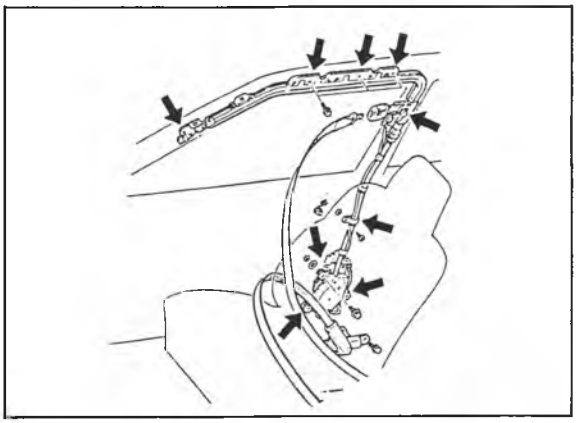

86U14X-192

3. Remove the mounting bolts.
4. Remove the passive shoulder belt motor and rail.

INSTALLATION

Install in the reverse order of removal.

UNDERBODY PROJECTED DIMENSIONS

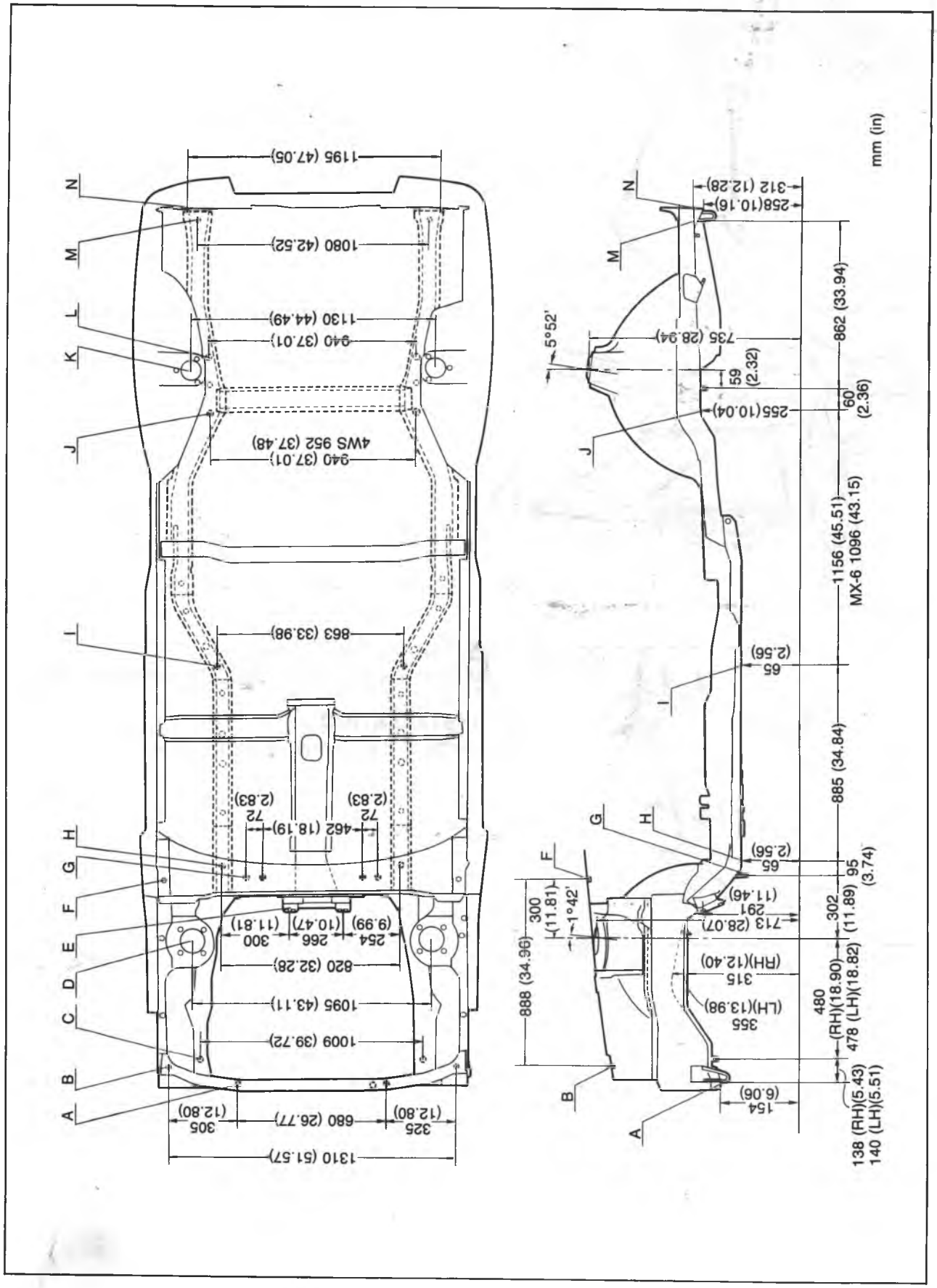

86U14X-193

A: Frame mounting nut (M10)
B: Front fender panel mounting nut (M6)
C: Crossmember mounting bolt (M12)
D: Front mounting block
E: Steering bracket mounting nut (M12)
F: Front fender panel mounting nut (M6)
G: Frame mounting bolt (M12)
H: Front frame, lower standard hole (8ϕ)

I : Front frame [c], lower standard hole (12ϕ)
J : Crossmember mounting nut (M10)
(Crossmember mounting bolt (M10)...4WS)
K : Rear mounting block
L : Crossmember mounting nut (M10)
(Crossmember mounting bolt (M12)...4WS)
M: Rear frame, lower standard hole (10ϕ)
N: Rear bumper mounting hole (14ϕ)
(outside,10wer)

86U14X-193

UNDERBODY STRAIGHT-LINE DIMENSIONS

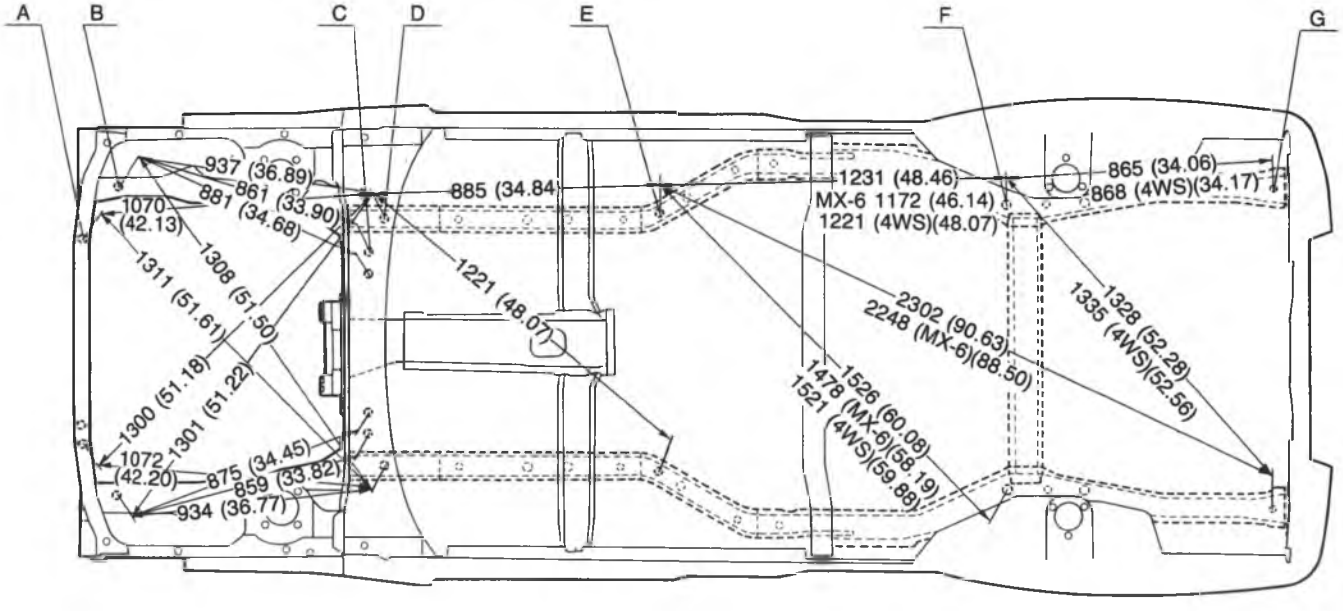

mm (in)

A: Frame mounting nut (M10)
B: Crossmember mounting bolt (M12)
C: Frame mounting bolt (M12)
D: Front frame, lower standard hole (8ϕ)
(Protector mounting nut (M8)... 4WS)

E: Front frame [c], lower standard hole (12ϕ)
F: Crossmember mounting nut (M10)
(Crossmember mounting bolt (M12)... 4WS)
G: Rear frame, lower standard hole (10ϕ)

BODY ELECTRICAL SYSTEM

INTRODUCTION ..... 15— 2
HOW TO USE THIS SECTION ..... 15— 2
ELECTRICAL TROUBLESHOOTING TOOLS ..... 15— 2
PRECAUTION ..... 15— 3
ELECTRICAL SYMBOLS ..... 15— 6
LOCATION OF UNIT RELAY AND SWITCH ..... 15— 7
STRUCTURAL VIEW ..... 15— 7
MAIN FUSE BLOCK ..... 15— 9
STRUCTURAL VIEW ..... 15— 9
REPLACEMENT ..... 15— 9
JOINT BOX AND FUSE ..... 15— 10
STRUCTURAL VIEW ..... 15— 10
IGNITION SWITCH ..... 15— 11
INSPECTION ..... 15— 11
COMBINATION SWITCH ..... 15— 12
STRUCTURAL VIEW ..... 15— 12
INSPECTION ..... 15— 12
CLUSTER SWITCH ..... 15— 15
STRUCTURAL VIEW ..... 15— 15
INSPECTION OF TWO SWITCH TYPE ..... 15— 16
INSPECTION OF FOUR SWITCH TYPE ..... 15— 17
METER ..... 15— 18
STRUCTURAL VIEW ..... 15— 18
DISASSEMBLY AND ASSEMBLY ..... 15— 19
TROUBLESHOOTING ..... 15— 20
INSPECTION OF ANALOG METER ..... 15— 22
INSPECTION OF DIGITAL METER ..... 15— 23
INSPECTION OF METER SENDER ..... 15— 25
WARNING LIGHT AND SENDER ..... 15— 27
CIRCUIT DIAGRAM ..... 15— 27
TROUBLESHOOTING ..... 15— 28
INSPECTION ..... 15— 35
CENTRAL PROCESSING UNIT ..... 15— 37
STRUCTURAL VIEW ..... 15— 37
FUNCTIONS ..... 15— 37
CIRCUIT DIAGRAM ..... 15— 38
REMOVE AND INSTALLATION ..... 15— 39
ON-VEHICLE INSPECTION ..... 15— 39
TURN AND HAZARD LIGHT ..... 15— 40
STRUCTURAL VIEW ..... 15— 40
CIRCUIT DIAGRAM ..... 15— 41
TROUBLESHOOTING ..... 15— 42
INSPECTION ..... 15— 43
STOP LIGHT ..... 15— 44
STRUCTURAL VIEW ..... 15— 44
CIRCUIT DIAGRAM ..... 15— 45
TROUBLESHOOTING ..... 15— 45
INSPECTION ..... 15— 47
HORN ..... 15— 48
STRUCTURAL VIEW ..... 15— 48
CIRCUIT DIAGRAM ..... 15— 48
TROUBLESHOOTING ..... 15— 49
HEADLIGHT ..... 15— 50
STRUCTURAL VIEW ..... 15— 50
CIRCUIT DIAGRAM ..... 15— 50
TROUBLESHOOTING ..... 15— 51
PANEL LIGHT CONTROL ..... 15— 52
CIRCUIT DIAGRAM ..... 15— 52
TROUBLESHOOTING ..... 15— 52
INSPECTION ..... 15— 53
REAR WINDOW DEFROSTER ..... 15— 54
STRUCTURAL VIEW ..... 15— 54
CIRCUIT DIAGRAM ..... 15— 54
TROUBLESHOOTING ..... 15— 55
INSPECTION ..... 15— 56
POWER WINDOW ..... 15— 57
STRUCTURAL VIEW ..... 15— 57
CIRCUIT DIAGRAM ..... 15— 58
TROUBLESHOOTING ..... 15— 59
INSPECTION ..... 15— 62
REMOTE CONTROL MIRROR ..... 15— 65
STRUCTURAL VIEW ..... 15— 65
CIRCUIT DIAGRAM ..... 15— 65
TROUBLESHOOTING ..... 15— 66
INSPECTION ..... 15— 66
REAR WINDOW WIPER ..... 15— 67
STRUCTURAL VIEW ..... 15— 67
CIRCUIT DIAGRAM ..... 15— 68
TROUBLESHOOTING ..... 15— 69
INSPECTION ..... 15— 71
WINDSHIELD WIPER ..... 15— 72
STRUCTURAL VIEW ..... 15— 72
CIRCUIT DIAGRAM ..... 15— 73
TROUBLESHOOTING ..... 15— 74
INSPECTION ..... 15— 77
CRUISE CONTROL SYSTEM ..... 15— 78
STRUCTURAL VIEW ..... 15— 78
CIRCUIT DIAGRAM ..... 15— 79
ON-VEHICLE INSPECTION ..... 15— 80
INSPECTION ..... 15— 83
SLIDING SUNROOF ..... 15— 85
STRUCTURAL VIEW ..... 15— 85
CIRCUIT DIAGRAM ..... 15— 86
TROUBLESHOOTING ..... 15— 87
INSPECTION ..... 15— 88
AUTO ADJUSTING SUSPENSION ..... 15— 90
CIRCUIT DIAGRAM ..... 15— 90
TROUBLESHOOTING GUIDE ..... 15— 90
TROUBLESHOOTING ..... 15— 90
INSPECTION ..... 15—100
POWER DOOR LOCK ..... 15—101
STRUCTURAL VIEW ..... 15—101
CIRCUIT DIAGRAM ..... 15—101
TROUBLESHOOTING ..... 15—102
INSPECTION ..... 15—103
AUTOMATIC SHOULDER BELT ..... 15—104
STRUCTURAL VIEW ..... 15—104
CIRCUIT DIAGRAM ..... 15—105
TROUBLESHOOTING ..... 15—106
INSPECTION ..... 15—107
AUDIO SYSTEM ..... 15—109
OUTLINE OF AUDIO SYSTEM ..... 15—109
REAR CONNECTOR VIEW ..... 15—111
TROUBLESHOOTING ..... 15—116
POWER ANTENNA ..... 15—124
HEATER ..... 15—126
STRUCTURAL VIEW ..... 15—126
AIR FLOW AT EACH MODE ..... 15—127
RATE OF AIR FLOW ..... 15—129
LEVER CONTROL TYPE ..... 15—130
LOGICAL CONTROL TYPE ..... 15—131
LOGICON SWITCH ..... 15—133
THEFT-DETERRENT SYSTEM ..... 15—139
STRUCTURAL VIEW ..... 15—139
CIRCUIT DIAGRAM ..... 15—140
TROUBLESHOOTING ..... 15—141
INSPECTION OF SWITCH ..... 15—145

86U15X-001

INTRODUCTION

HOW TO USE THIS SECTION

Information regarding removal and installation of electrical equipment is given in **SECTION 14.** Understanding will be easier if this section is used in conjunction with the **WIRING DIAGRAMS.**

63U15X-002

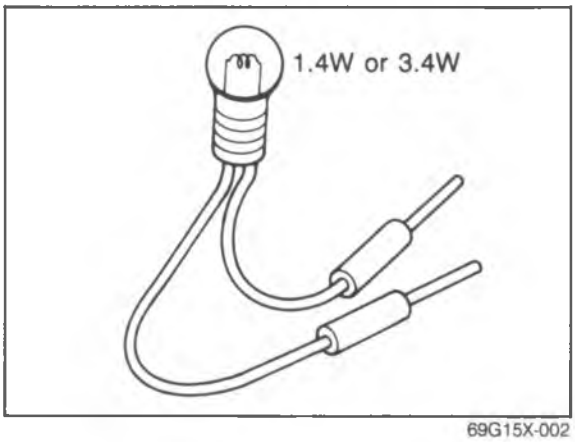

69G15X-002

ELECTRICAL TROUBLESHOOTING TOOLS

Test Light

The test light, as shown in the figure, uses a 12V bulb. The two leads should be connected to probes. The test light is used for simple voltage checks and to check for short circuits.

Caution
When checking the control unit, never use a bulb over 3.4W.

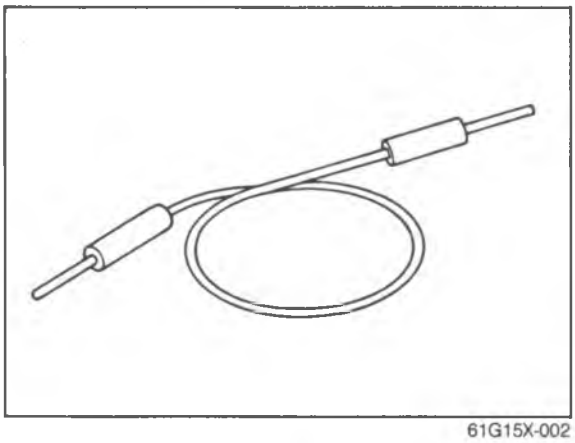

61G15X-002

Jumper Wire

The jumper wire is used for testing by short-circuiting switch terminals and to verify the condition of ground connections.

Caution
Do not connect the jumper wire between a power source line and body ground, because doing so may cause burning or other damage to harnesses or electronic components, etc.

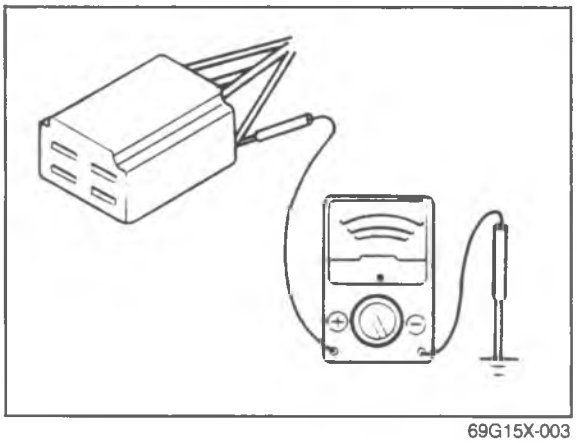

69G15X-003

Voltmeter

The DC voltmeter is used for measurement of circuit voltage. A voltmeter with a range of 15V or more is used. It is used by connecting the positive (+) probe (red lead) to the point where voltage is to be measured and connecting the negative (–) probe (black lead) to the body ground.

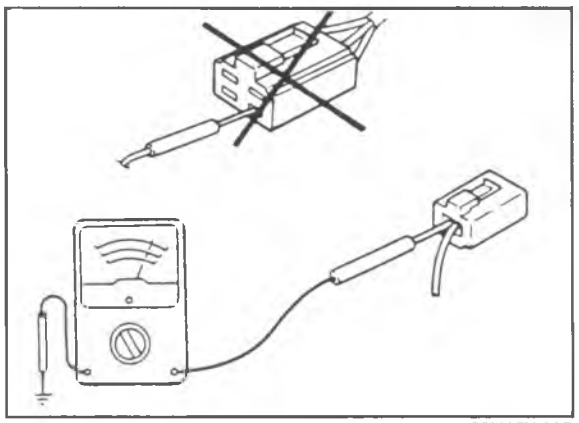

63U15X-005

Ohmmeter
The ohmmeter is used to measure the resistance between two points in a circuit, and is also used to check for continuity and diagnosis of short circuits.

Caution
Do not attempt to connect the ohmmeter to any circuit to which voltage is applied, because doing so may burn or otherwise damage the ohmmeter.

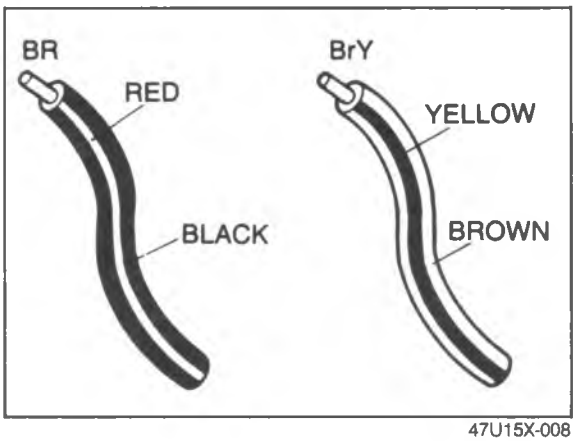

47U15X-008

PRECAUTION
Wiring Color Code
Two-color wires are indicated by a 2-letter symbol. The first letter indicates the base color of the wire and the second indicates the color of the stripe.

CODE	COLOR
B	BLACK
Br	BROWN
G	GREEN
L	BLUE
Lb	LIGHT BLUE
Lg	LIGHT GREEN
O	ORANGE
R	RED
Y	YELLOW
W	WHITE

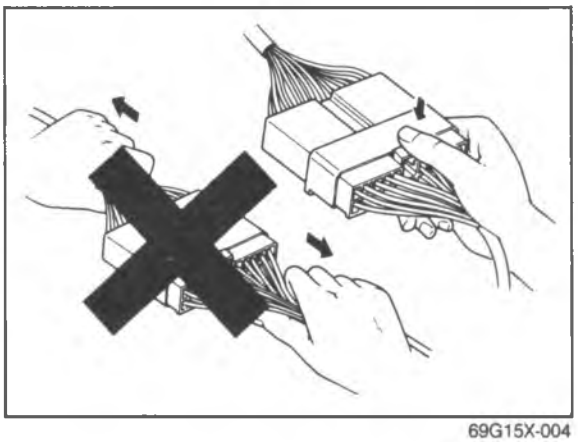

69G15X-004

Bulkhead-Type Connector
This connector can be separated by pressing the lock lever.
Do not pull the wire when removing the connector; be careful to hold the connector itself when disconnecting.

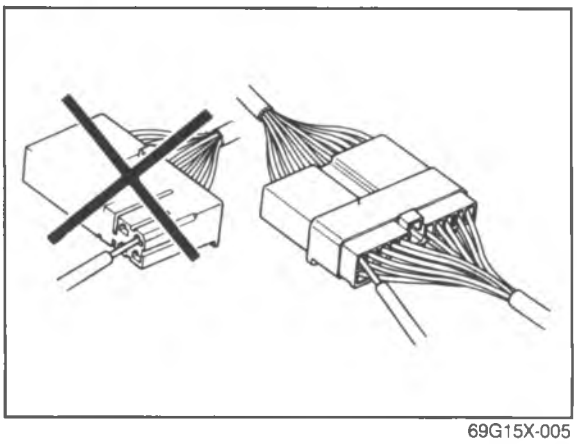

69G15X-005

Inspection note
When checking the continuity or voltage with a circuit tester, insertion of the test probe into the receptacle connector may open the fitting of the connector and result in poor contact.
Therefore, insert the test probe only from the wire harness side.

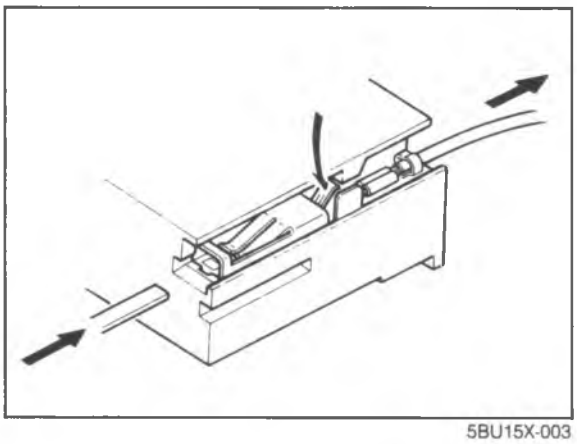

5BU15X-003

Replacement of Terminal
Use the appropriate tools to remove the terminal, as shown in the figure.
When installing a terminal, be sure to press it in until it locks securely.

<Female Type No.1>
Insert a push-tool or thin piece of metal from the terminal side of the connector, and then, with the locking tabs of the terminal pressed down, pull the terminal out from the rear side.

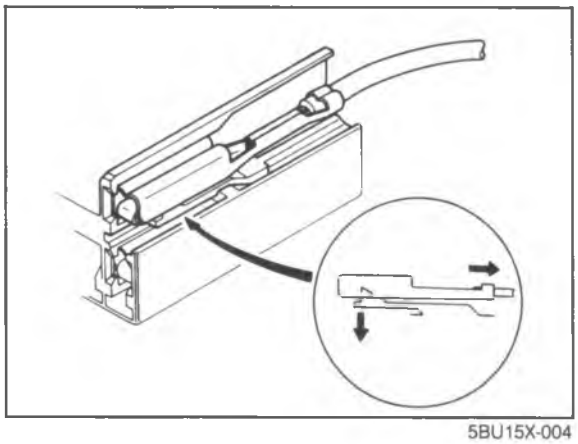

5BU15X-004

<Female Type No.2>

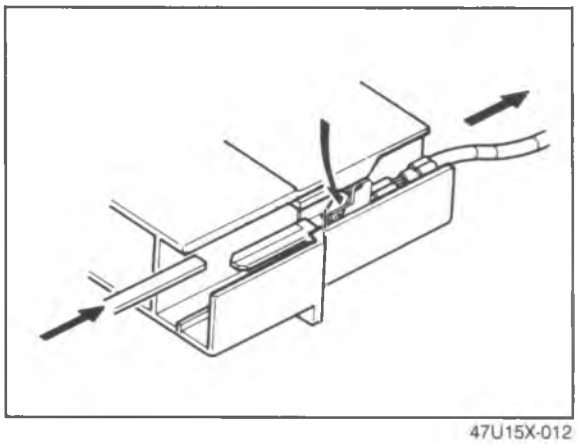

47U15X-012

<Male Type>
Same as the female type.

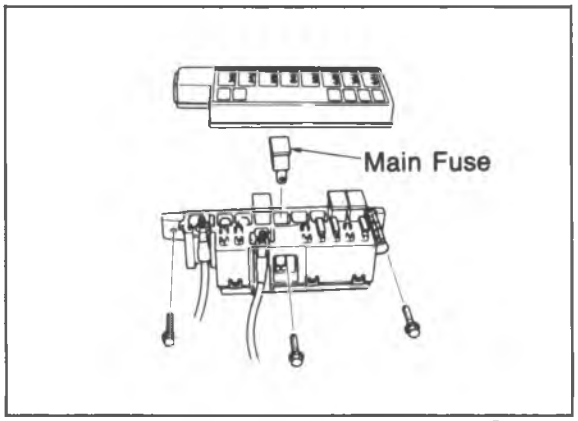

69G15X-006

Replacement of Fuse

1. When replacing a fuse, be sure to replace it with one of the specified capacity.
   If, after a fuse has been replaced, it fails again, there is probably a short in the circuit, and the wiring should be checked.
2. Be sure the negative battery terminal is disconnected before replacing a main fuse.

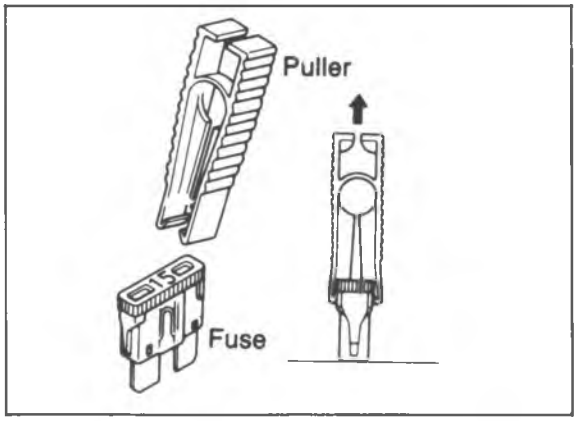

4BG15X-003

3. When replacing a fuse, use the supplied fuse puller in the fuse box cover.

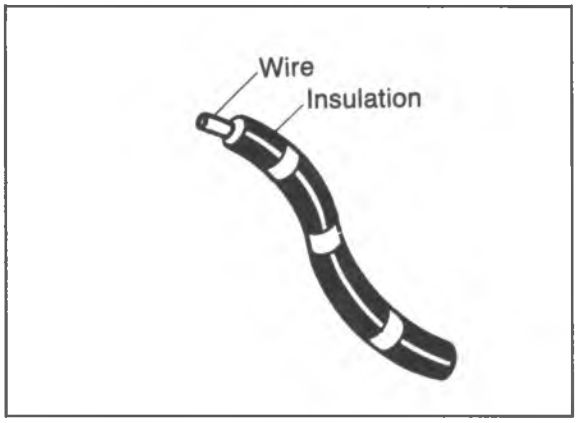

69G15X-007

Thin Insulation Wire

To reduce the weight of the wiring harness, a thin coating of high resistance insulation material is used.

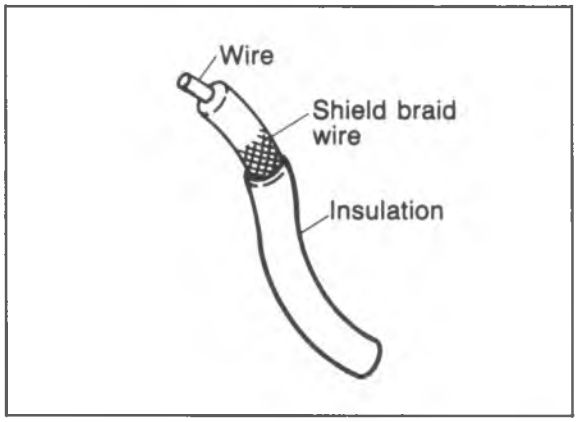

69G15X-008

Shielded braid wire

This wire is used to prevent a malfunction in important circuits that are susceptible to outside signals or interference.

Eg.

- Ignition coil
- O_2 sensor

ELECTRICAL SYMBOLS

Switches and Relays

There is an NC (normally closed) and NO (normally open) indication for switches and relays; this indicates the condition when there has been no change of operating conditions.

	Relay		Switch	
	NO type relay	NC type relay	NO switch	NC switch
Not in operation (No power supply)	Stop	Flow	Stop	Flow
In operation (Power supply)	Flow	Stop	Flow	Stop

Other Electrical Symbols

		Holder Box	
BATTERY	BODY GROUND	FUSE	FUSIBLE LINK
M			
MOTOR	COIL, SOLENOID	RESISTOR	VARIABLE RESISTOR
			3.4
THERMISTER	DIODE	CONDENSER	LIGHT
TRANSISTOR	SPEAKER	CIGARETTE LIGHTER	HEATER

69G15X-009

LOCATION OF UNIT, RELAY AND SWITCH

STRUCTURAL VIEW

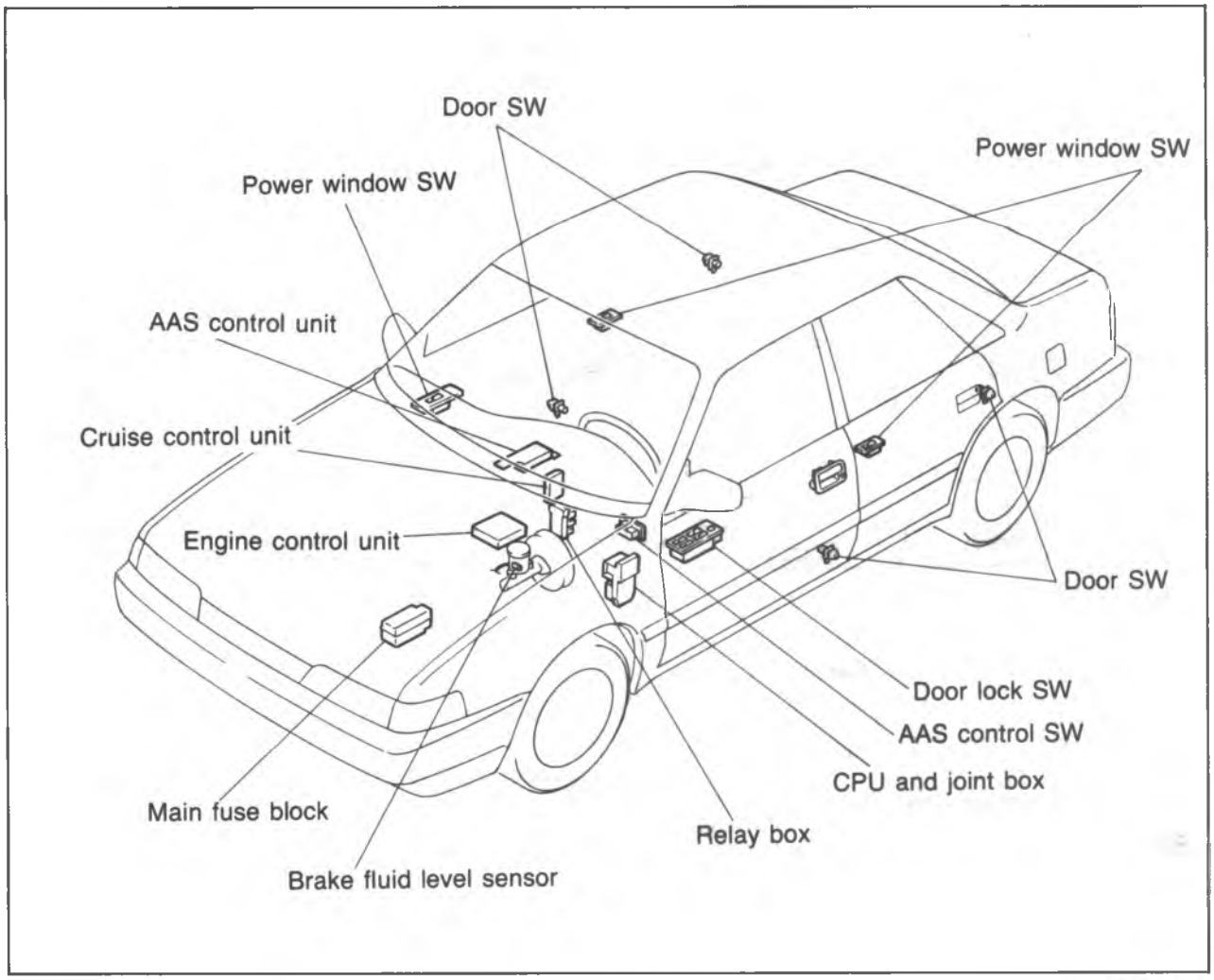

86U15X-002

STRUCTURAL VIEW

Touring sedan

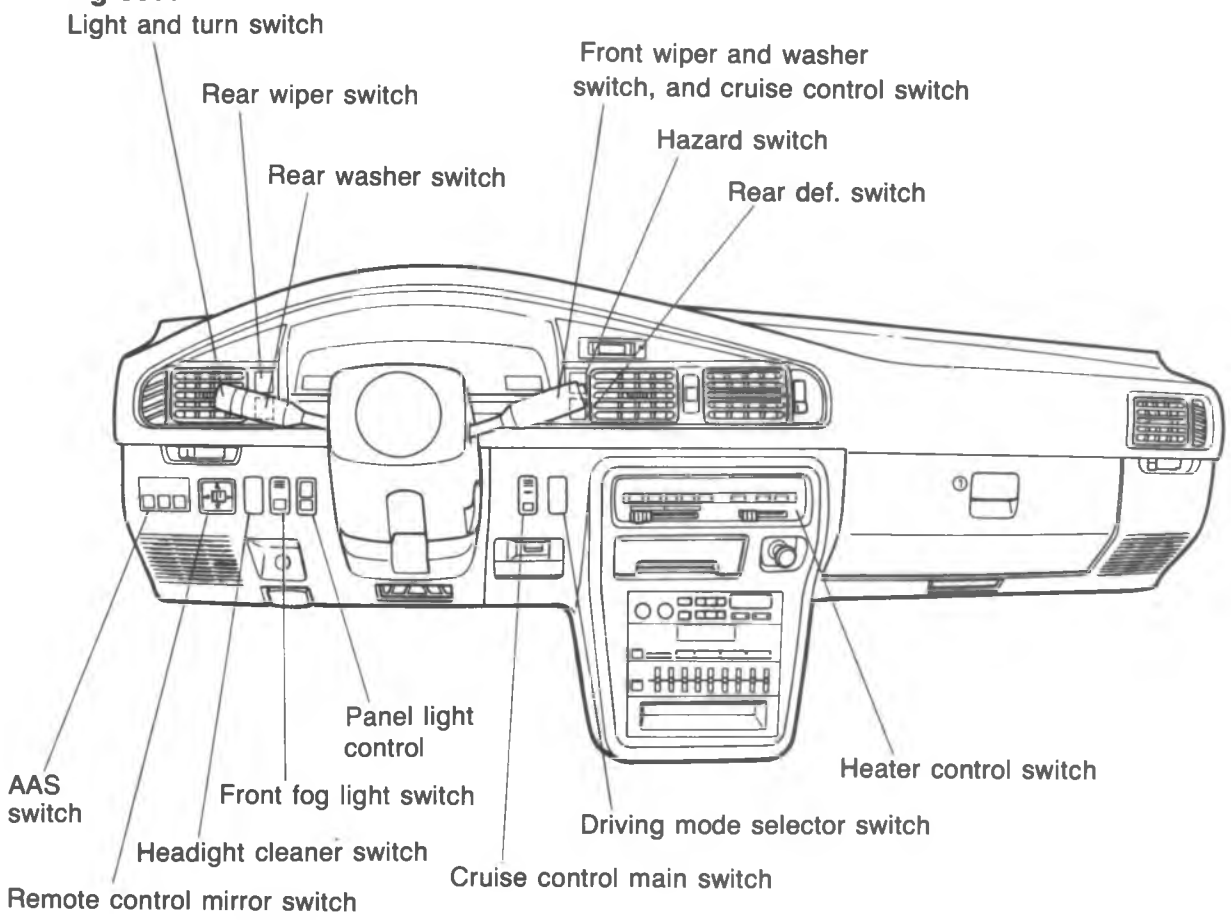

MX-6 and Sedan

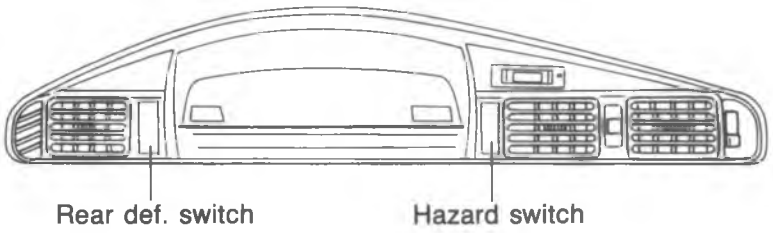

86U15X-003

MAIN FUSE BLOCK

STRUCTURAL VIEW

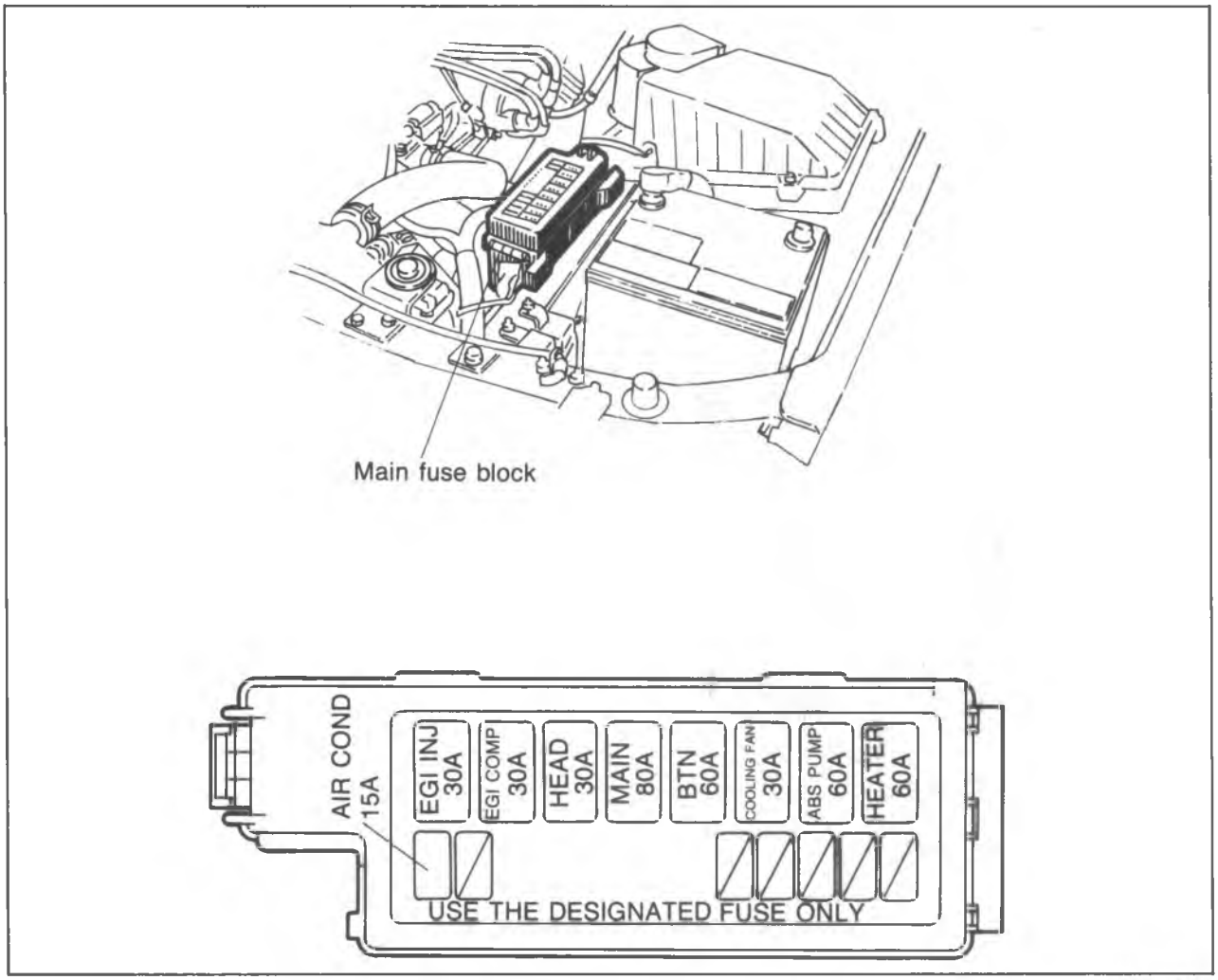

86U15X-004

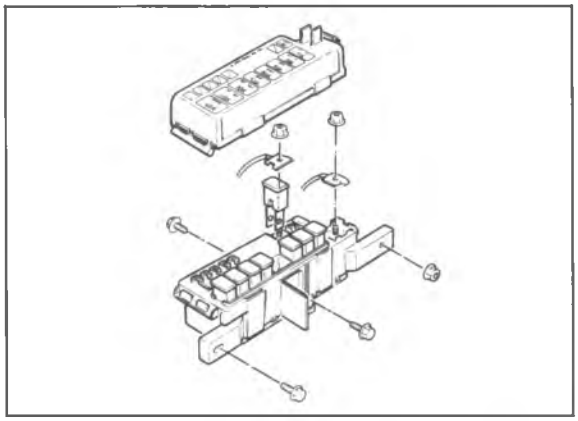

76U15X-015

REPLACEMENT

Disconnect the negative battery terminal. 30 and 60A fuses: pull out and push in a new fuse.

80A fuse:

1. Remove the main fuse box.
2. Open the cover.
3. Remove the terminal.
4. Pull out and push in a new fuse.

JOINT BOX AND FUSE

STRUCTURAL VIEW

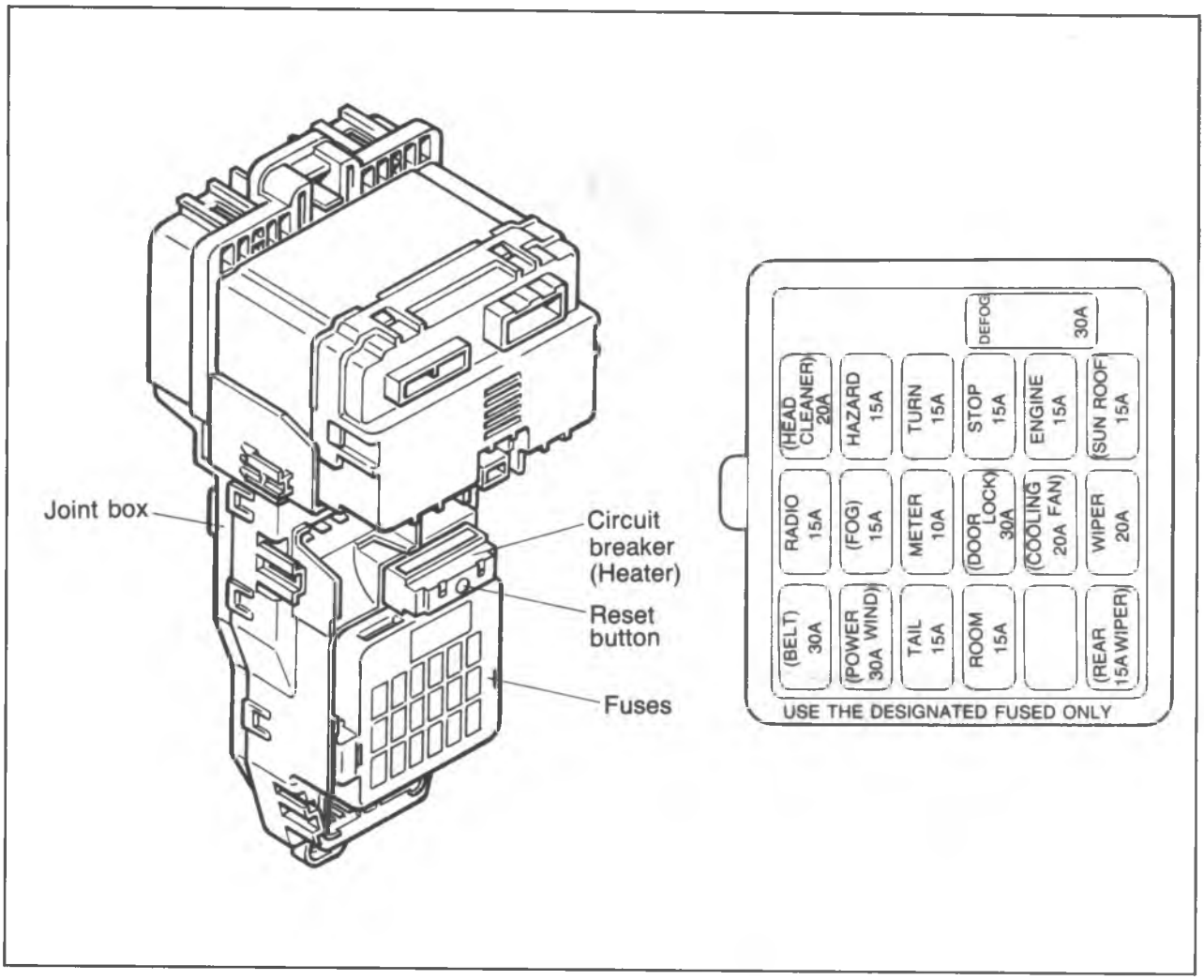

86U15X-006

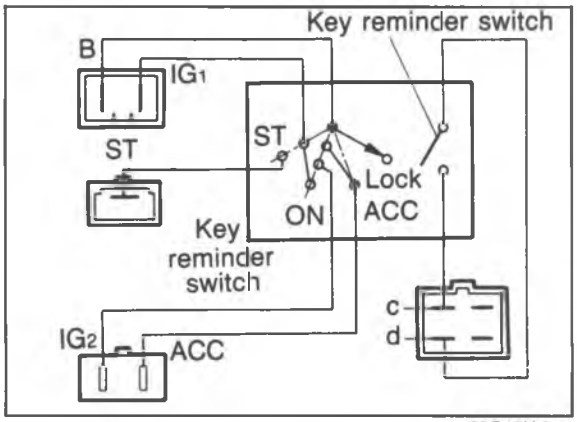

69G15X-014

IGNITION SWITCH

INSPECTION

1. Use an ohmmeter to check continuity of the terminals of the switch.
2. If continuity is not as specified, replace the switch.

Position \ Terminal		B	ACC	IG2	IG1	ST	c	d
LOCK	Remove							
	Insert						O—O	
ACC		O—O					O—O	
ON		O—O		O—O			O—O	
ST		O—			O—	—O	O—O	

O—O: Indicates continuity

COMBINATION SWITCH

STRUCTURAL VIEW

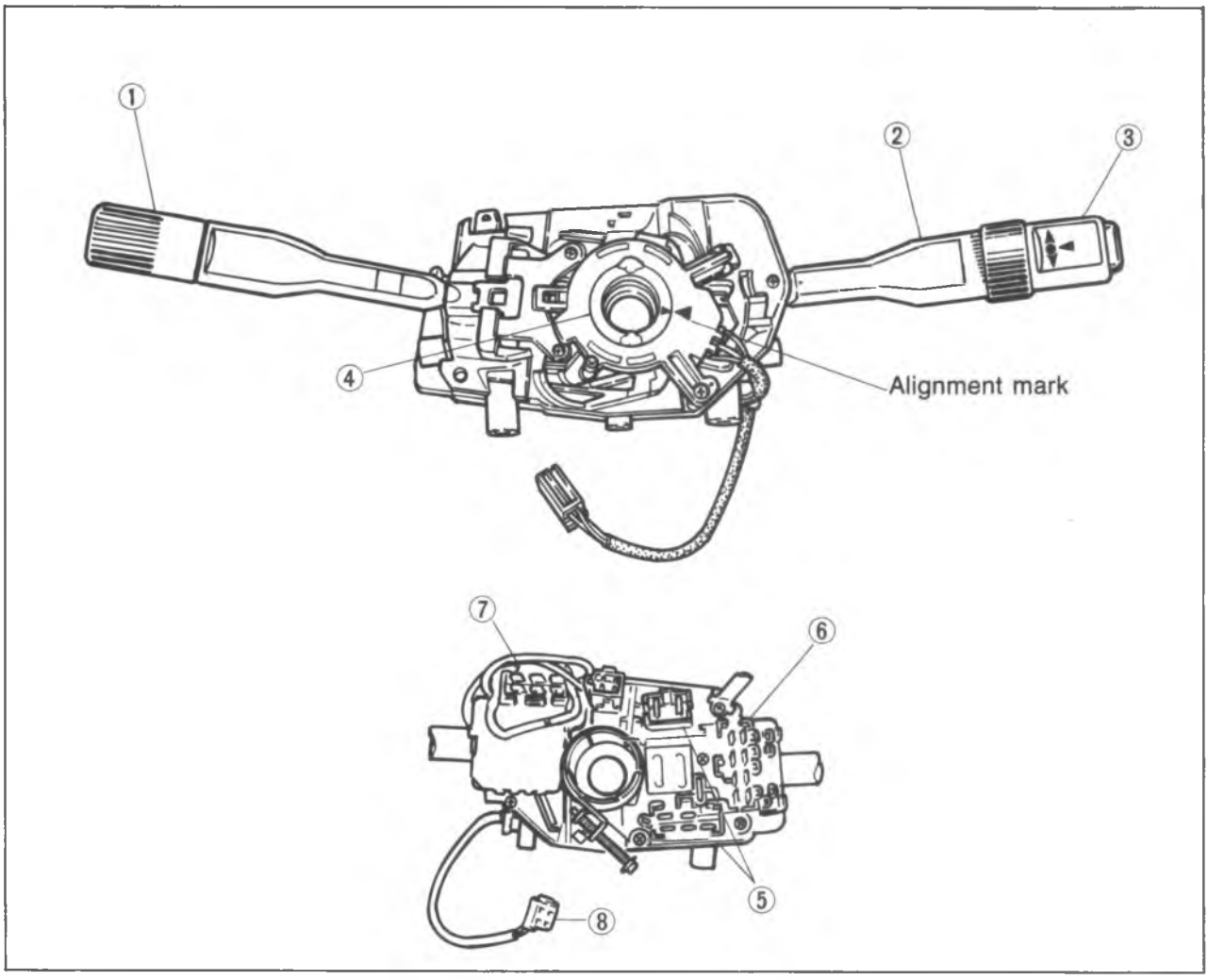

86U15X-007

1. Light and turn signal switch lever
2. Windshield wiper and washer switch lever
3. Cruise control switch
4. Steering angle sensor
5. Light switch connectors
6. Turn signal switch connector
7. Windshield wiper and washer switch connector
8. Steering angle sensor connector

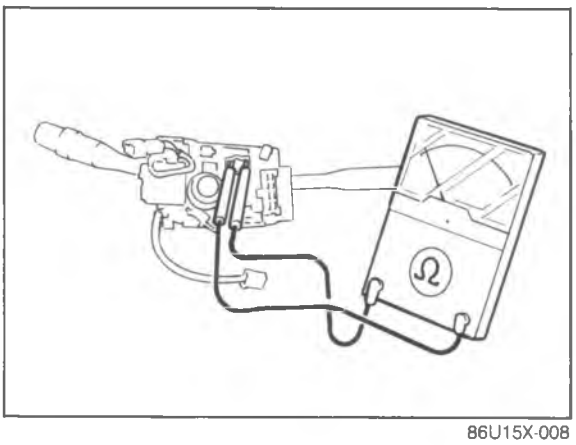

86U15X-008

INSPECTION

1. Check for continuity or the resistance between the terminals in each position with an ohmmeter.
2. If the continuity or resistance is not as specified, replace the switch.

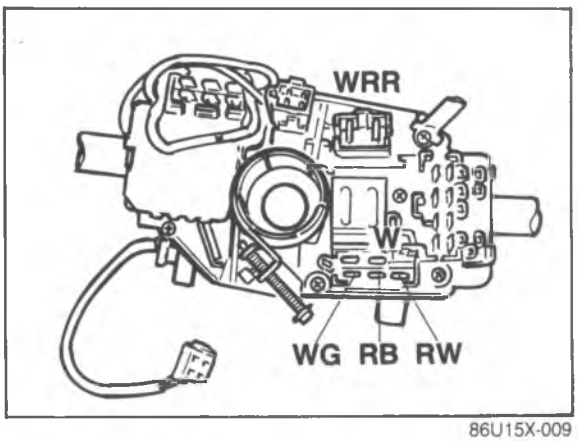

86U15X-009

Light, dimmer, and passing switch

Position \ Terminal		W	RB	RW	R	WR	WG
Headlight	Low beam	○—○				○—○	
		○			○		
	High beam	○		○		○—○	
		○			○		
Passing				○—○			
Tail, parking						○—○	

○——○: indicates continuity

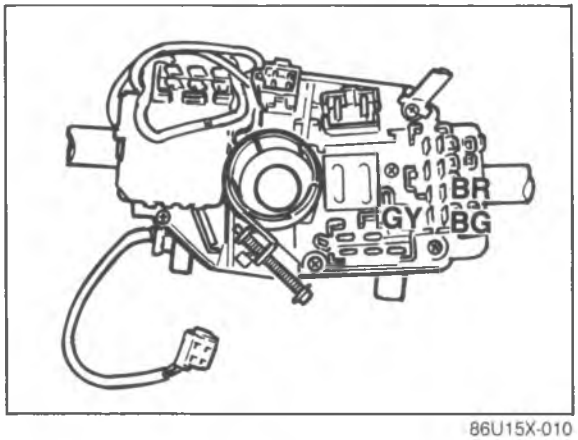

86U15X-010

Turn signal switch

Position \ Terminal	BG	GY	BR
Left	○——○		
Right	○		○

○——○: indicates continuity

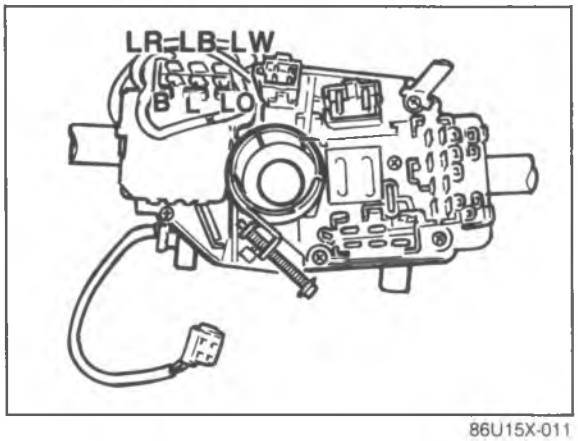

86U15X-011

Windshield wiper and washer switch

Position \ Terminal		one touch	LB	L	LW	LR	B	LO
Wiper switch	OFF	OFF	○——○					
		ON			○——○			
	INT				○——○			
	I (Low)				○——○			
	II (High)					○—○		
Washer switch ON							○—○	

○——○: indicates continuity

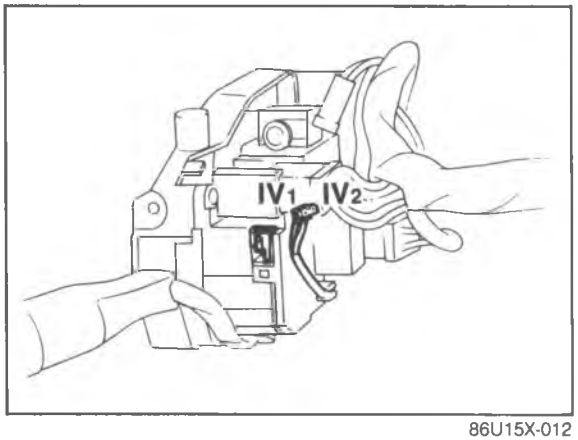

86U15X-012

Variable speed intermittent wiper timer control resistance

Position \ Terminal	IV1 — IV2
Slow	0 — 1 kΩ
Fast	40 — 60 kΩ

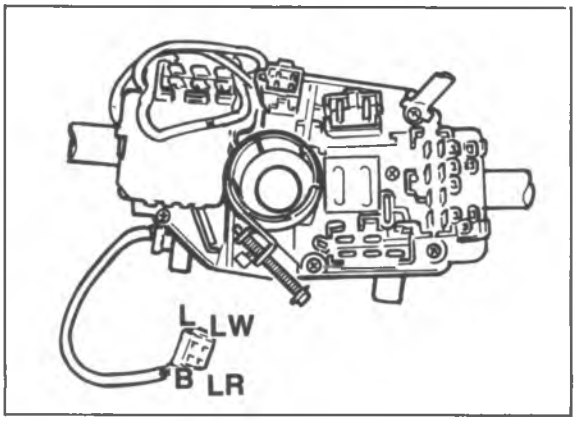

86U15X-013

Cruise control switch

Position \ Terminal	LR	L	LW	B
OFF				
SET	○	——	——	○
Resume		○	——	○
Coast			○	○

○——○: indicates continuity

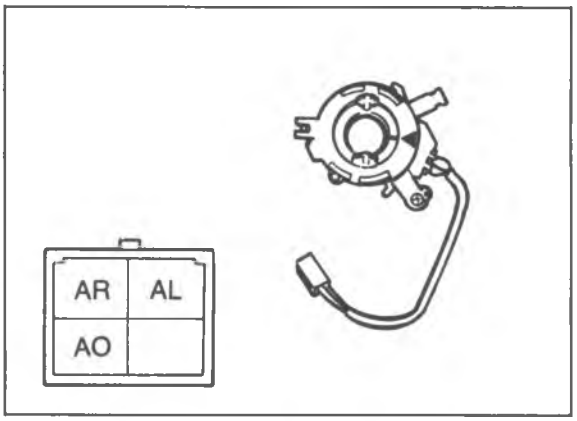

86U15X-014

Steering angle sensor

Terminal	Steering wheel position	Resistance value
AO to AR	Turn the wheel a little at a time from the straight-ahead position 180° to the right.	Decreases from about 25 kΩ to about 200 Ω.
AO to AR	Straight-ahead position	About 25 kΩ
AO to AR	Turn the wheel a little at a time from the straight-ahead position 180° to the left.	Increases from about 25 kΩ to about 50 kΩ.
AL to AR	Straight-ahead position	About 50 kΩ

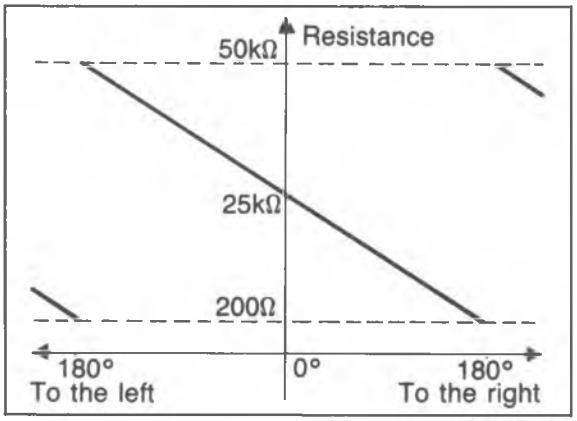

86U15X-015

Note
When the steering wheel is turned more than the specified angle in the above test, the resistance value will become as shown in the table below.

Terminal	Steering wheel position	Resistance value
AO to AR	When turned 180° or more to the right from the straight-ahead position.	Resistance slowly and gradually decreases after there is once an indication of about 50 kΩ.
AO to AR	When turned 180° or more to the left from the straight-ahead position.	Resistance slowly and gradually increases after there is once an indication of about 200 Ω.

CLUSTER SWITCH

STRUCTURAL VIEW

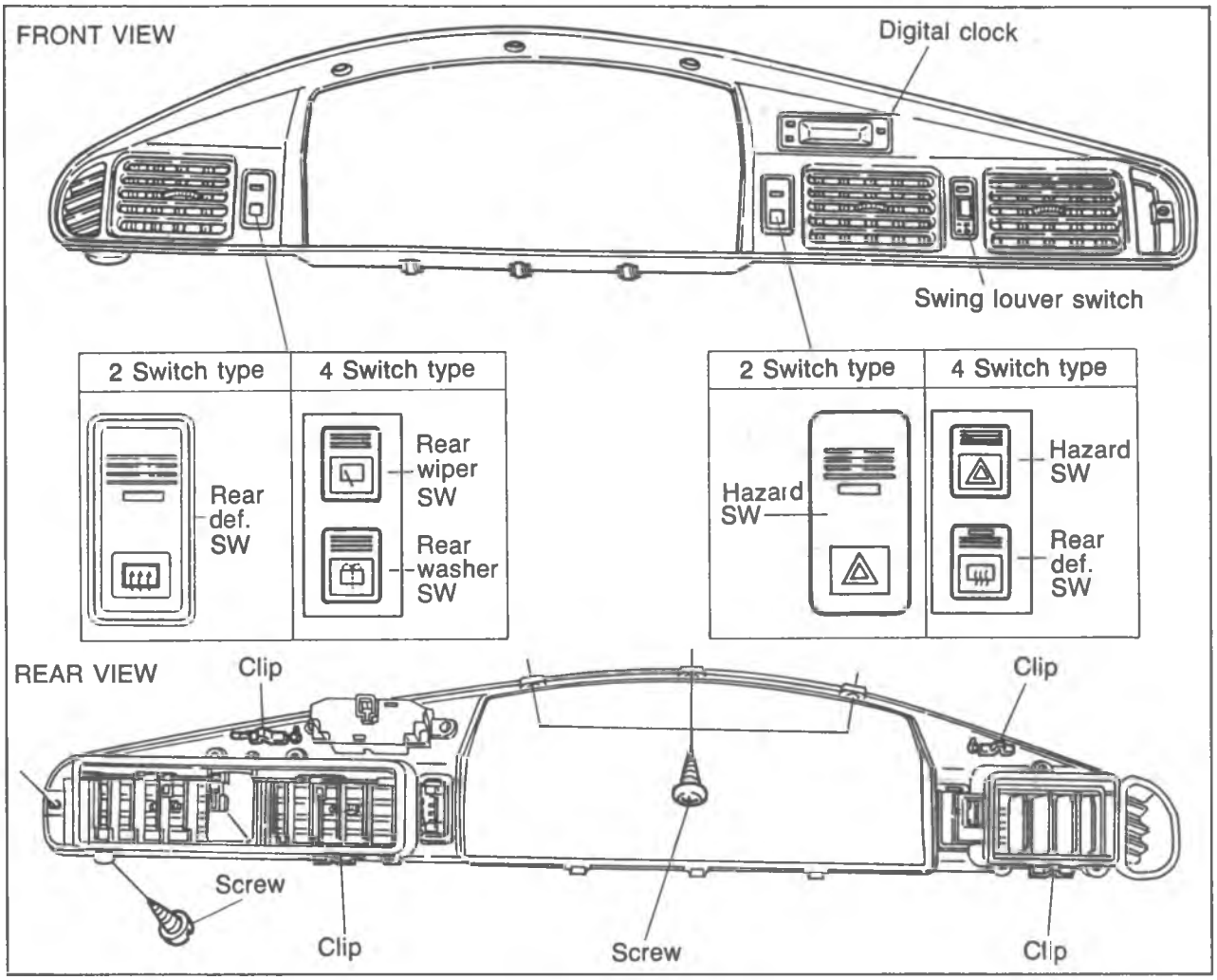

86U15X-016

Type	Switch	Switch Type	Applied model		
			MX-6	Sedan	Touring Sedan
Two switch type	Rear window defroster switch	Rocker	*	*	—
	Hazard switch	Rocker	*	*	—
Four switch type	Rear wiper switch	Push	—	—	*
	Rear washer switch	Push	—	—	*
	Hazard switch	Push	—	—	*
	Rear window defroster switch	Push	—	—	*

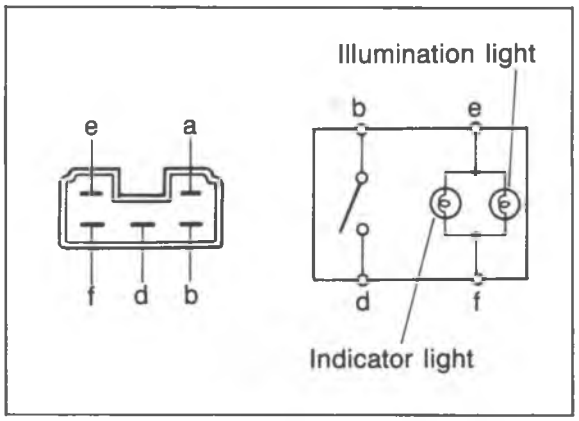

86U15X-017

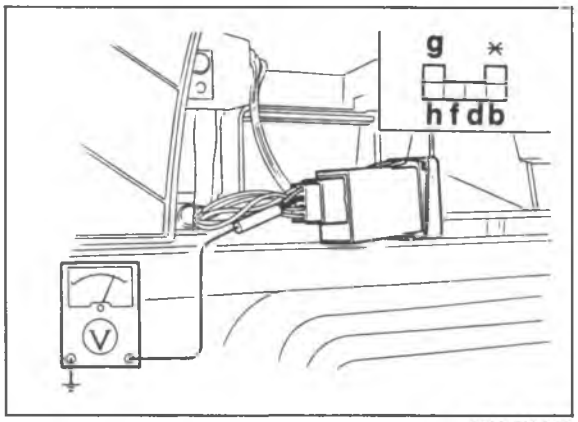

86U15X-018

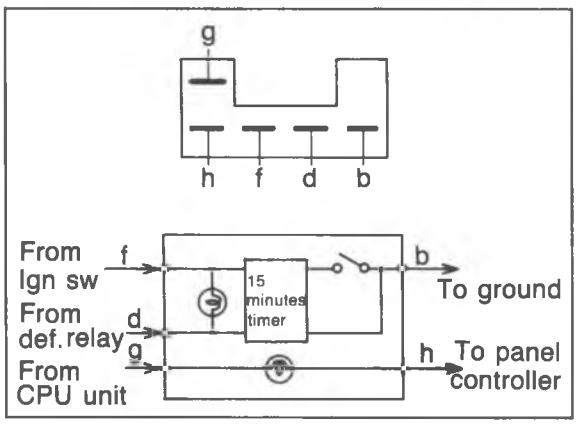

86U15X-019

INSPECTION OF TWO SWITCH TYPE

Hazard switch

1. Check for continuity between the terminals in each position with an ohmmeter.

Position \ Terminal	a	b	d	e	f
OFF				○—○	
ON		○—○		○—○	

○——○: Indicates continuity

2. If continuity is not as specified, replace the switch or replace the light(s).

Defroster switch

1. Turn the ignition switch ON.
2. Push the defroster switch to ON, and check the lights for lighting.
3. If the lights do not light, replace the lights.
4. Check that the switch goes off after 15 min from switch ON.
5. Check the voltage between each terminal and a body ground.

Position	Terminal voltage (V)				
	b	d	f	g	h
OFF	0	12	12	0	12
ON	0	0	12	0	12
ON (head light switch ON)	0	0	12	2-12	12
OFF (head light switch ON)	0	12	12	2-12	12

6. If the voltage of "d" terminal is 12V with switch off but not 0V with switch on, replace the defroster switch.
   If the voltage of "d" terminal is not 12V with switch off, trouble is in defroster relay or harness.
   If the voltages of the other terminals are not correct, trouble is in the other parts or harness.

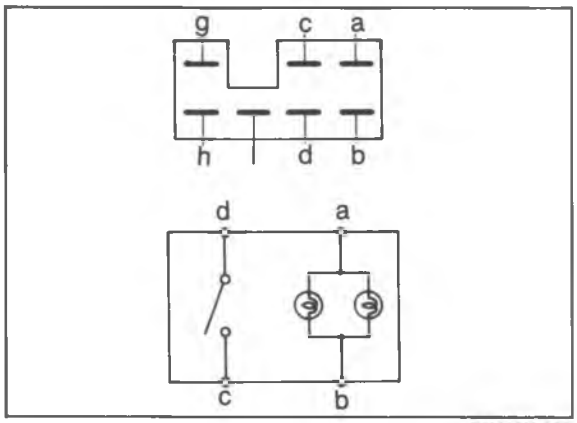

86U15X-020

INSPECTION OF FOUR SWITCH TYPE

Hazard switch

1. Check for continuity between terminals of the switch.

Position \ Terminal	a	b	c	d
OFF	○—○			
ON	○—○		○—○	

○—○: Indicates continuity

2. If continuity is not as specified, replace the switch.

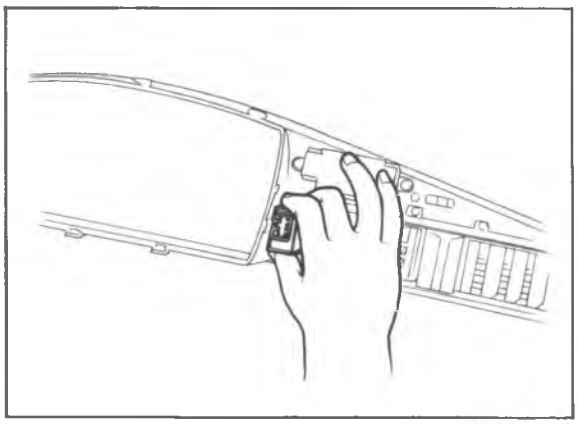
86U15X-021

Defroster switch

1. Turn the ignition switch ON.
2. Check the light for lighting.
3. If the light doesn't light, replace the light.
4. Check that the switch goes off after 15 min from switch on.
5. Check the voltage between each terminal and a body ground.

Position	Terminal voltage (V)		
	f	g	h
OFF	12	12	0
ON	12	0	0

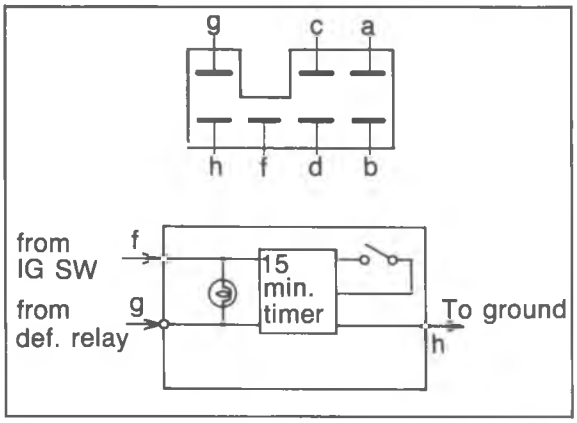

86U15X-022

6. If the voltage of terminal "g" is 12V with switch off but not 0V with switch on, replace the defroster switch
   If the voltage of terminal "g" is not 12V with switch off, trouble is in defroster relay or harness.
   If the voltage of terminal "f" and "h" is not correct, the trouble is in the other parts or harness.

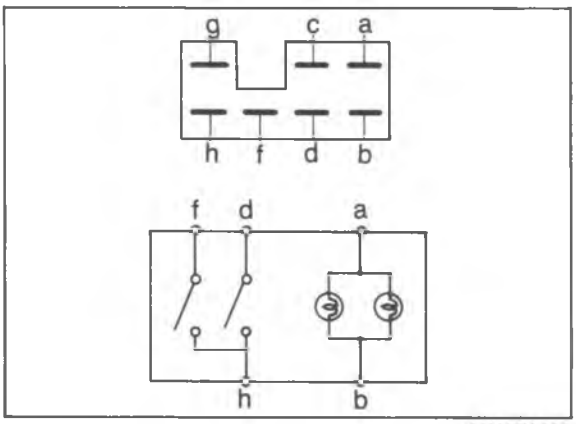

86U15X-023

Rear wiper and washer switch

1. Check for continuity between the terminals in each position with an ohmmeter.

Position \ Terminal		a	b	d	f	h
Rear wiper switch	OFF	○—○				
	ON	○—○		○—	——	—○
Rear washer switch	OFF	○—○				
	ON	○—○			○—	—○

○—○: Indicates continuity

2. If continuity is not as specified, replace the switch.

METER

STRUCTURAL VIEW

ANALOG DISPLAY METER

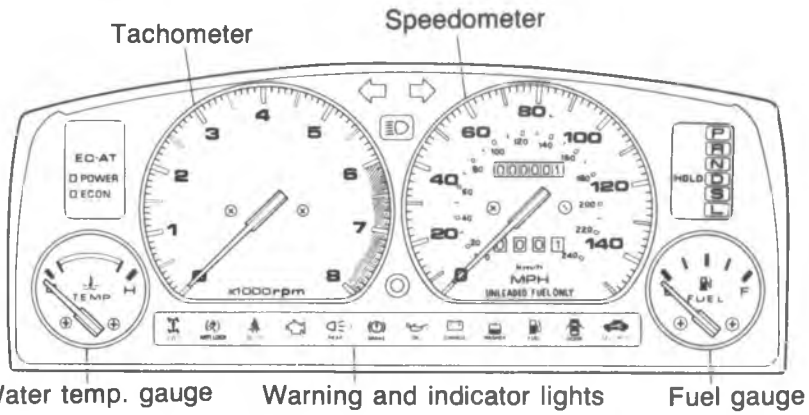

DIGITAL ELECTRONIC DISPLAY METER

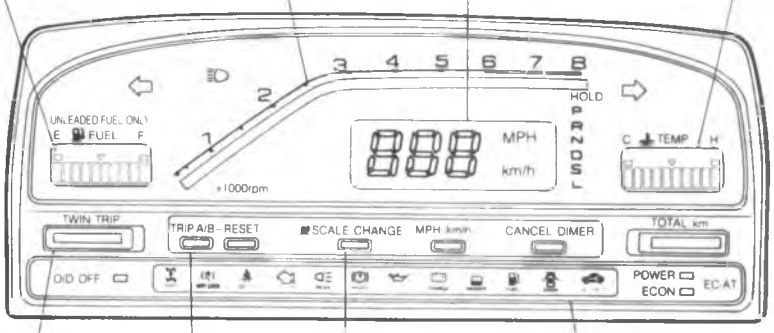

86U15X-024

DISASSEMBLY AND ASSEMBLY

ANALOG DISPLAY METER

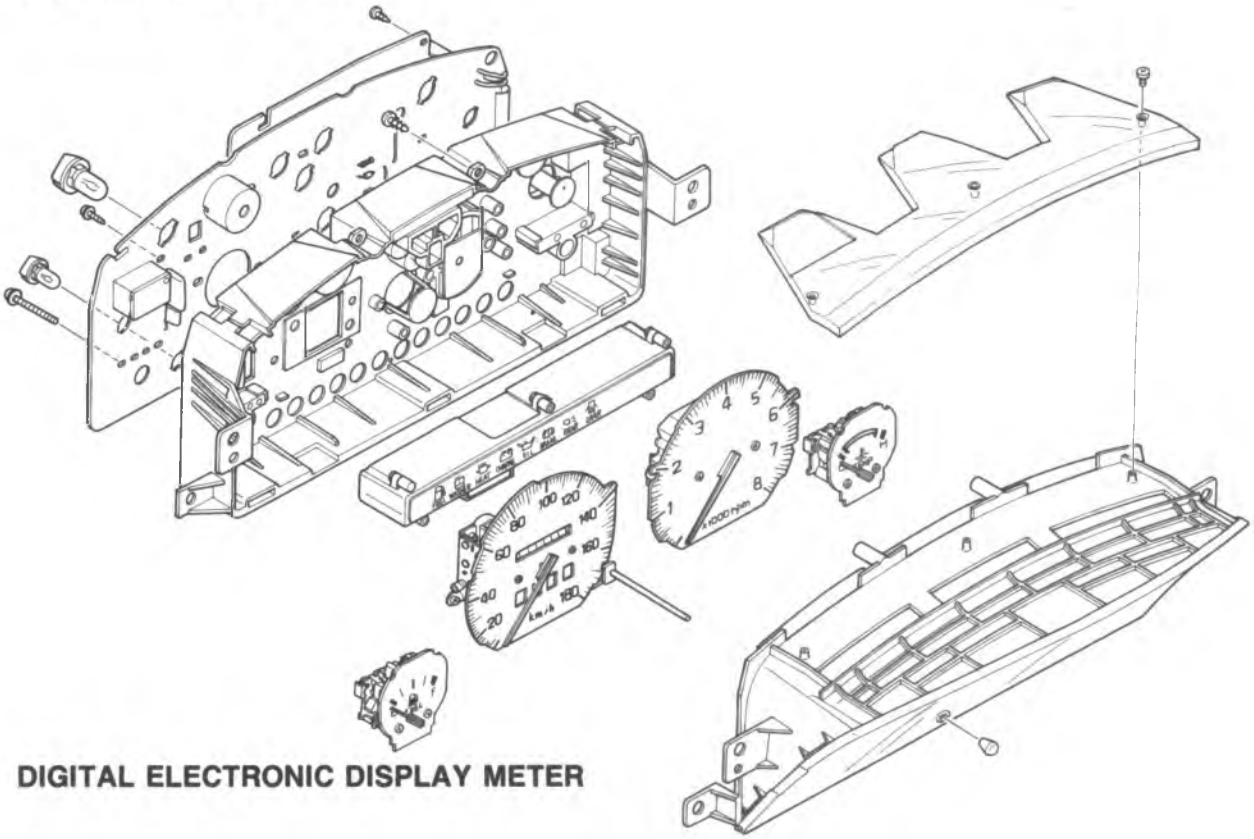

DIGITAL ELECTRONIC DISPLAY METER

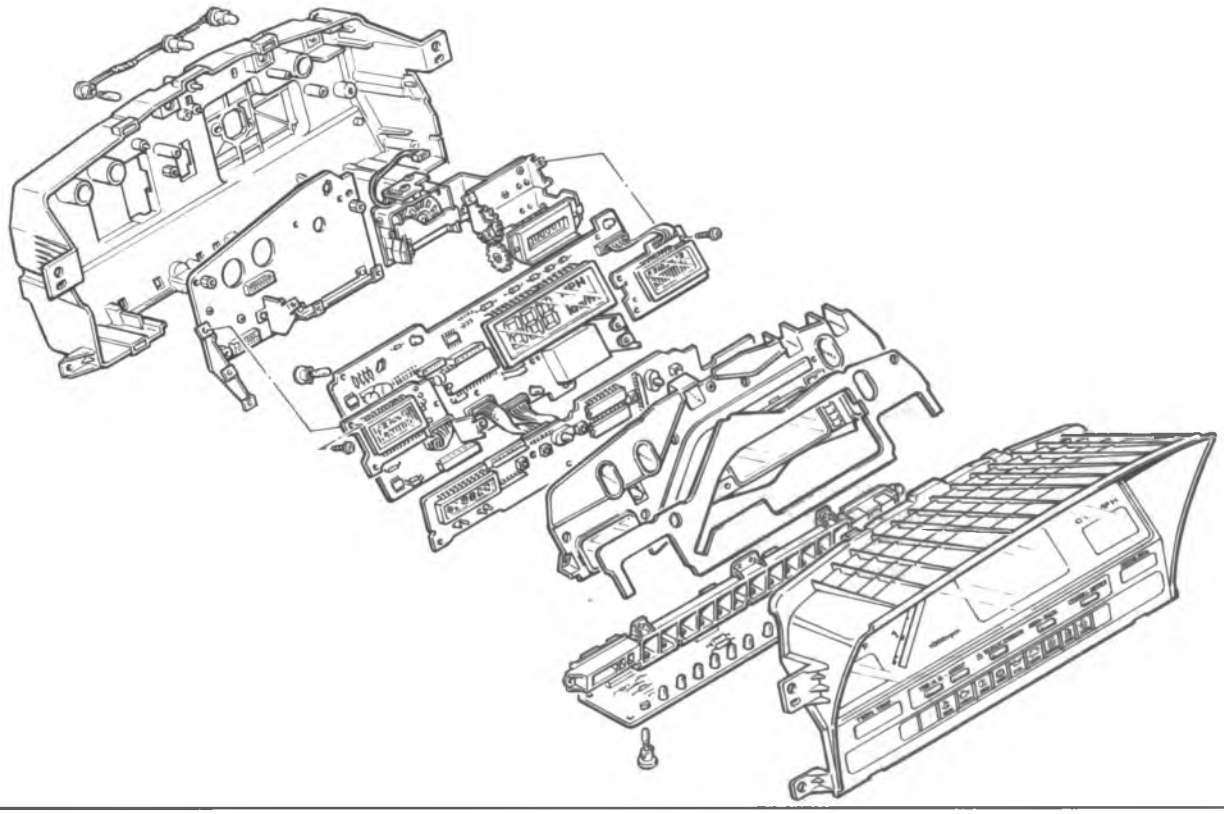

86U15X-025

TROUBLESHOOTING

Note
Check the METER 10A fuse in the fuse box for fusing before troubleshooting.

Fuel gauge does not operate when ignition switch ON.

Turn the ignition switch on, and check that some warning lights illuminate.
- NG → Repair harness. (Fuse box to meter)
- OK ↓

Check the fuel gauge.
analog meter: refer to page 15—22
digital meter: refer to page 15—24
- OK → Check the fuel tank unit.
except 4WS model: refer to page 15—25
only 4WS model: refer to page 15—26
- NG ↓

Remove the meter assembly.
Connect 1R terminal of 22 pin connector to a battery (+) terminal, 1N and 1P terminal of 22 pin connector to a battery (–) terminal, and check the voltage at 2B (Y) terminals of 14 pin connector.

Terminal	Voltage
2B (Y)	12V

- NG → Replace the fuel gauge.
- OK ↓

Repair harness. (Meter to fuel tank unit)

86U15X-026

Water temperature gauge does not operate when ignition switch on. (after warming engine)

Turn the ignition switch on, and check that some warning lights illuminate.
- NG → Repair harness (Fuse box to Meter)
- OK ↓

Check the water temperature gauge.
analog meter: refer to page 15—23
digital meter: refer to page 15—25
- OK → Check the water thermo sensor. refer to page 15—26
- NG ↓

Remove the meter assembly.
Connect 1R terminal of 22 pin connector to a battery (+) terminal, 1N and 1P terminal of 22 pin connector to a battery (–) terminal, and check the voltage at 2D (BL) terminals of 14 pin connector.

Terminal	Voltage
2D (BL)	12V

- NG → Replace the water temperature gauge.
- OK ↓

Repair the wiring harness. (Meter to water thermo sensor)

86U15X-027

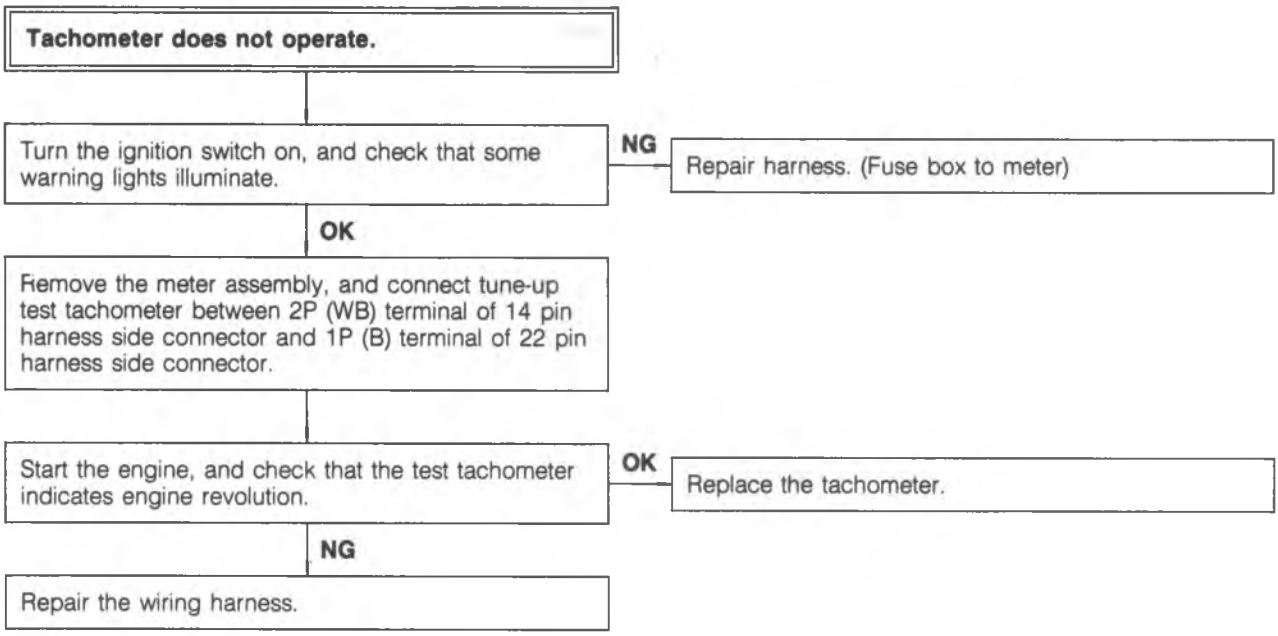
Tachometer does not operate.
Turn the ignition switch on, and check that some warning lights illuminate.
NG
Repair harness. (Fuse box to meter)
OK
Remove the meter assembly, and connect tune-up test tachometer between 2P (WB) terminal of 14 pin harness side connector and 1P (B) terminal of 22 pin harness side connector.
Start the engine, and check that the test tachometer indicates engine revolution.
OK
Replace the tachometer.
NG
Repair the wiring harness.

86U15X-028

Standard indication (km/h)	Allowable range (km/h)
40	40— 43
80	80— 84
120	120—126

Standard indication (mph)	Allowable range (mph)
30	30—32
50	50—53
80	80—84

86U15X-029

Standard Indication (rpm)	Allowable range (rpm)
1000	850—1090
2000	1910—2210
3000	2850—3330
4000	3820—4420
5000	4790—5510
6000	5760—6600

86U15X-030

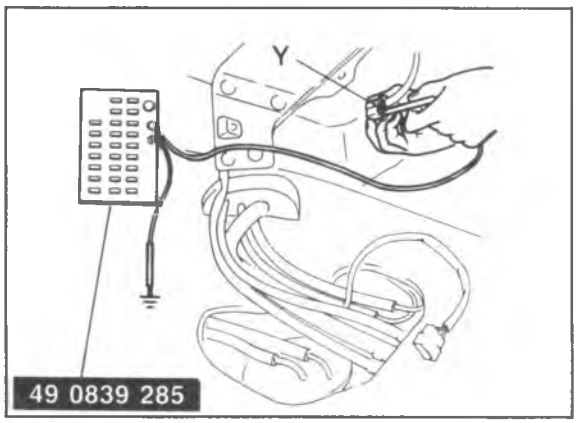

86U15X-031

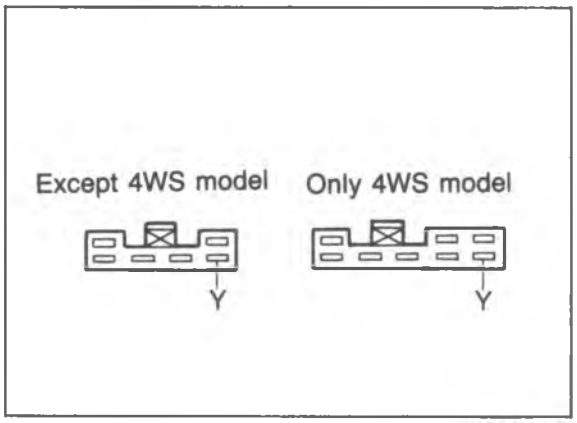

86U15X-032

INSPECTION OF ANALOG METER

Speedometer

1. Using a speedometer tester, check the speedometer for allowable indication error, and check the operation of the odometer. Replace if necessary.
2. Check the speedometer for fluctuation and/or abnormal noise.

Caution

a) If significant fluctuation occurs or the speedometer does not move at all, remove the speedometer cable. If normal, replace the speedometer assembly.

b) Tire wear and improper inflation will increase speedometer error.

Tachometer

1. Connect a test tachometer to the engine, and start the engine.
2. Check the tachometer for allowable indicator error. Replace if necessary.

Caution

When removing or installing the tachometer, be careful not to drop it.

Fuel Gauge

1. Disconnect the connector from the fuel tank unit.

2. Connect the red lead of the **SST** to the terminal **"Y"**, and the black lead to a body ground.

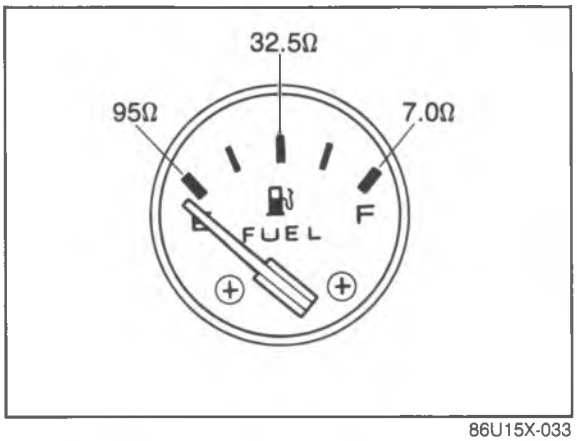

86U15X-033

3. Set the **SST** to the resistance values shown in the figure.
4. Turn the ignition switch ON, and check that the needle indicator displays the correct values.
   If the needle displays correctly, check the gauge unit. If not, replace the fuel gauge in the meter or repair the wiring harness.

Caution
a) Continue the above checks for at least two minutes each to correctly judge the condition.
b) The allowable indication error is twice the width of the needle.

Water Temperature Gauge
1. Disconnect the connector from the water thermo sensor.
2. Connect the red lead of the **SST** to the connector, and the black lead to a body ground.

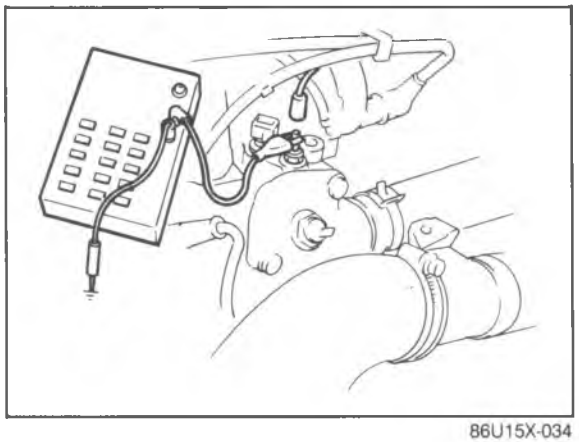

86U15X-034

3. Set the **SST** to the resistance values shown in the figure.
4. Turn the ignition switch ON, and check that the needle indicator displays the correct values.
   If the needle displays the correct values, the trouble is in the gauge unit; if not, the trouble is in the meter or the wiring harness.

Caution
a) Continue the above checks for at least two minutes each to correctly judge the condition.
b) The allowable indication error is twice the width of the needle.

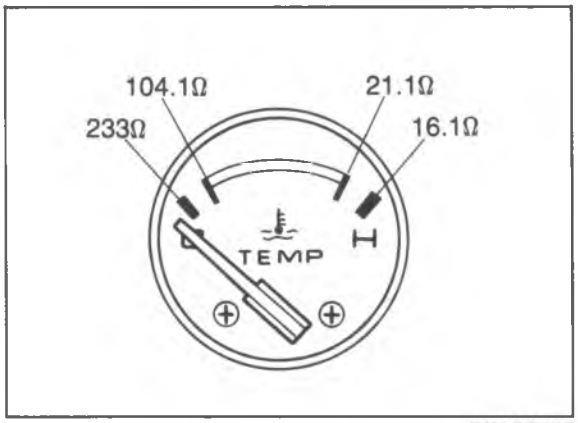

86U15X-035

Standard indication (km/h)	Allowable range (km/h)
60	60—63

Standard indication (mph)	Allowable range (mph)
60	60—63

86U15X-036

INSPECTION OF DIGITAL METER
Speedometer
1. Using a speedometer tester, check the speedometer for allowable indication error, and check the operation of the odometer. Replace the meter assembly if necessary.
2. Check the speedometer for fluctuation and/or abnormal noise.

Caution
a) If significant fluctuation occurs or the speedometer does not move at all, remove the speedometer cable. If normal, replace the digital meter assembly.
b) Tire wear and improper inflation will increase speedometer error.

Standard Indication (rpm)	Allowable range (rpm)
1000	900— 950
2000	1900—1950
3000	2900—2950
4000	3900—3950
5000	4900—4950
6000	5900—5950

86U15X-037

Tachometer

1. Connect a test tachometer to the engine, and start the engine.
2. Check the tachometer for the allowable indicator error. Replace digital meter assembly.

Caution
When removing or installing the tachometer, be careful not to drop it or subject it to sharp impact.

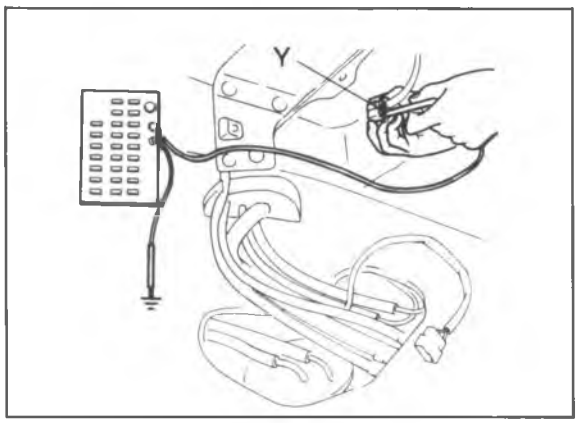

86U15X-038

Fuel Gauge

1. Disconnect the connector from the fuel tank unit.
2. Connect the red lead of the **SST** to terminal **"Y"** and the black lead to body ground.

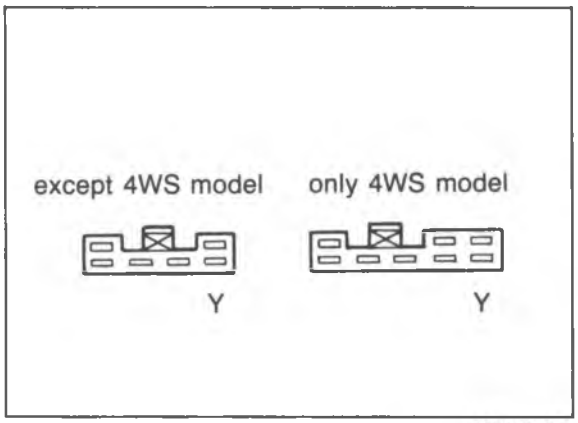

86U15X-039

3. Set the **SST** to the resistance values shown the following table.
4. Turn the ignition switch ON and check that the segment displays the correct values in each range. If the segment displays the correct values, check the gauge unit. IF not, replace the digital meter assembly.

Caution
Continue the above inspections for at least two minutes each to correctly judge the condition.

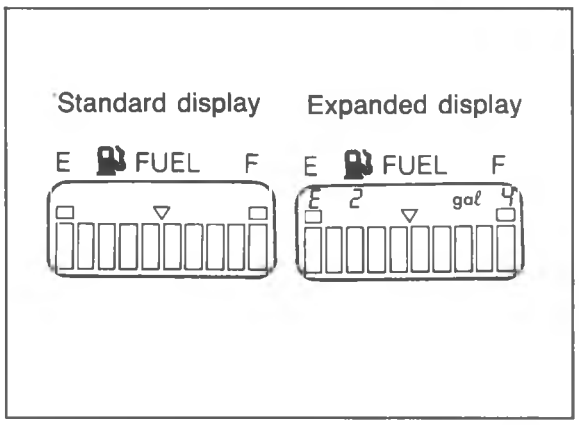

86U15X-040

Segment	Standard display	Expanded display
	Resistance (Ω)	
1—10	less than 8	less than 63
1— 9	8—14	63—66
1— 8	14—20	66—70
1— 7	20—25	70—74
1— 6	25—30	74—78
1— 5	30—37	78—82
1— 4	37—46	82—86
1— 3	46—63	86—90
1— 2	63—86	90—93
1	86—98	93—98
1 (flashing)	more than 98	less than 98

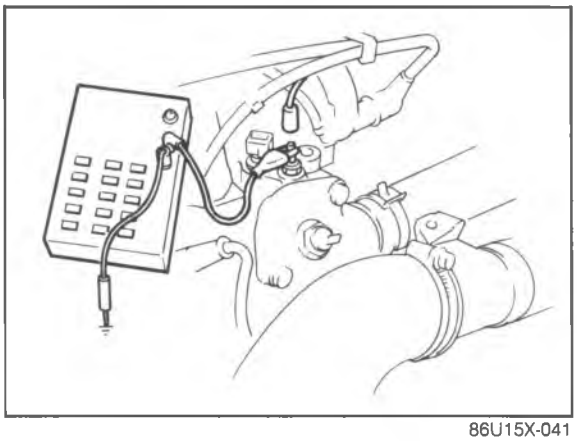

86U15X-041

Water Temperature Gauge

1. Remove the connector from the water thermo sensor.
2. Connect the red lead of the **SST** to the connector, and the black lead to a body ground.

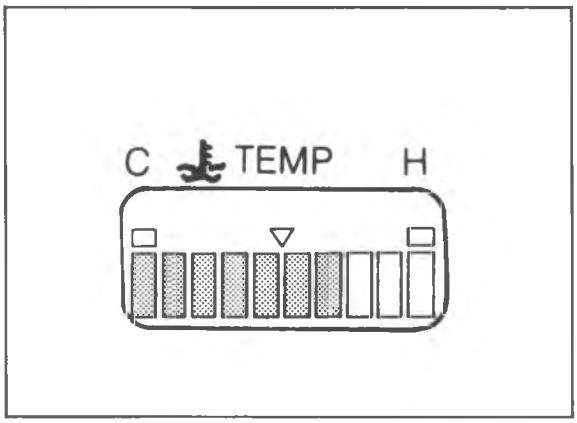

86U15X-042

3. Set the **SST** to the resistance values shown in the following table.
4. Turn the ignition switch ON and check that the segment displays the correct values. If the segment displays the correct values, check the gauge unit. If not, replace the digital meter assembly or repair wiring harness.

Caution
Continue the above checks for at least two minutes each to correctly judge the condition.

Segment	Resistance (Ω)	Segment	Resistance (Ω)
1—10	less than 17	1—5	33—89
1— 9	17—20	1—4	89—120
1— 8	20—26	1—3	120—145
1— 7	26—28	1—2	145—177
1— 6	28—33	1	more than 177

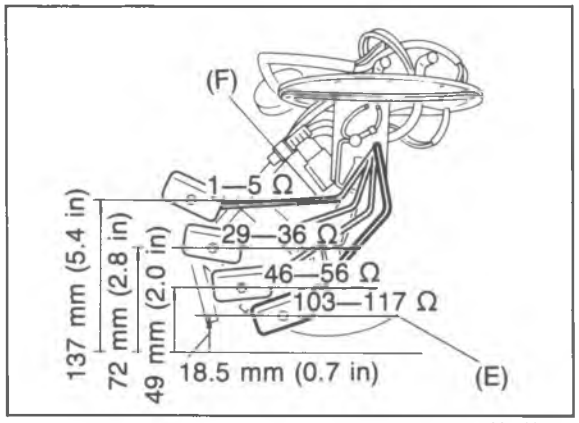

86U15X-043

INSPECTION OF METER SENDER
Fuel tank unit (except 4WS model)

1. Disconnect the connector from the fuel tank unit.
2. Remove the fuel tank unit from the tank.
3. Connect an ohmmeter to terminal "b" of connector.
4. Move the unit arm slowly from point (F) to point (E), and read the resistance values. If not as specified, replace the unit.

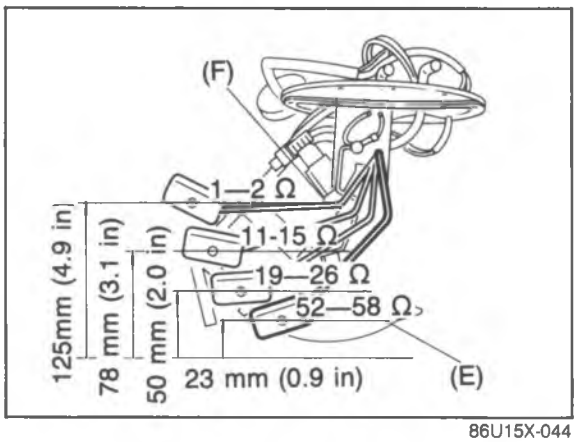

86U15X-044

Fuel transfer unit (only 4WS model)

1. Remove the fuel transfer unit referring to section 4.
2. Remove the connector from the fuel transfer unit.
3. Connect an ohmmeter between "b" and "d" terminal of the connector.
4. Move the unit arm slowly from point (F) to point (E), and read the resistance values.
5. If not as specified, replace the unit.

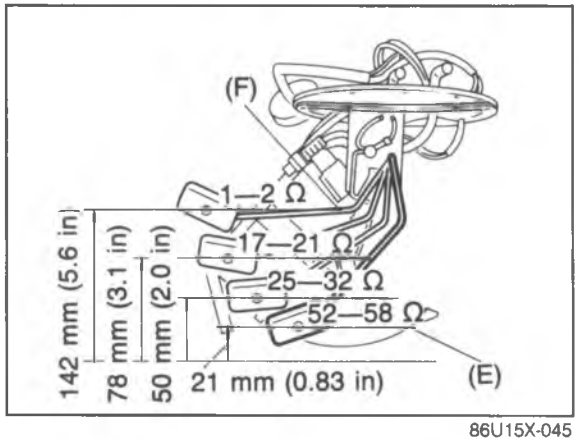

86U15X-045

Fuel tank unit (only 4WS model)

1. Remove the fuel tank unit.
2. Remove the connector from the fuel tank unit.
3. Connect an ohmmeter between "d" terminal of the connector and fuel tank unit cover.
4. Move the unit arm slowly from point (F) to point (E) and read the resistance values.
5. If not as specified, replace the unit.

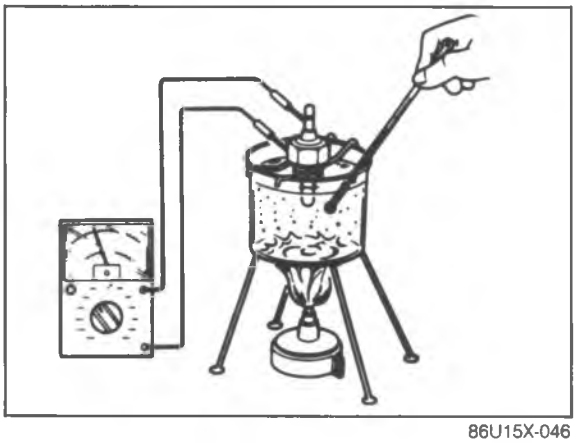

86U15X-046

Water Thermo Sensor

1. Remove the sensor.
2. Place the sensor in water along with a thermometer.
3. Heat the water gradually, and check the resistance of the sensor with an ohmmeter.

WARNING LIGHT AND SENDER

CIRCUIT DIAGRAM

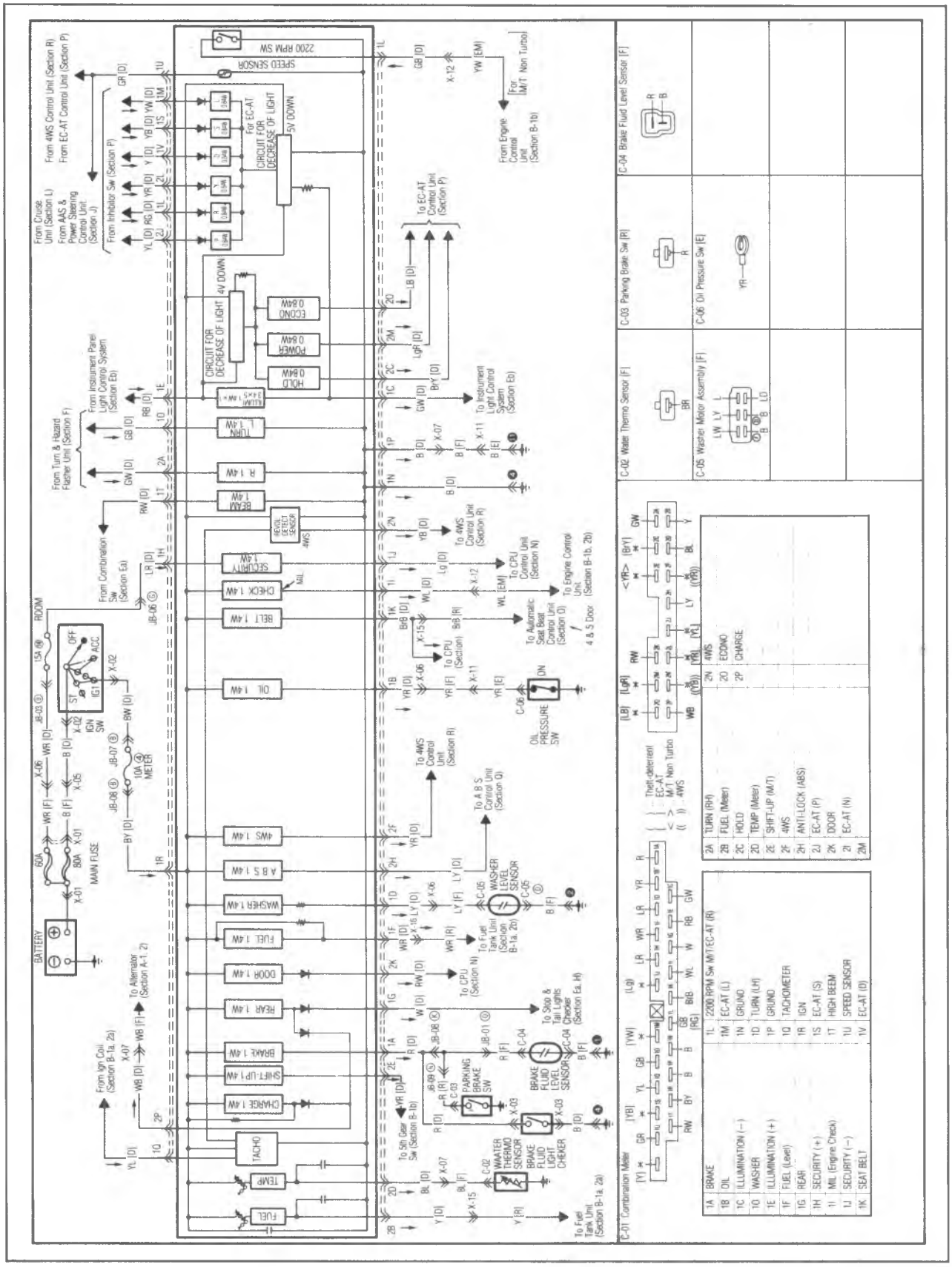

86U15X-047

TROUBLESHOOTING

Note
Check the "Meter 10A" fuse in the fuse box before troubleshooting. If normal, refer to the following troubleshooting chart.

Brake System Warning Light

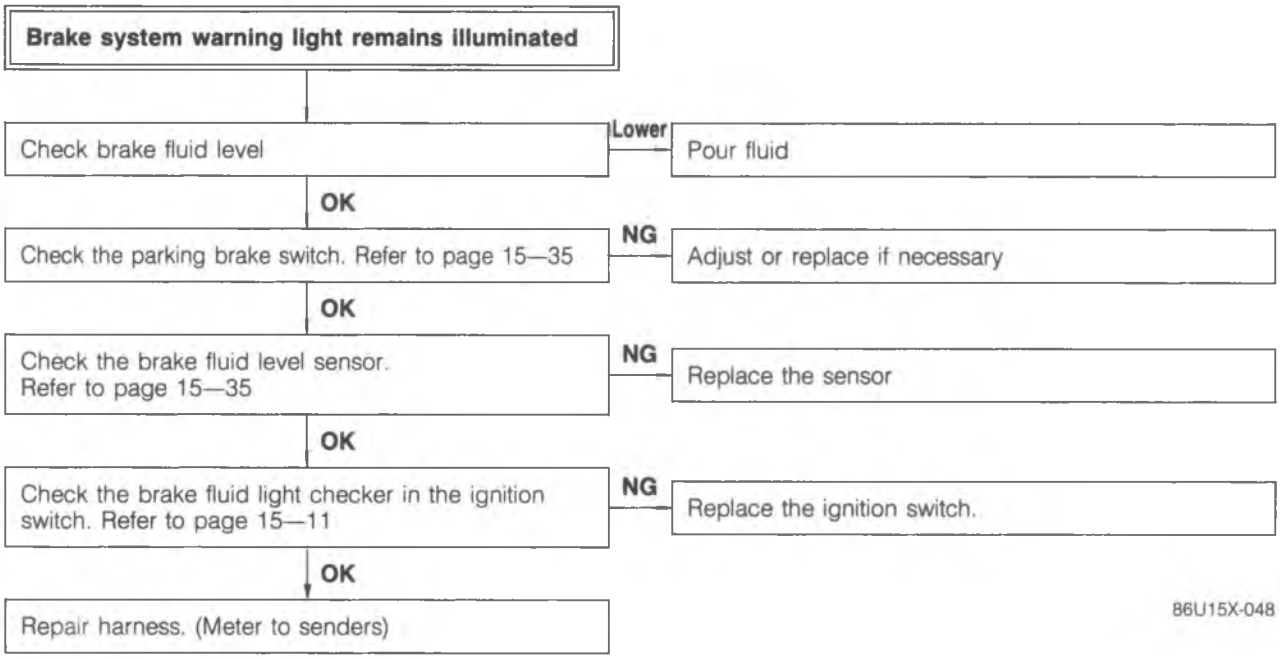

86U15X-048

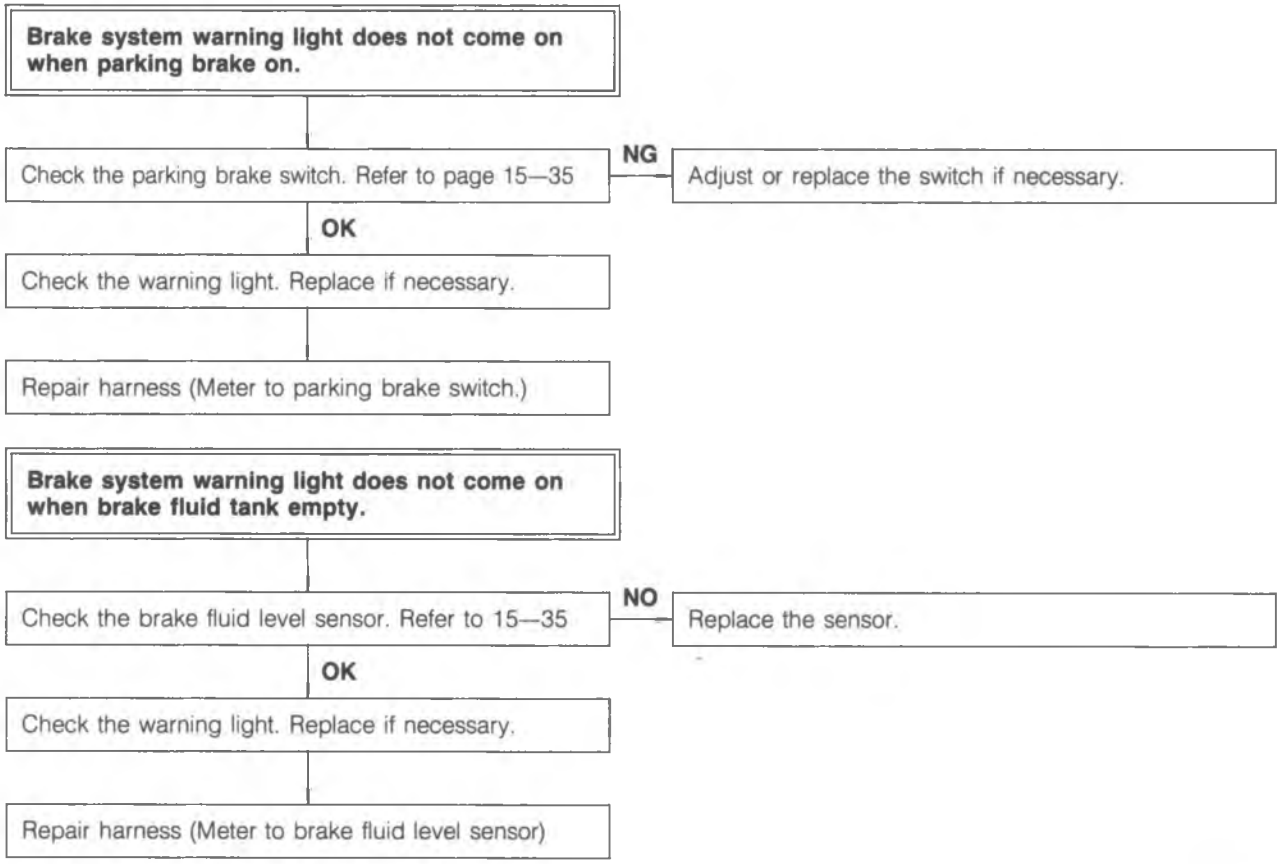

86U15X-049

Alternator Warning Light

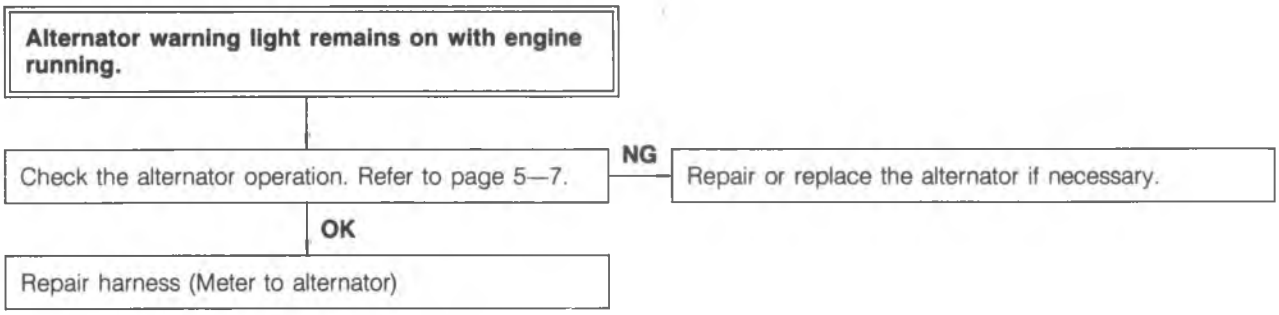

86U15X-050

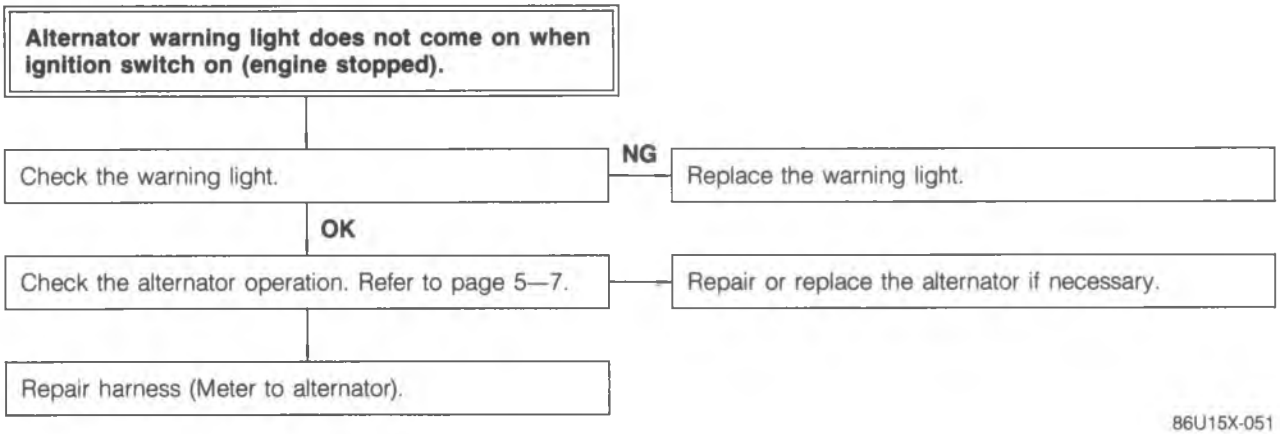

86U15X-051

Stop And Tail Light Malfunction Warning Light

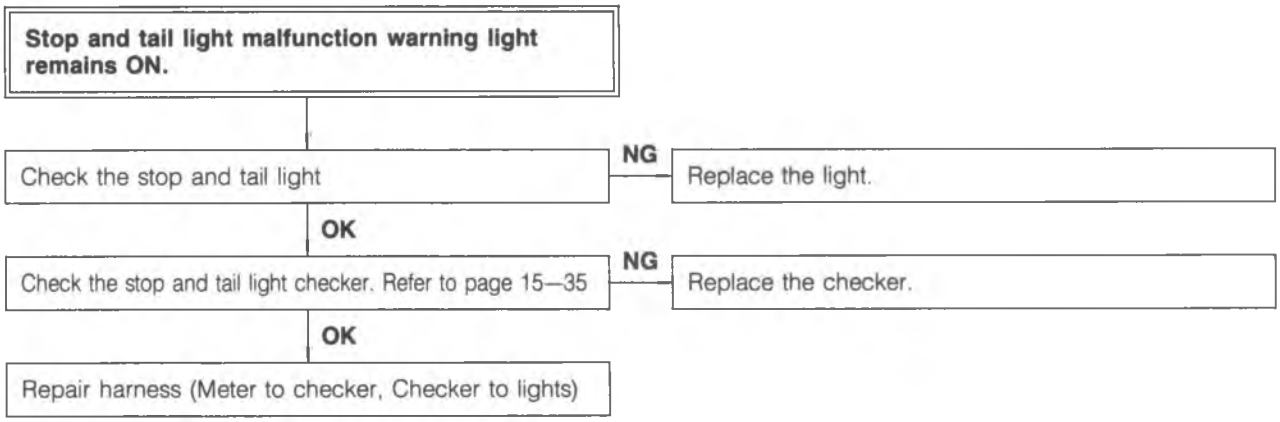

86U15X-052

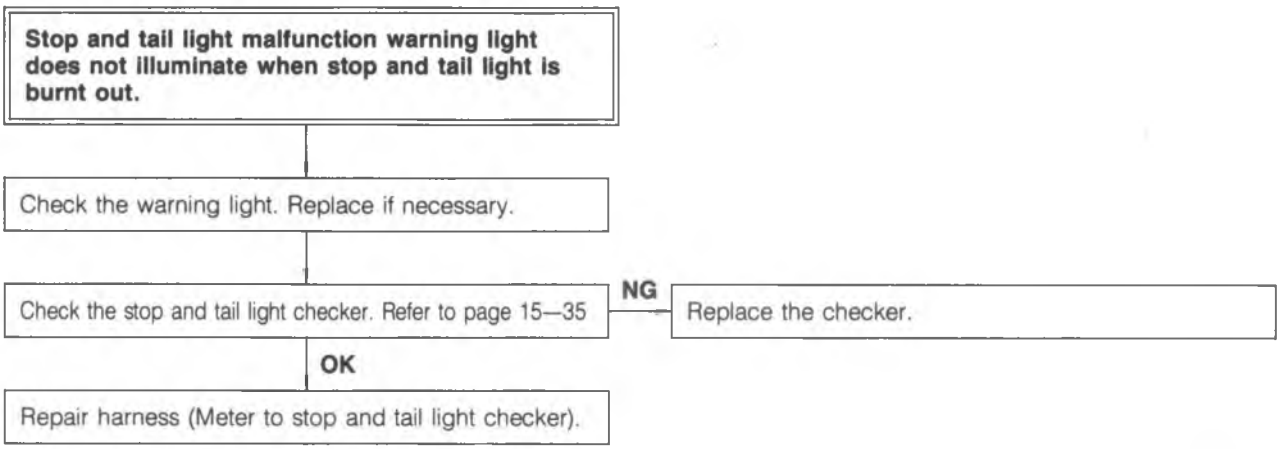

86U15X-053

Door Ajar Warning Light

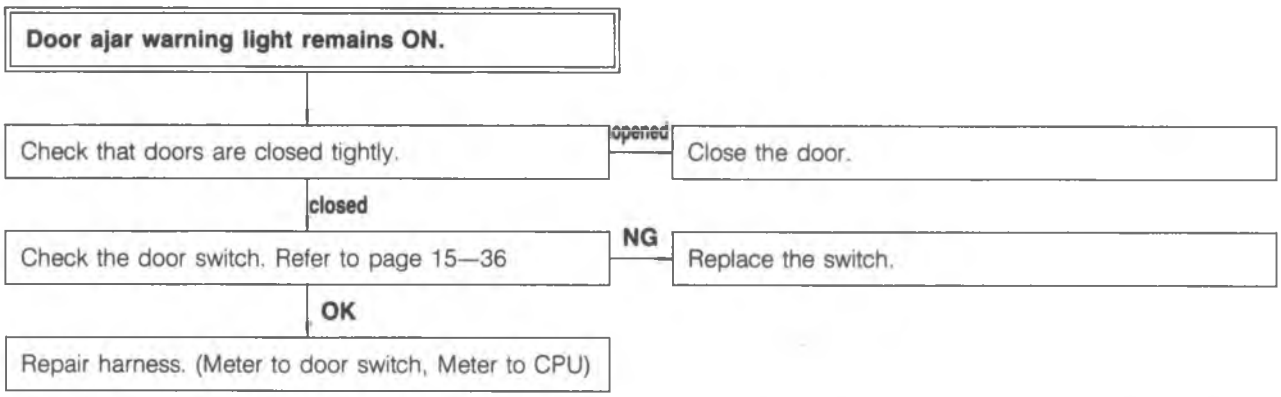

86U15X-054

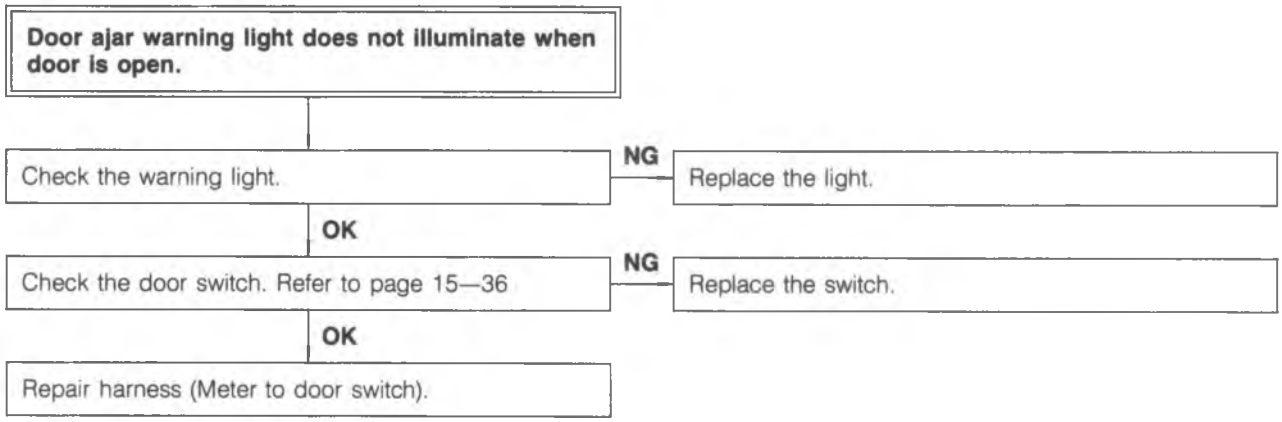

86U15X-055

Washer Fluid Low Level Warning Light

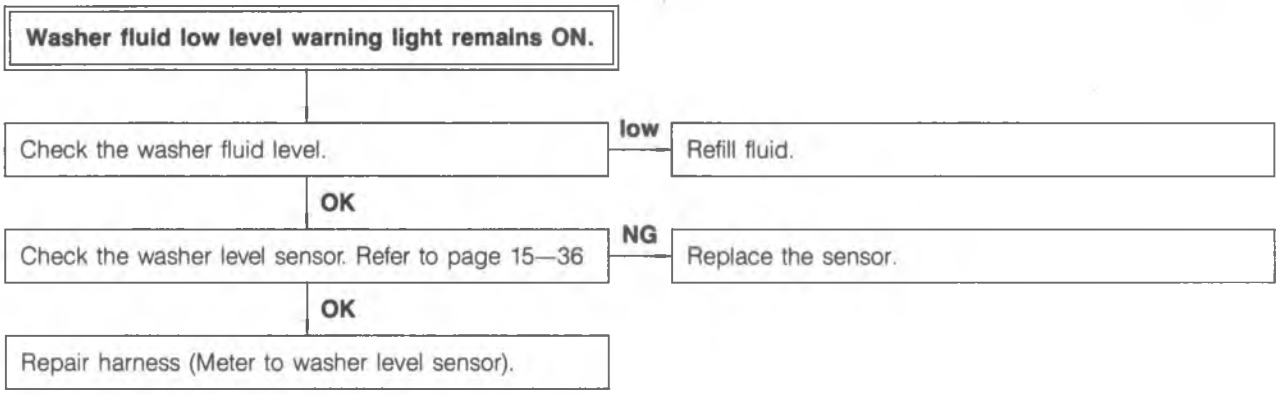

86U15X-056

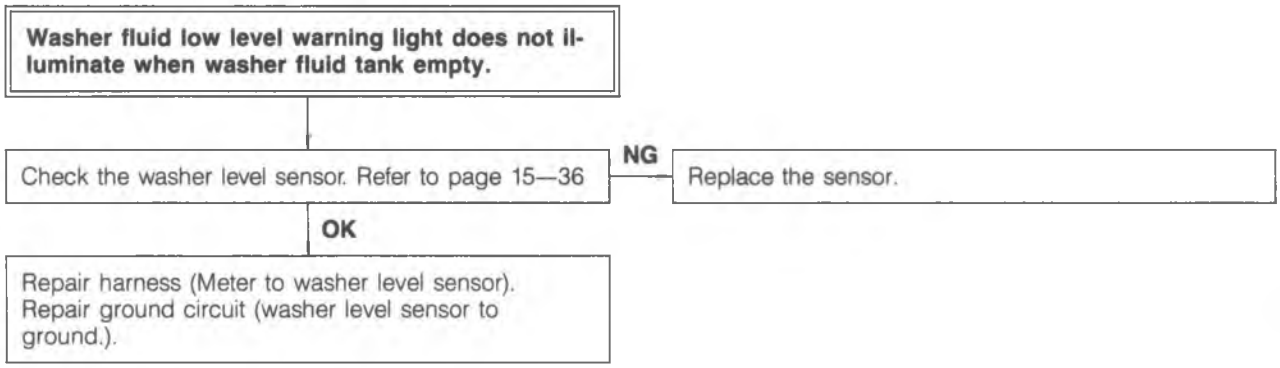

86U15X-057

Engine Oil Pressure Warning Light

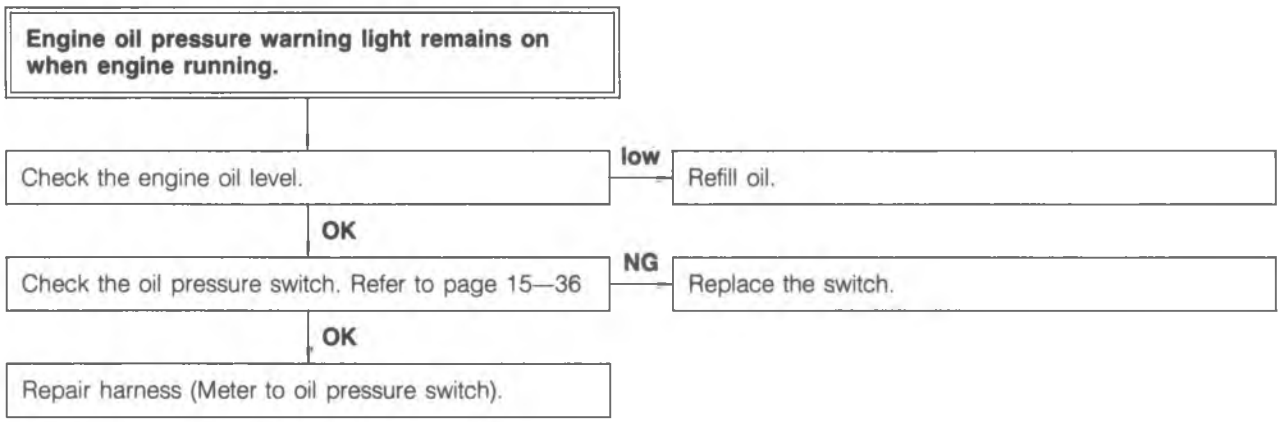

86U15X-058

Engine oil pressure warning light does not illuminate when turning the ignition switch on (engine stopped).

Check the warning light. — NG → Replace the light.

OK

Check the oil pressure switch. Refer to page 15—36 — NG → Replace the light.

OK

Repair harness (Meter to oil pressure switch).

86U15X-059

Low Fuel Level Warning Light

Low fuel level warning light remains ON. (except 4WS model)

Add fuel, and check that warming light illuminates. — does not illuminate → Normal operation.

illuminates

Remove the rear seat.
Disconnect the fuel tank unit connection, and check the warning light for illumination. — illuminates → Repair harness (Meter to fuel tank unit)

does not illuminate

Replace the fuel gauge unit

86U15X-060

Low fuel level warning light remains ON. (for 4WS model)

Add fuel, and check that warning light illuminates. — does not illuminate → Normal operation.

illuminates

Remove the rear seat.
Disconnect the main pump unit connector, and, check the warning light for illumination. — Does not illuminate → Replace the main gauge unit.

illuminates

Disconnect the transfer pump unit connector and, check the warning light for illumination. — does not illuminate → Replace the transfer gauge unit.

illuminates

Repair harness (Meter to main pump unit.)

86U15X-061

HOLD indicator lights do not illuminate when ignition switch and hold switch ON.

Check the hold switch. Refer to page 7B—41

NG → Replace the switch.

OK

Disconnect the EC-AT control unit connector and check the voltage at **BrY (2K)** terminal of the harness side connector with ignition switch on.

Terminal	Voltage
BrY (2K)	12V

NG → Replace the bulb repair the harness (Meter to control unit).

Shift Indicator Light

All shift indicator lights do not illuminate when ignition switch on. (other warning light are all right.)

Check the voltage at **BY** terminal of the inhibitor switch connector with ignition switch on.

Terminal	Voltage
BY	12V

NG → Repair the harness (Fuse box to inhibitor switch).

OK

Check the inhibitor switch. Refer to page 7B—42

NG → Replace the inhibitor switch.

OK

Check the bulbs of the shift indicator lights.

NG → Replace the bulb.

OK

Turn the ignition switch on, and check the voltage at each terminal of the meter connector with each condition.

Terminal	Selector lever	Voltage
YL (2J)	P	12V
RG (1L)	R	12V
YR (2L)	N	12V
Y (1V)	D	12V
YB (1S)	2	12V
YW (1M)	1	12V

NG → Repair the harness (Inhibitor switch to meter).

86U15X-258

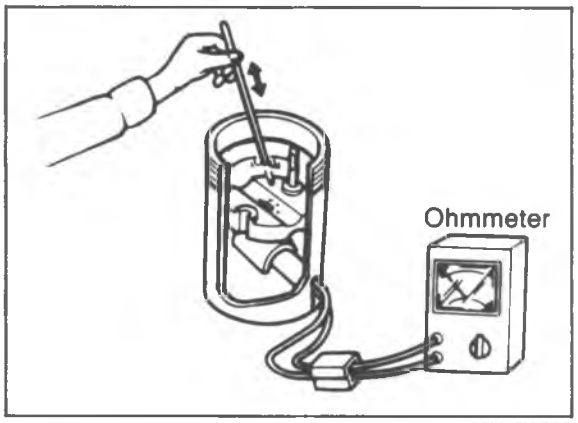

86U15X-065

INSPECTION

Brake Fluid Level Sensor

1. Check for continuity of the sensor with an ohmmeter.

Float level	Continuity
Below min	Yes
Above min	No

2. If continuity is not as specified, replace the sensor.

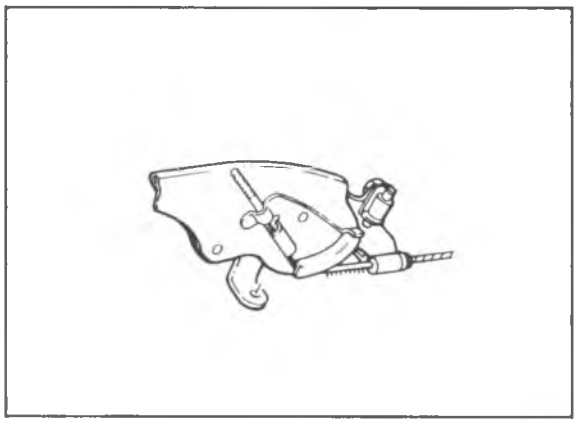

86U14X-066

Parking Brake Switch

1. Check for continuity between (R) terminal and a body ground with an ohmmeter.

Lever	Continuity
Pulled one notch	Yes
Released	No

2. If continuity is not as specified, adjust the switch or replace the switch.

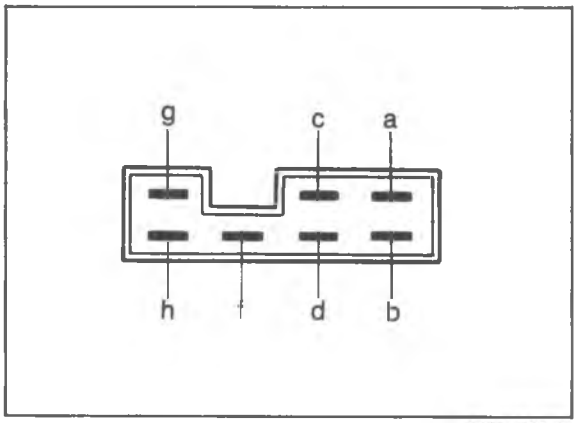

86U15X-067

Stop and Tail Light Checker

1. Check for continuity between the terminals of the stop and tail light checker.

Terminal + –	Continuity	Terminal + –	Continuity	Terminal + –	Continuity
a-b	○	c-d	X	f-g	X
a-c	○	c-f	○	f-h	○
a-d	X	c-g	X	g-a	○
a-f	○	c-h	○	g-b	○
a-g	X	d-a	○	g-c	○
a-h	○	d-b	○	g-d	X
b-a	○	d-c	○	g-f	○
b-c	○	d-f	○	g-h	○
b-d	X	d-g	X	h-a	○
b-f	○	d-h	○	h-b	○
b-g	X	f-a	○	h-c	○
b-h	○	f-b	○	h-d	X
c-a	○	f-c	○	h-f	○
c-b	○	f-d	X	h-g	X

○: Indicates continuity X: No continuity

Note
Set the ohmmeter to x1000Ω range.

2. If continuity is not as specified, replace the checker.

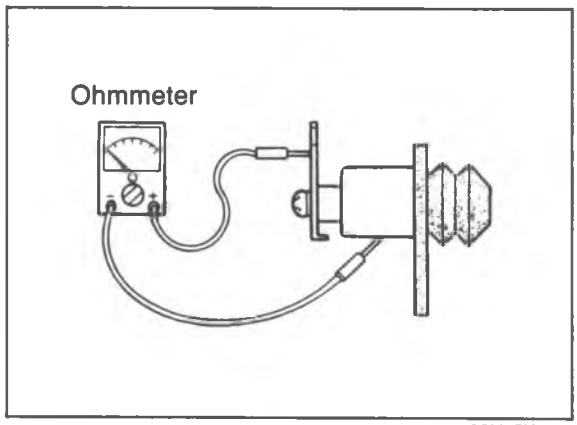

86U15X-068

Door Switch

1. Check for continuity of the switch with an ohmmeter.

Switch	Continuity
Pushed	No
Released	Yes

2. If continuity is not as specified, replace the switch.

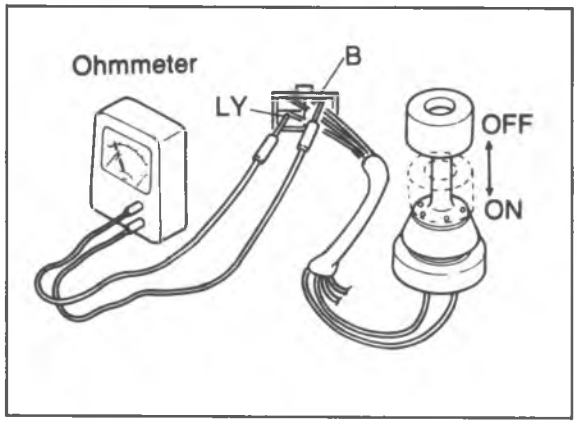

86U15X-069

Washer Level Sensor

1. Check for continuity between **C (LY)** terminal and **D (B)** terminal of the washer level sensor connector.

Terminals	Float level	Continuity
C (LY)—D (B)	Bottom	Yes
	Above bottom	No

2. If continuity is not as specified, replace the sensor.

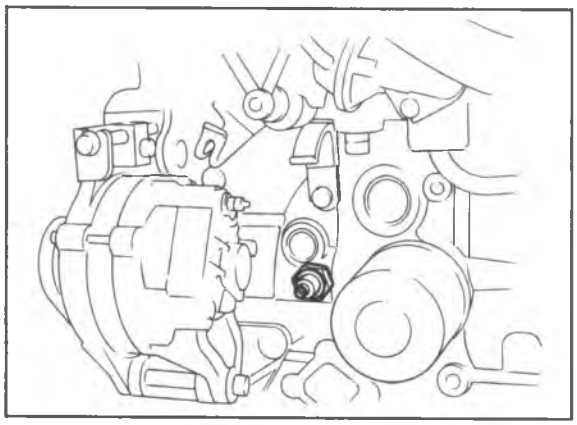

86U15X-070

Oil Pressure Switch

1. Disconnect the connector from the oil pressure switch.
2. Check for continuity between the switch and a body ground with each condition.

Engine	Continuity
Running	No
Stop	Yes

CENTRAL PROCESSING UNIT (CPU)

STRUCTURAL VIEW

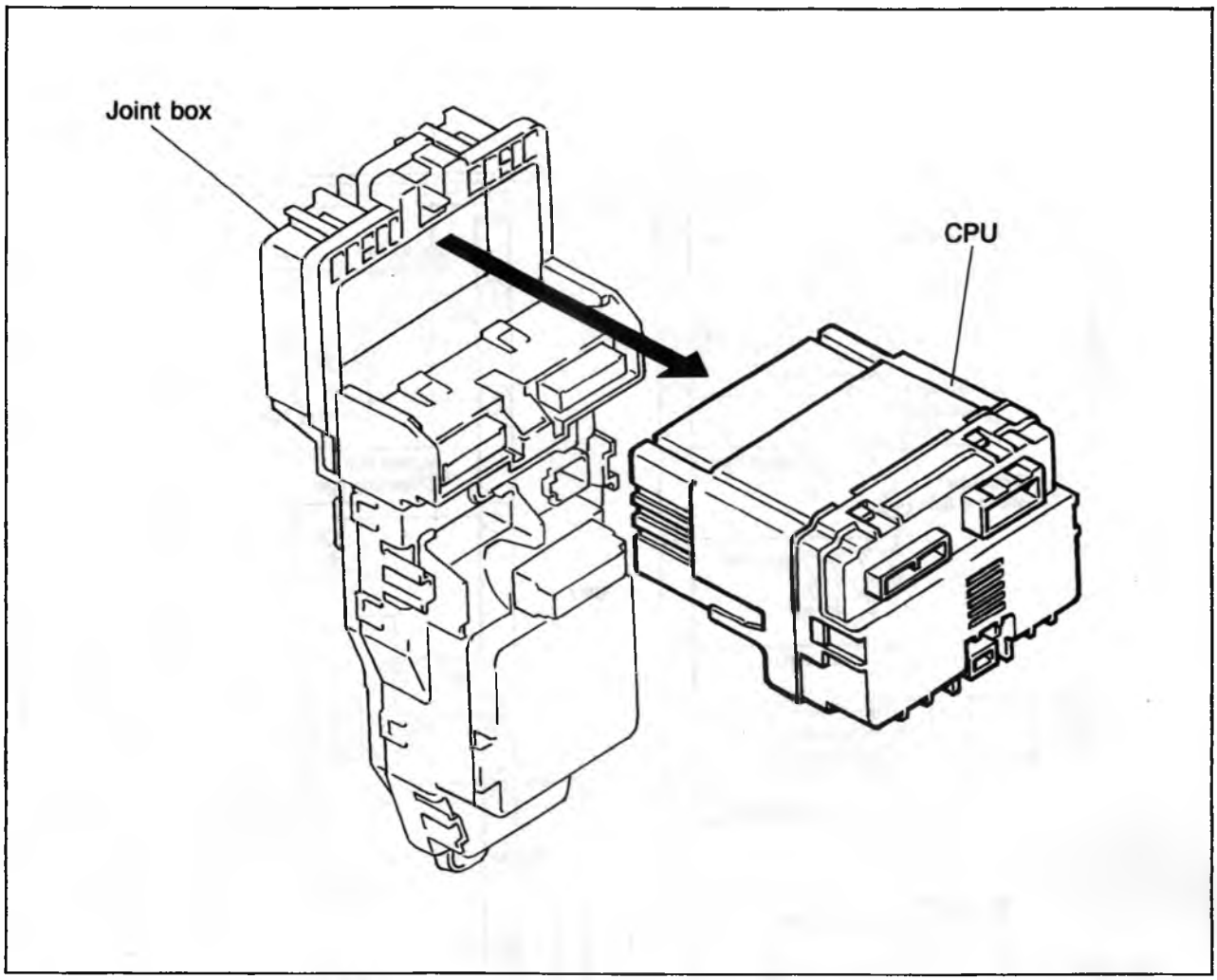

86U15X-071

FUNCTIONS

Sound Alarm System	Key reminder alarm
	Light-off reminder alarm
	Seat belt alarm
	Automatic shoulder belt alarm (only automatic should belt model)
	Turbo charge alarm (only turbocharge model)
Timer System	Seat belt timer
	Key illumination light timer
	Interior light timer
Theft-Deterrent System refer to page 15—139	—

86U15X-072

CIRCUIT DIAGRAM

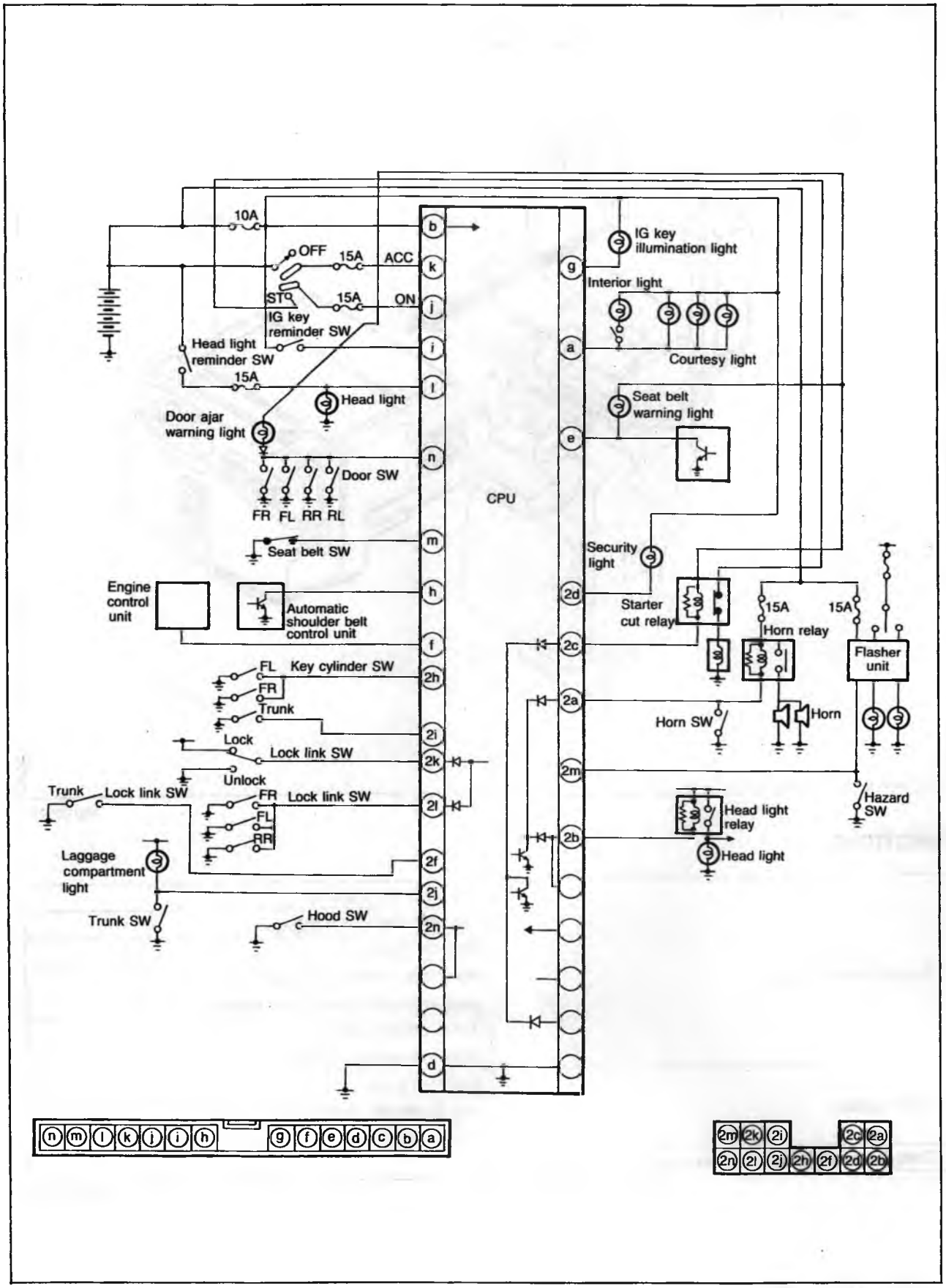

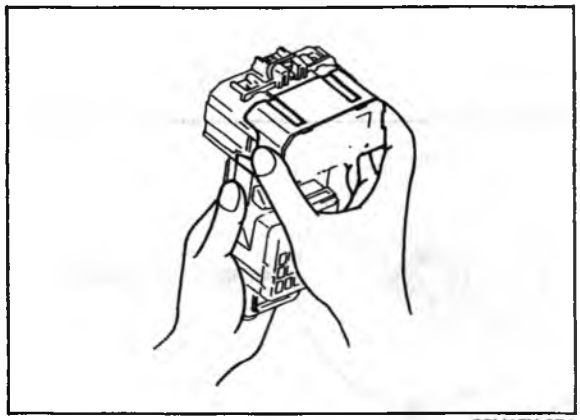

86U15X-074

REMOVAL AND INSTALLATION

1. Disconnect the negative battery cable.
2. Disconnect the CPU connectors.
3. Release the lock and remove the CPU from the joint box.
4. Install in the reverse order of removal.

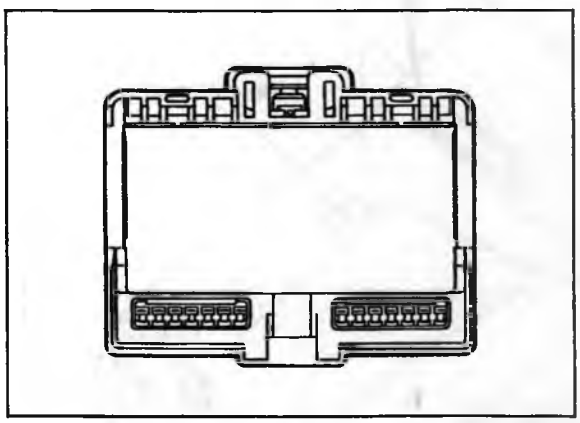

86U15X-075

ON-VEHICLE INSPECTION

Note: Check the voltage between "a through l" terminal and ground.
Check the continuity between "m, n" terminal and ground.

Terminal	Connecting to	Measurement condition	Measurement value
a	Interior light and courtesy lights	Any time	Approx. 12V
b	Battery	Any time	Approx. 12V
c	No used	—	—
d	Ground	Any time	0V
e	Seat belt warning light	Ignition switch on	Approx. 12V
f	Engine control unit	Engine running	Approx. 12V
g	Key cylinder illumination light	Any time	Approx. 12V
h	Automatic shoulder belt control unit	Ignition switch ON	
i	Key reminder switch	Insert the key into the cylinder Pull out the key from the cylinder	Approx. 12V 0V
j	Ignition switch (ON)	Ignition switch ON Ignition switch OFF or ACC	Approx. 12V 0V
k	Ignition switch (ACC)	Ignition switch ON or ACC Ignition switch OFF	Approx. 12V 0V
l	Light switch (In the combination switch)	Turn the light switch ACC and ON Light switch OFF	Approx. 12V 0V
m	Seat belt switch	Seat belt fastened Seat belt unfastered	0Ω ∞
n	Door switch	Door closed Door open	∞ 0Ω

86U15X-076

TURN AND HAZARD LIGHT

STRUCTURAL VIEW

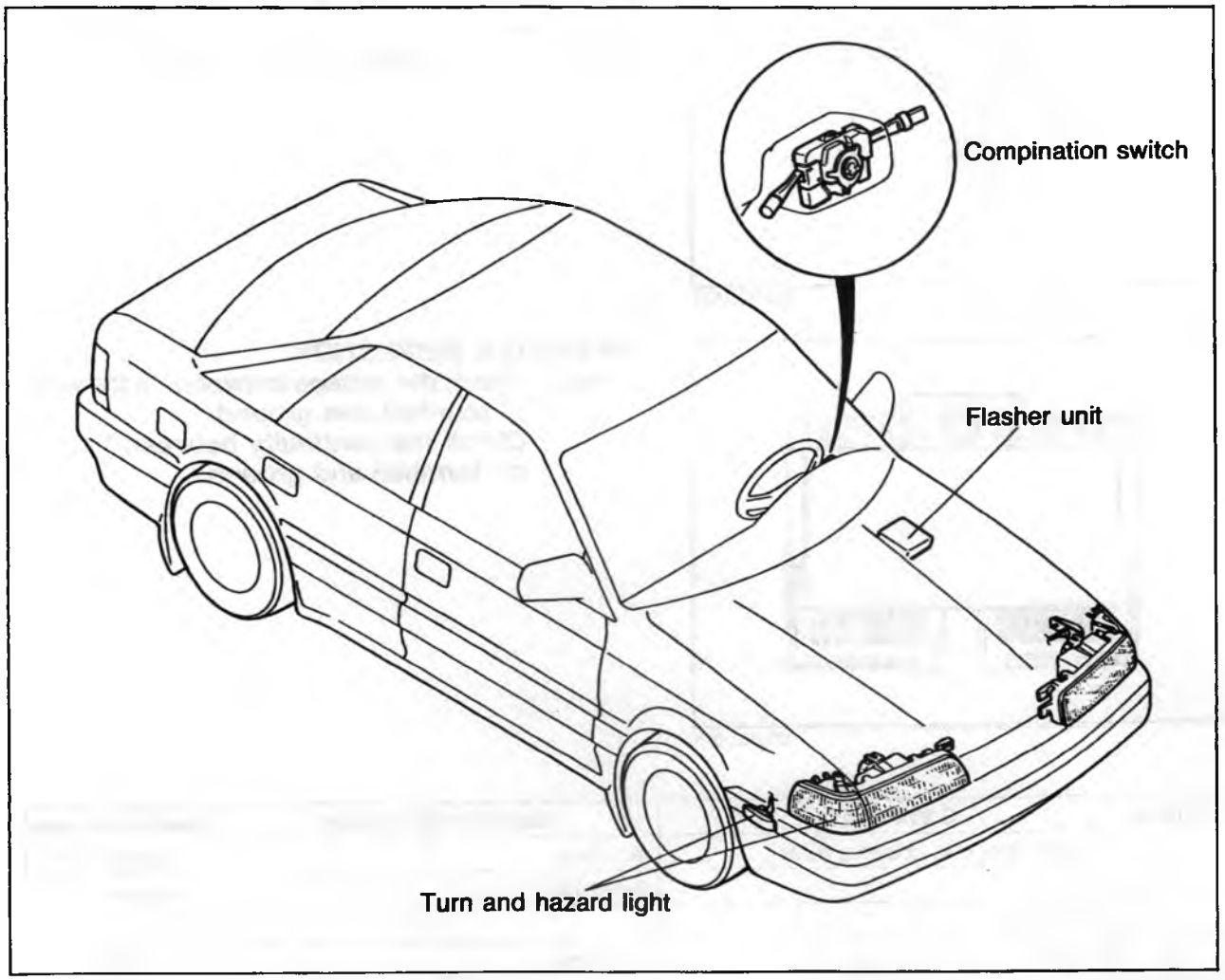

86U15X-077

CIRCUIT DIAGRAM

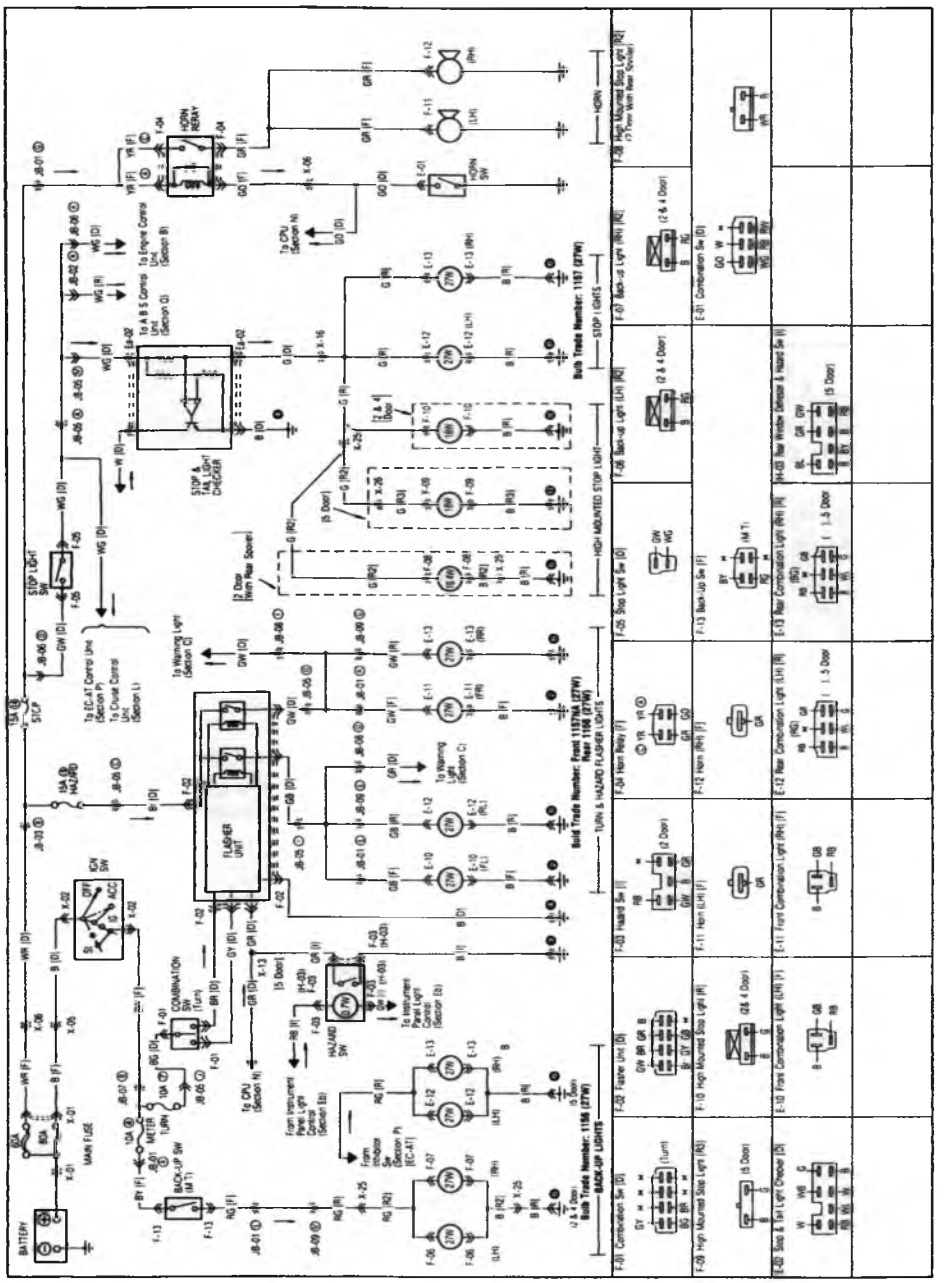

TROUBLESHOOTING

Note
Check the TURN 15A fuse in the fuse box before troubleshooting.

Turn function does not operate.

Check the flasher unit. Refer to page 15—43
- NG → Replace the unit.
- OK ↓

Check the turn signal switch. Refer to page 15—13
- NG → Replace the switch.
- OK ↓

Check the voltage at H (BG) terminal of the combination switch (Turn).

Terminal	Voltage
H (BG)	12V

- NG → Repair harness. (Fuse box to combination switch)
- OK ↓

Check the voltage between each terminal of flasher unit connector and a body ground with each condition.

Terminal	Condition	Voltage
A (B)	Any time	0V
E (BR)	Turn switch is Right	12V
F (GY)	Turn switch is left	12V
H (Br)	Any time	12V

- NG → Repair harness.

Terminal	Wiring harness
A (B)	Flasher unit to ground
E (BR)	Flasher unit to combination switch
F (GY)	Flasher unit to combination switch
H (Br)	Fuse box to Flasher unit

- OK ↓

Check the lights and wiring harness (Each bulb to a body ground)
- NG → Replace the lights or repair the wiring harness.
- OK ↓

Repair harness. (Flasher unit to each bulb)

86U15X-079

Hazard function does not operate. (Turn function is normal)

Check the hazard switch. Refer to page 15—16, 17
- NG → Replace the switch.
- OK ↓

Check the voltage at each terminal of the hazard switch connector.

Terminal	Voltage
B (GR)	12V
D (B)	0V

- NG → Repair the wiring harness. (Flasher unit to hazard switch, hazard switch to ground)
- OK ↓

Check the flash unit. Refer to page 15-43.
- NG → Replace the unit.

Rapid flashing

↓

Check the lights and wiring harness between each bulb and a body ground (rapid flashing side).

86U15X-081

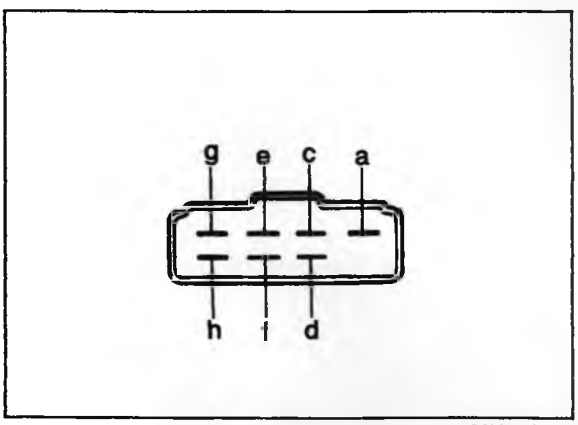

86U15X-082

INSPECTION

Hazard and Flasher Unit

1. Check for continuity between terminals of the hazard and flasher unit.

Terminal	Continuity	Terminal	Continuity	Terminal	Continuity
a-c	X	d-e	X	f-g	X
a-d	X	d-f	X	f-h	X
a-e	O	d-g	X	g-a	X
a-f	O	d-h	X	g-c	X
a-g	X	e-a	X	g-d	X
a-h	X	e-c	X	g-e	X
c-a	O	e-d	X	g-f	X
c-d	O	e-f	X	g-h	X
c-e	O	e-g	X	h-a	O
c-f	O	e-h	X	h-c	O
c-g	O	f-a	X	h-d	O
c-h	O	f-c	X	h-e	O
d-a	X	f-d	X	h-f	O
d-c	X	f-e	X	h-g	O

O: Indicates continuity X: No continuity

Note
Set the ohmmeter to x1000Ω range.

2. If continuity is not as specified, replace the switch.

STOP LIGHT

STRUCTURAL VIEW

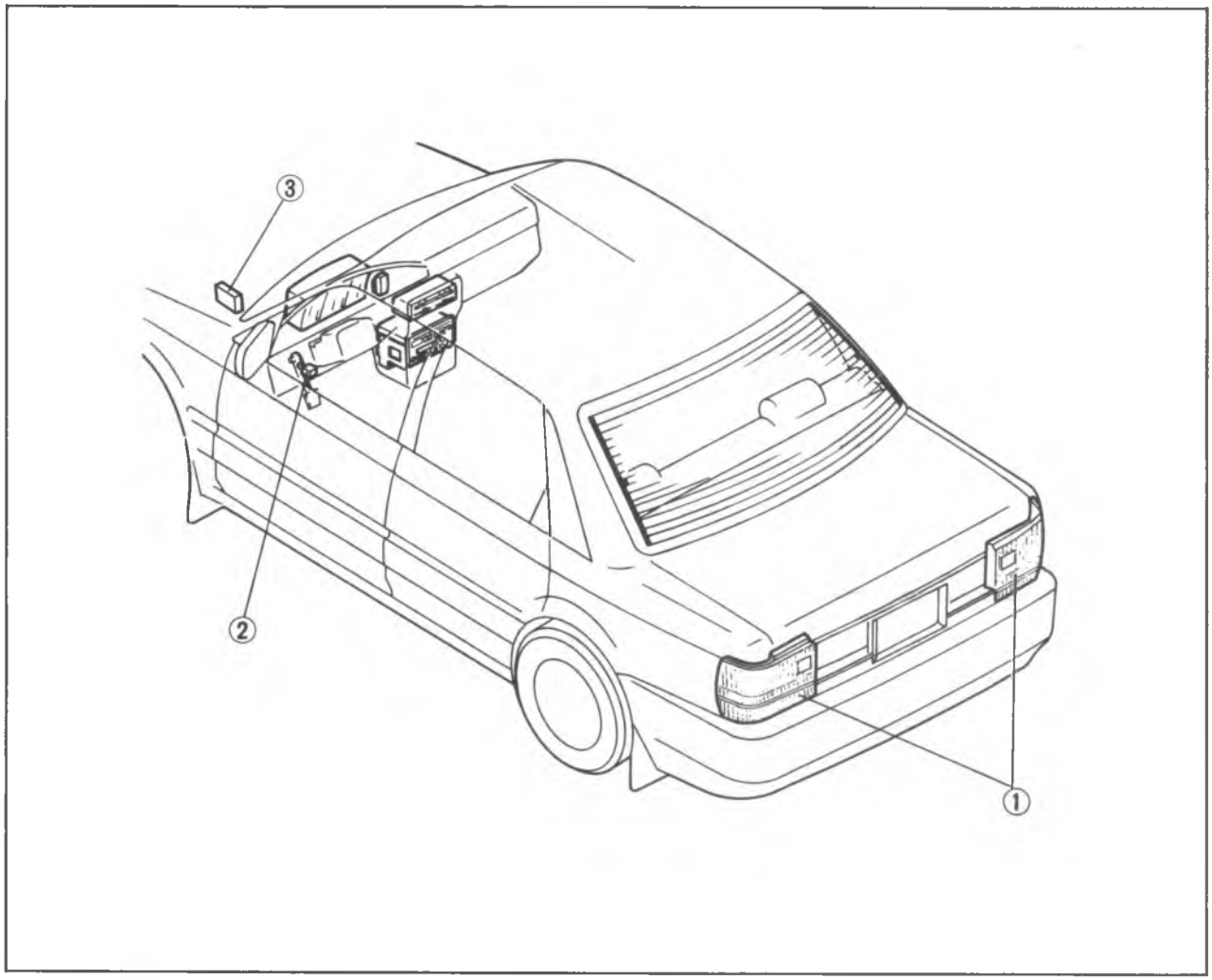

86U15X-083

1. Stop light
2. Stop light switch
3. Stop and tail light checker

CIRCUIT DIAGRAM

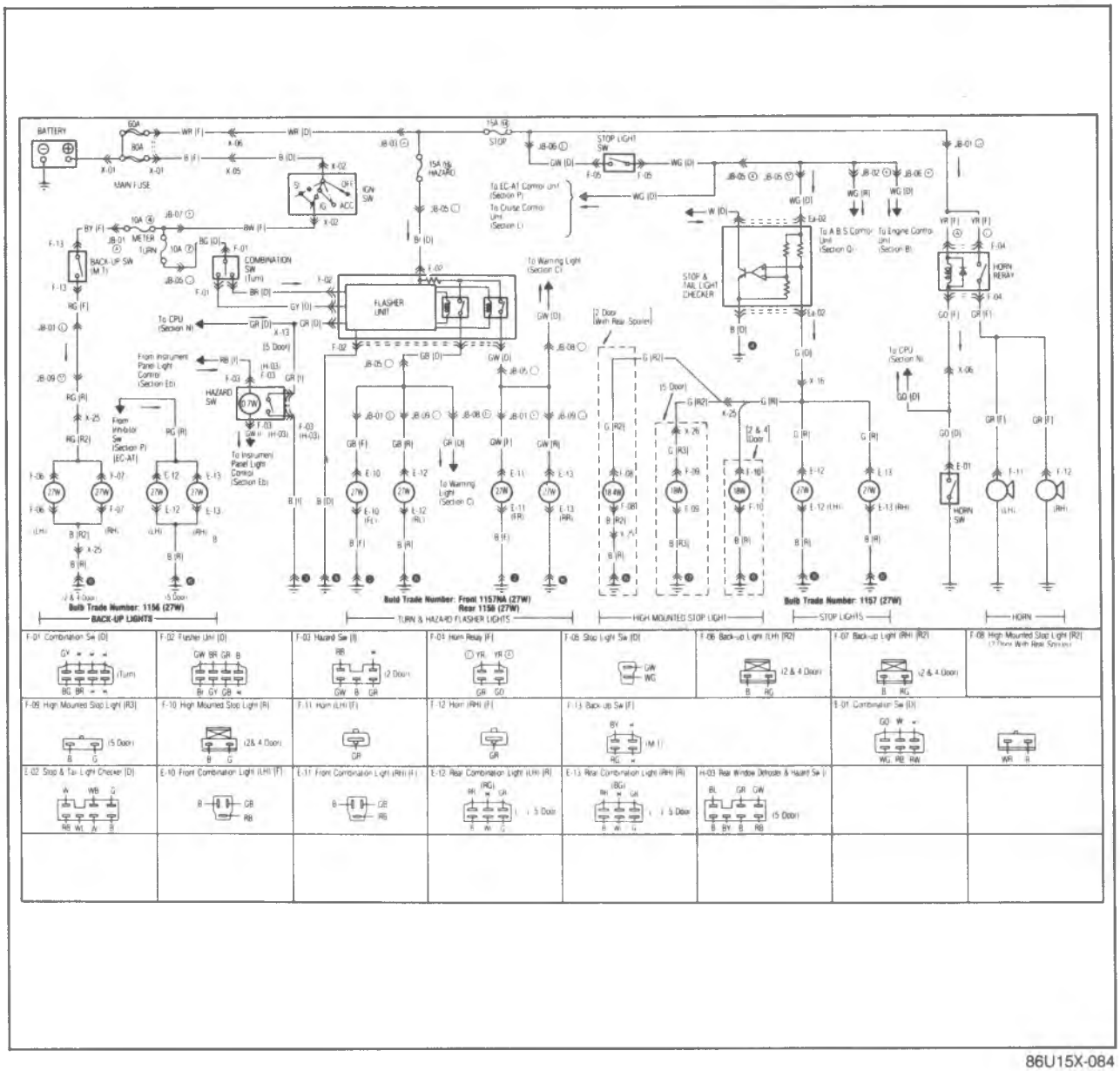

86U15X-084

TROUBLESHOOTING

Note
Check the STOP 15A fuse in the fuse box before troubleshooting.

One side stop light does not illuminate.

↓

Replace the bulb or repair the wiring harness (Stop and tail light checker to bulb, light to ground).

86U15X-085

Both side stop lights do not illuminate when brake on.

Check the voltage at A (GW) terminal of stop light switch connector.

Terminal	Voltage
A (GW)	12V

NG → Repair harness. (Fuse box to stop light switch)

OK

Check the stop light switch. Refer to page 15—47

NG → Replace the switch.

OK

Check the voltage between each terminal of the stop and tail light checker connector and a body ground when brake on.

Terminal	Voltage
B (B)	0V
C (WG)	12V

NG → Repair the wiring harness. (Stop light switch to stop and tail light checker, stop and tail light checker to body ground)

OK

Check the stop and tail light checker. Refer to page 15—47

NG → Replace the checker.

OK

Check the stop lights

NG → Replace the light.

OK

Repair the wiring harness. (Stop and tail light checker to bulb, bulb to body ground)

86U15X-086

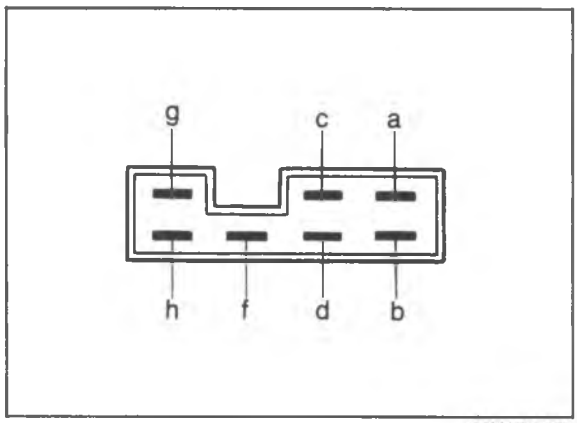

86U15X-087

INSPECTION

Stop And Tail Light Checker

1. Check for continuity between terminals of the stop and tail light checker.

Terminal + –	Continuity	Terminal + –	Continuity	Terminal + –	Continuity
a-b	O	c-d	X	f-g	X
a-c	O	c-f	O	f-h	O
a-d	X	c-g	X	g-a	O
a-f	O	c-h	O	g-b	O
a-g	X	d-a	O	g-c	O
a-h	O	d-b	O	g-d	X
b-a	O	d-c	O	g-f	O
b-c	O	d-f	O	g-h	O
b-d	X	d-g	X	h-a	O
b-f	O	d-h	O	h-b	O
b-g	X	f-a	O	h-c	O
b-h	O	f-b	O	h-d	X
c-a	O	f-c	O	h-f	O
c-b	O	f-d	X	h-g	X

O: Indicates continuity X: No continuity

Note
Set the tester to x1000Ω range.

2. If continuity is not as specified, replace the checker.

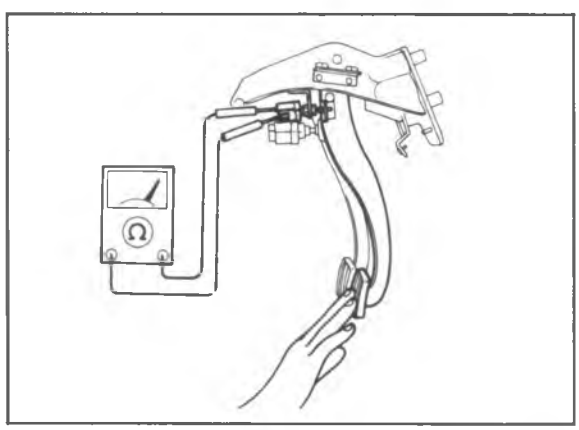

86U15X-088

Stop Light Switch

1. Disconnect the stop light switch connector.
2. Check for continuity between terminals of the switch.

Position \ Terminal	a	b
Pedal depressed	O——O	
Pedal released		

O——O : Indicates continuity

HORN

STRUCTURAL VIEW

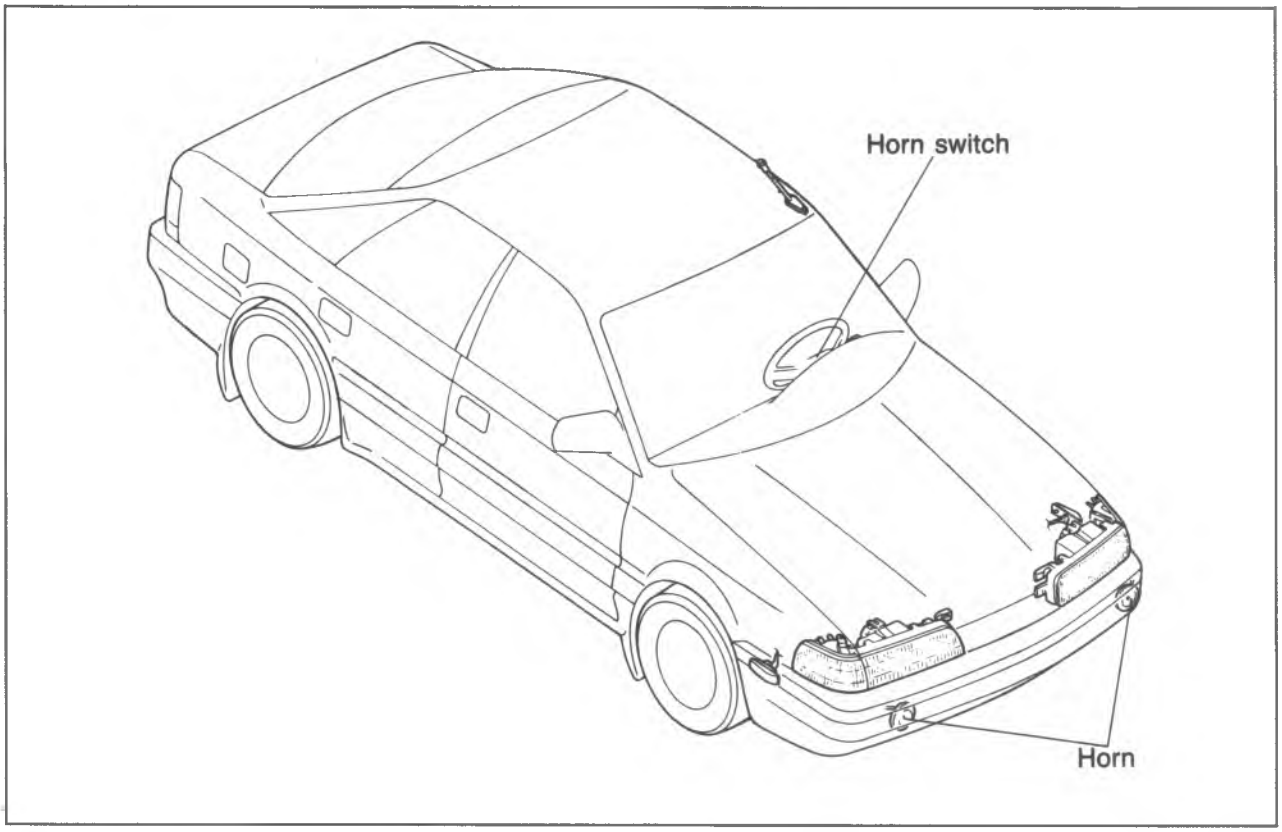

86U15X-089

CIRCUIT DIAGRAM

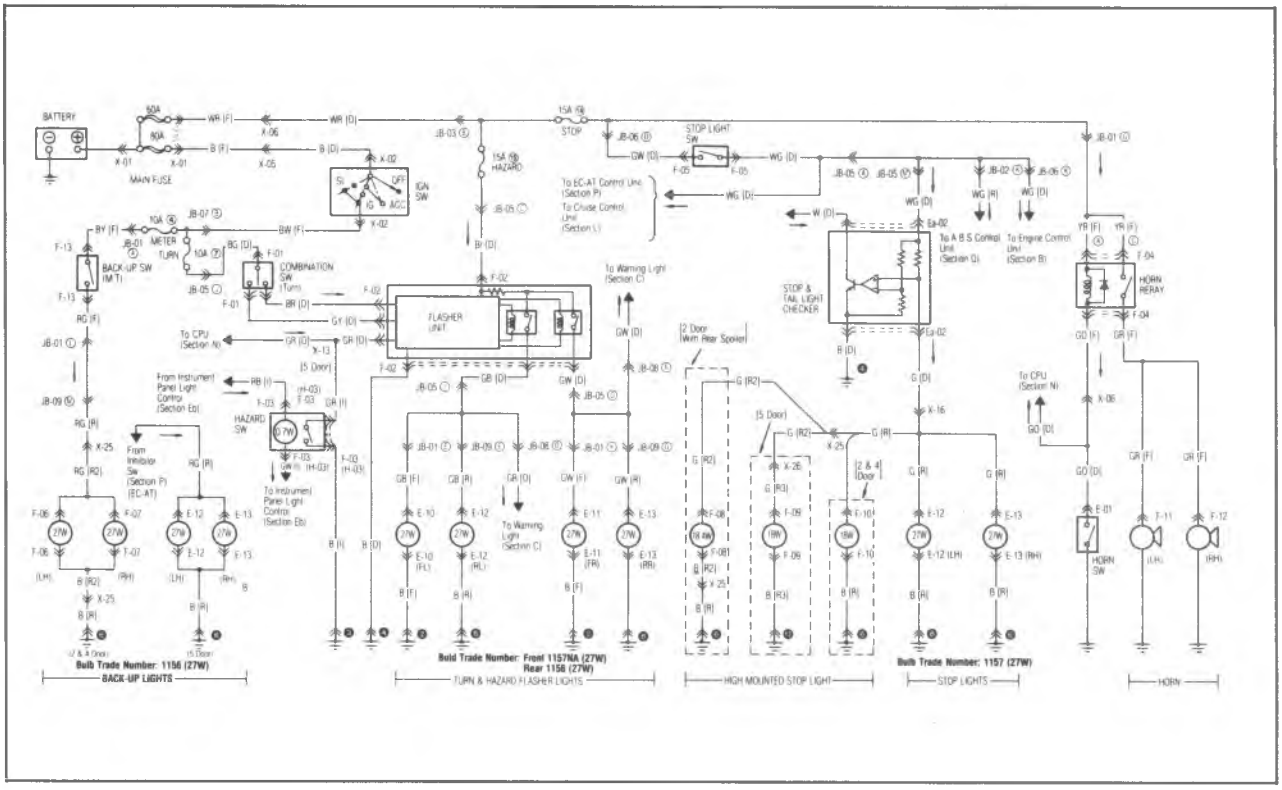

86U15X-090

TROUBLESHOOTING

Horn does not sound.

OK

Check STOP 15A fuse. — **NG** → Short circuit.

OK

Check the voltage between each terminal of the horn relay and a body ground.

Terminal	Voltage
A (YR)	12V
C (YR)	12V

NG → Repair wiring harness. (Fuse box to horn relay)

OK

Check that horn sounds with B (GO) terminal of horn relay connector grounded. — **OK** → Check that horn sounds with E (GO) terminal combination switch 6 pin connector grounded.

- **NG** → Repair harness (Horn relay to horn switch)
- **OK** → Replace the horn switch or repair wiring harness. (Horn switch to body ground)

NG

Check the horn relay. Refer to inspection below. — **NG** → Replace the horn relay.

OK

Apply 12V directly to horn, and check that horn sounds. — **OK** → Repair harness. (Horn relay to horn)

NG

Replace the horn or repair the harness. (Horn to body ground)

86U15X-091

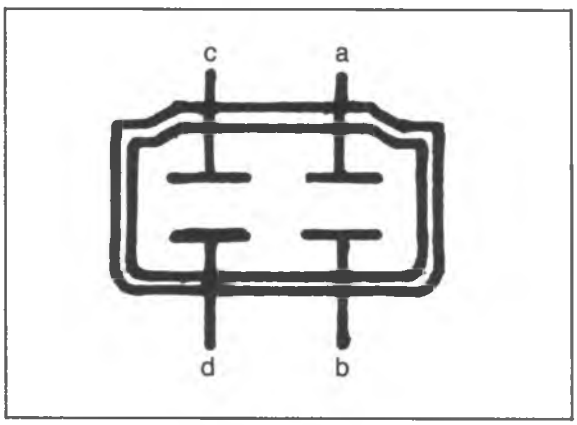

86U15X-092

INSPECTION

Horn Relay

Check for continuity between terminals of the relay.

Connecting to		Terminal			
12V	Ground	a	b	c	d
—	—	○—○			
a	b			○—○	

○—○: indicates continuity

HEADLIGHT

STRUCTURAL VIEW

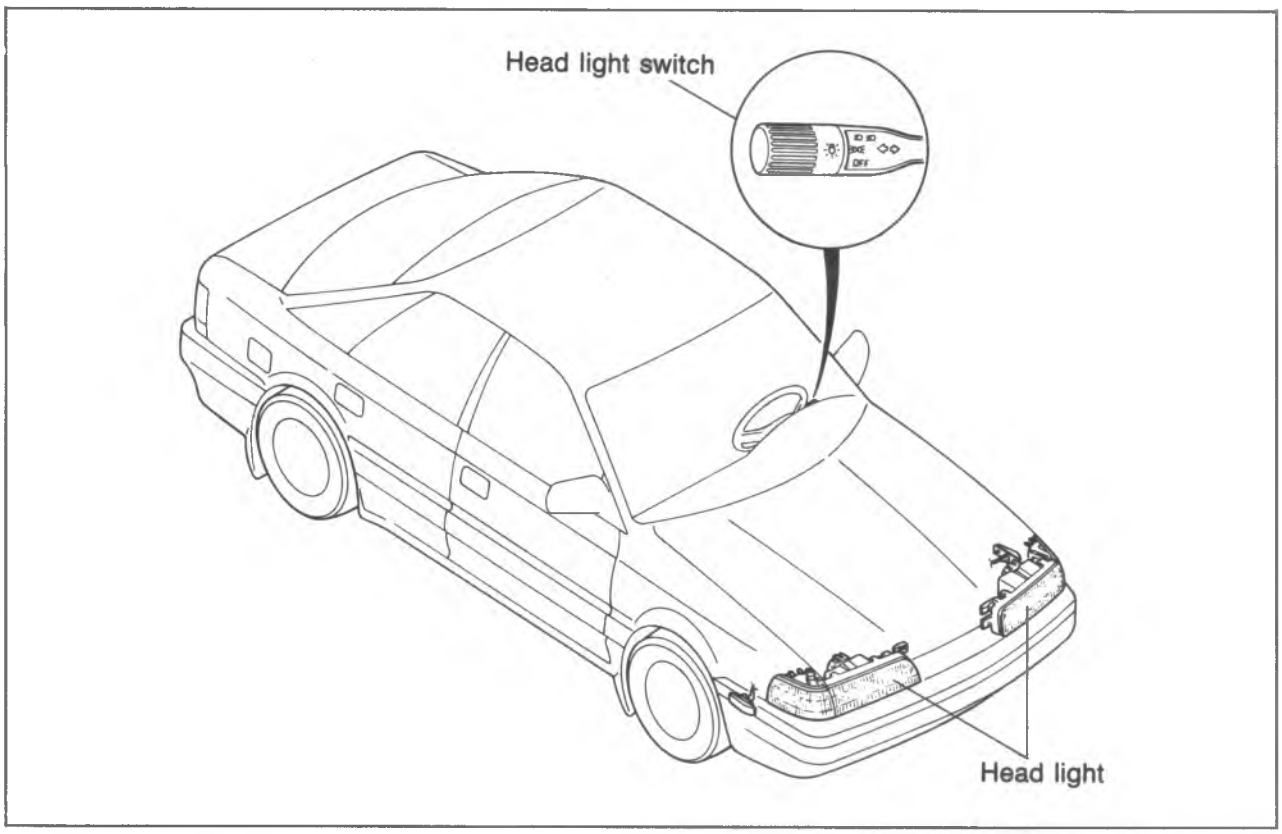

86U15X-093

CIRCUIT DIAGRAM

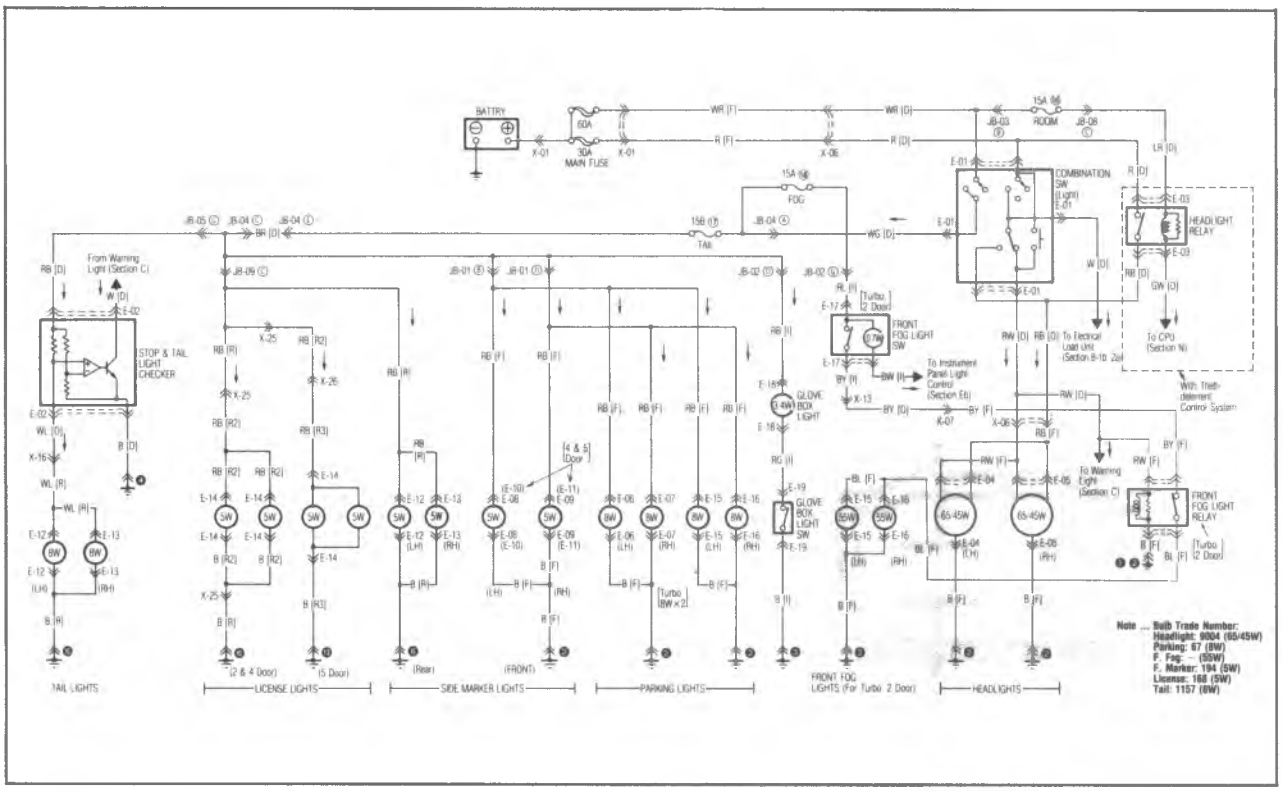

86U15X-094

TROUBLESHOOTING

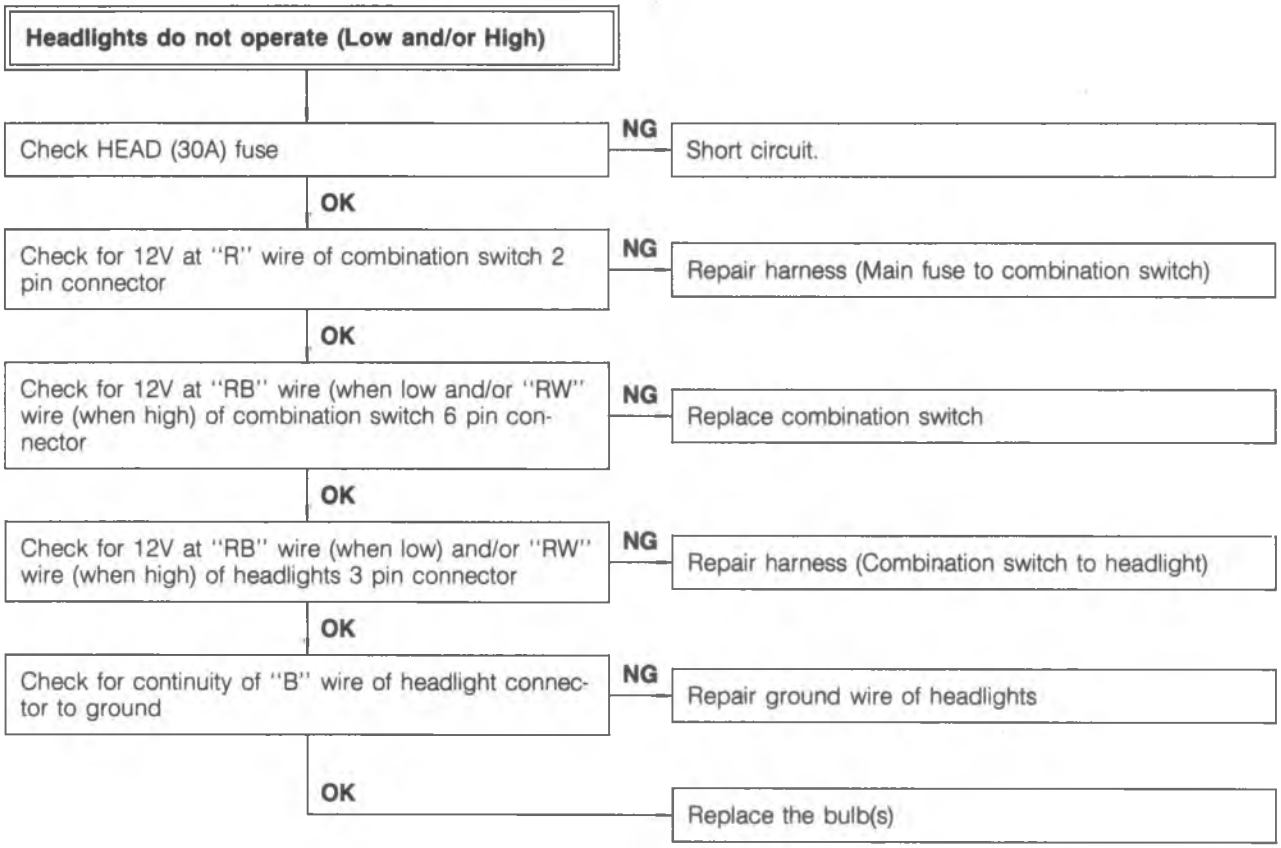

86U15X-095

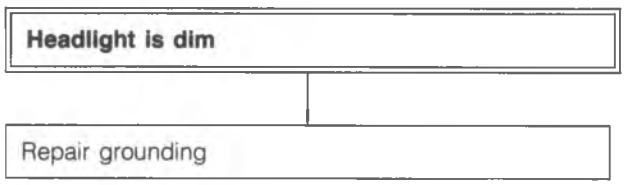

86U15X-096

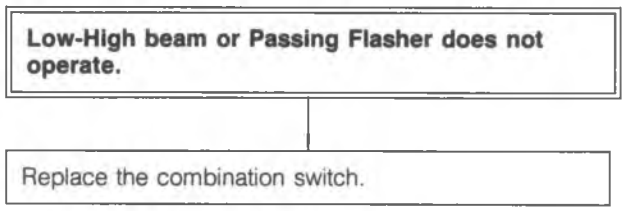

86U15X-097

PANEL LIGHT CONTROL

CIRCUIT DIAGRAM

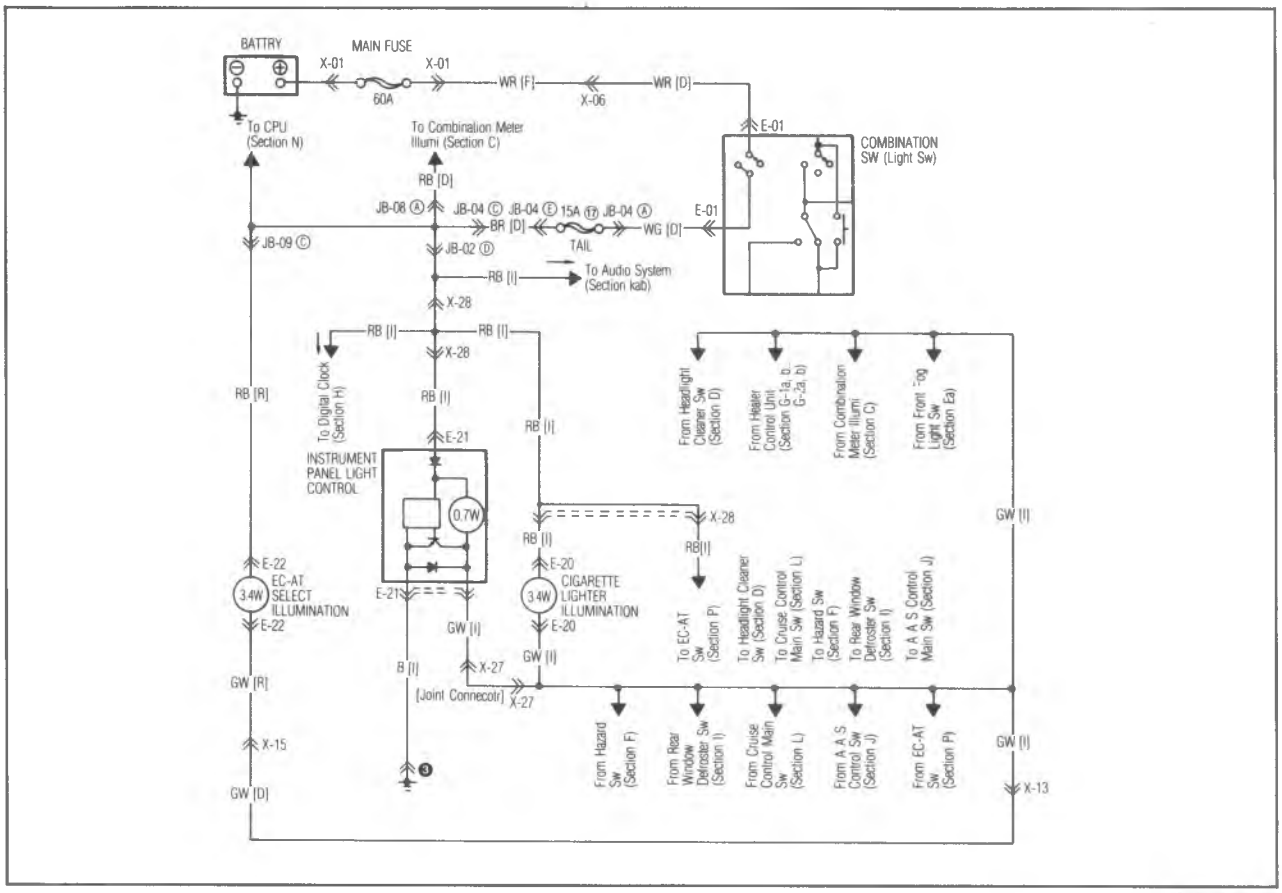

86U15X-098

TROUBLESHOOTING

Brightness of the illumination lights cannot be controlled.

Check the panel light controller. Refer to page 15—53 → **NG** → Replace the controller.

OK ↓

Check the voltage between each terminal of the panel light controller connector and a body ground.

Terminal	Voltage
B (RB)	12V
C (B)	0V

NG → Repair the wiring harness. (Fuse box to panel light controller, Panel light controller to body ground)

86U15X-099

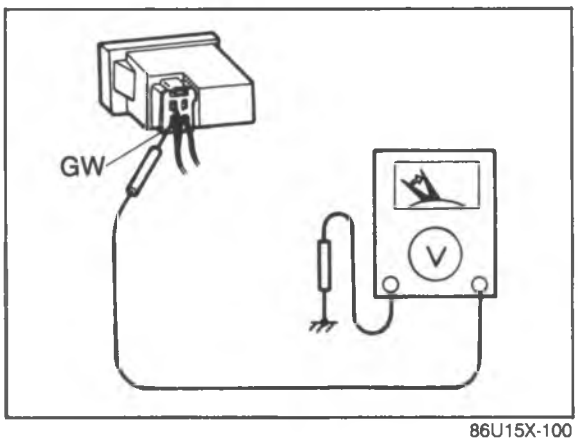

86U15X-100

INSPECTION

Panel Light Controller

1. Remove the panel light controller.
2. Check the voltage at **D (GW)** terminal of the panel light controller.

Panel light controller	Voltage
Min	10V
Max.	0V

REAR WINDOW DEFROSTER

STRUCTURAL VIEW

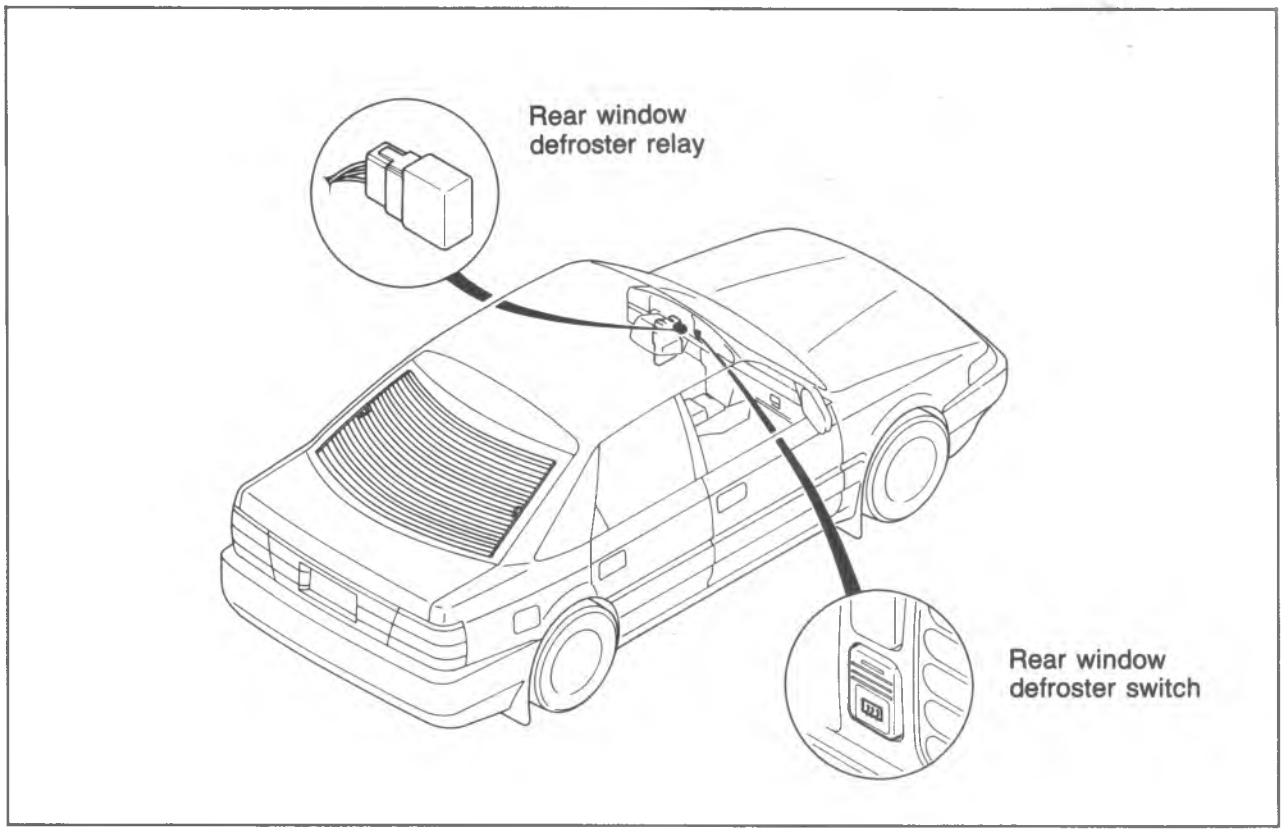

86U15X-101

CIRCUIT DIAGRAM

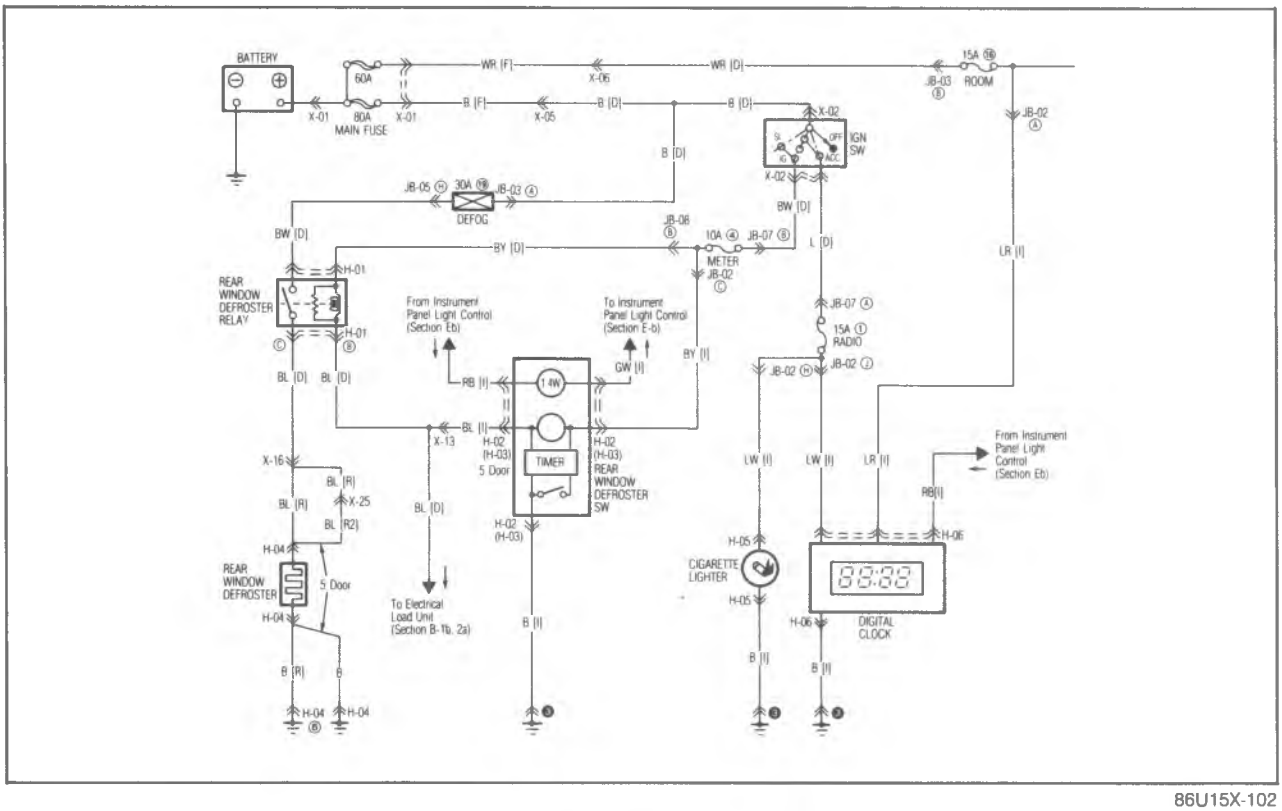

86U15X-102

TROUBLESHOOTING

Defroster does not operate

- Check circuit breaker (defroster 30A), MAIN fuse (60A), and METER 10A fuse.
  - NG → Short circuit.
  - OK ↓
- Check for 12V at D (BW) terminal of defroster relay connector.
  - NG → Repair harness (Circuit breaker—Defroster relay).
  - OK ↓
- Turn ignition switch ON.
- Check for 12V at A (BY) terminal of defroster relay connector.
  - NG → Repair harness (Fuse box—Defroster relay).
  - OK ↓
- Check for 12V at F (BY) terminal of defroster switch connector.
  - NG → Repair harness (Fuse box—Defroster switch).
  - OK ↓
- Check for 0V at B (B) terminal of defroster switch connector.
  - NG → Repair harness (Defroster switch—Body ground).
  - OK ↓
- Check for 0V at D (BL) terminal of defroster switch connector.
  - NG → Inspect the defroster switch referring to page 15—16,17. Replace if necessary.
  - OK ↓
- Check for 0V at B (BL) terminal of defroster relay connector with defroster switch ON.
  - NG → Repair harness (Defroster relay—Defroster switch).
  - OK ↓
- Check for 12V at C (BL) terminal of defroster relay connector.
  - NG → Inspect the defroster relay referring to page 15—56. Replace if necessary.
  - OK ↓
- Check for 12V at (BL) terminal of defroster connector.
  - NG → Repair harness (Defroster relay—Defroster).
  - OK ↓
- Check for 0V at (B) terminal of defroster connector.
  - NG → Repair harness (Defroster—Body ground).
  - OK ↓
- Inspect the defroster filament referring to page 15—56. Replace or repair if necessary.

86U15X-103

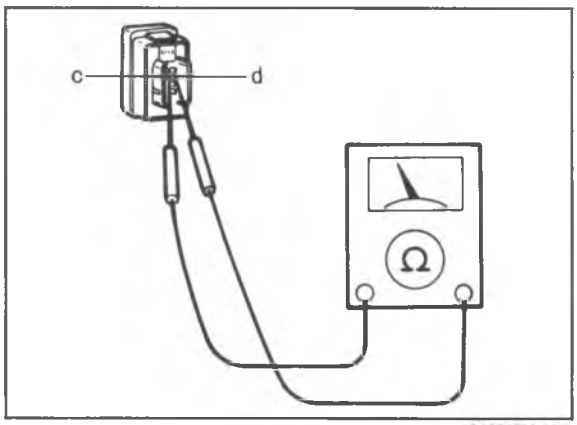

86U15X-104

INSPECTION

Defroster Relay

1. Check for continuity between terminals of the relay.

Connecting to		a	b	c	d
12V	ground				
—	—	O—O			
a	b			O—O	

O——O: Indicates continuity

2. If continuity is not as specified, replace the relay.

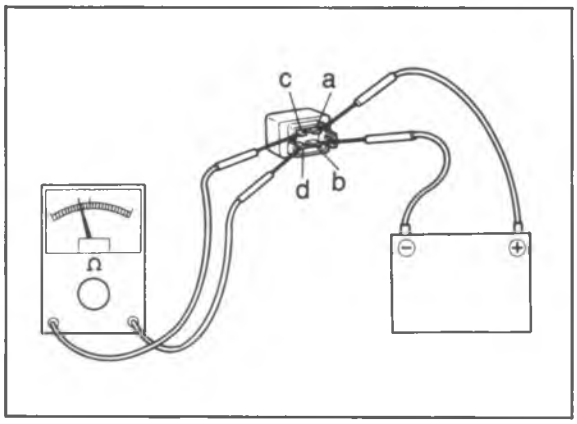

86U15X-105

Defroster Filament

1. Turn the ignition switch ON.
2. Turn the rear window defroster switch ON.
3. Connect the (+) terminal of the voltmeter to the right side or the center of each filament and the (–) terminal to ground.
   The standard voltage is approx. **6V** at the right side and approx. **3V** or **9V** at the center.
   If the meter indication is higher than specified, the problem exists in the ground side of the filament. If the indication is low or zero, the problem is in the power side.

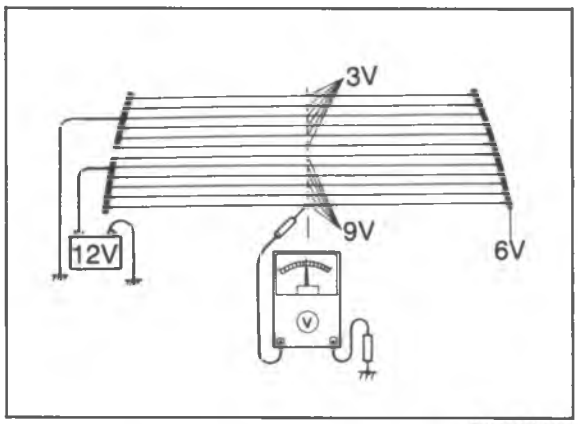

86U15X-106

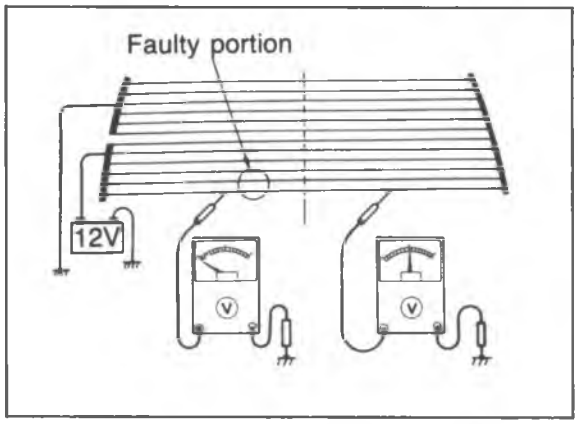

86U15X-107

Repairing Filament

1. Use paint thinner or ethyl alcohol to clean the damaged part of the filament.
2. Attach tape to both sides of the damaged part of the filament.
3. Using a small brush or marking pen, apply silver paint (part no 2835 77 600) or equivalent to the damaged part.
4. Let the paint set for 24 hours at 20°C (68°F) to let it dry completely. (If a blow dryer is used to heat it to 60°C (140°F), it can be dried in about 30 minutes.)

Note

a) Do not use the rear-window defroster until the paint is dry.

b) Do not use gasoline or similar solvents to clean the damaged part.

POWER WINDOW

STRUCTURAL VIEW

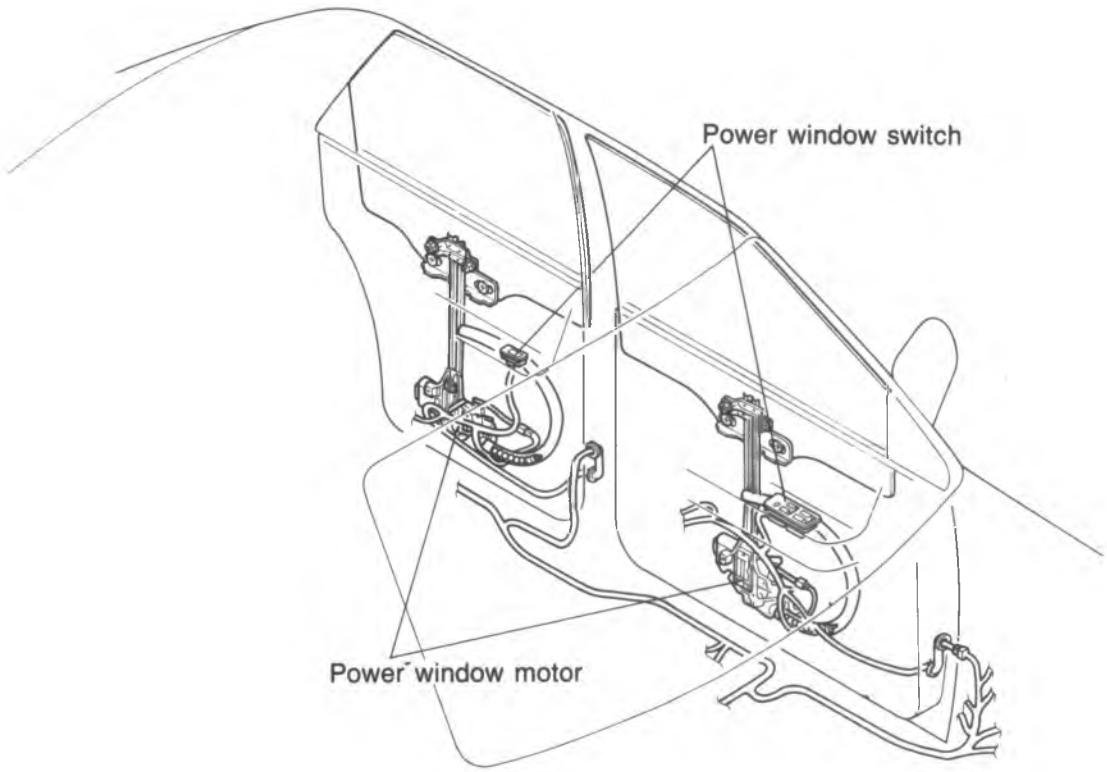

86U15X-108

CIRCUIT DIAGRAM

(For MX-6)

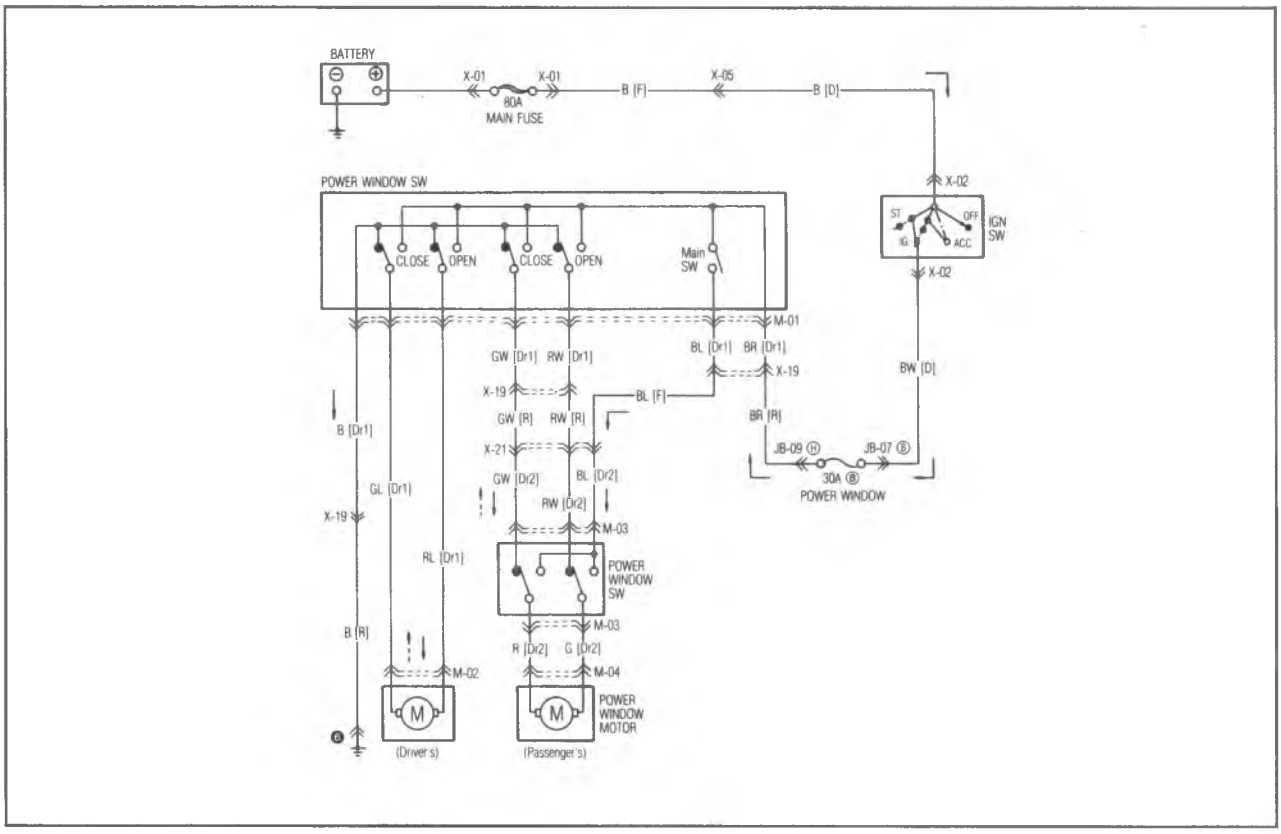

86U15X-109

(For Sedan and Touring Sedan)

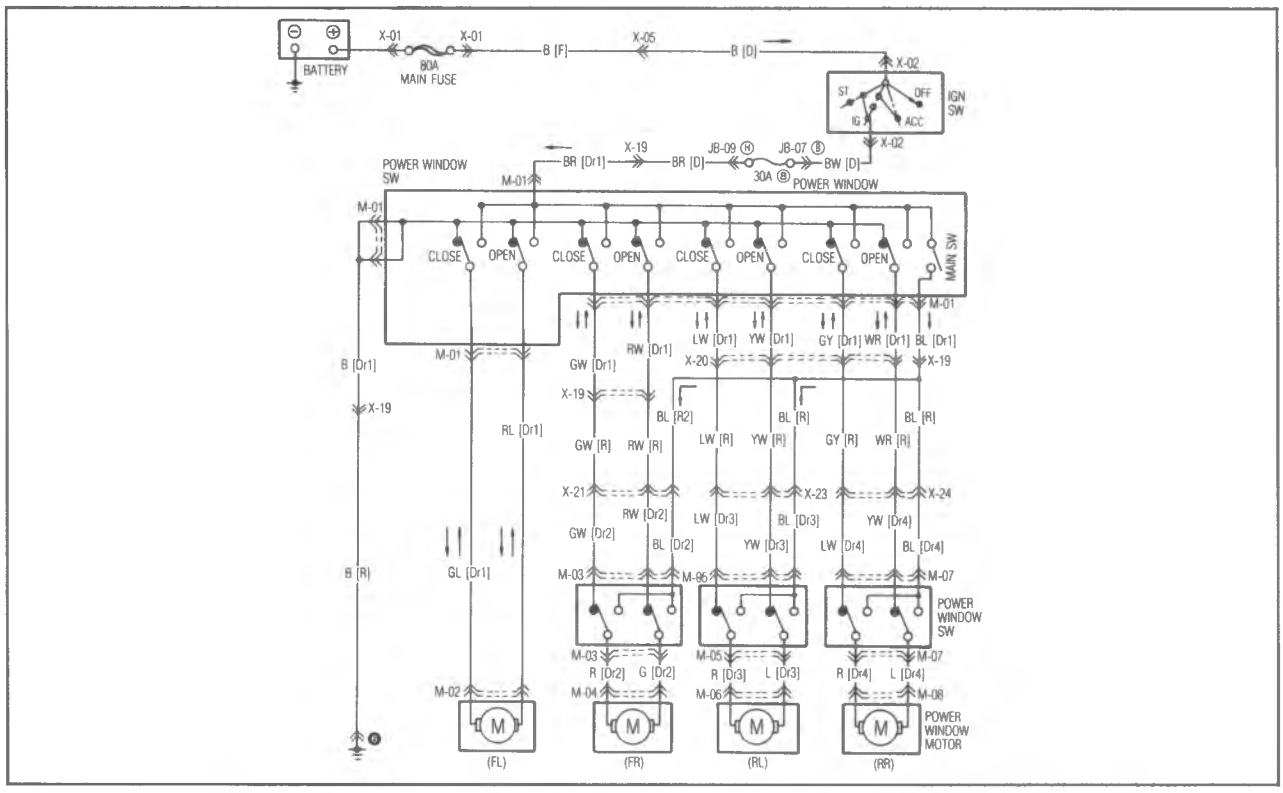

TROUBLESHOOTING

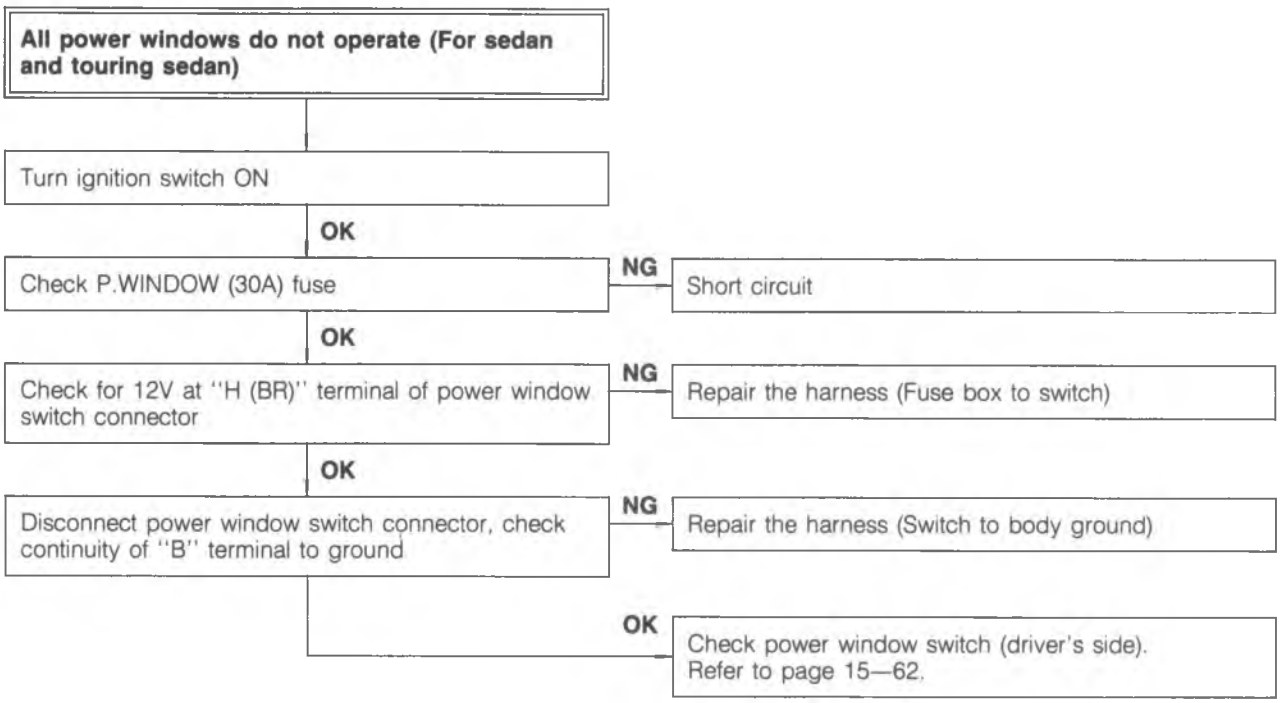

86U15X-110

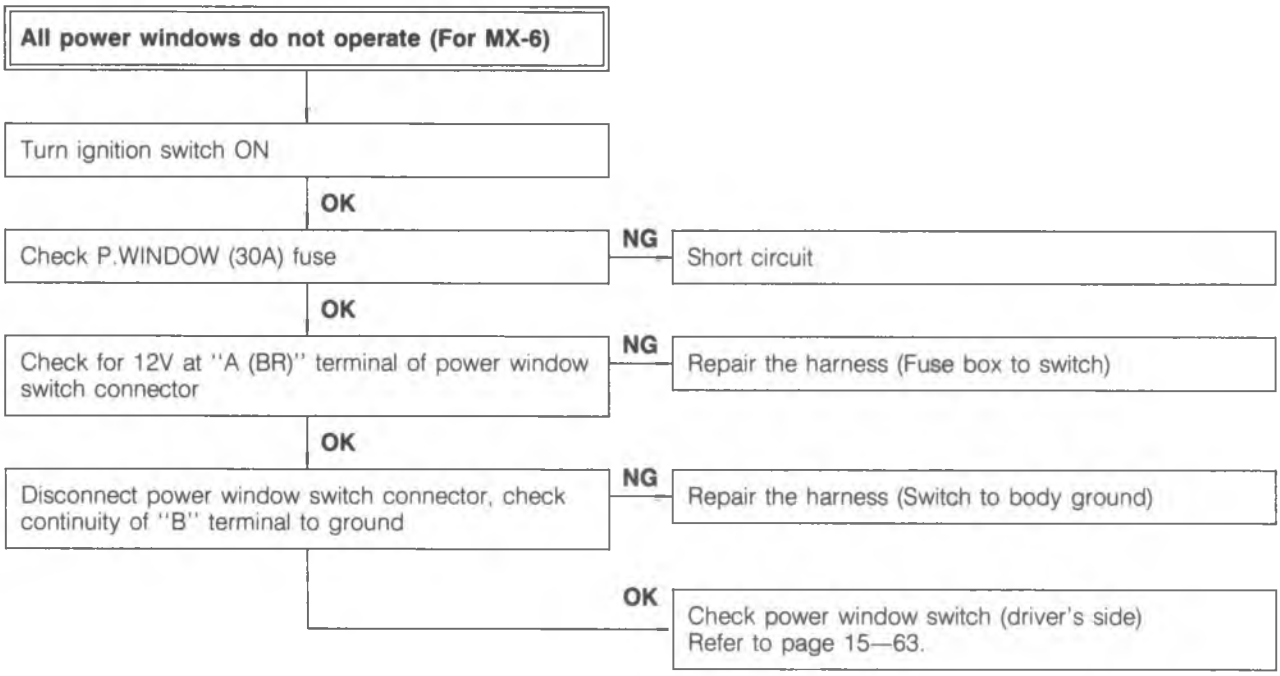

86U15X-111

Only driver's side power window does not operate (For sedan and touring sedan)

Turn ignition switch ON

Check for 12V at "RB" terminal and "GB" terminal of power window switch connector
- Up: "A (GL)" terminal
- Down: "D (RL)" terminal

NG → Check power window switch (driver's side). Refer to page 15—62.

OK

Check for 12V at "RB" terminal and "GB" terminal of motor connector
- Up: "A (GL)" terminal
- Down: "B (RL)" terminal

NG → Repair the harness (Switch to motor)

OK → Check motor. Refer to page 15—64.

86U15X-112

Only driver's side power window does not operate (For MX-6)

Turn ignition switch ON

Check for 12V at "RB" terminal and "GB" terminal of power window switch connector
- Up: "G (GL)" terminal
- Down: "H (RL)" terminal

NG → Check power window switch (driver's side). Refer to page 15—63.

OK

Check for 12V at "RB" terminal and "GB" terminal of motor connector
- Up: "A (GL)" terminal
- Down: "B (RL)" terminal

NG → Repair the harness (Switch to motor)

OK → Check motor. Refer to page 15—64.

86U15X-113

Power windows (except for driver's side) cannot be operated by main switch

Turn ignition switch ON

Note
Use only the main switch during the checking operation.

Check for 12V at terminal of power window switch connector while operating main switch (driver's side)

Door	Operation	Wire
Passenger side	Up	"GW"
	Down	"RW"
Rear left side (except MX-6)	Up	"LW"
	Down	"YW"
Rear right side (except MX-6)	Up	"GY"
	Down	"WR"

NG → Check power window switch (driver's side). Refer to page 15—62, 63.

OK

Check for 12V at terminal to each door power window switch connector (5 pin) while operating main switch (driver's side)

Door	Operation	Wire
Passenger side	Up	"GW"
	Down	"RW"
Rear left side (except MX-6)	Up	"LW"
	Down	"YW"
Rear right side (except MX-6)	Up	"GY"
	Down	"WR"

NG → Repair harness (Main switch—Switch on each door)

OK

Check for 12V at "R" terminal and "G" terminal of each door switch connector (5 pin) while operating main switch (driver's side)
- Up: "R" terminal
- Down: "G" terminal

NG → Check switch on each door. Refer to page 15—63.

OK

Check for 12V at "R" terminal and "G" terminal of each motor connector (2P) while operating main switch (driver's side)
- Up: "R" terminal
- Down: "G" terminal

NG → Repair harness (Switch on each door ~ Motor)

OK → Check motor. Refer to page 15—64.

86U15X-114

Main switch operates, but switch on each door does not operate power window

Turn ignition switch ON
Turn main switch of power window switch (driver's side) to ON

Check for 12V at "BL" terminal of power window switch connector

NG → Check main switch of power window switch. Refer to page 15—62, 63.

OK

Check for 12V at "BR" terminal of switch connector (front, right), "BL" terminal at switch connector (rear)

NG → Repair the harness (Main switch of the power window switch (driver's side) to power window switch (passenger's side))

OK → Check power window switch on each door. Refer to page 15—63.

86U15X-115

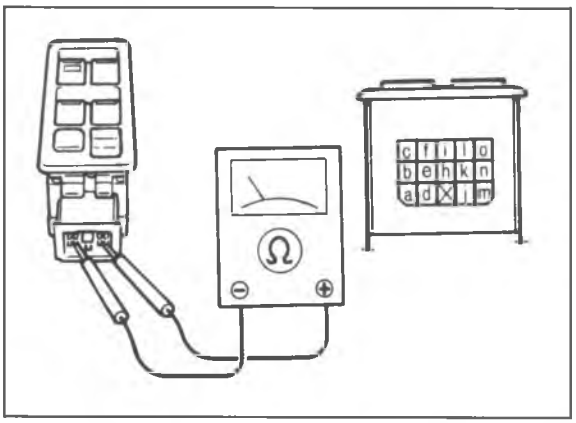

86U15X-116

INSPECTION

Power Window Driver's Side Switch (For Sedan and Touring Sedan)

Check for continuity between terminals of the switch.

Main switch

Position \ Terminal	h	i
Lock		
Unlock	○——	——○

○——○: Indicates continuity

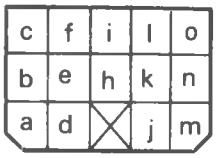

Switch	Driver's side				Passenger's side				Rear right				Rear left			
Terminal / Position	h	f	d	a	h	f	m	j	h	f	e	b	h	f	n	k
UP	○—	——○	○—	——○	○—	——○	——○	——○	○—	——○	○—	——○	○—	——○	——○	——○
OFF	——○	○—	——○	○—	——○	○—	——○	——○	——○	○—	——○	○—	——○	○—	——○	○—
DOWN	○—	——○	——○	——○	○—	——○	○—	——○	○—	——○	○—	——○	○—	——○	○—	——○

○——○: Indicates continuity

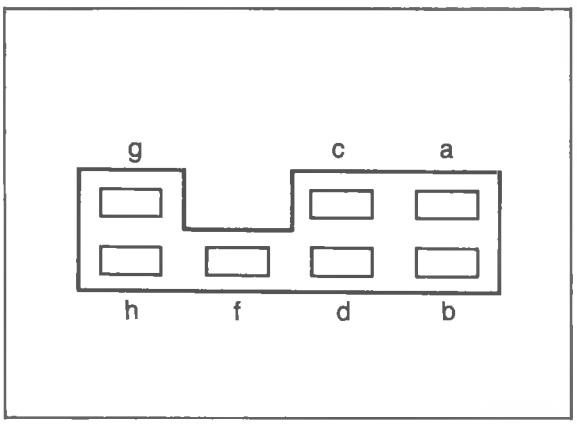

86U15X-117

(For MX-6)
Check for continuity between terminals of the switch.

Main switch

Position \ Terminal	a	c
Lock		
Unlock	○——○	

○——○: Indicates continuity

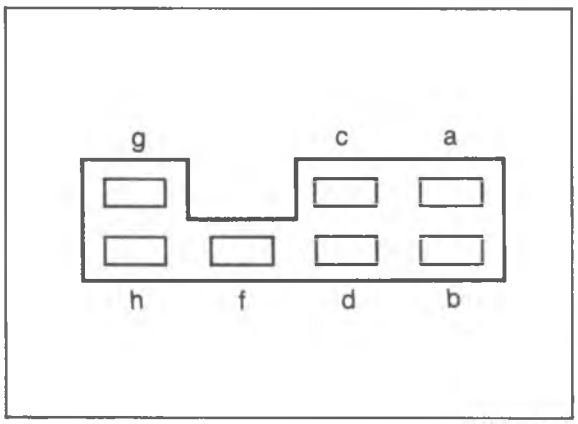

86U15X-118

Switch	Driver's side				Passenger's side			
Position \ Terminal	a	b	h	g	a	b	d	f
UP	○			○	○			○
		○	○			○		○
OFF		○		○		○	○	
		○	○			○		○
DOWN	○		○		○			○
		○		○		○	○	

○——○: Indicates continuity

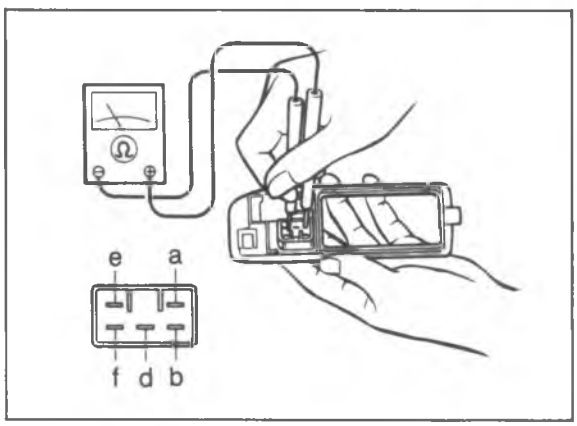

86U15X-119

Switch on Each Side
(For Sedan And Touring Sedan)
Check for continuity between terminals of the switch.

Position \ Terminal	a	b	d	e	f
UP	○			○	
		○	○		
OFF	○			○	
			○		○
DOWN		○		○	
			○		○

○——○: Indicates continuity

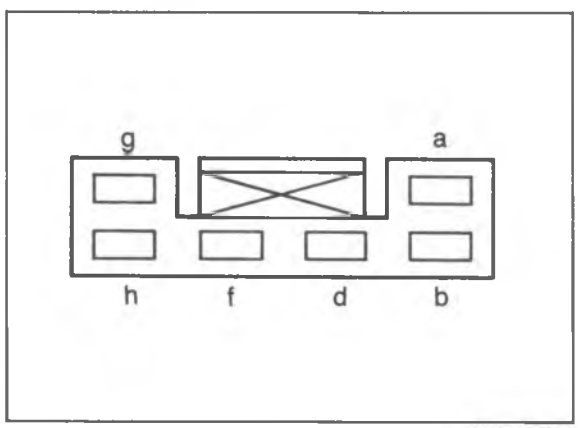

86U15X-120

(For MX-6)
Check for continuity between terminals of the switch.

Position \ Terminal	a	b	d	f	h
UP	○			○	
		○	○		
OFF	○			○	
			○		○
DOWN		○		○	
			○		○

○——○: Indicates continuity

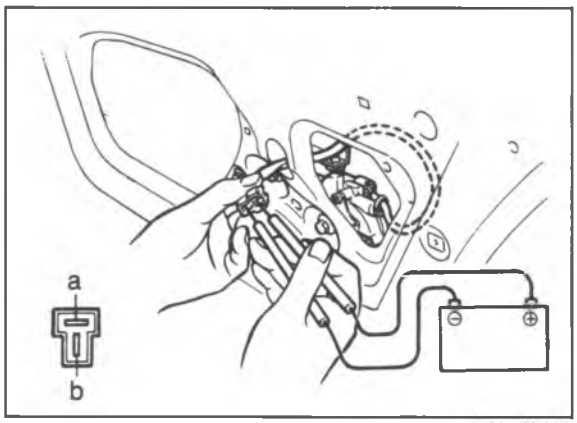

86U15X-121

Power Window Motor

1. Connect 12V to the "a" terminal and ground the "b" terminal of the motor connector, and check that the motor operates.
2. Reverse the above connections and check for reverse operation of the motor.

REMOTE CONTROL MIRROR

STRUCTURAL VIEW

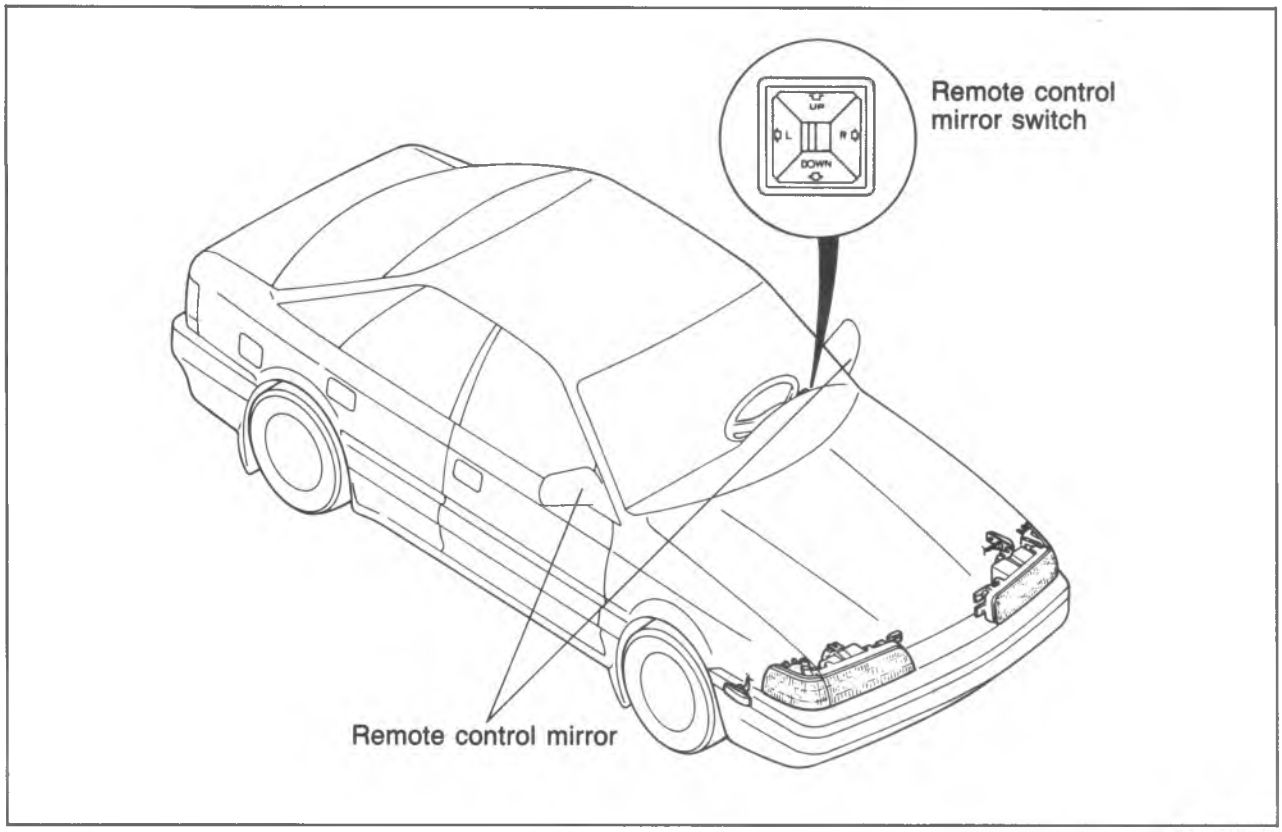

86U15X-122

CIRCUIT DIAGRAM

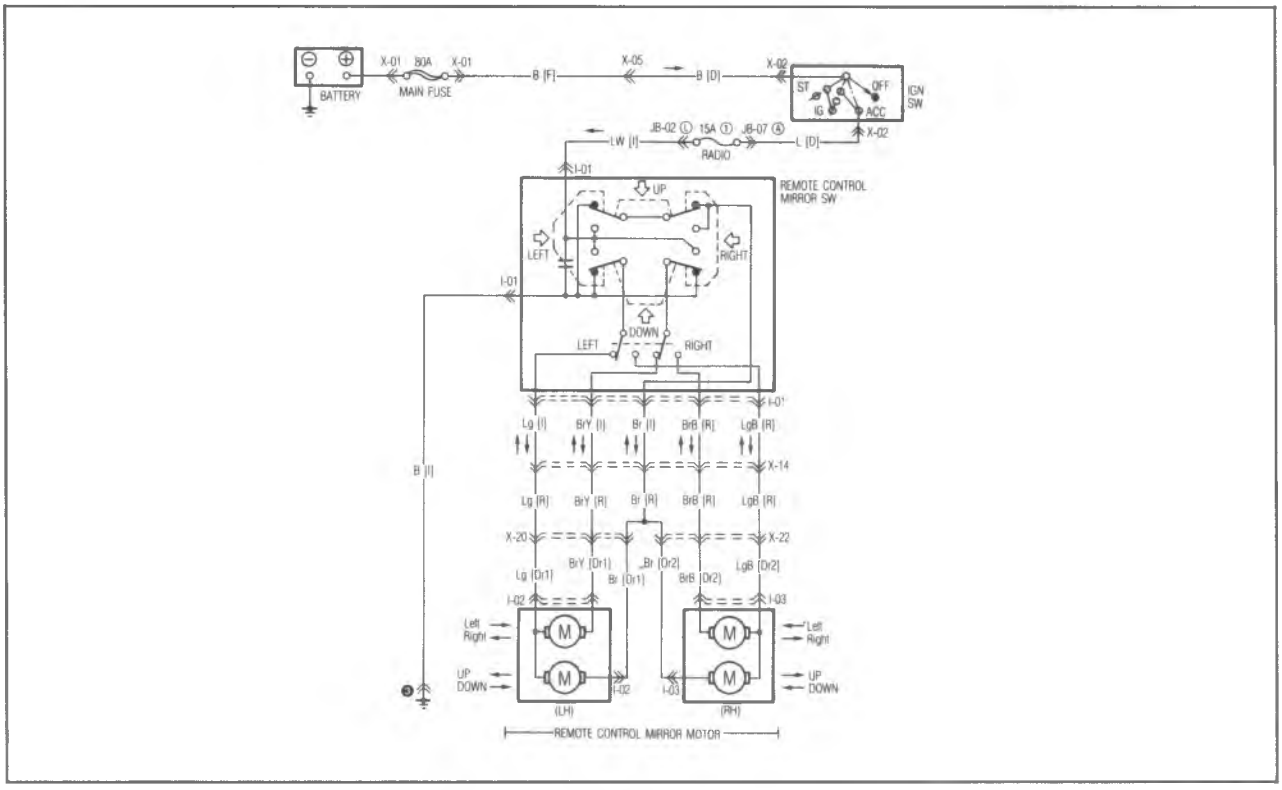

86U15X-123

TROUBLESHOOTING

Remote control mirrors do not operate.

Check the voltage between each terminal of the remote control mirror switch connector and a body ground with ignition switch in ACC.

Terminal	Voltage
G (LW)	12V
H (B)	0V

NG → Replace RADIO 15A fuse or repair the harness (Fuse box to switch, switch to body ground)

OK

Check the remote control mirror switch. Refer to following inspection.

NG → Replace the switch.

OK

Check for continuity between each terminals of the remote control mirror motor.

Terminal		
Br	Lg	BrY
○	○	○

○—○: indicate continuity

NG → Replace the motor.

OK

Repair the harness. (Switch to Motor)

86U15X-124

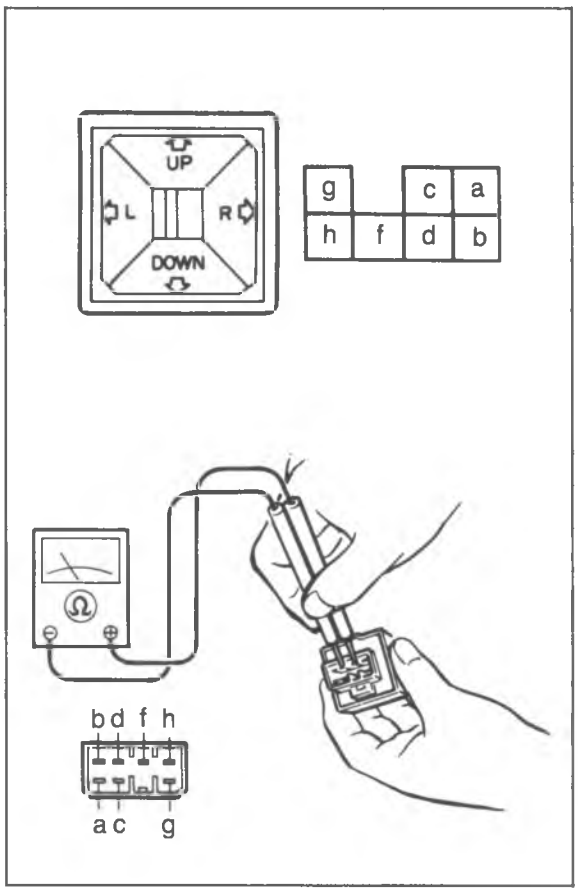

86U15X-125

INSPECTION

Remote Control Mirror Switch

1. Remove the negative battery cable.
2. Remove the remote control mirror switch.
3. Check for continuity between the terminals using an ohmmeter.

Position	Operation	g	h	a	b	f	d	c
Left	Up	○	○	○	○	○		
	Down	○	○	○	○	○		
	Left	○	○	○	○	○		
	Right	○	○	○	○	○		
Right	Up	○	○			○	○	○
	Down	○	○			○	○	○
	Left	○	○			○	○	○
	Right	○	○			○	○	○

○—○: Indicates continuity

4. If continuity is not as specified, replace the remote control mirror switch.

REAR WINDOW WIPER

STRUCTURAL VIEW

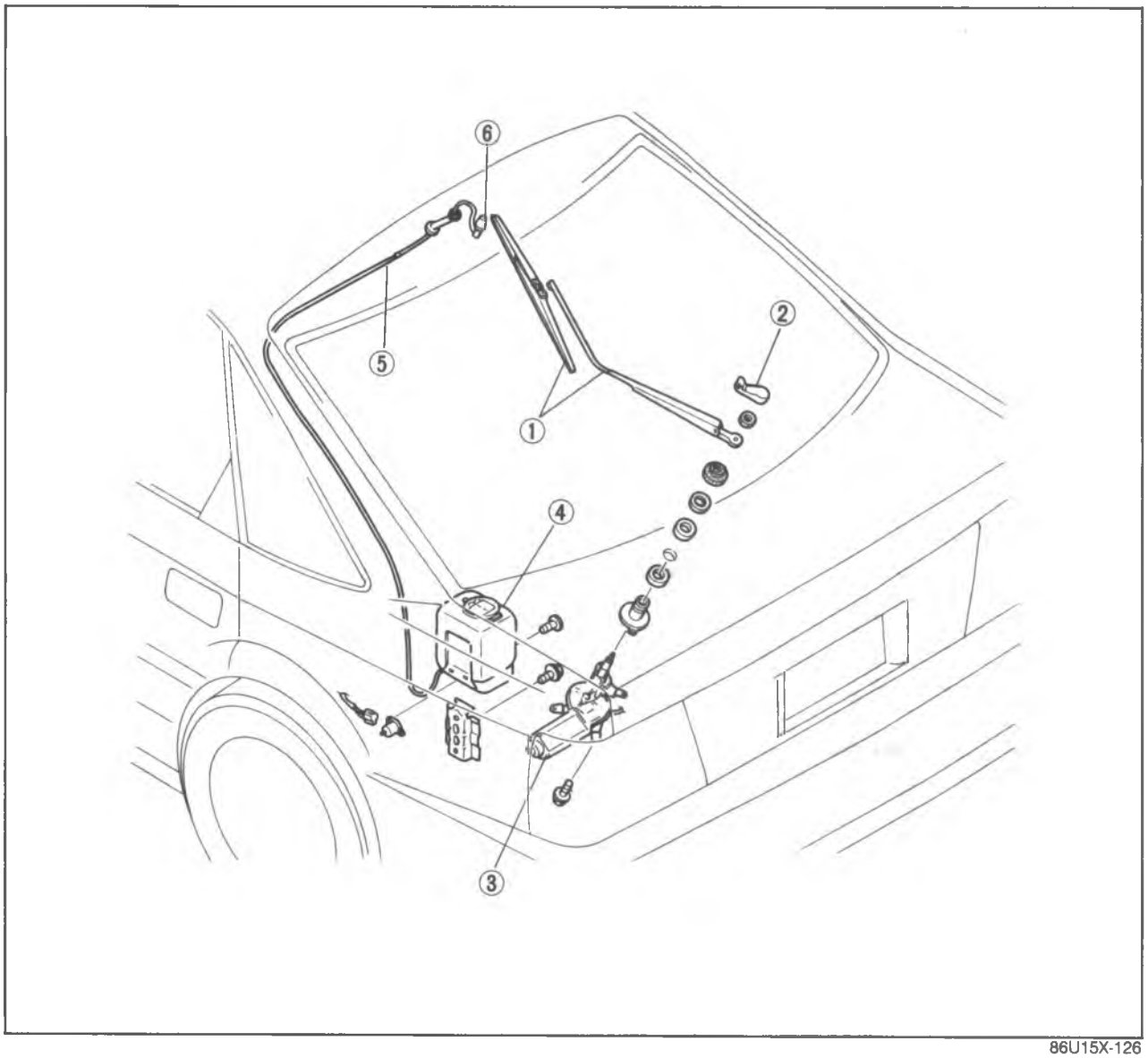

86U15X-126

1. Wiper arm and blade
2. Seal cap
3. Wiper motor
4. Washer tank and motor
5. Hose
6. Washer nozzle

CIRCUIT DIAGRAM

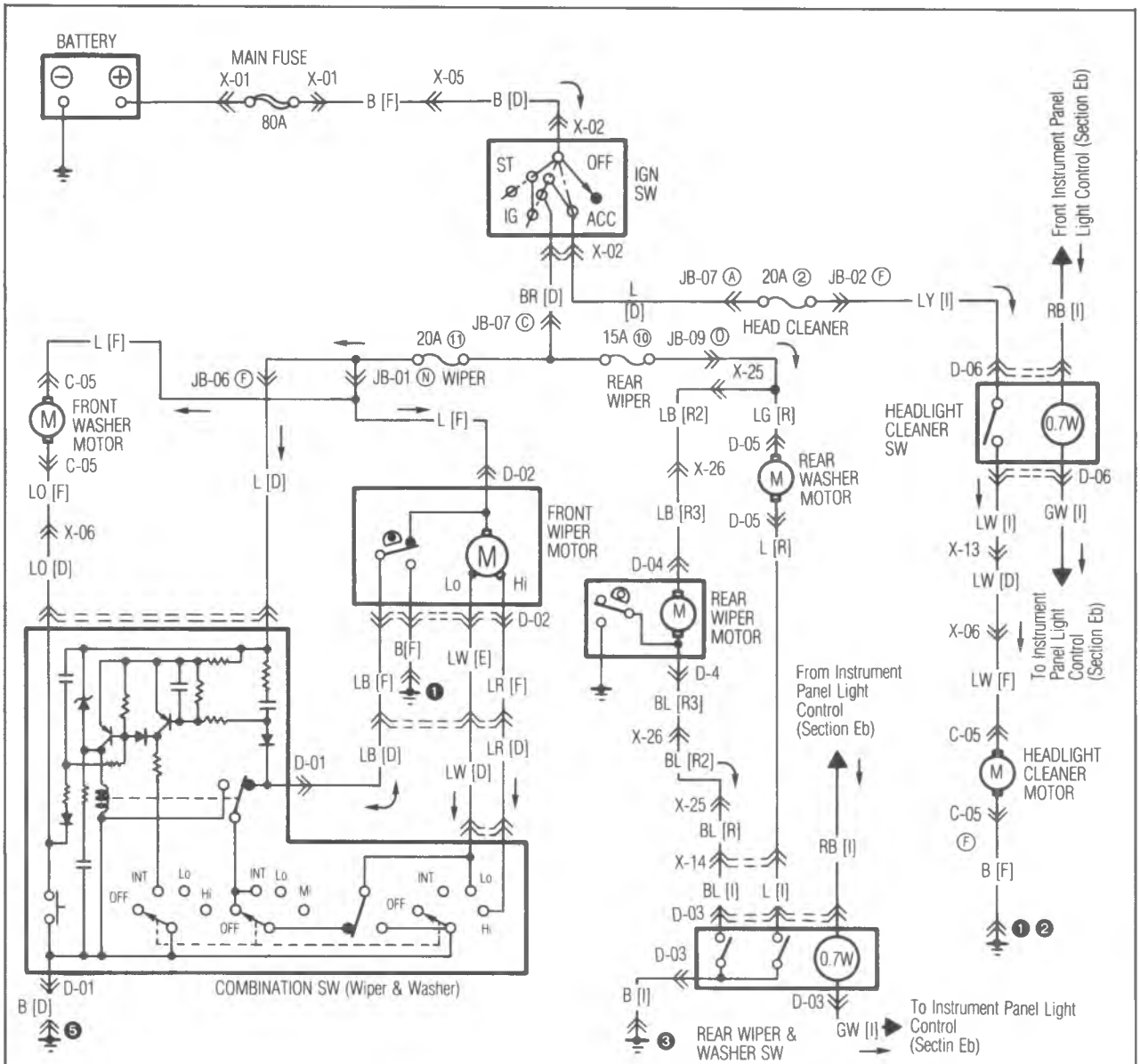

D-01 Combination Sw [D] LO L B LW LB LR	D-02 Front Wiper Motor [F] B LR LW ✳ LB L	D-03 Rear Wiper Sw [I] ✳ ✳ GW (5 Door) B L BL RB	D-04 Rear Wiper Motor [R3] LB BL (5 Door)
D-05 Rear Washer Motor [R] L LG (5 Door)	D-06 Headlight Cleaner Sw [I] LY RB LW GW	C-05 Washer Motor Assembly [F] LW LY L Ⓕ B Ⓓ B LO	

86U15X-127

TROUBLESHOOTING

Rear wiper does not operate.

Check REAR WIPER 10A fuse.
- NG → Short circuit.
- OK ↓

Turn ignition switch ON.

Check for 12V at LB terminal of rear wiper connector.
- NG → Repair the harness (Fuse box to rear wiper motor)
- OK ↓

Check for 12V at BL terminal of above connector.
- NG → Check motor. Refer to page 15—71.
- OK ↓

Check for 12V at BL terminal of rear wiper switch connector (5P).
- NG → Repair the harness (Rear wiper motor to switch)
- OK ↓

Disconnect the connector from switch.
Check for continuity between D (BL) terminal and H (B) terminal of the switch connector.
- NG → Repair the harness (Switch to body ground)
- OK → Check rear wiper switch.

86U15X-128

Rear wiper does not stop automatically. (Automatic stop function does not work)

Check continuity between motor body and ground.
- NG → Repair ground circuit of motor body
- OK → Check motor. Refer to page 15—71.

86U15X-129

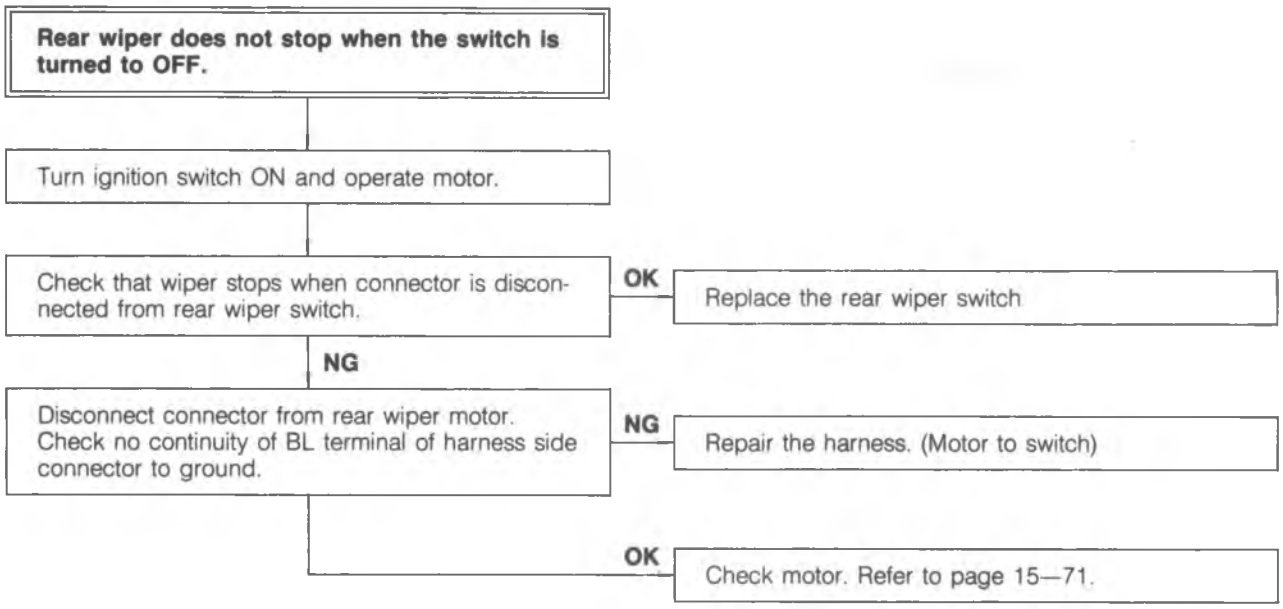

86U15X-130

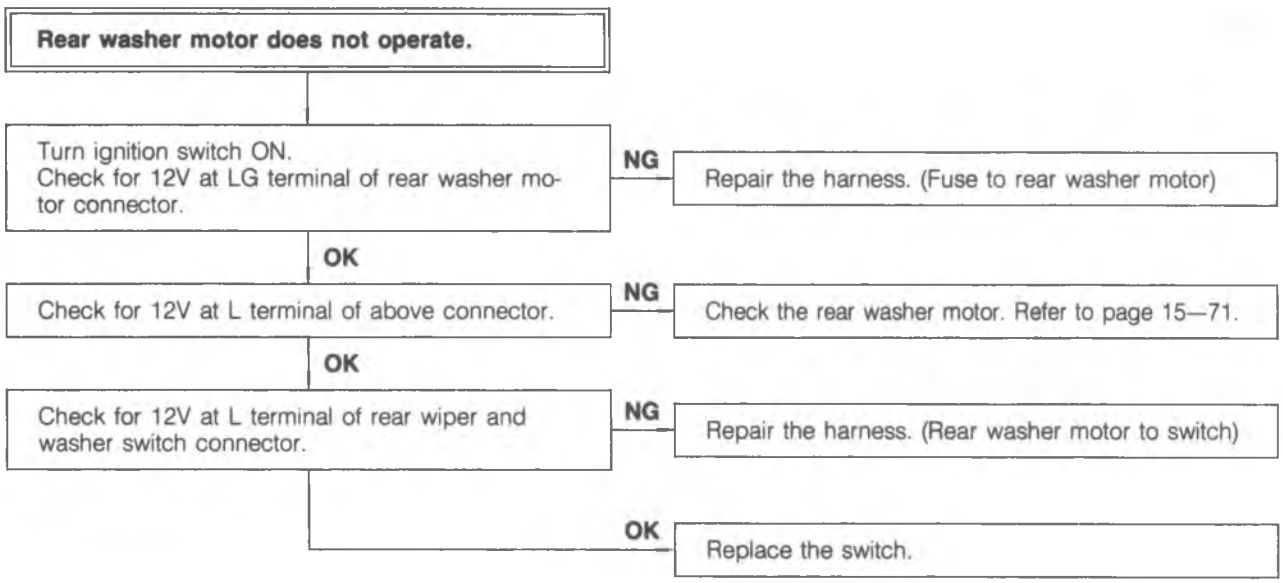

86U15X-131

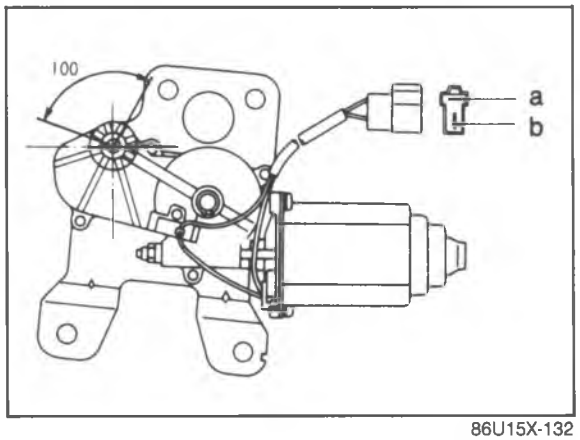

86U15X-132

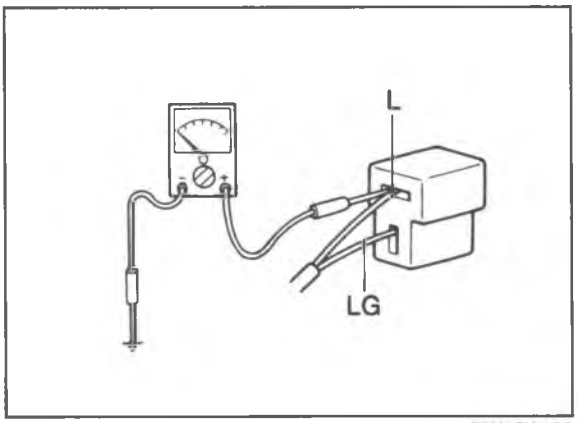

86U15X-133

INSPECTION

Operation Check of Rear Wiper Motor

1. Check that the motor operates continuously when 12V is connected to the (a) terminal and ground is connected to the (b) terminal of the motor.
2. Start the motor again.
   Disconnect the ground from the (b) terminal, and then connect the ground to the motor body immediately. Check that the motor shaft reaches the auto-stop position, and that there is conductivity through the grounding of the motor body.

   Note:
   Be sure to re-install the rubber seal correctly.

Operation Check of Rear Washer Motor

1. Using a voltmeter, measure the voltage between the (LG) terminal and a body ground with the ignition switch ON.
2. If no voltage, check the fuse or repair the harness.
3. If the (LG) terminal voltage is 12 V, connect the (L) terminal to a body ground.
4. If the washer motor does not operate, replace the washer motor.

WINDSHIELD WIPER

STRUCTURAL VIEW

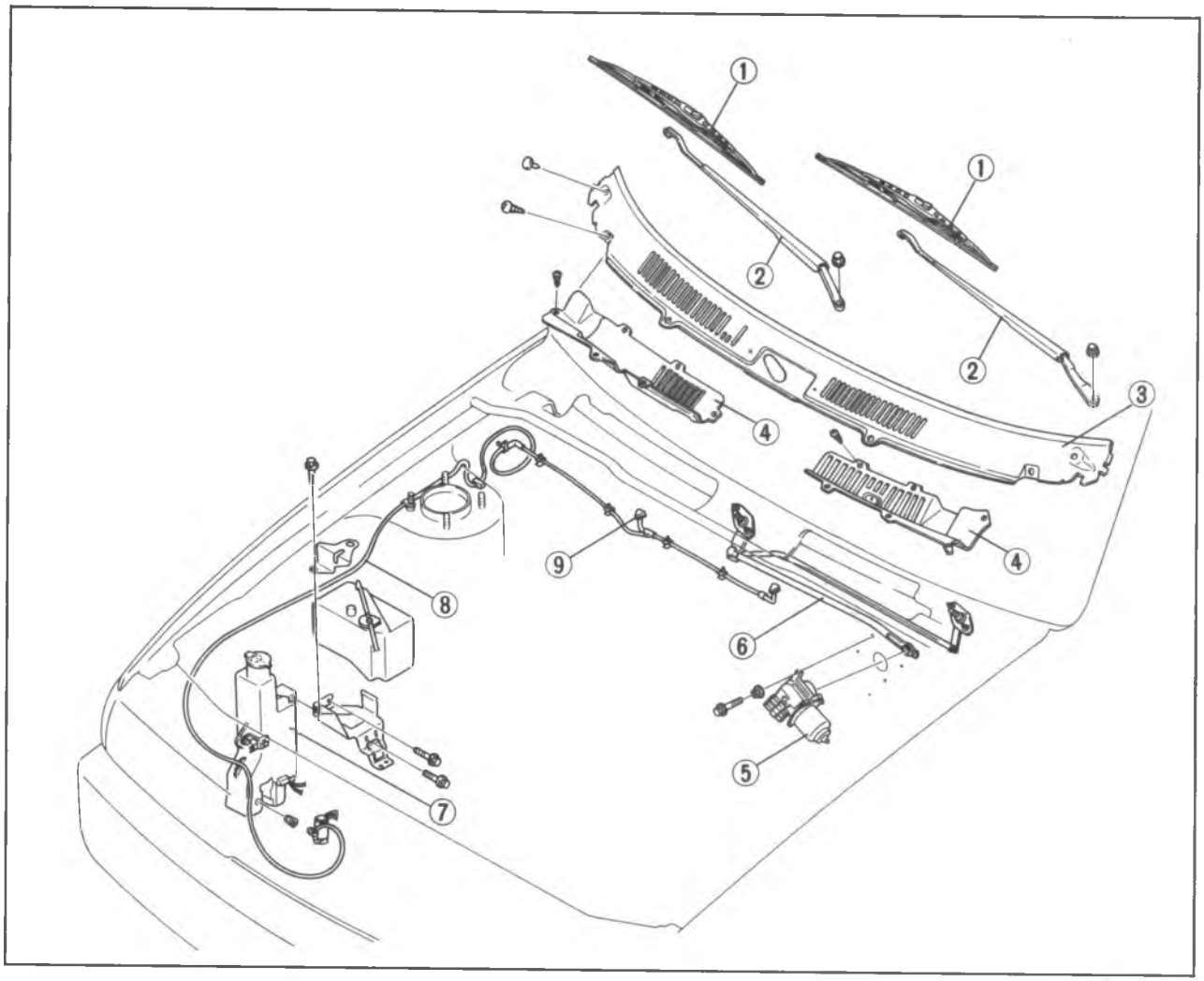

86U15X-134

1. Wiper blade
2. Wiper arm
3. Cowl grille
4. Cover
5. Wiper motor
6. Link assembly
7. Washer tank
8. Nozzle hose
9. Washer nozzle

CIRCUIT DIAGRAM

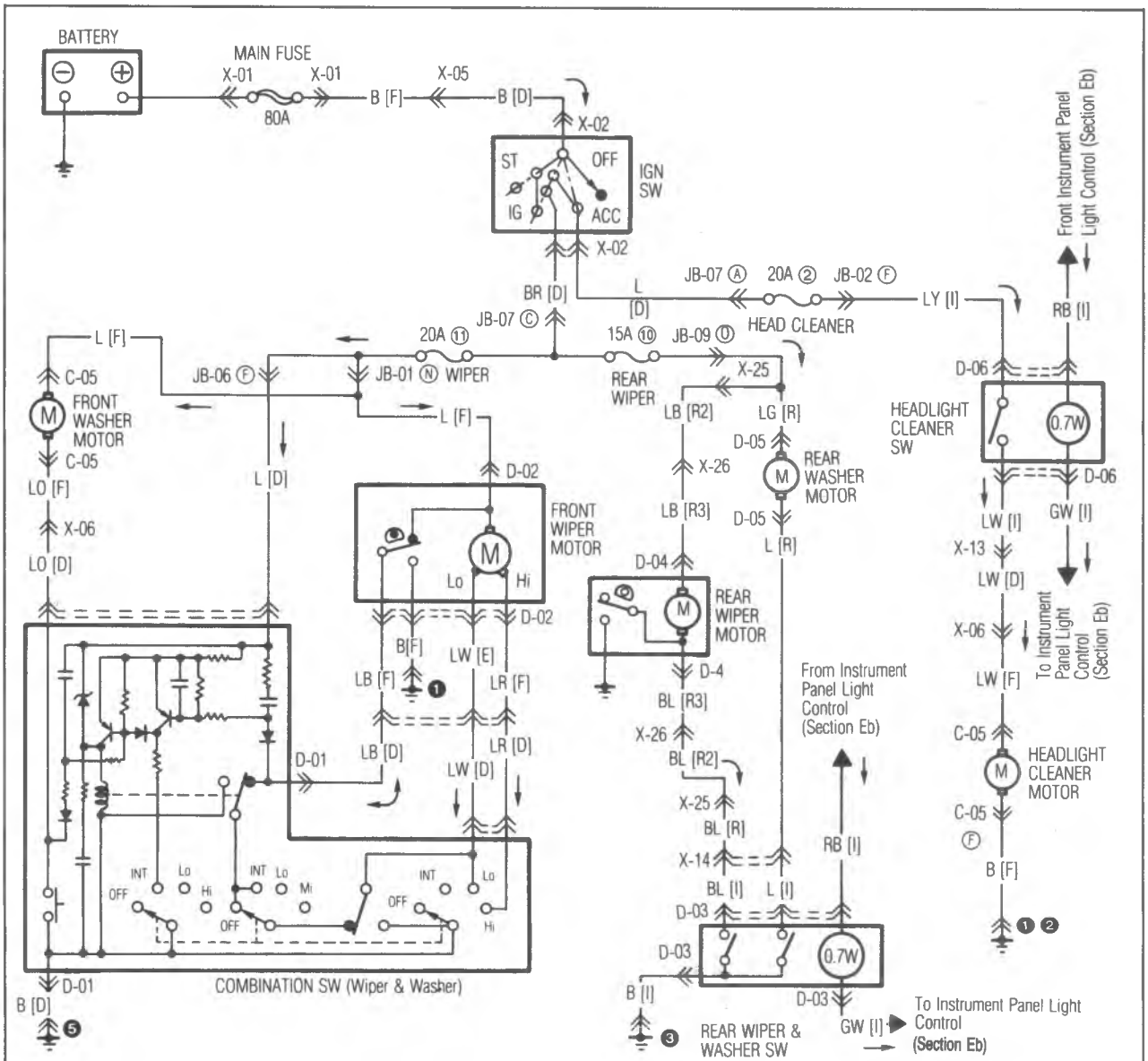

D-01 Combination Sw [D]	D-02 Front Wiper Motor [F]	D-03 Rear Wiper Sw [I]	D-04 Rear Wiper Motor [R3]
LO L B / LW LB LR	B LR LW / ✳ LB L	✳ ✳ GW (5 Door) / B L BL RB	LB BL (5 Door)
D-05 Rear Washer Motor [R]	**D-06 Headlight Cleaner Sw [I]**	**C-05 Washer Motor Assembly [F]**	
L LG (5 Door)	LY RB / LW GW	LW LY L / Ⓕ B Ⓑ B LO	

86U15X-135

TROUBLESHOOTING

Wiper does not operate in Lo or Hi position.

Check WIPER 15A fuse
- NG → Short circuit
- OK ↓

Turn ignition switch ON.

Check for 12V at L terminal of front wiper motor connector.
- NG → Repair the harness. (Fuse box to wiper motor)
- OK ↓

Check that motor operates in low speed when LW terminal is grounded.
- NG → Check the wiper motor. Refer to page 15—77.
- OK ↓

Check that motor operates in high speed when LR terminal is grounded.
- NG → Check the wiper motor. Refer to page 15—77.
- OK ↓

Disconnect 6P connector from combination switch. Check that motor operates in low speed when harness side LW terminal is grounded.
- NG → Repair the harness. (Combination switch to wiper motor)
- OK ↓

Check that motor operates in high speed when harness side LR terminal of above connector is grounded.
- NG → Repair the harness. (Combination switch to wiper motor)
- OK ↓

Check for conductivity between B terminal and a body ground.
- NG → Repair the harness. (Combination switch to body ground)
- OK → Check the combination switch. Refer to page 15—13.

86U15X-136

Wiper automatic function does not work.

Turn ignition switch ON.

Check for 12V at LB terminal of wiper motor connector.

NG → Check the wiper motor. Refer to page 15—77.

OK

Check for 12V at LB terminal of combination switch connector.

NG → Repair the harness. (combination switch to wiper motor)

OK

Check the combination switch

86U15X-137

Intermittent function does not operate.

Disconnect 6P connector from combination switch and check for 12V at L terminal of harness side connector.

NG → Repair the harness. (Fuse box to Combination switch)

OK

Check combination switch. Refer to page 15—13.

86U15X-138

One touch function does not operate.
Wiper does not operate when washer is in operation.

→ Check combination switch. Refer to page 15—13.

86U15X-139

Wiper continues to operate at low speed while switch is OFF.

Check that the wiper stops when combination switch connector is disconnected

NG → Check the front wiper motor. Replace if necessary. Refer to page 15—77.

OK → Repair the harness. (Motor to switch)

OK → Check the combination switch. Replace if necessary. Refer to page 15—13

86U15X-140

Wiper continues to operate in high speed while switch is OFF.

Check that wiper stops when combination switch connector is disconnected.

OK → Check the combination switch. Refer to page 15—13.

NG → Repair the harness. (Motor to switch)

86U15X-141

Washer does not operate (Wiper operates OK).

Check for 12V at L terminal of washer motor connector.

NG → Repair the harness. (Fuse box to washer motor)

OK

Check for 12V at LO terminal of washer motor connector.

NG → Check the washer motor. Refer to page 15—77.

OK

Check that motor operates when E (LO) terminal of combination switch connector is grounded.

NG → Repair the the harness. (Washer motor to combination switch)

OK → Check the combination switch. Refer to page 15—13.

86U15X-142

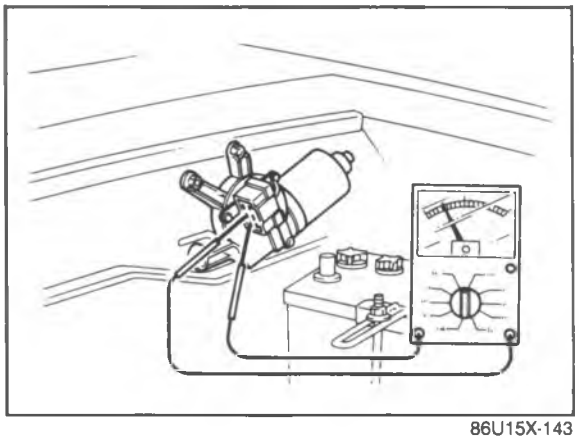

86U15X-143

INSPECTION

Wiper Motor

Check for continuity between the terminals when wiper in normal resting position.

Terminals	Continuity
L—LW	Yes
L—LR	Yes
L—LB	Yes
B—LB	No

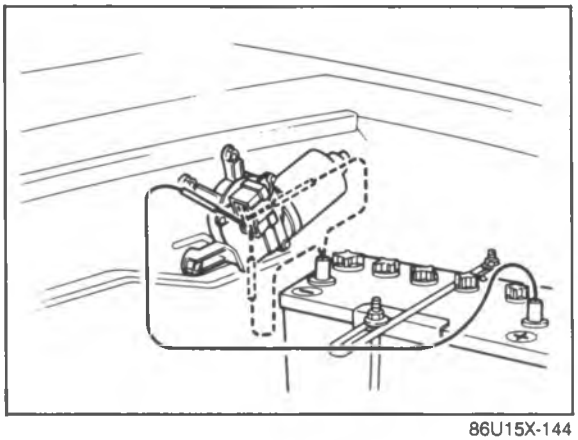

86U15X-144

Checking Operation

Check the operation by applying 12V between each terminal of the motor connector.

Terminal		Operation speed
12V	Ground	
b	a	Low
	c	High

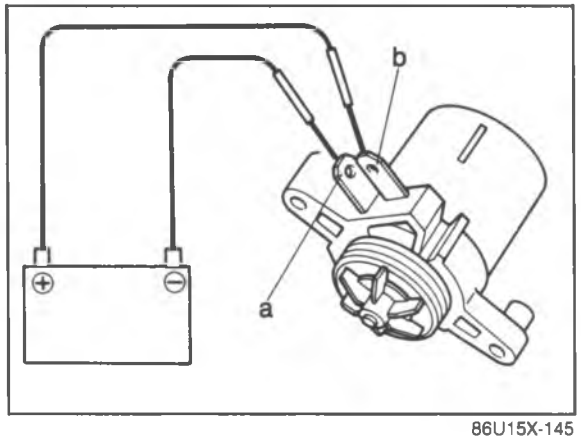

86U15X-145

Washer Motor

1. Check for continuity of the motor with an ohmmeter.
2. Connect 12V to the "b" terminal and the ground to the "a" terminal, and check that the motor operates.

CRUISE CONTROL SYSTEM

STRUCTURAL VIEW

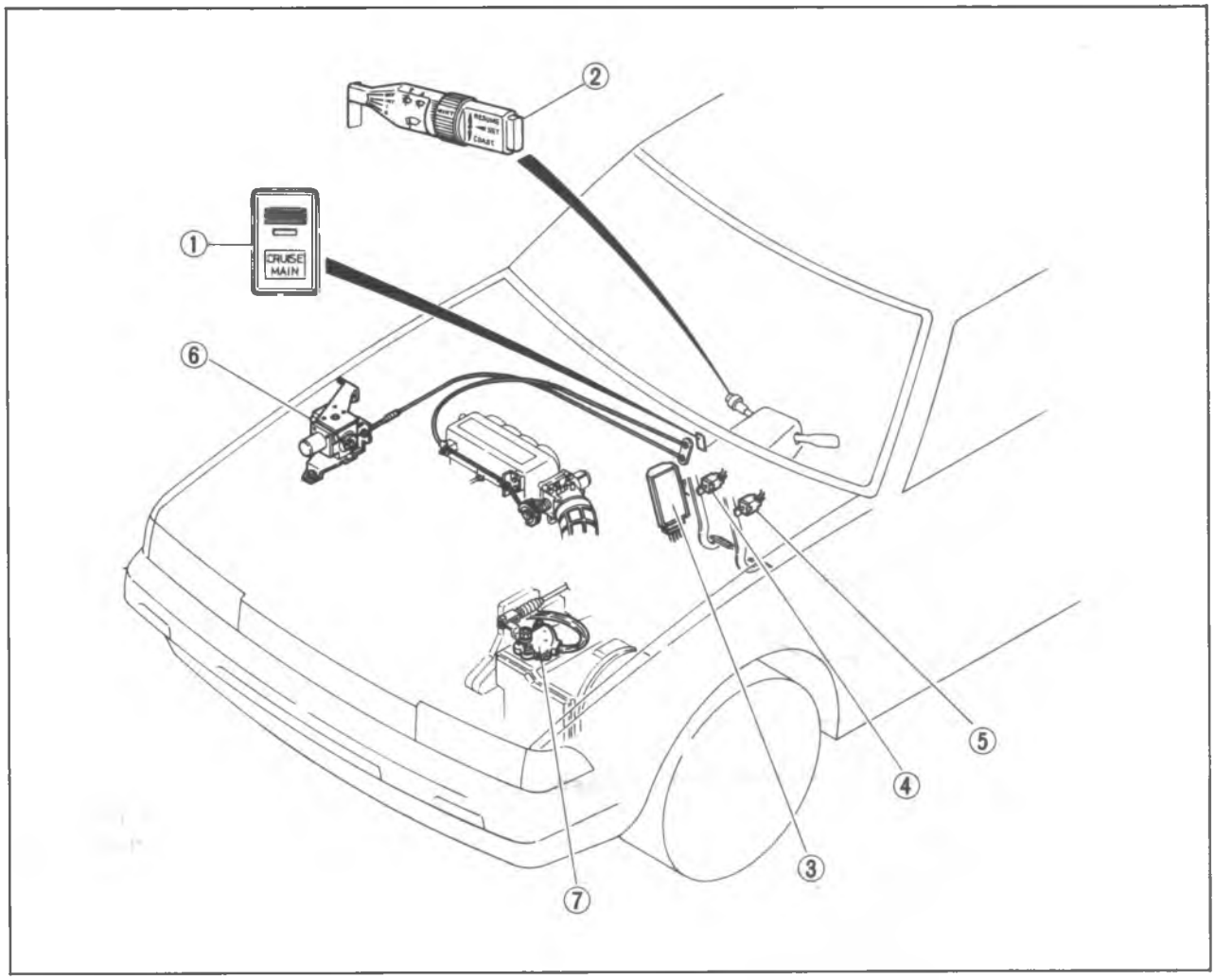

86U15X-146

1. Main switch
2. Control switch
3. Control unit
4. Stop switch
5. Clutch switch (MTX)
6. Actuator
7. Inhibitor switch (ATX)

CIRCUIT DIAGRAM

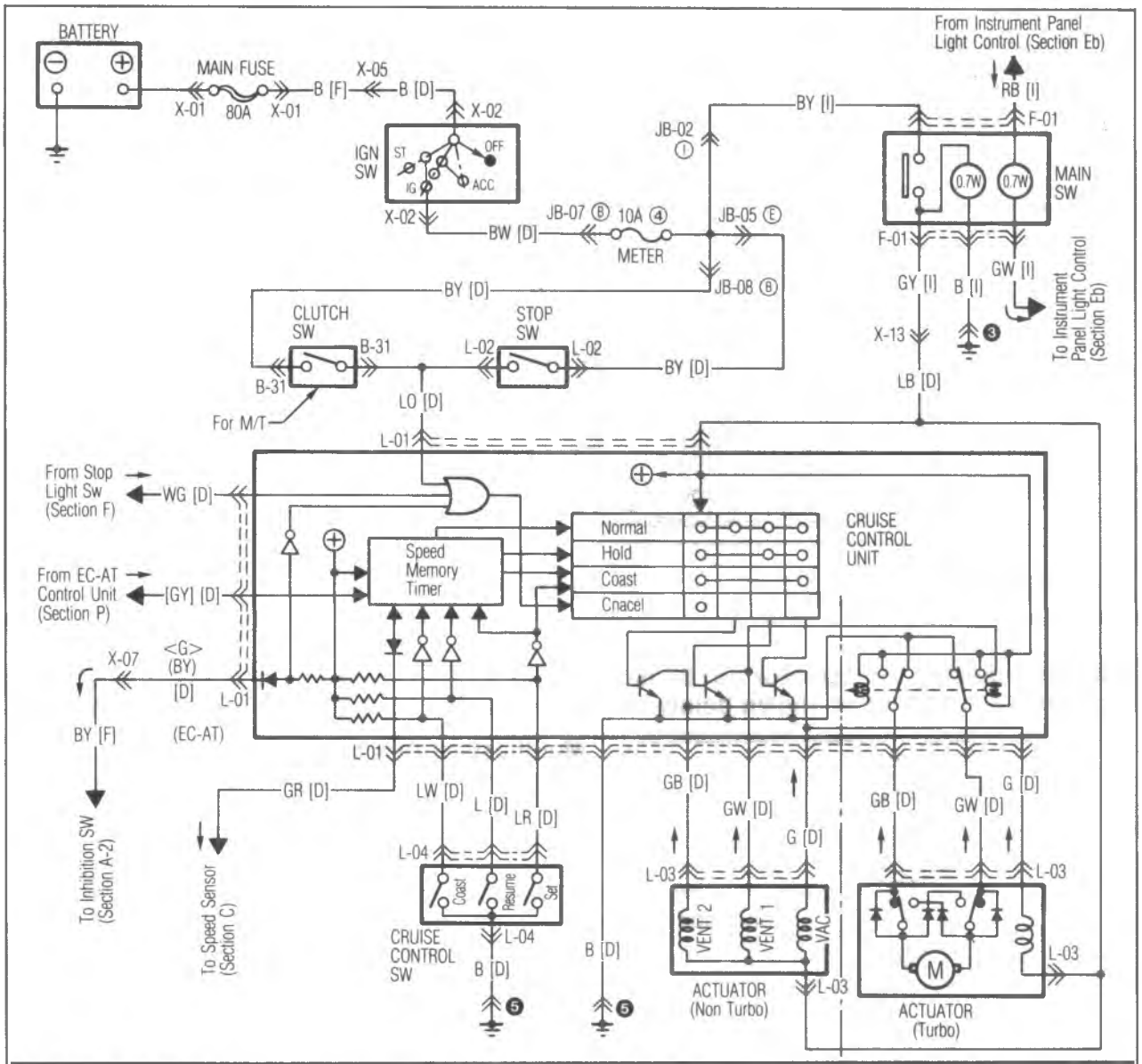

L-01 Cruise Control Unit [D]	L-02 Stop Sw [D]	L-03 Actuator [D]
B L LW LO G GW / WG [GY] LR GR LB (BY) <G> GB; [ ] EC-AT; < > EC-AT with Theft-deterrent; ( ) EC-AT without Theft-deterrent	BY LO	* LB G / * GW GB
L-04 Cruise Control Sw [D]	**L-05 Main Sw [I]**	**B-28 Clutch Sw [D]**
L LW / B LR	* RB / GY BY B GW	LO BY / LgB RG

86U15X-147

ON-VEHICLE INSPECTION (USING ACC CHECKER 49 9200 010)

Note:

1. The ACC checker (49 9200 010) cannot be used for checking the actuator on turbo models. Therefore the actuator of the turbo model should be inspected as a unit.

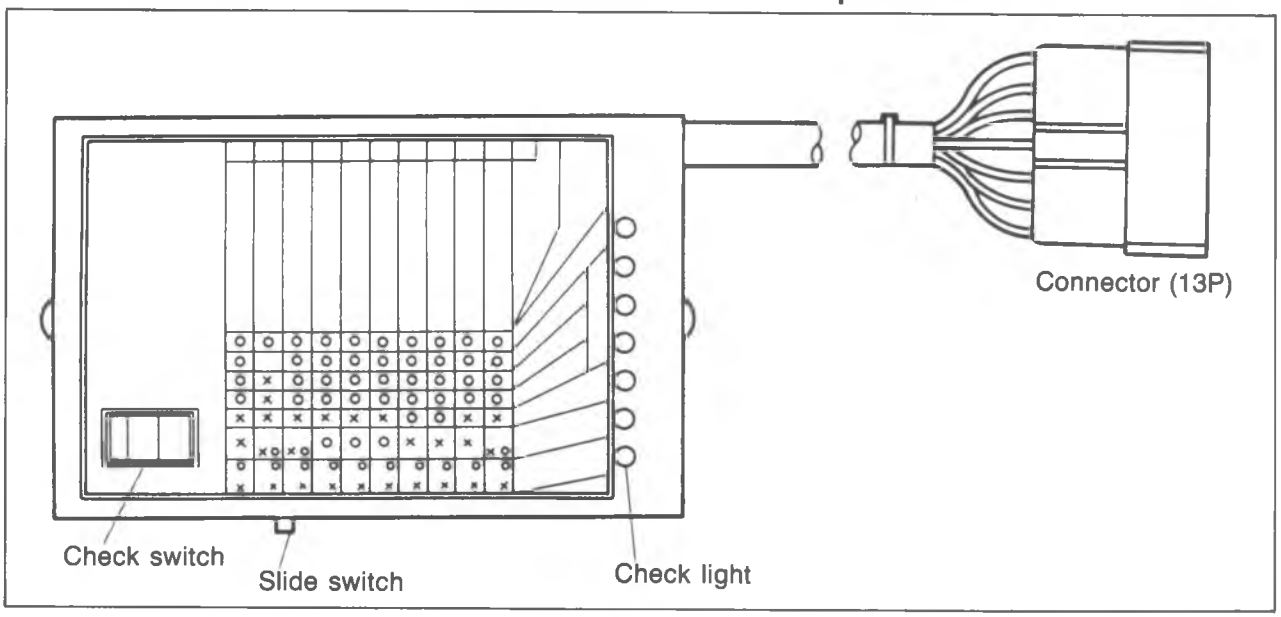

76U15X-192

2. When checking the actuator on '87 models with EC-AT using this checker, the checker should be modified as shown below in order to avoid damage of the EC-AT control unit.

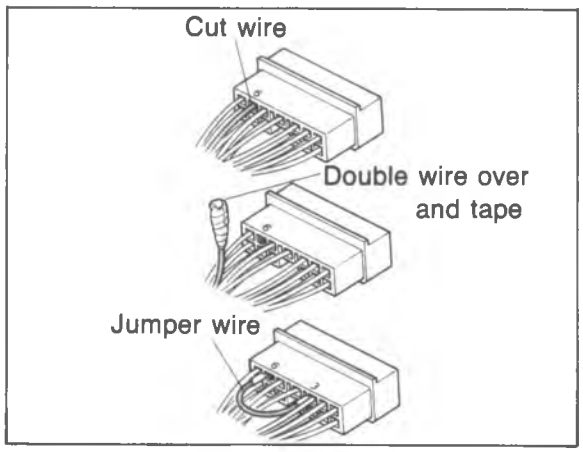

Modification Procedure

1. Cut the wire at terminal no.6 indicated on ACC checker connector.
2. Tape exposed end of wire cut in step 1 as shown.

This modification does not affect the usage of the ACC checker except when used on the '81 RX-7 and 626 models. When the modified ACC checker is used on these models, use a jumper wire and jump across terminal no.6 to 3 indicated on ACC checker connector as shown.

Function of the ACC CHECKER

A. Check lights

Each item is verified by a check light, as described below.

Check light	Check Items
MAIN SW.	Ignition switch, fuse, main switch and associated wiring harness terminals and connectors.
ACTUATOR—VAC	VAC coil continuity in the actuator and associated harness.
ACTUATOR—VENT 2	VENT 2 coil continuity in the actuator and associated harness.
ACTUATOR—VENT 1	VENT 1 coil continuity in the actuator and associated harness.
CLUTCH/BRAKE SW.	Clutch switch (M/T vehicles only), brake switch and associated harness
COMBINATION/INH. SW.	"SET", "COAST" and "RESUME" positions in the combination switch, inhibitor switch (A/T vehicles only), and associated harness.
GENERATOR	Speed sensor output and associated harness.

76U15X-193

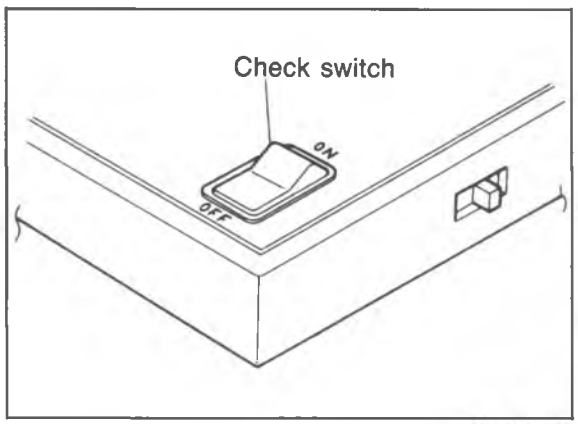

76U15X-194

B. Check Switch (for non-turbo model)

The check switch in the ACC checker is used to check the actuator operation while the engine is running. When the check switch is held on after the engine is started, the engine speed increases to approximately 2,000 to 3,000 rpm and is maintained at that level. When the check switch is released, the engine speed decreases to idle speed.

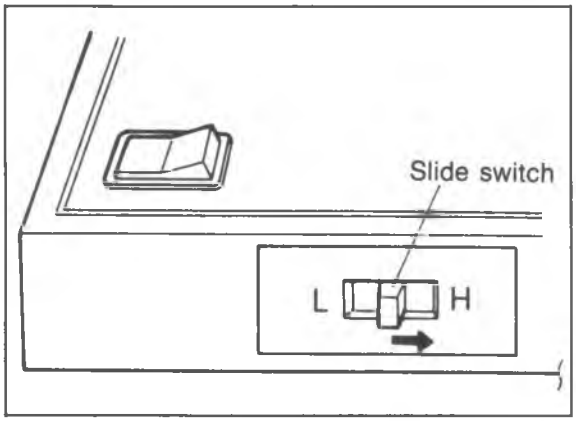

76U15X-319

C. Slide switch

Before using the check switch, first move the slide switch to the "L" position.

Then use the check switch to increase the engine rpm.

If the engine rpm stabilizes after increasing to 2,000 ~ 3,000 rpm, there is no problem. If there is no increase at all, or only a slight increase, try again after setting the slide switch to the "H" position. If there is still no increase to 2,000 ~ 3,000 rpm, adjust the free play of the actuator inner cable.

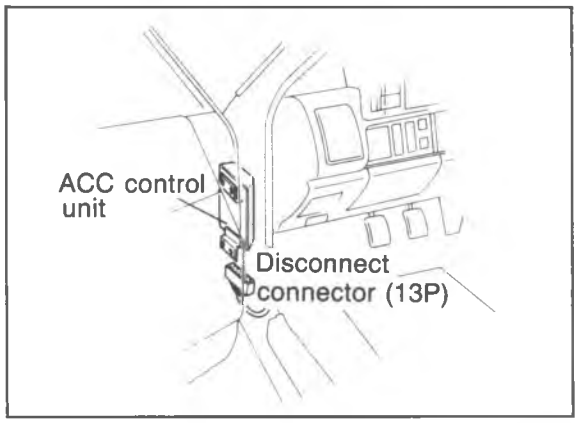

76U15X-320

Preparation

1. ACC checker installation

Depress the lock hook of the harness connector. Remove the connector from the ACC control unit after the ignition switch and main switch are turned off, and then connect the harness connector to the ACC checker.

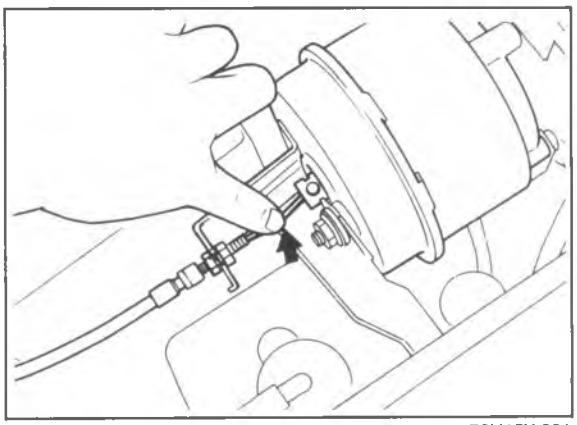
76U15X-321

2. Checking the free play of the actuator inner cable

Remove the clip and adjust the nut so that the actuator control cable play is as follows when the cable is pressed lightly.

Standard play: 1—3 mm (0.039—0.118 in)

Checking the System

Check table

O: Represents: Light ON
X: Represents: Light OFF

CHECK ITEMS AND CONDITIONS	CHECK LIGHTS (correct response)							TROUBLESHOOTING (INCORRECT RESPONSE)
		ACTUATOR						
	MAIN SW	VAC	VENT2	VENT1	CLUTCH/BRAKE SW	CONBINATION/INH SW	GENERATOR	
1. MAIN SW. CONTINUITY: • Ignition switch ON • Main switch ON	O	O	O	O	X	A/T O M/T X	O or X	ALL LIGHTS OFF: Check ignition switch, main switch, fuse, and associated harness terminals and connectors
2. INHIBITOR SW. CONTINUITY: • Ignition and main switch ON. • Shift lever to "D" (A/T) • Depress brake pedal	O	O	O	O	X	X	O or X	COMBINATION/INH. SW. LIGHT ON: Check inhibitor switch and associated harness.
3. BRAKE SW. CONTINUITY: • Ignition and main switch ON • Shift lever to "D" (A/T) • Depress brake pedal	O	O	O	O	O	X	O or X	CLUTCH/BRAKE SW.LIGHT OFF: Check brake switch and associated harness.
4. CLUTCH SW. CONTINUITY: • Ignition switch ON • Main switch ON • Depress clutch pedal	O	O	O	O	O	X	O or X	CLUTCH/BRAKE SW. LIGHT OFF: Check clutch switch and associated harness.
5. "SET" POSITION OF COMBINATION SWITCH: • Ignition switch ON • Main switch ON • Shift lever to "D" (A/T) • Push to "SET" position of combination switch	O	O	O	O	X	O	O or X	COMBINATION/INH. SW. LIGHT OFF: Check "SET" position of combination switch and associated harness.
6. "COAST" POSITION OF COMBINATION SWITCH • Ignition switch ON • Main switch ON • Shift lever to "D" (A/T) • Turn to "COAST" position of combination switch	O	O	O	O	X	O	O or X	COMBINATION/INH. SW. LIGHT OFF: Check "COAST" position in combination switch and associated harness.
7. "RESUME" POSITION OF COMBINATION SWITCH • Ignition switch ON • Main switch ON • Shift lever to "D" (A/T) • Turn to "RESUME" position of combination switch	O	O	O	O	X	O	O or X	COMBINATION/INH. SW. LIGHT OFF: Check "RESUME" position of combination switch and associated harness.

76U15X-198

CHECK ITEMS AND CONDITIONS	CHECK LIGHTS (correct response)							TROUBLESHOOTING (INCORRECT RESPONSE)
		ACTUATOR						
	MAIN SW	VAC	VENT2	VENT1	CLUTCH/BRAKE SW	COMBINATION/INH SW	GENERATOR	
8. START THE ENGINE • Shift lever to "N" position (A/T)	○	○	○	○	X	A/T ○ M/T X	○ or X	—
9. ACTUATOR OPERATION: (EGI model only) • After engine is started, set the slide switch "L" or "H". Then turn on check switch (keep in "D" position) **Note: Engine speed should increase to 2,000—3,000 rpm. If over 4,000 rpm release the switch immediately.**	○	X ↓ ○	X	X	X	A/T ○ M/T X	○ or X	If engine speed does not come up to and remain in the 2,000 to 3,000 rpm. range, check the actuator and associated harness.
10. SPEED SENSOR OUTPUT Keeping idling condition, drive vehicle slowly.	○	○	○	○	X	X	○ ↕ X	If GENERATOR LIGHT does not flash, trouble may be with speed sensor and associated harness.

76U15X-199

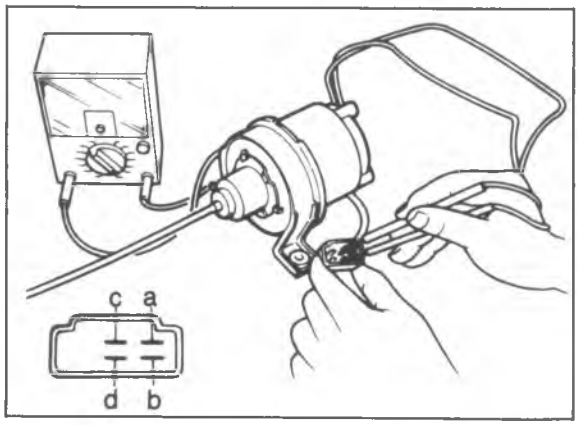

76U15X-322

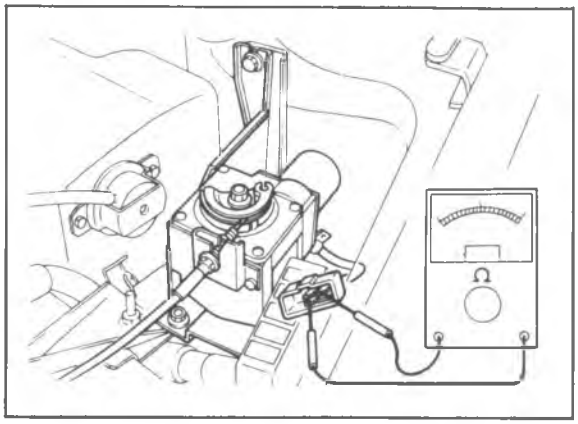

76U15X-201

INSPECTION

Actuator
Non-turbo model

Measure the actuator solenoid resistance by using an ohmmeter.

Check terminals	Resistance
c — d	Approx. 25 to 35 ohms
c — a	
c — b	

Turbo model

1. Measure the actuator clutch solenoid resistance by using an ohmmeter.

Check terminal	Resistance
c — a	Approx. 20 ohms

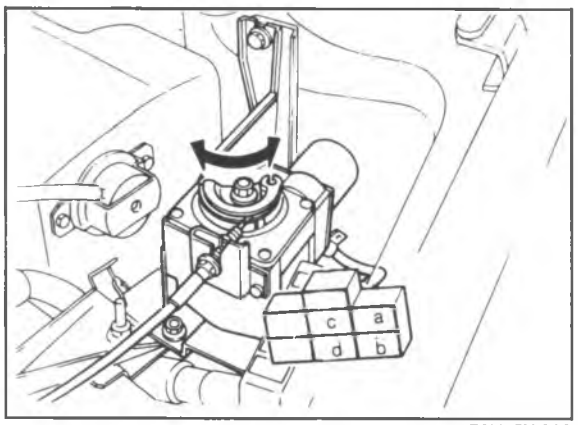

76U15X-323

2. Connect battery power and ground as follows, and check the operation of control cable.

Terminal condition				Operating condition of control cable
a	b	c	d	
Ground	Power	Power	Ground	Pull
Ground	—	Power	—	Stop
Ground	Ground	Power	Power	Extend
—	—	—	—	Release

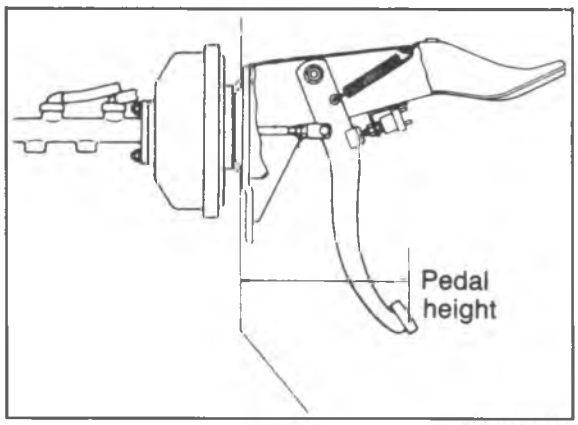

76U15X-203

Cruise Control Unit
If there is an operation malfunction of the cruise control system, and no abnormal condition when checking above, replace the cruise control unit and check system operation.

Clutch Switch, Brake Switch
When removing these switches, turn each of them so that the corresponding pedal height agrees with the standard value.

Brake pedal height: 214 mm (8.42 in)
Clutch pedal height: 214 mm (8.42 in)

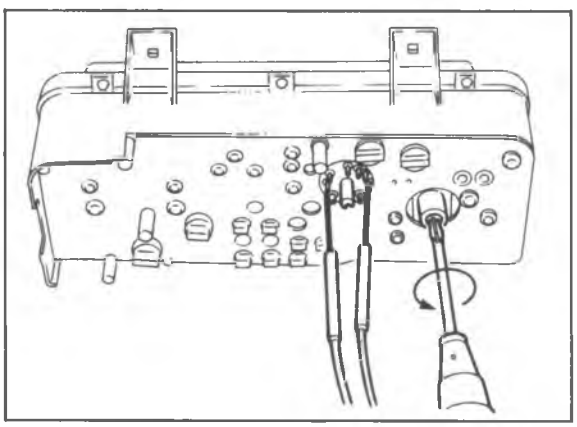
76U15X-204

Speed sensor
1. Remove the combination meter.
2. Connect an ohmmeter between a_1 and a_7 terminals.
3. Confirm continuity between terminals when rotating the speedometer cable shaft.
4. If not 4 times per rotation, replace the speedometer.

Inhibitor switch
Refer to Section 7B.

SLIDING SUNROOF

STRUCTURAL VIEW

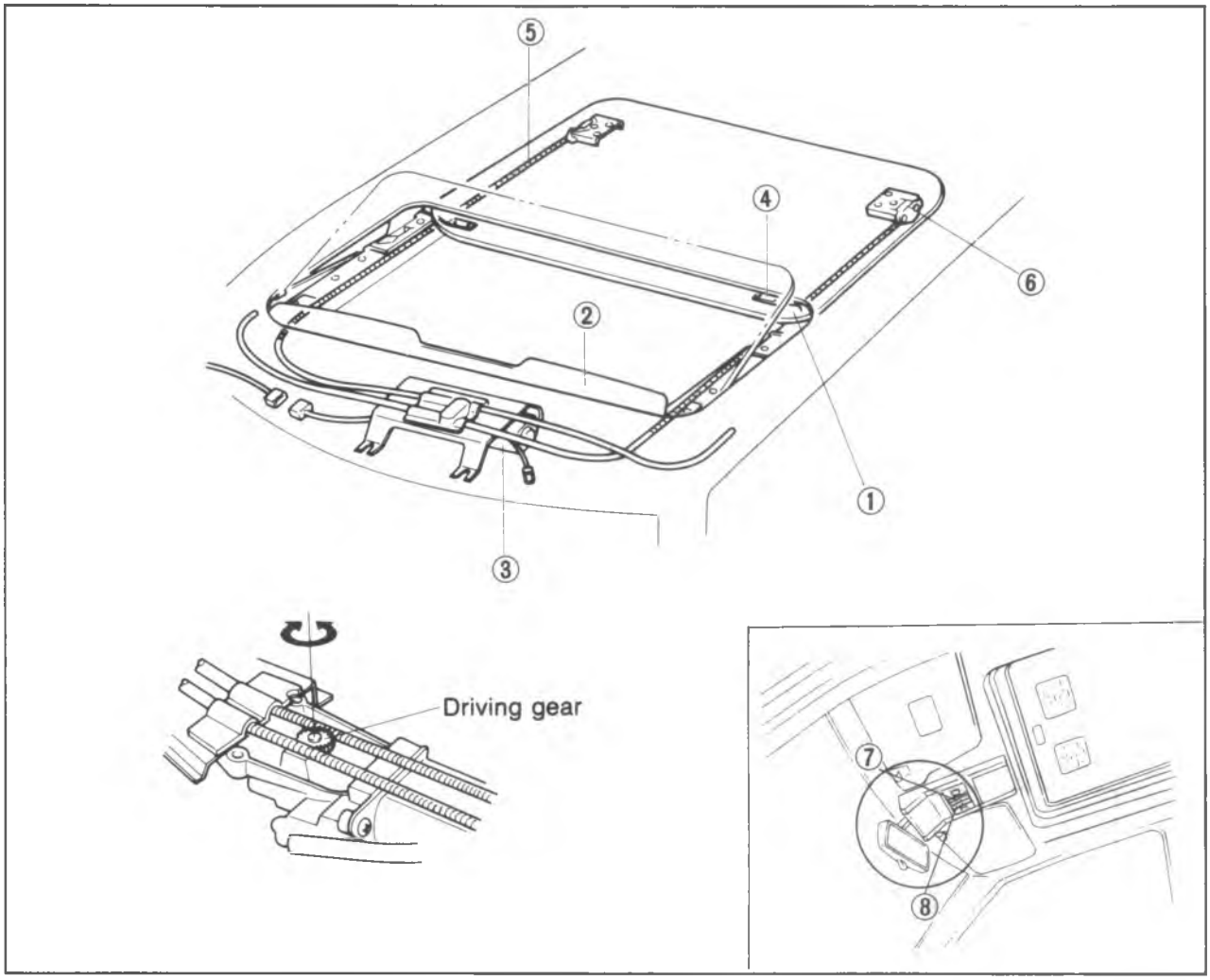

86U15X-148

1. Slide panel
2. Deflector assembly
3. Motor assembly
4. Guide bracket
5. Driving cable
6. Guide bracket assembly rear
7. Tilt up switch
8. Slide switch

CIRCUIT DIAGRAM

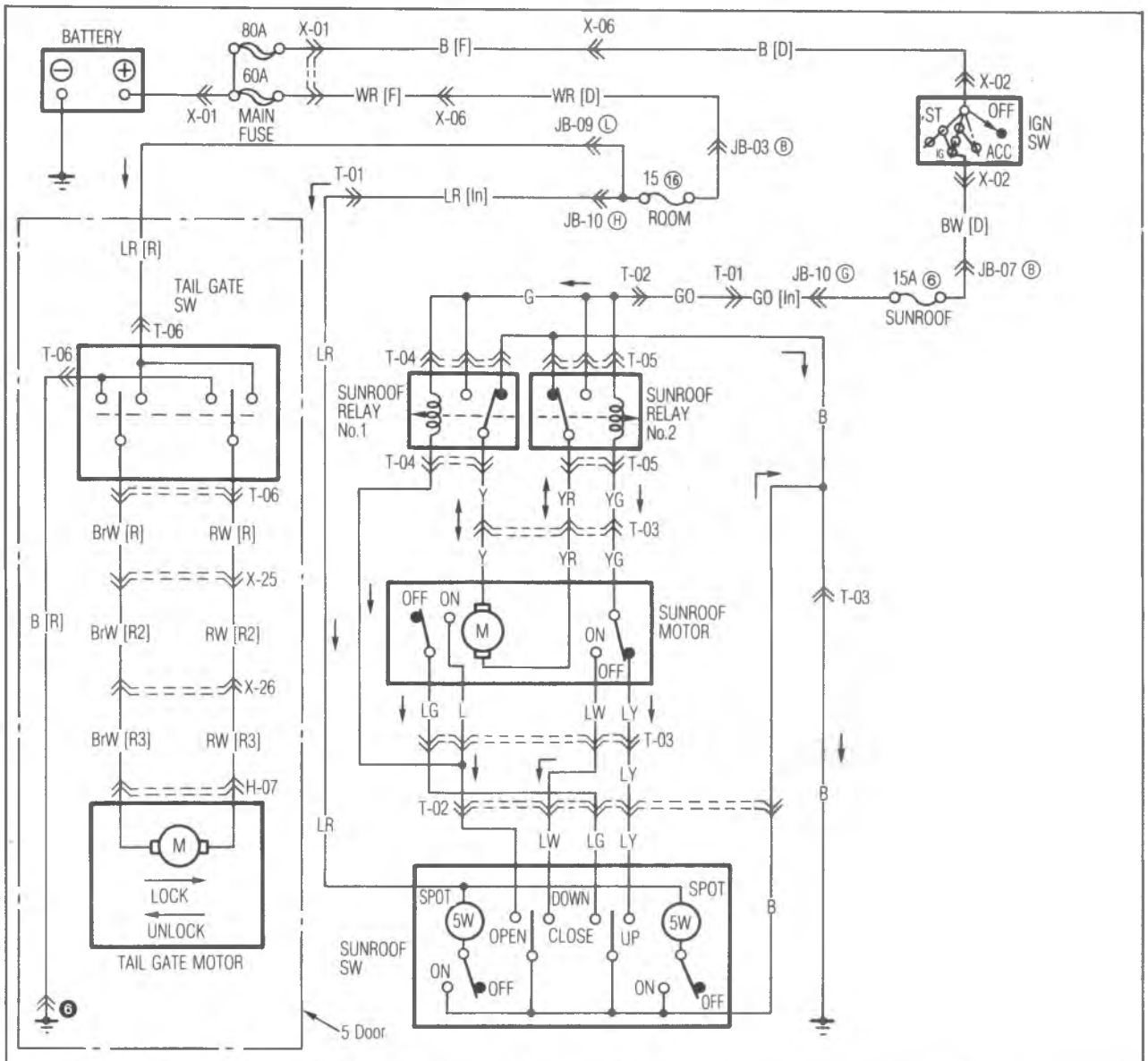

T-01 Connector Between Interior Light Harness [In] and Sunroof	T-02 Sunroof Sw	T-03 Sunroof Motor	
[In] GO LR / GO LR	LG LW G / B L LY; GO LW LG / LY L B	Y L LY YG / YR B LG LW	YG LY L Y / LW LG B YR
T-04 Sunroof Relay No.1	**T-05 Sunroof Relay No.2**	**T-06 Tail Gate Sw [R]**	**H-07 Luggage Sw & Tail Gate Moter [Dr3]**
G Y G / B ✕ L	G YR G / B ✕ YG	BrW LR / B RW — 5 Door	RW Br / LR R — 5 Door

86U15X-149

TROUBLESHOOTING

Sunroof does not operate correctly.

Check SUNROOF 15A fuse.

Turn ignition switch ON

Check the voltage at each terminal of the sunroof relay No. 1 and No. 2.

Relay	Terminal	Voltage
No. 1	G	12V
	G	12V
	B	0V
No. 2	G	12V
	G	12V
	B	0V

NG → Repair the harness. (Fuse box to relay, Relay to body ground)

OK

Check the sunroof relays. Refer to page 15—88.

NG → Replace the relays.

OK

Check the voltage at each terminal of the sunroof motor.

Terminal	Voltage
Y	0V
YR	0V
YG	12V

NG → Repair the harness. (Relay to motor).

OK

Check the sunroof motor and limit switch. Refer to page 15—88, 89.

NG → Replace the motor and limit switch.

OK

Check for 12V at L terminal of the sunroof motor connector.

NG → Repair the harness. (Relay to motor)

OK

Check the voltage at each terminal of the sunroof switch connector with each roof condition.

Terminal	Roof condition	Voltage
L	Close	12V
LY		12V
LG	Open	12V
LW	Tilt up	12V
LR	Any time	12V
B		0V

NG → Repair the harness. (Motor to switch Fuse box to switch Switch to body ground)

OK

Check the sunroof switch. Replace if necessary. Refer to page 15—88.

86U15X-150

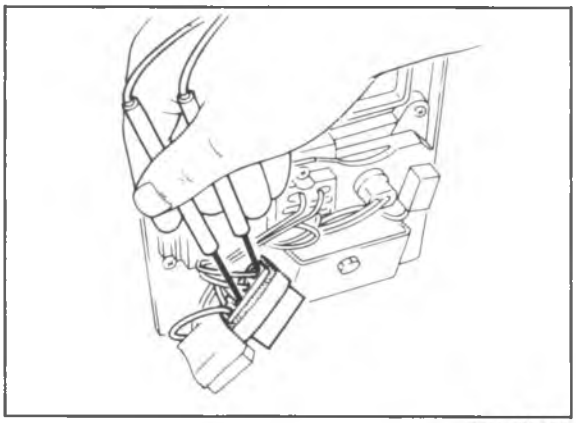

76U15X-156

INSPECTION

Switch

Use an ohmmeter to check the continuity of the terminals of the switch.
If continuity is not as indicated, replace the switch.

Position \ Terminal		2a	2b	6a	6b	6c	6d	6e	6f
OFF		○	———	○					
Slide SW	OPEN						○	———	○
	CLOSE					○	———	———	○
Tilt SW	UP				○	———	———	———	○
	DOWN							○	○

○—○: Indicates conductive

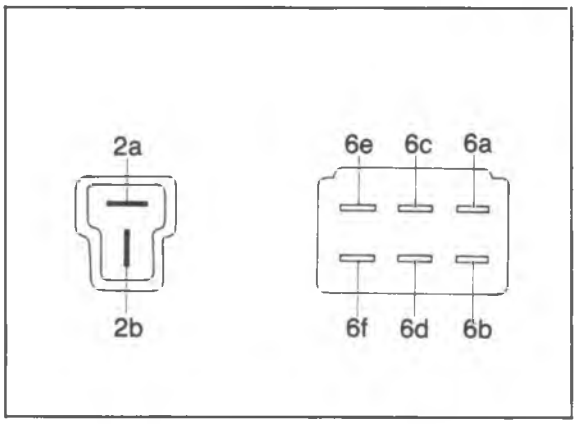

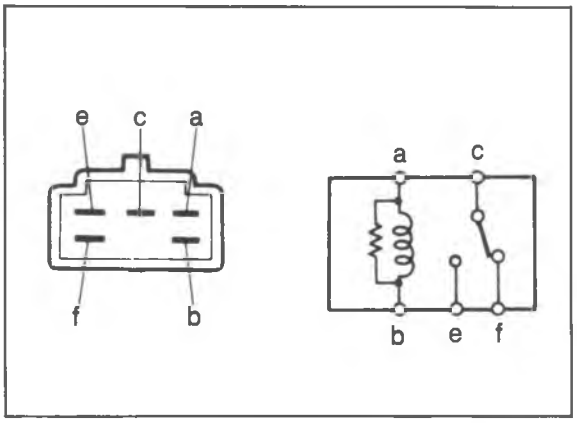

76U15X-314

Relay

1. Check the continuity between a—b and c—f.
2. Apply power source to the terminal a.
3. Connect the negative lead to the terminal b.
4. Check the continuity between c—e.

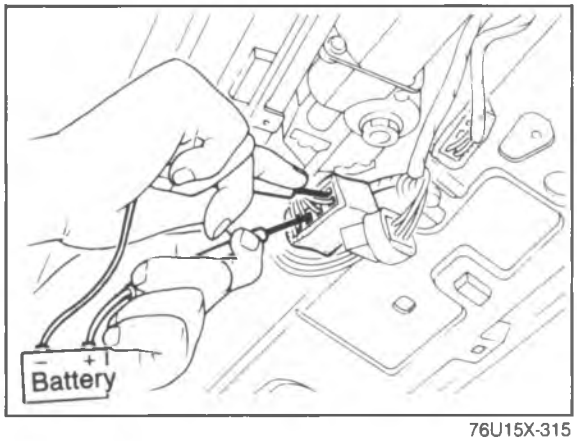

76U15X-315

Motor

1. Disconnect the connector of the motor.
2. Apply power source to YR and connect Y to the ground.
3. Check that motor turns in the direction from the tilt up, to the closed, to the open position.
4. Reverse the connection and check motor turns from the open, to the closed, to the tilt up position.

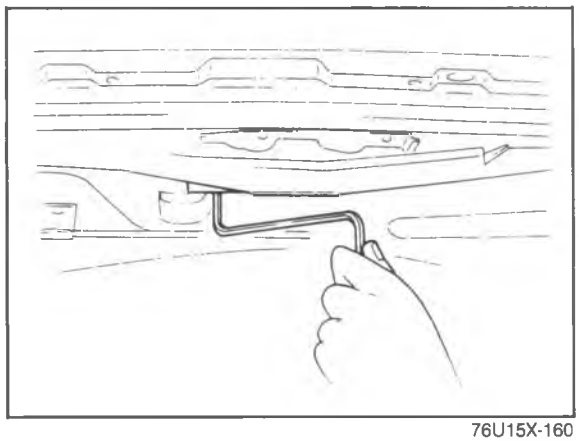

76U15X-160

Limit Switch

1. Using hex-head wrench furnished in the glove box, set the sunroof in each position.

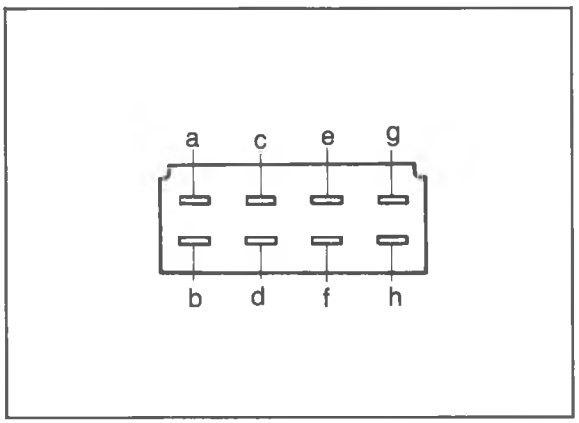

76U15X-161

2. Use an ohmmeter to check the continuity of the terminals of the switch.

SW / Terminal color / Roof condition	LS1		LS2		
	e	d	a	b	c
	L	LG	YG	LW	LY
Open			○—○		
Close			○		○
Tilt up	○—○		○		○

○—○: Indicates conductive

AUTO ADJUSTING SUSPENSION (AAS)

CIRCUIT DIAGRAM

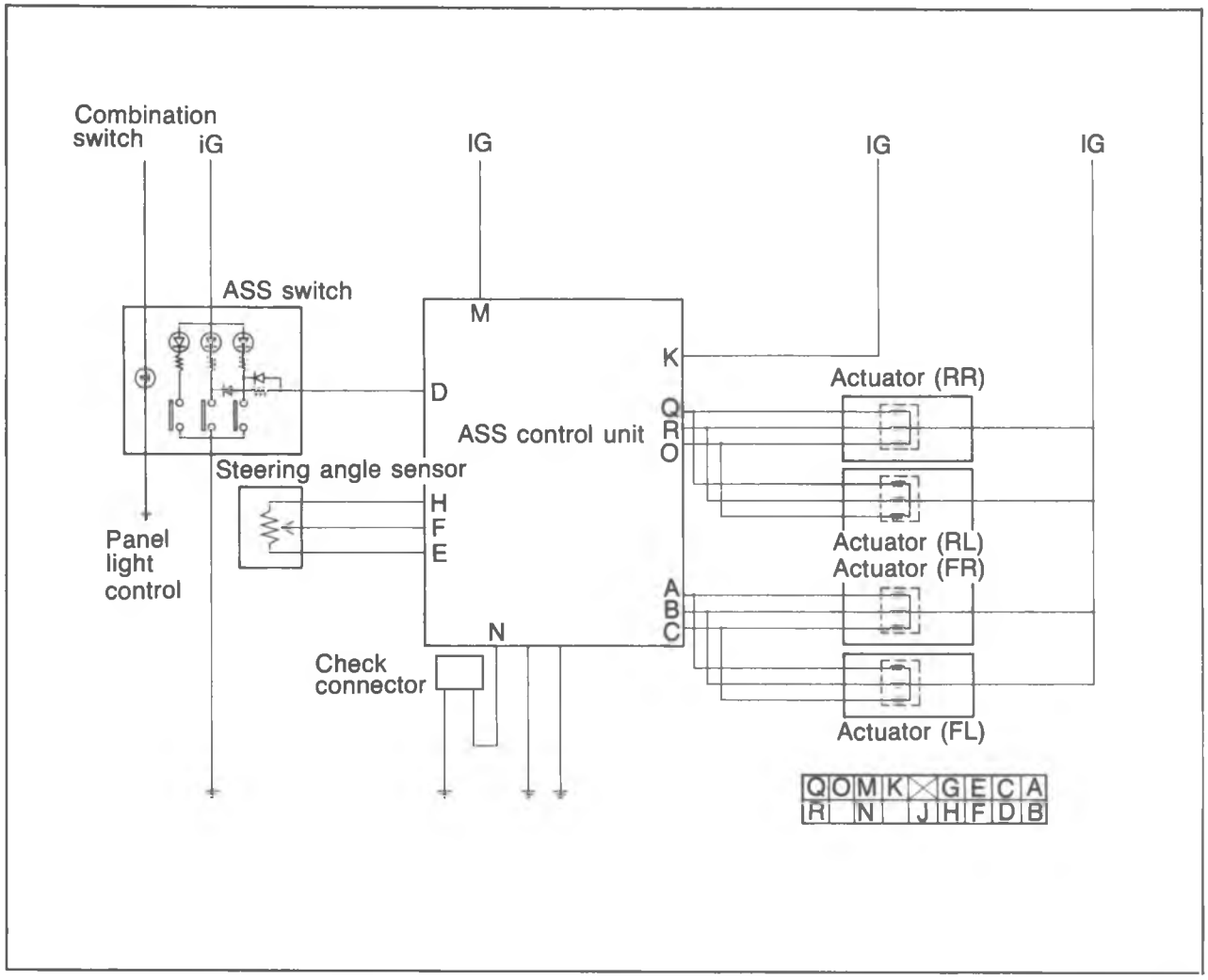

86U15X-151

TROUBLESHOOTING GUIDE

The AAS control unit has a self-diagnosis function detecting the unit itself, electrical parts for AAS system, and wiring harness open circuit, to inform mechanics. If it detects their malfunctions, outputs the output pattern to A (LW) terminal of service connector according to the settled pattern for each malfunction.

Troubleshooting against AAS system can be conducted by knowing the output pattern (See page) to detect trouble location.

86U15X-152

86U15X-153

TROUBLESHOOTING

How To Use Self-Diagnosis System

By using the control unit's self-diagnosis function and a voltmeter, malfunctions of the system are easily determined. When diagnosing malfunctions, follow the steps bellow.

1. Connect a voltmeter to A (LW) terminal of the service connector in engine room.
2. Read out the output patterns (See page 15—92) in following condition.

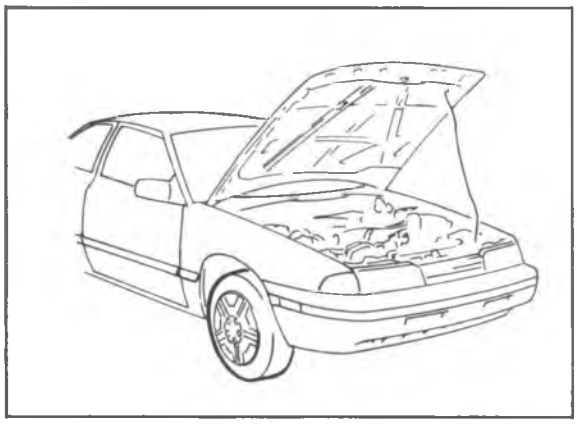

86U15X-154

Checking Condition

Note:
Turn the ignition switch OFF to reset the control unit before each test.

Condition A

1. Turn the ignition switch ON.
2. Set steering wheel in the straight-ahead position, and check the output pattern.

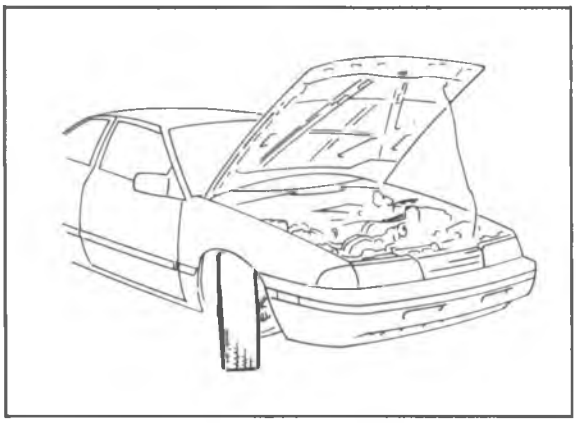

86U15X-155

Condition B

1. Turn the ignition switch ON.
2. Turn the steering wheel right and left, and check the output pattern.

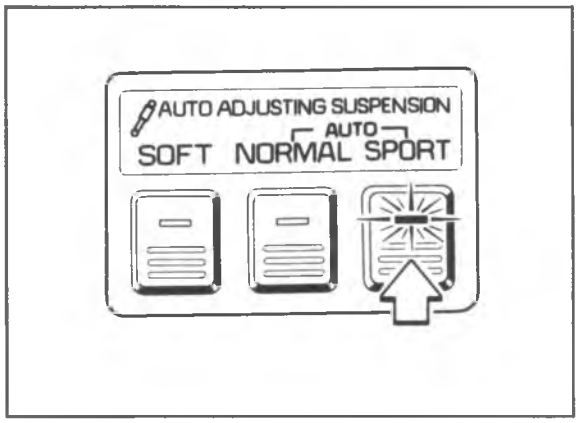

86U15X-156

Condition C

1. Turn the ignition switch ON.
2. Change the AAS switch from NORMAL to SPORT or from SPORT to NORMAL, and check the output pattern.

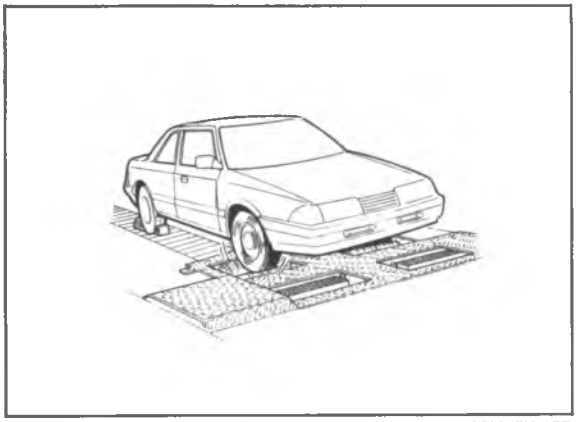

86U15X-157

Condition D

1. Operate the vehicle on a chassis roller.
2. Check the output pattern at above 15 km/h (9.3 mph).

Caution

a) Block the rear wheels.
b) In vehicle equipped with ABS, ABS warning light may come on, which is not a failure. The light goes off by turning ignition switch OFF and again ON.

Condition	Output pattern	Malfunction	Flow chart No.
A Set steering wheel in straight ahead position	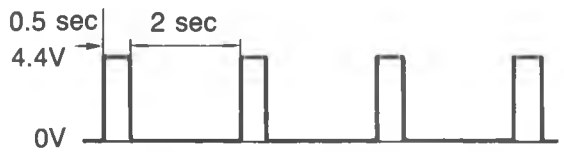	Vehicle speed sensor or wiring harness (Meter — Control unit)	AAS-1 Refer to page 15—94
	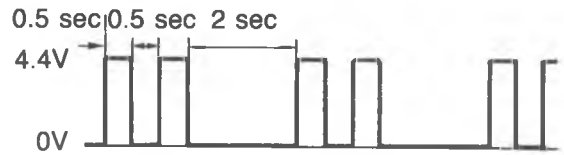	Steering wheel angle sensor or wiring harness (Angle sensor — Control unit)	AAS-2 Refer to page 15—94
		Normal operation or wiring harness (Fuse box — Control unit, control unit — Body ground)	AAS-3 Refer to page 15—95
B Turn the steering wheel right and left	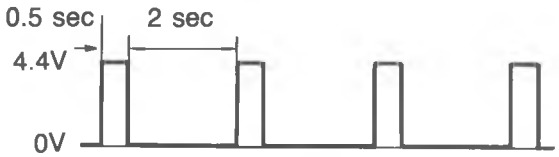	Vehicle speed sensor or wiring harness (Meter — Control unit)	AAS—1 Refer to page 15—94
	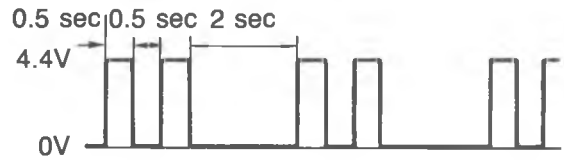	Normal operation	—
		Wiring harness (Fuse box — Control unit, Control unit — Body ground) See page	AAS-4 Refer to page 15—95
C Change the switch from NORMAL to SPORT or from SPORT to NORMAL		Normal operation	—
	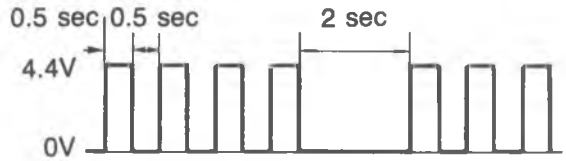	Front actuators or wiring harness (Control unit — Front right or left actuator	AAS-5 Refer to page 15—96
	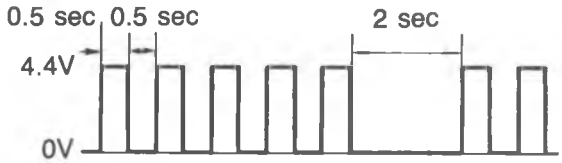	Rear actuators or wiring harness (Control unit — Rear right or left actuator	AAS-6 Refer to page 15—97

C (Cont'd)	0V	AAS switch or wiring harness (Fuse box — Control box and AAS switch, AAS switch — Control box and Body ground)	AAS—7 Refer to page 15—98
D Operate the vehicle at above 15 km/h (9.3 mph) on a chassis roller	4.4V 0V	Normal operation	—
	4.4V 0V	Speed sensor or Steering wheel angle sensor or wiring harness (Control unit — Meter, Control unit — Angle sensor)	AAS-8 Refer to page 15—98
	0V	Speed sensor or Wiring harness (Control unit — Meter, Fuse box — Control unit, Control unit — Body ground)	AAS-9 Refer to page 15—99

86U15X-158

Inspection of circuit

AAS-1	Failure of vehicle speed sensor or wiring harness (Meter — Control unit)

Check the speed sensor referring to page 15—84.

NG → Replace the speed sensor.

OK ↓

Check for continuity between 1U (GR) terminal of the meter connector and M (GR) terminal of the control unit connector.

NG → Repair the wiring harness (Control unit to Meter).

OK ↓

Replace the control unit.

86U15X-159

AAS-2	Failure of steering wheel angle sensor or wiring harness (Angle sensor — Control unit)

Disconnect the control unit connector, and check the resistance between the terminals with an ohmmeter when steering wheel in straight ahead position.

Terminal	Resistance
A(G) — D(GW)	Approx. 25 kΩ
A(G) — C(GY)	Approx. 50 kΩ
C(GY) — D(GW)	Approx. 25 kΩ

NG → Check the steering angle sensor referring to page 15—14.

OK ↓

Repair the wiring harness (Control unit to Angle sensor).

OK ↓

Replace the control unit.

86U15X-160

AAS-3	Normal operation or failure of the wiring harness (Fuse box to Control unit, Control unit to Body ground)

Check the voltage between each terminal of the control unit connector and a body ground with ignition ON.

Terminal	Voltage
G (B)	0V
J (B)	0V
K (BY)	Approx. 12V

OK → Normal operation.

NG → Replace TURN 15A fuse or repair the wiring harness (Fuse box to Control unit, Control unit to Body ground.

86U15X-161

AAS-4	Failure of wiring harnesses (Fuse box to Control unit, Control unit to Body ground).

Check the voltage between each terminal of control unit connector and a body ground with ignition ON.

Terminals	Voltage
G (B)	0V
J (B)	0V
K (BY)	Approx. 12V

OK → Replace the control unit.

NG → Replace TURN 15A fuse or repair the wiring harnesses (Fuse box to Control unit, Control unit to Body ground.

86U15X-162

AAS-5	Failure of the front actuators or the wiring harness (Control unit to Front-right or front-left actuator)

Check the voltage between each terminal of front-right and front-left connectors and a body ground with ignition ON.

	Terminal	Voltage
Left side	D (BR)	Approx. 12V
Right side	D (BR)	Approx. 12V

NG → Replace POWER WIND 30A fuse in fuse box or wiring harness (Fuse box to Actuators).

OK ↓

Disconnect the front-left actuator connector and check the voltage between each terminal of the control unit connector and a body ground with ignition ON.

Terminal	Voltage
A (WR)	Approx. 12V
B (WL)	Approx. 12V
C (WY)	Approx. 12V

NG → Check the voltage between each terminal of the front-right actuator connector and a body ground with ignition ON.

Terminal	Voltage
A (WR)	Approx. 12V
B (WL)	Approx. 12V
C (WY)	Approx. 12V

NG → Replace front-right actuator.

OK → Repair the wiring harness (Front-right actuator to Control unit).

OK ↓

Reconnect the front-left actuator connector.

Disconnect the front-right actuator connector and check the voltage between each terminal of the control unit connector and a body ground with ignition ON.

Terminal	Voltage
A (WR)	Approx. 12V
B (WL)	Approx. 12V
C (WY)	Approx. 12V

NG → Check the voltage between each terminal of the front-left actuator connector and a body ground with ignition ON.

Terminal	Voltage
A (WR)	Approx. 12V
B (WL)	Approx. 12V
C (WY)	Approx. 12V

NG → Replace front-left actuator.

OK → Repair wiring harness (Front-left actuator to Control unit).

OK ↓

Replace the control unit.

86U15X-163

AAS-6	Failure of the rear actuators or wiring harness (Control unit to rear-right or rear-left actuator)

Check the voltage between each terminal of rear-right and rear-left actuator connectors and a body ground with ignition ON.

	Terminal	Voltage
Left side	D (BR)	Approx. 12V
Right side	D (BR)	Approx. 12V

NG → Replace POWER WIND 30A fuse in fuse box or wiring harness (Fuse box to Actuators).

OK ↓

Disconnect the rear-left actuator connector and check the voltage between each terminal of the control unit connector and a body ground with ignition ON.

Terminal	Voltage
O (YL)	Approx. 12V
Q (YR)	Approx. 12V
R (YG)	Approx. 12V

NG → Check the voltage between each terminal of the rear right side actuator connector and a body ground with ignition ON.

Terminal	Voltage
A (YR)	Approx. 12V
B (YG)	Approx. 12V
C (YL)	Approx. 12V

NG → Replace rear-right actuator.

OK → Repair wiring harness (Rear-right actuator to Control unit).

OK ↓

Reconnect the rear-left actuator connector.

Disconnect the rear-right actuator connector and check the voltage between each terminal of the control unit connector and a body ground with ignition ON.

Terminal	Voltage
O (YL)	Approx. 12V
Q (YR)	Approx. 12V
R (YG)	Approx. 12V

NG → Check the voltage between each terminal of the rear-left actuator connector and a body ground with ignition ON.

Terminal	Voltage
A (YR)	Approx. 12V
B (YG)	Approx. 12V
C (YL)	Approx. 12V

NG → Replace rear-left actuator.

OK → Replace wiring harness (Rear-left actuator to Control unit).

OK ↓

Replace the control unit.

86U15X-164

AAS-7	Failure of AAS switch or wiring harness (Fuse box to Control unit and AAS switch, AAS switch to Control unit and Body ground

Check the voltage between each terminal of AAS switch connector and a body ground with ignition ON.

Terminal	Voltage
F (BY)	12V
H (B)	0V

NG → Replace METER 10A fuse or repair the wiring harness (Fuse box to AAS switch, AAS switch to Body ground).

OK ↓

Check the operation of the AAS switch referring to page 15—100.

NG → Replace the AAS switch.

OK ↓

Check for continuity, between D (LY) terminal of control unit and D (LY) terminal of AAS switch.

NG → Repair wiring harness.

OK ↓

Replace the control unit.

AAS-8	Failure of speed sensor or steering wheel angles sensor or wiring harness (Control unit to Meter, Control unit to Angle sensor).

Disconnect the control unit connector, and check the resistance between the terminals with steering wheel in straight ahead position with an ohmmeter.

Terminal	Resistance
A(G) — D(GW)	Approx. 25 kΩ
A(G) — C(GY)	Approx. 50 kΩ
C(GY) — D(GW)	Approx. 25 kΩ

NG → Check the steering angle sensor referring to page 15—14.

OK ↓

Repair the wiring harness (control unit to Angle sensor).

OK ↓

Go to AAS-1 routine.

86U15X-165

AAS-9	Failure of speed sensor or wiring harness (Control unit to Meter, Fuse box to Control unit, Control unit to Body ground)

Check the voltage between each terminal of control unit connector and a body ground with ignition ON.

Terminal	Voltage
G (B)	0V
J (B)	0V
K (BY)	Approx. 12V

NG → Replace METER 10A fuse or repair the wiring harness (Fuse box to Control unit, Control unit to Body ground).

OK → Go to AAS-1 routine.

86U15X-166

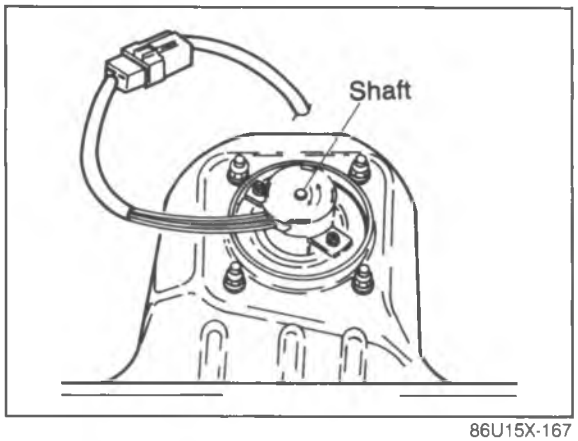

86U15X-167

Actuator Inspection

1. Turn the ignition switch ON.
2. Alternately switch ON the "NORMAL" and "SPORT" switches. Check whether the shaft of the actuator installed on the front and rear damper operates. (Visual inspection)

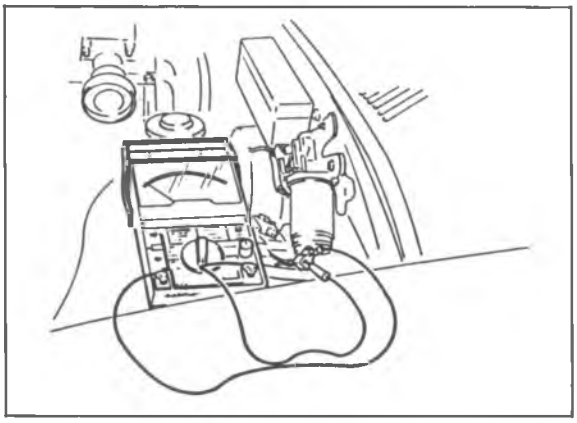

86U15X-168

3. If the actuator does not operate, disconnect the actuator connector and check for a few ohms resistance between the terminals.

Terminal		Resistance
Front	A(WR) — D(BR)	2—8 (Ω)
	B(WL) — D(BR)	
	C(WR) — D(BR)	
Rear	A(YR) — D(BR)	
	B(YG) — D(BR)	
	C(YL)— D(BR)	

Steering Wheel Angle Sensor Inspection

See page 15—14

Vehicle Speed Sensor Inspection

See page 15—84

86U15X-169

POWER DOOR LOCK

STRUCTURAL VIEW

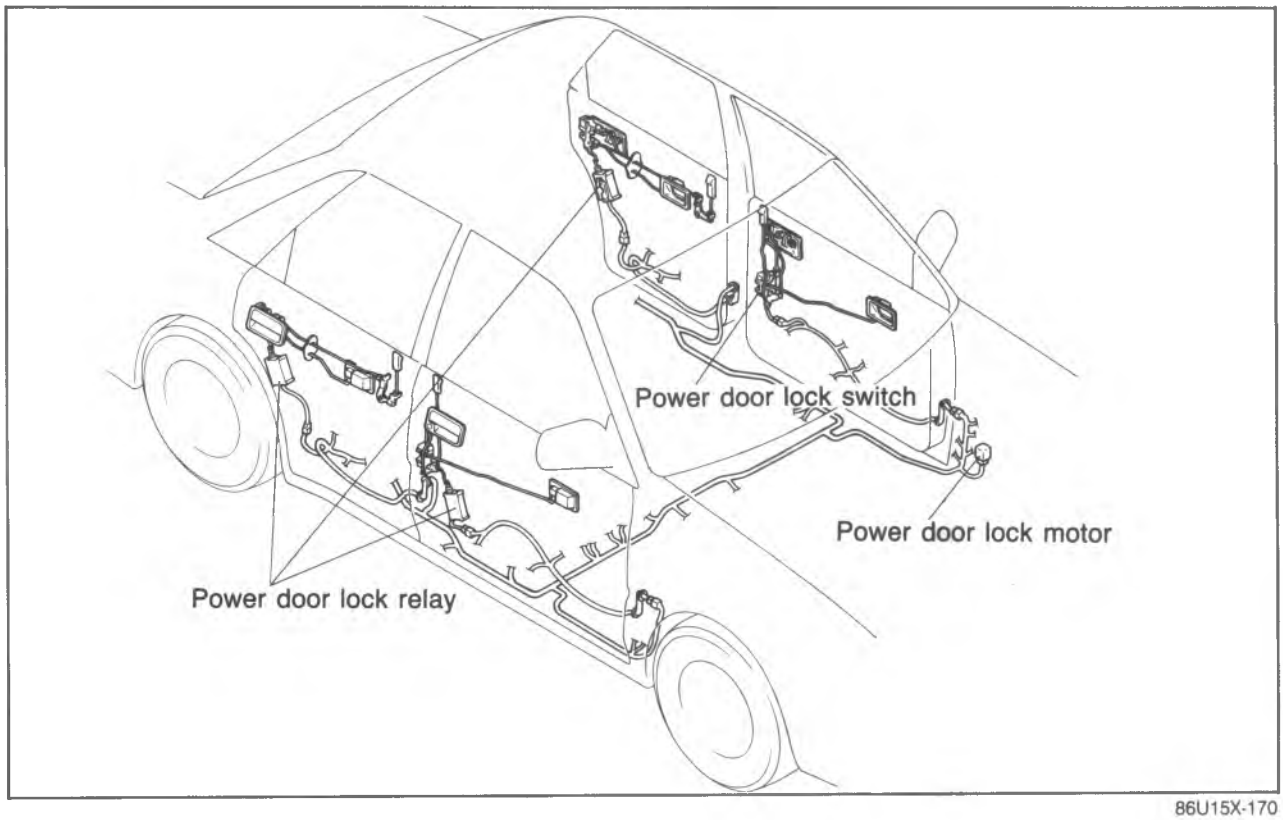

86U15X-170

CIRCUIT DIAGRAM

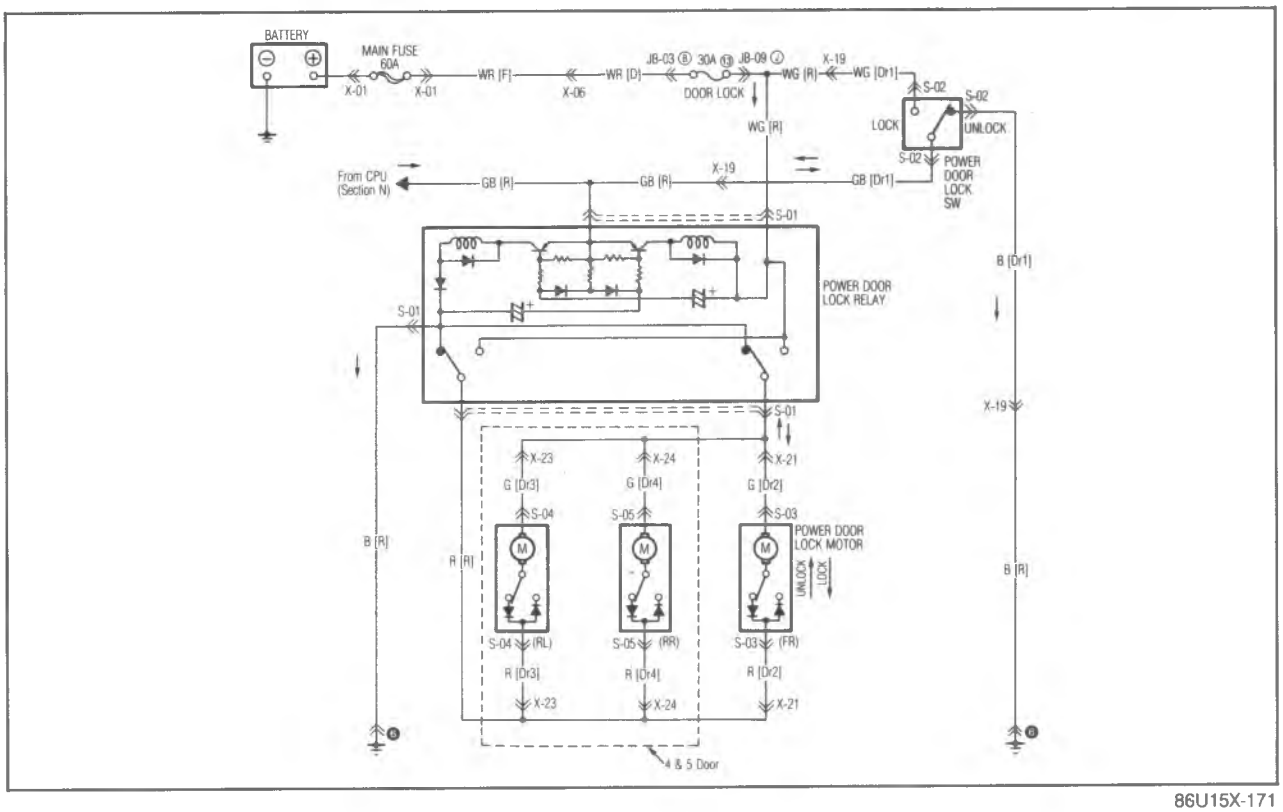

86U15X-171

TROUBLESHOOTING

Power door lock does not operate.

Check DOOR LOCK 30A fuse.

- NG → Short circuit.
- OK ↓

Check the voltage at each terminal of the power door lock relay connector.

Terminal	Voltage
WG	12V
B	0V

- NG → Repair the harness. (Fuse box to relay, Relay to ground)
- OK ↓

Check the power door lock switch. Refer to page 15—103.

- NG → Replace the switch.
- OK ↓

Check the voltage at GB terminal of the power door lock relay with each switch condition.

Terminal	Condition	Voltage
GB	Lock	12V
	Unlock	0V

- NG → Repair the harness. (Door lock switch to relay)
- OK ↓

Check the voltage at R and G terminal of the power door lock relay with each switch condition.

Terminal	Condition	Voltage
R	Lock	0V
	Unlock	12V
G	Lock	12V
	Unlock	0V

- NG → Replace the door lock relay.
- OK ↓

Check the power door lock motor. Refer to page 15—103.

- NG → Replace the door lock motor.
- OK ↓

Repair the harness. (Relay to each motors)

86U15X-172

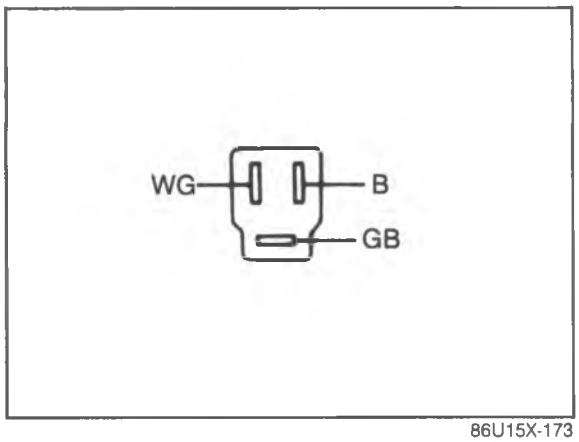

86U15X-173

INSPECTION

Power Door Lock Switch

1. Check for continuity of the switch with an ohmmeter.

	WG	GB	B
Lock	○———	———○	
Unlock		○———	———○

○——○: indicates continuity

2. If continuity is not as specified, replace the switch.

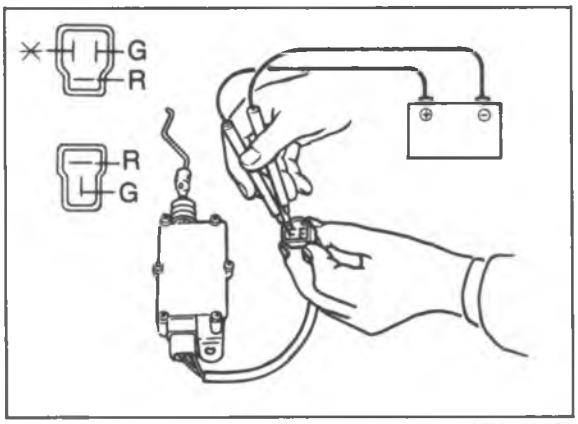

86U15X-174

Power Door Lock Motor

1. Check operation of the door lock actuator when the battery voltage is applied to the terminal.

Connecting to		Door lock motor
12V	ground	
G	R	LOCK (Pull)
R	G	UNLOCK (Release)

2. If not, replace the door lock motor.

AUTOMATIC SHOULDER BELT

STRUCTURAL VIEW

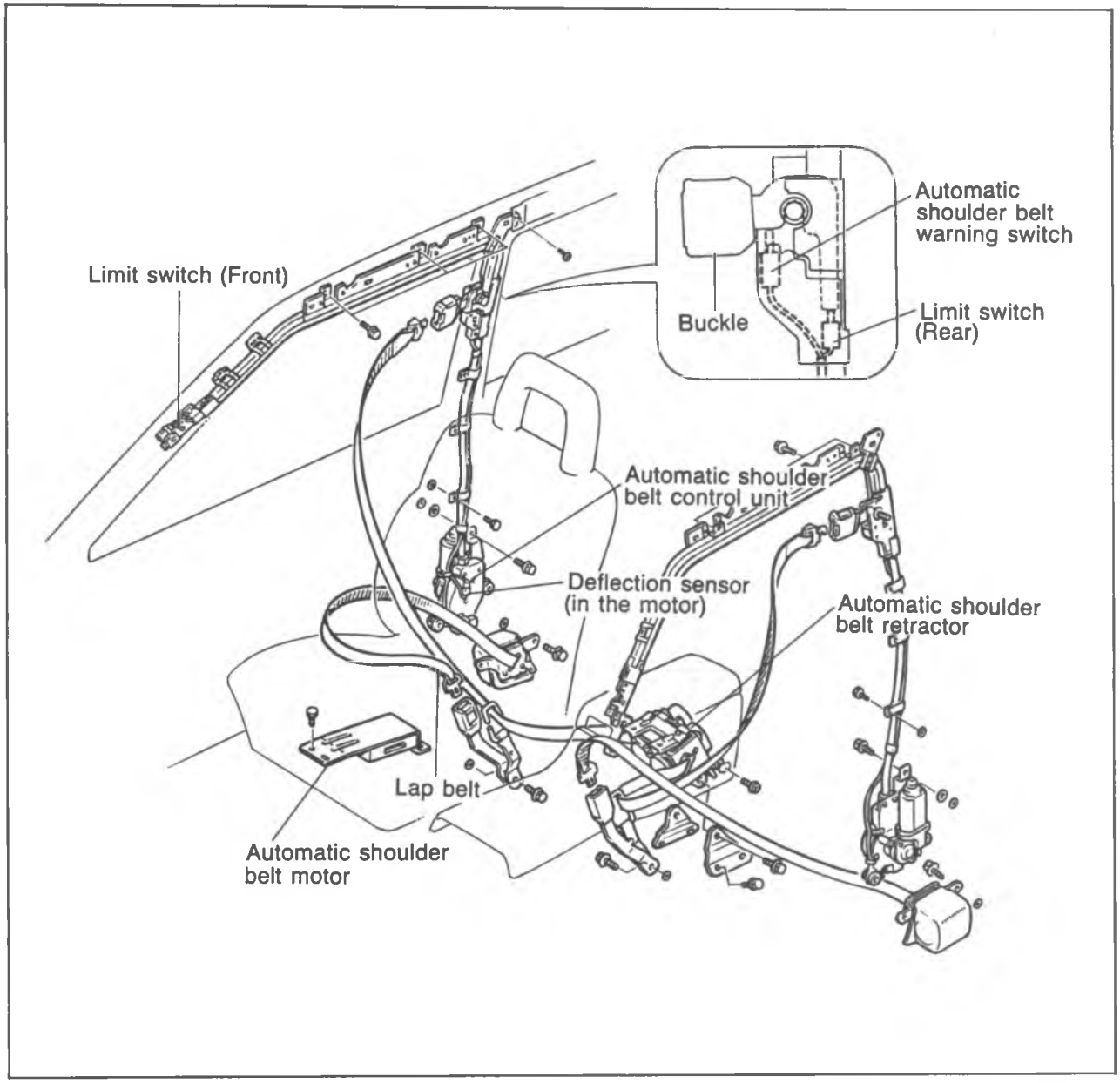

86U15X-175

CIRCUIT DIAGRAM

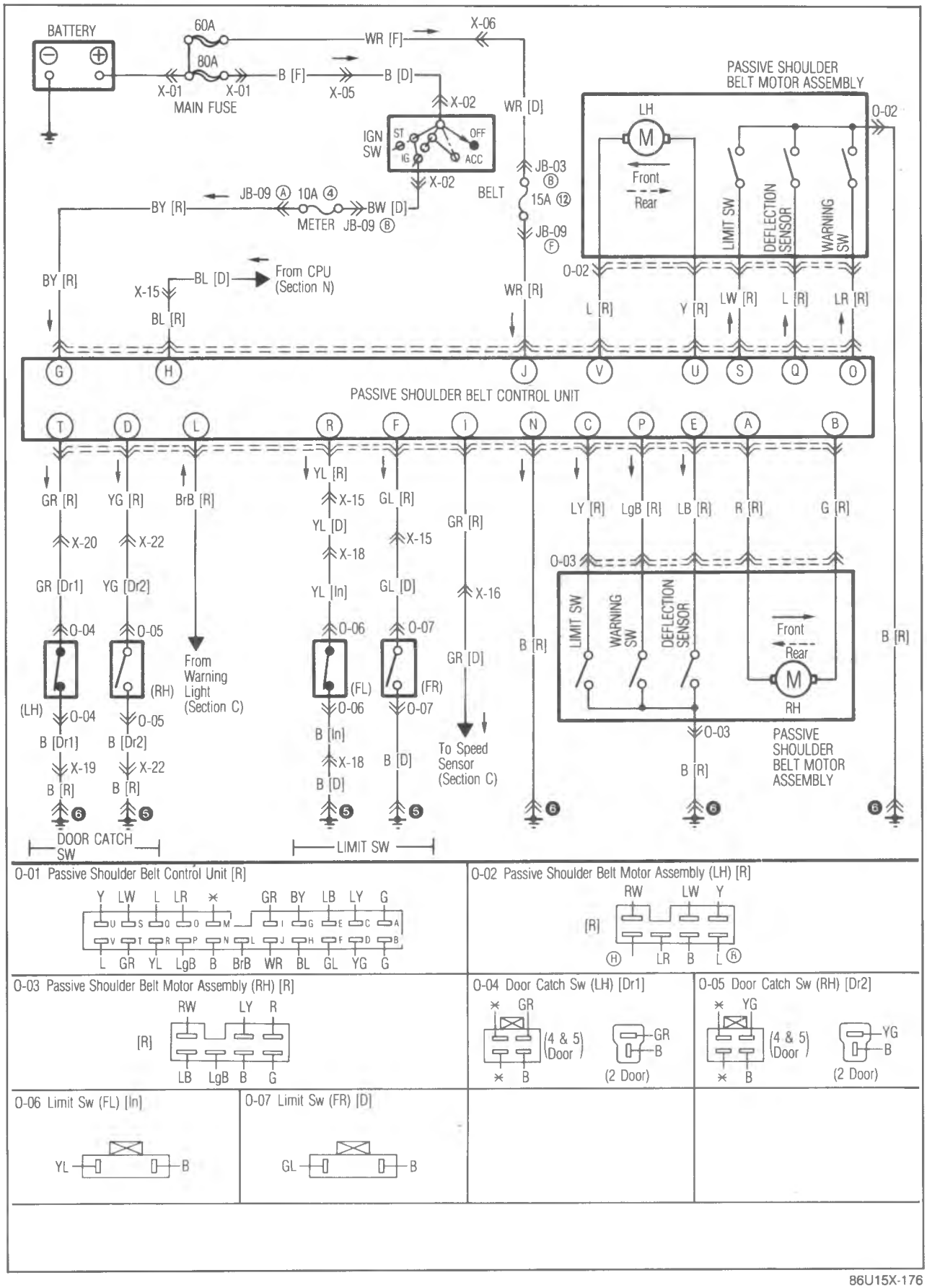

86U15X-176

TROUBLESHOOTING

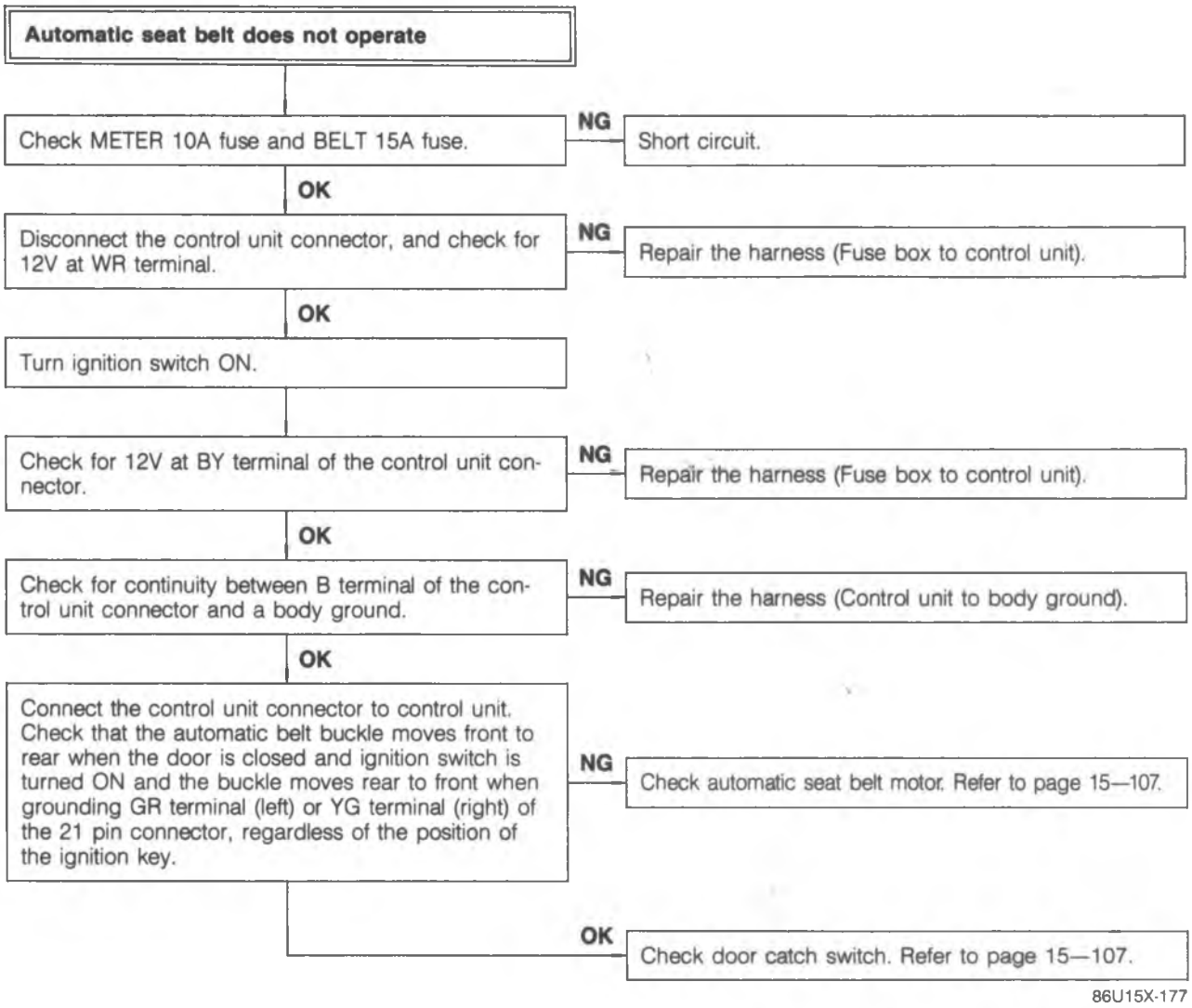

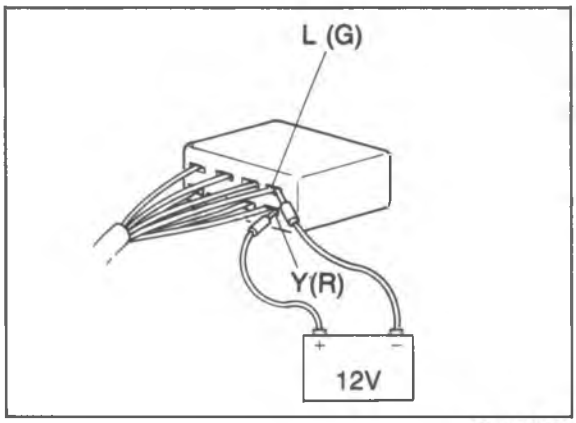

86U15X-250

INSPECTION

Automatic Seat Belt Motor

1. Remove the front and center pillar trim and disconnect the automatic seat belt motor connector.
2. Connect 12V to the **Y** (passenger side **:R**) wire and ground the **L** wire, and check that the motor rotates in the forward direction (release).
3. Reverse the above connection, and check that the motor rotates in the rearward direction (lock).

CAUTION
Do not operate the motor for an extended period of time.

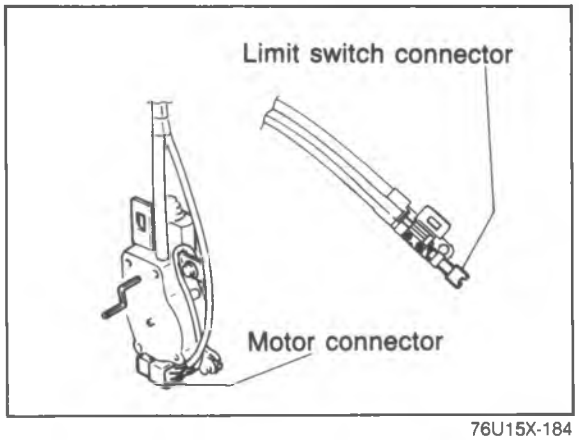

76U15X-184

Limit Switch

1. Remove the front and center pillar trim and disconnect the automatic seat belt motor connector, and disconnect the limit switch connector.

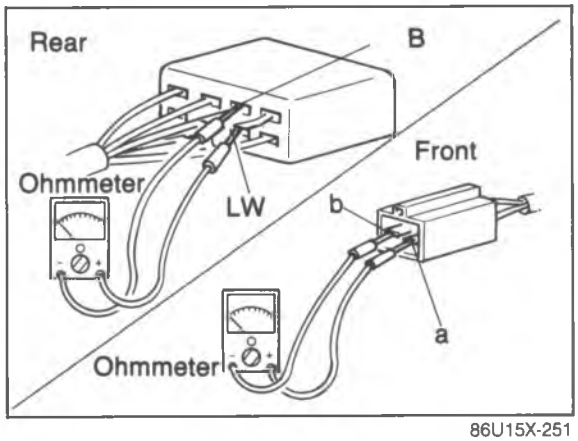

86U15X-251

2. Check continuity between the limit switch terminals with each condition using the emergency handle.

Limit switch / Seat belt position	Front		Rear	
	a	b	c	d
Released (Front)	O—O			
Released and Locked				
Locked (Rear)			O—O	

O—O: Indicates continuity

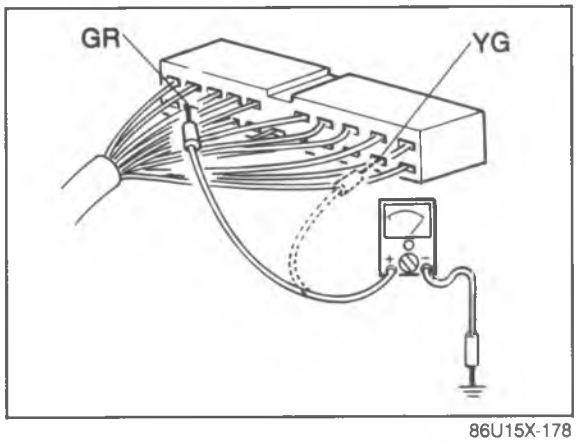

86U15X-178

Door Catch Switch

1. Disconnect the automatic seat belt control unit 21 pin connector.
2. Check continuity between the **GR** wire and **YG** wire and a body ground with each condition.

Door position	Left		Right	
	T (GR)	Ground	D (YG)	Ground
Open	O—O		O—O	
Closed				

O—O: Indicates continuity

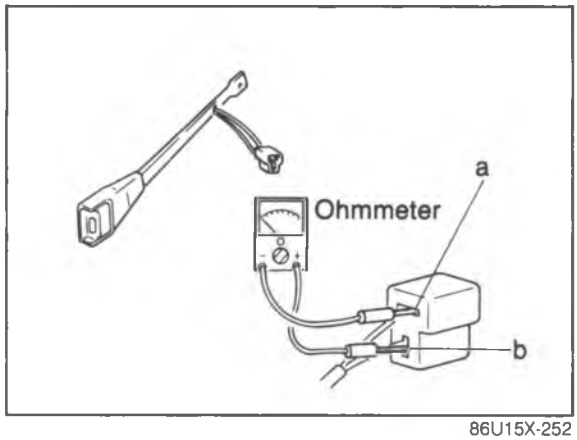

86U15X-252

Buckle Switch (Lap Belt)

1. Disconnect buckle switch connector.
2. Check continuity between the switch using an ohmmeter.

Terminal / Lap belt	a	b
Unfastened	○——	——○
Fastened		

○——○: Indicates continuity

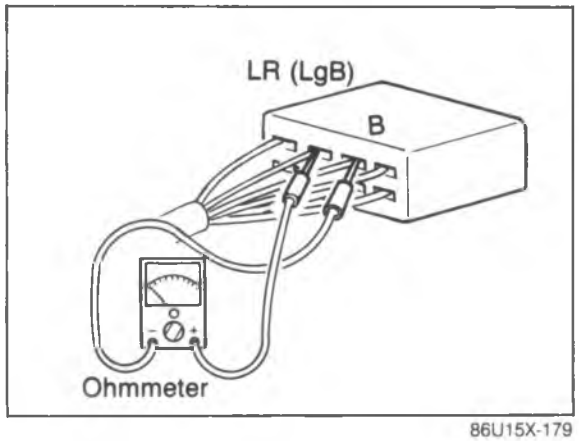

86U15X-179

Seat Belt Warning Switch

1. Remove the center pillar trim, and disconnect the automatic seat belt motor connector.
2. Check continuity between the terminals when the automatic seat belt is at rear the lock position.

Terminal / Set belt position		Left side		Right side	
		LR	B	LgB	B
Locked	Belt fastened	○—	—○	○—	—○
	Belt unfastened				

○——○: Indicates continuity

AUDIO SYSTEM

OUTLINE OF AUDIO SYSTEM

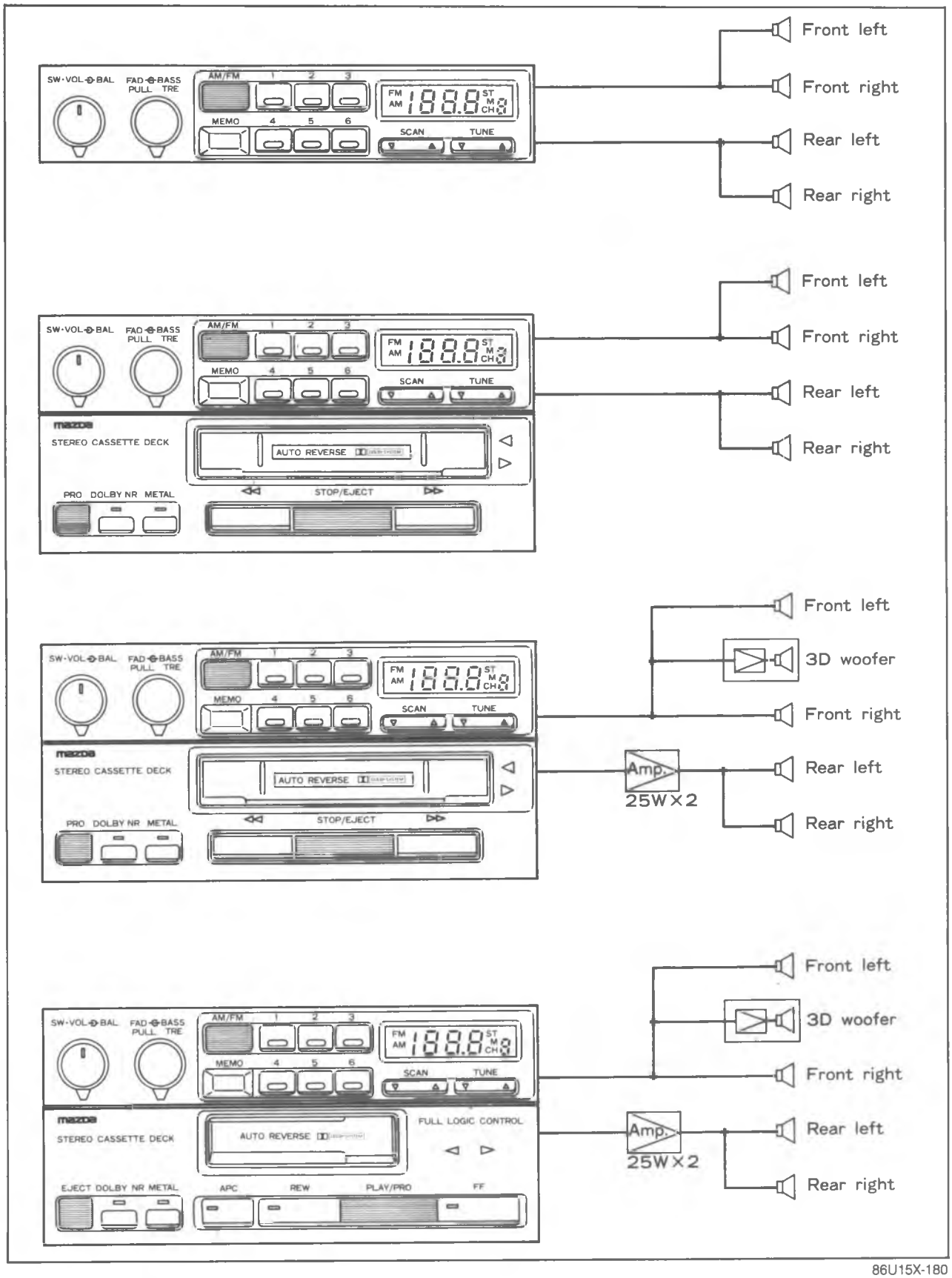

86U15X-180

OUTLINE OF AUDIO SYSTEM

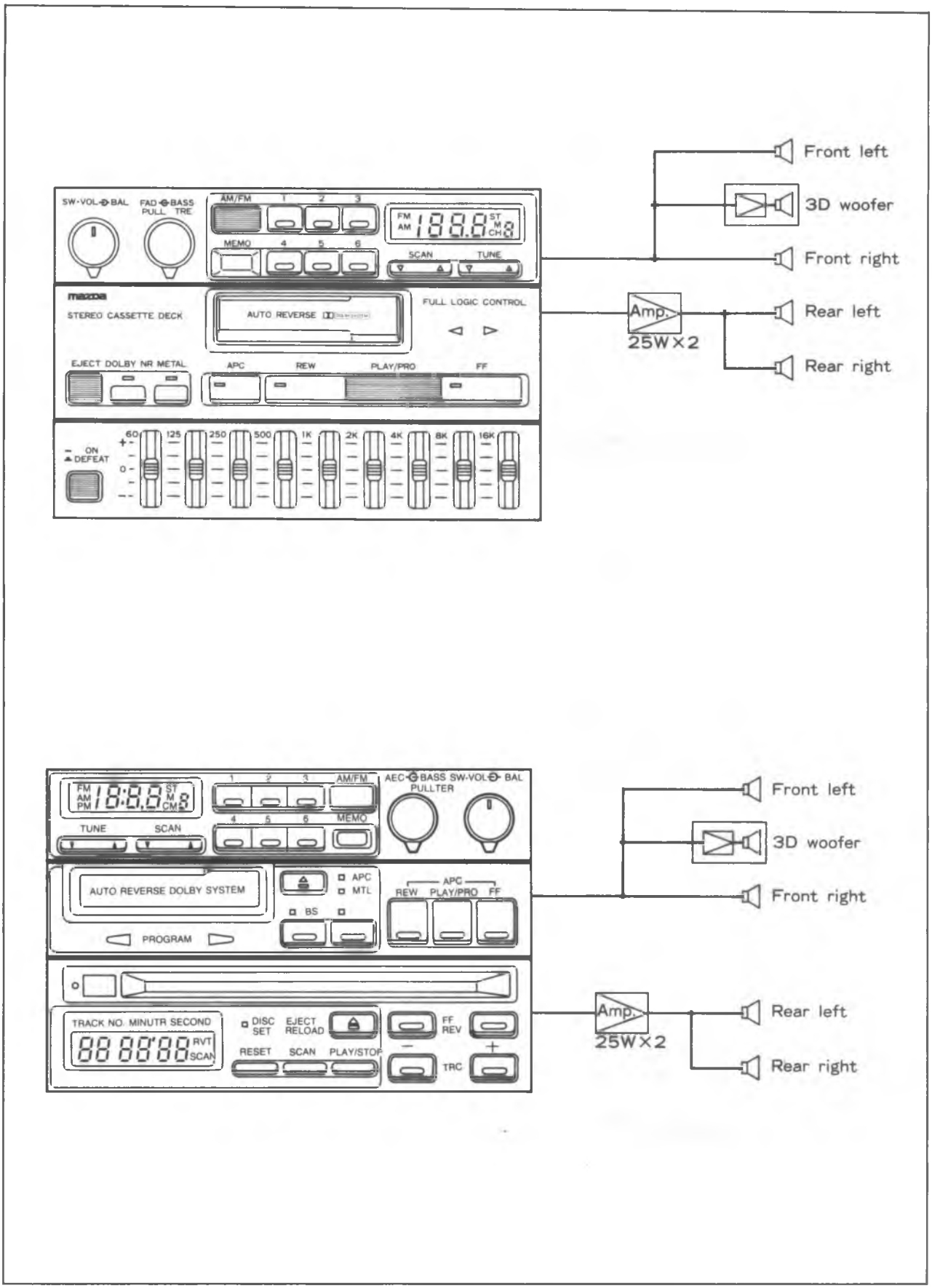

86U15X-181

REAR CONECTOR VIEW

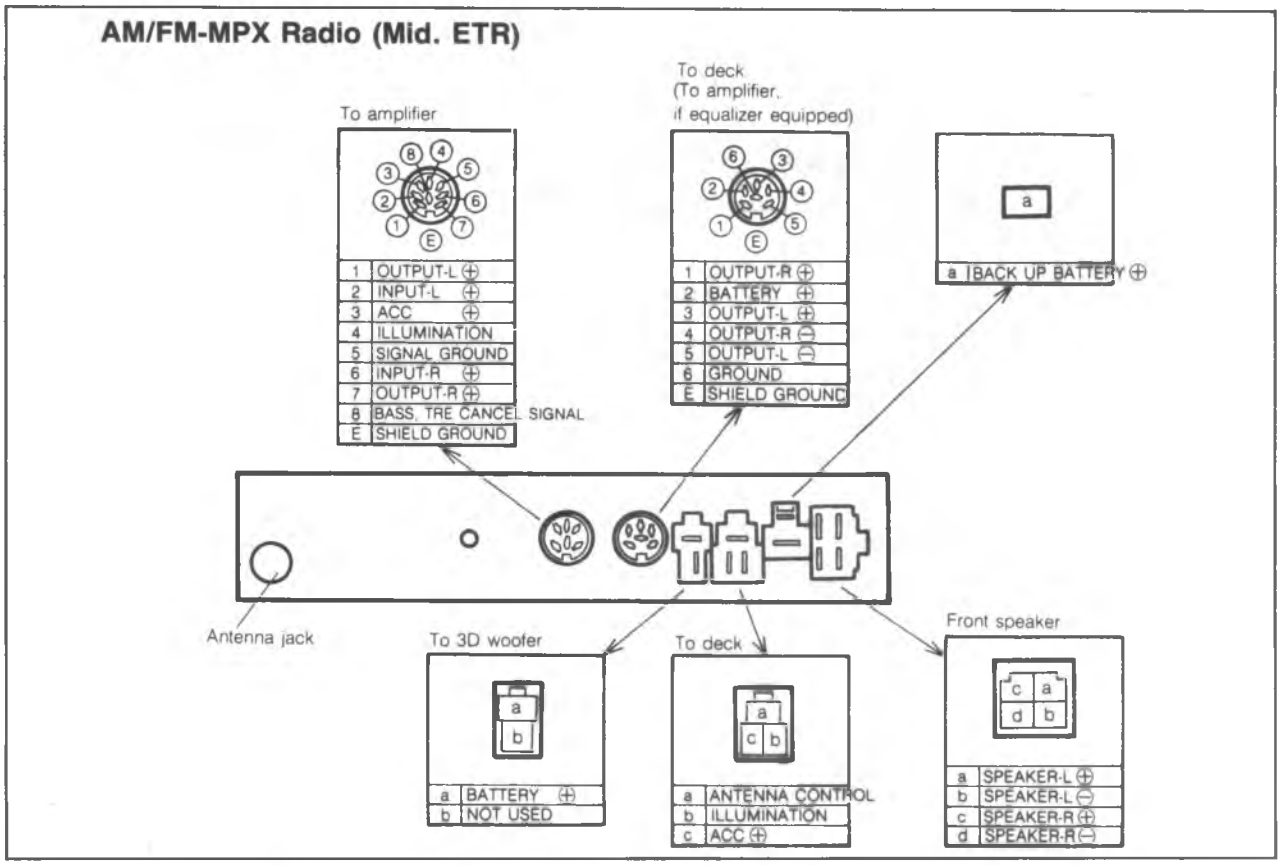

86U15X-250

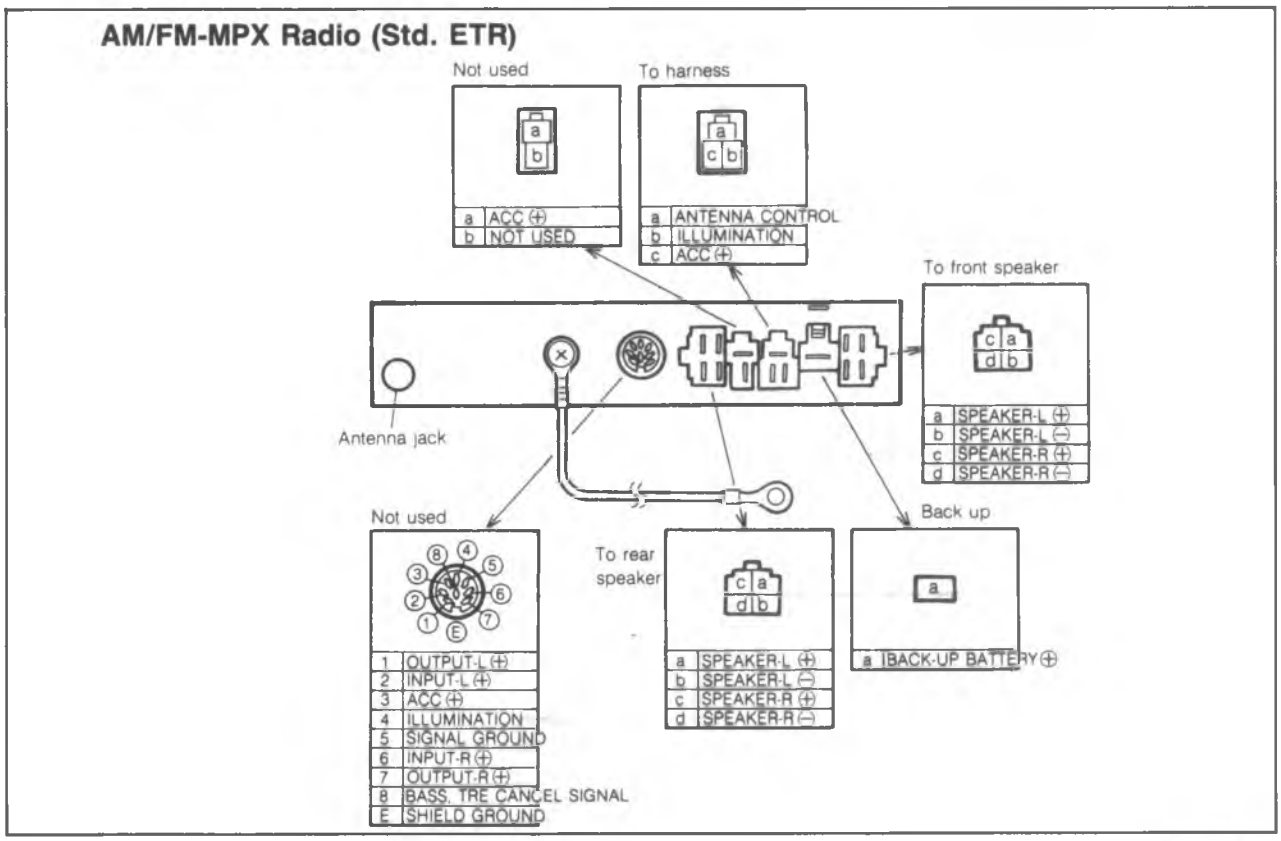

76U15X-207

REAR CONECTOR VIEW

AM/FM MUL TIPLEX RADIO (ETR) (only system 6)

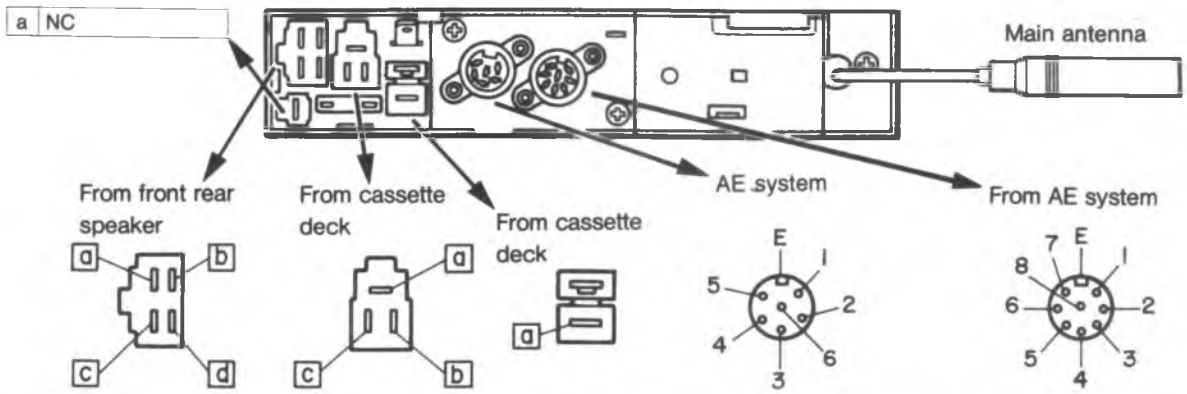

a	Speaker-L ⊕
b	Speaker-L ⊖
c	Speaker-R ⊕
d	Speaker-R ⊖

a	Antenna relay (Grounded when radio is on)
b	Illumination
c	⊕ 13.2V (ACC)

a	Back-up

1	Output-R ⊕
2	⊕ 13.2V
3	Output-L ⊕
4	Output-R ⊖
5	Output-L ⊖
6	Ground
E	Shield ground

1	Output-L ⊕
2	Input-L ⊕
3	⊕ 13.2V
4	Illumination
5	Ground
6	Input-R ⊕
7	Output-R ⊕
8	NC
E	Shield ground

86U15X-182

AUTO-REVERSE CASSETTE DECK

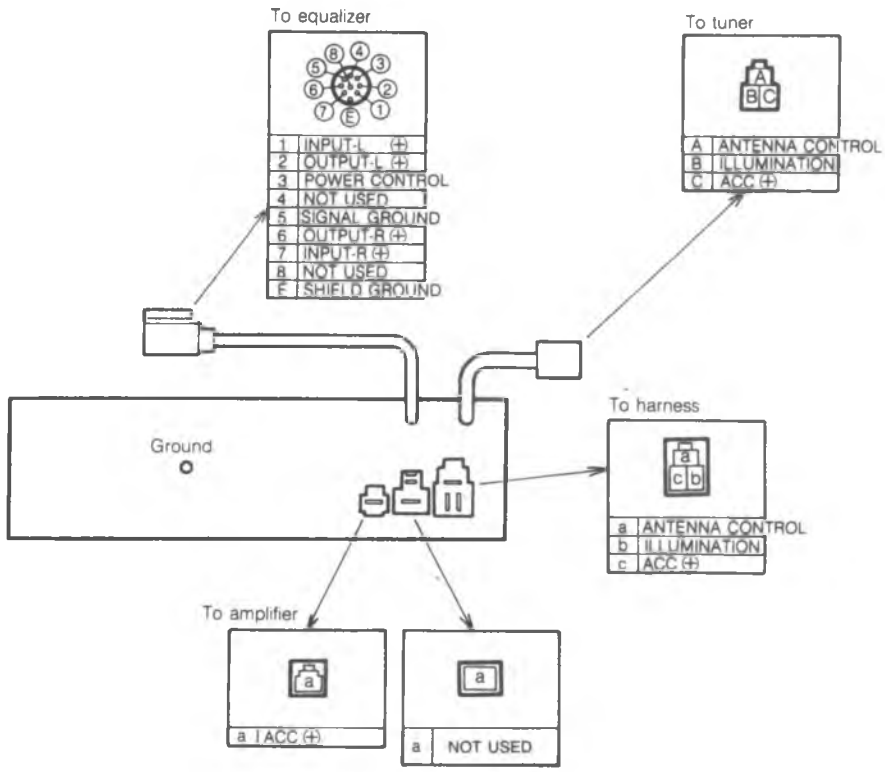

76U15X-208

REAR CONECTOR VIEW

FULL-LOGIC AUTO-REVERSE CASSETTE DECK

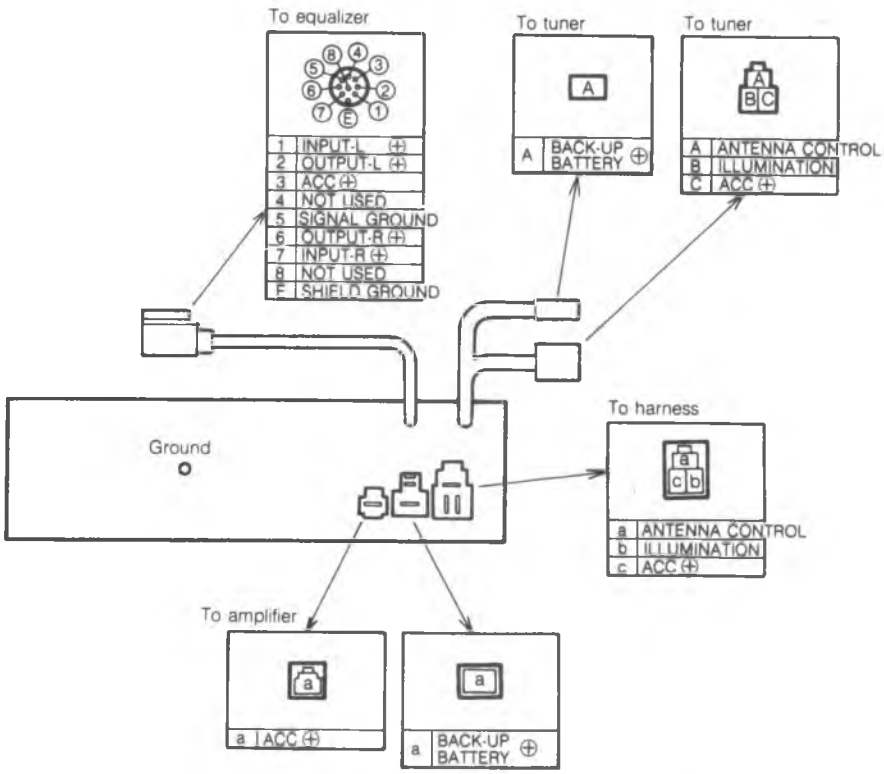

86U15X-183

FULL LOGIC AUTO-REVERSE CASSETTE DECK (only system 6)

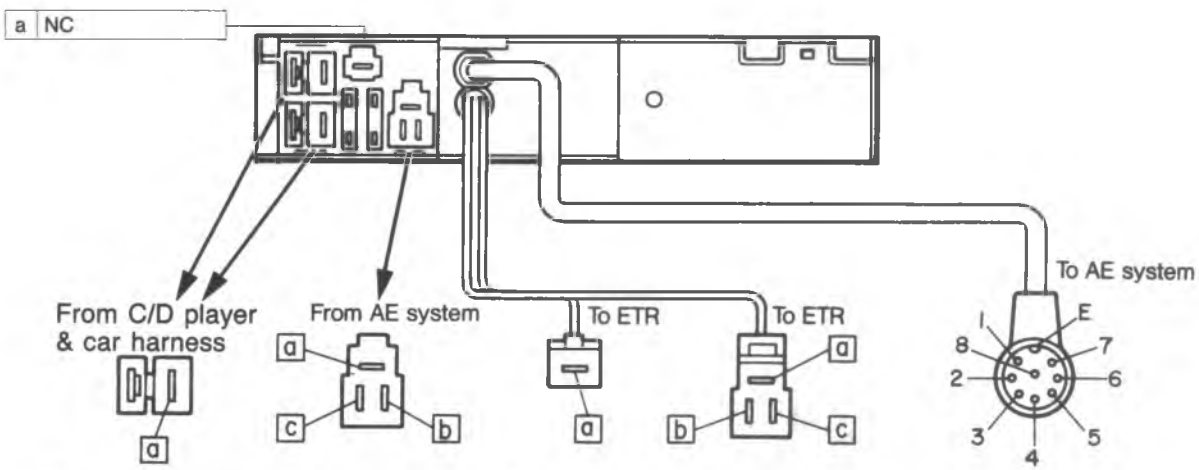

a	Back-up

a	Antenna relay (Grounded when radio is on)
b	Illumination
c	⊕ 13.2V (ACC)

a	Back-up

a	Antenna relay (Grounded when radio is on)
b	Illumination
c	⊕ 13.2V (ACC)

1	NC
2	Output-L ⊕
3	SWD ⊕ B
4	NC
5	Ground
6	Output-R ⊕
7	NC
8	NC
E	Shield ground

86U15X-184

REAR CONECTOR VIEW

Graphic equalizer

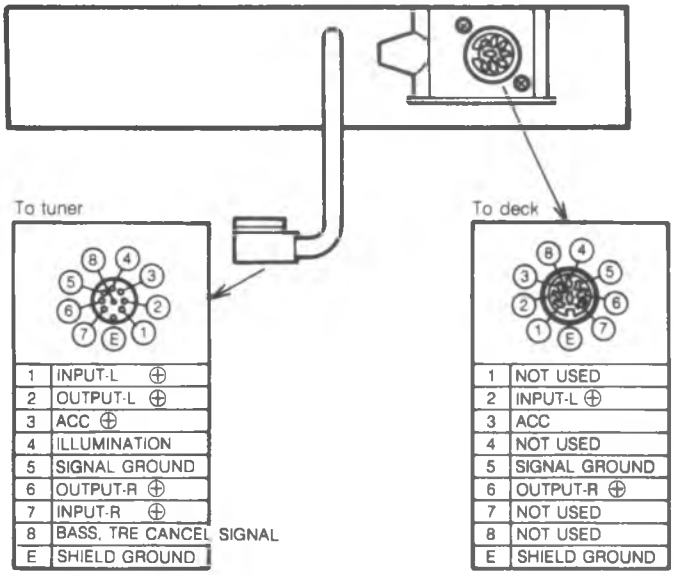

86U15X-251

COMPACT DISC PLAYER

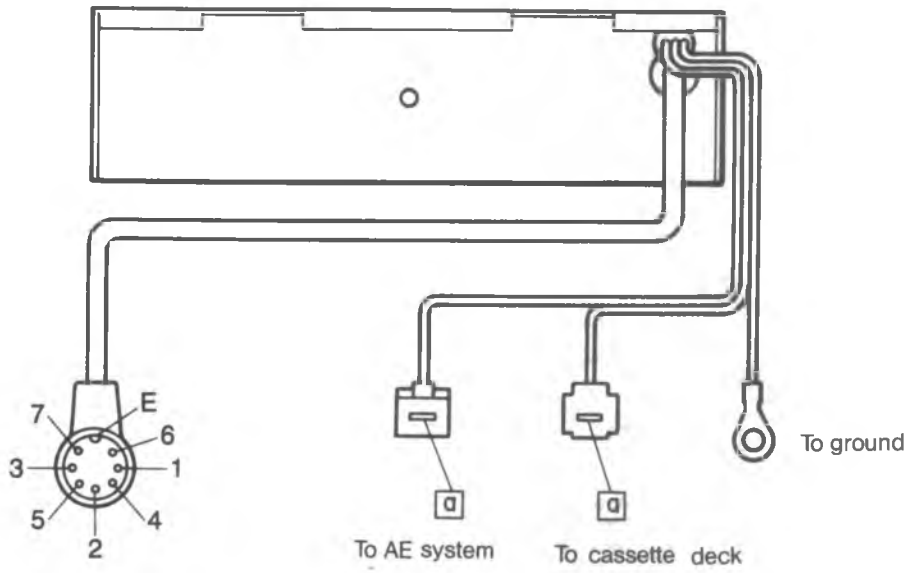

a	⊕ 13.2V (ACC)	Back-up

1	AUX + B
2	Input-L ⊕
3	Ground
4	NC
5	Input-R ⊕
6	NC
7	Illumination
E	Shield ground

REAR CONECTOR VIEW

Amplifier

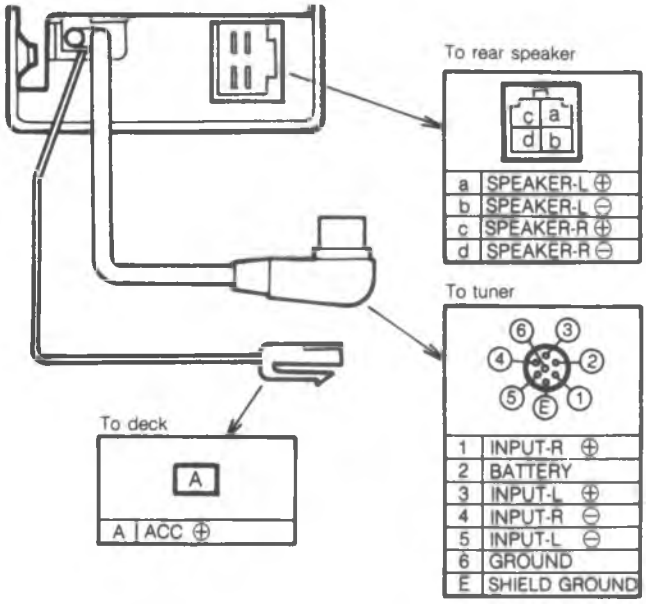

86U15X-253

AE SYSTEM

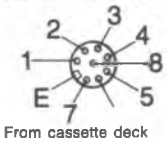

From cassette deck

1	NC
2	Input-L ⊕
3	SWD ⊕ B
4	NC
5	Ground
6	Input-R ⊕
7	NC
8	NC
E	Shield ground

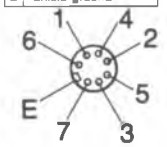

From compact disc

1	AUX + B
2	Input-L ⊕
3	Ground
4	NC
5	Input-R ⊕
6	NC
7	Illumination
E	Shield ground

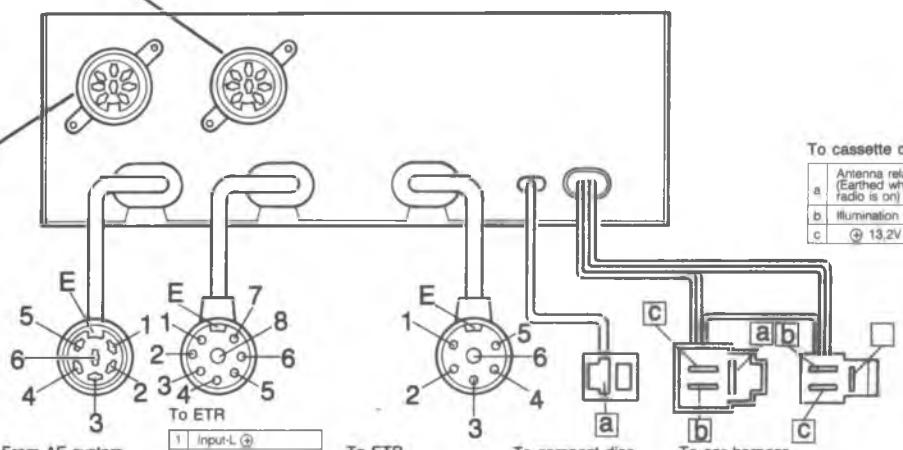

To cassette deck

a	Antenna relay (Earthed when radio is on)
b	Illumination
c	⊕ 13,2V (ACC)

From AE system

1	Output-R ⊕
2	13.2V (control power)
3	Output-L ⊕
4	Output-R –
5	Output-L –
6	Ground

To ETR

1	Input-L ⊕
2	Output-L ⊕
3	SWD ⊕ B
4	NC
5	Ground
6	Output-R ⊕
7	Input-R ⊕
8	NC
E	Shield ground

To ETR

1	Output R +
2	13,2V (Control power)
3	Output L +
4	Output R –
5	Output L –
6	Ground

To compact disc

a	⊕ 13.2V (ACC)

To car harness

a	Antenna relay (Earthed when radio is on)
b	Illumination
c	⊕ 13,2V (ACC)

TROUBLESHOOTING

Radio (ETR)

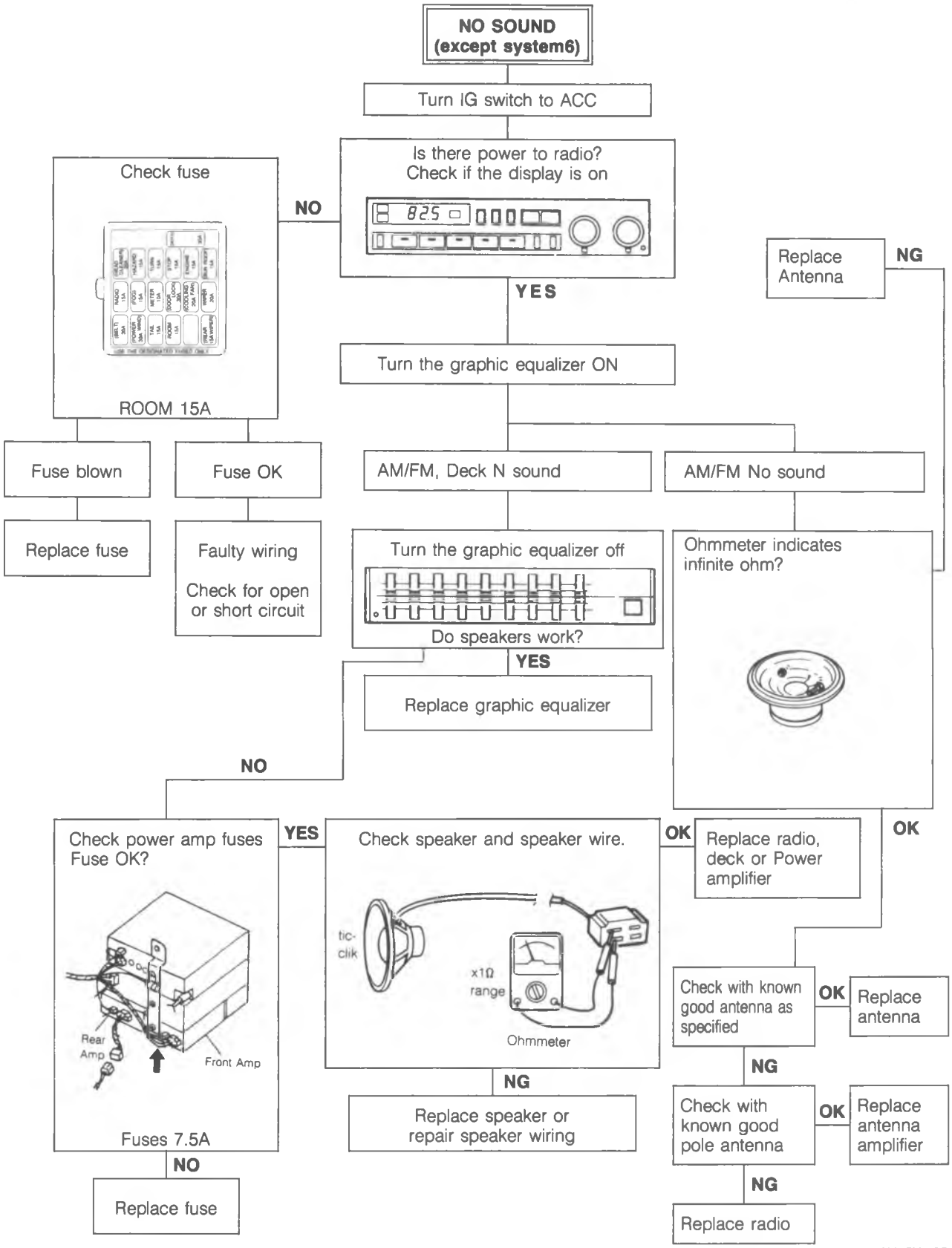

Radio (ETR)

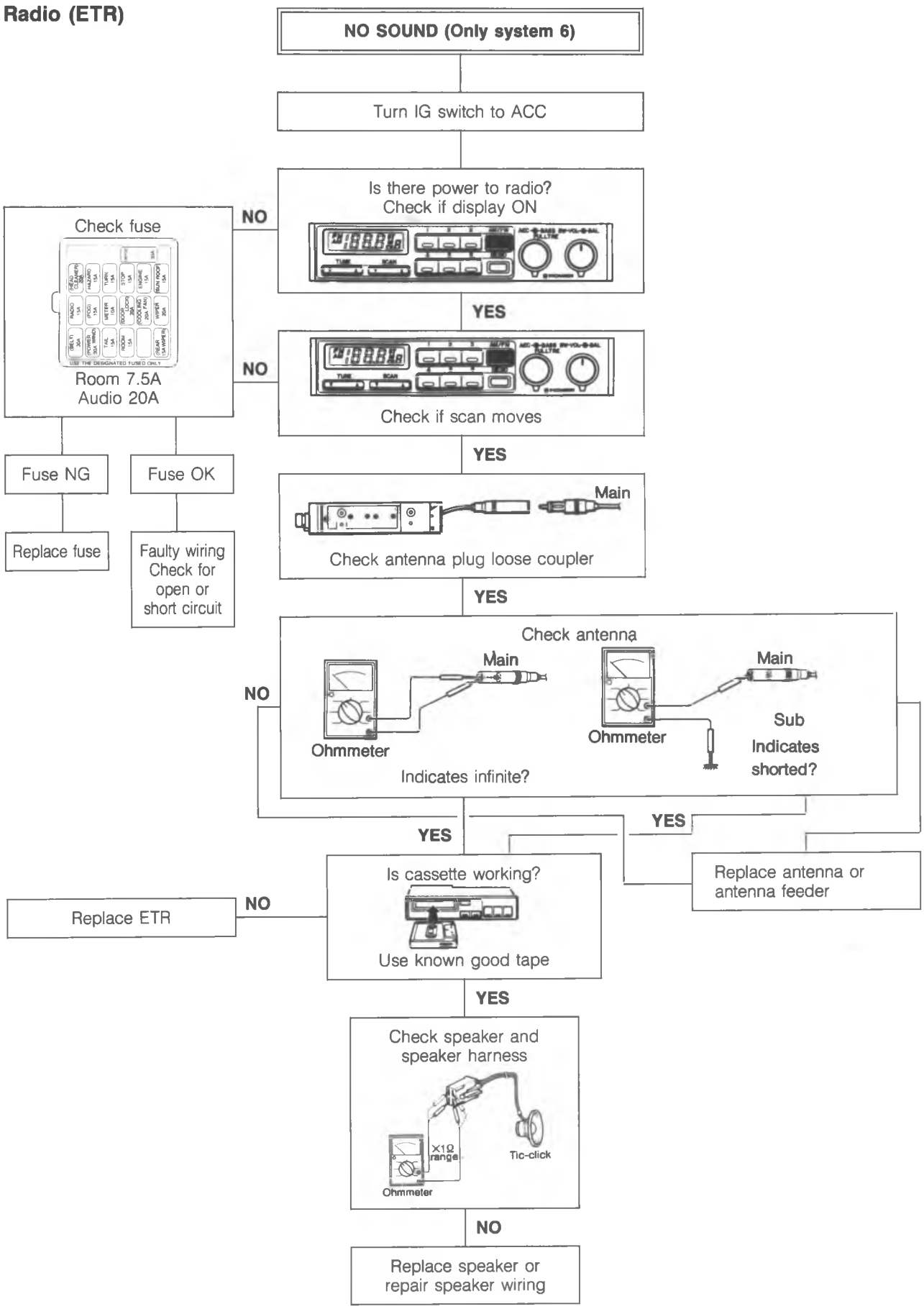

86U15X-186

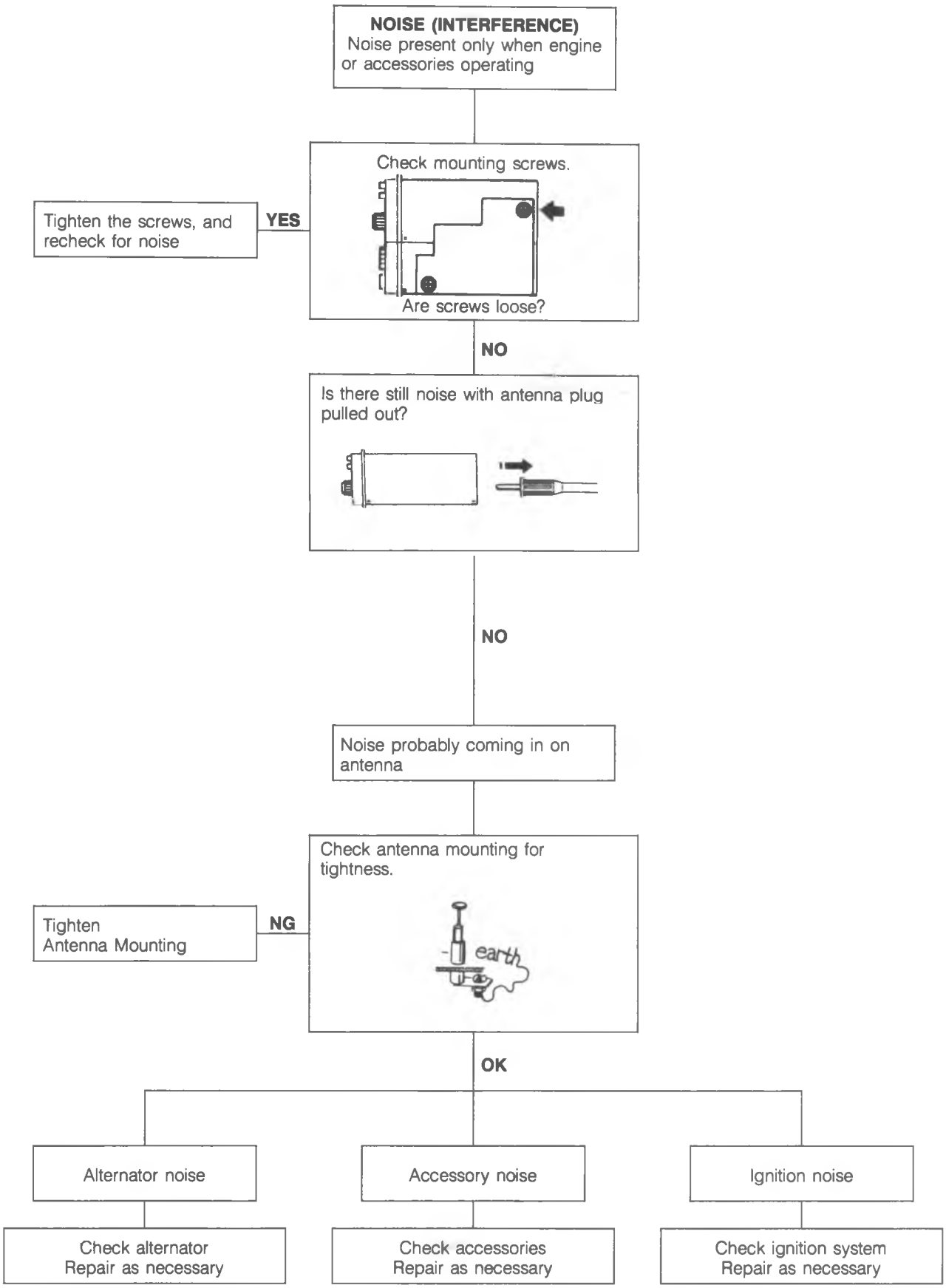
NOISE (INTERFERENCE)
Noise present only when engine or accessories operating
Check mounting screws.
Are screws loose?
YES
Tighten the screws, and recheck for noise
NO
Is there still noise with antenna plug pulled out?
NO
Noise probably coming in on antenna
Check antenna mounting for tightness.
earth
NG
Tighten Antenna Mounting
OK
Alternator noise
Accessory noise
Ignition noise
Check alternator Repair as necessary
Check accessories Repair as necessary
Check ignition system Repair as necessary

86U15X-187

POOR TONE QUALITY

Check for shorts in speaker harness.

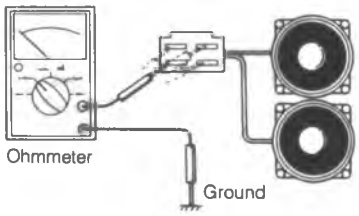

If circuit tester indicates infinite ohm when checking resistance between each speaker jack and car body, speaker harness is OK.

NG → Repair harness.

OK ↓

Check for objects lying on the speaker and rattling, or damage to speakers. Are speakers OK?

NO → Repair speakers.

YES ↓

Check antenna and lead-in for broken connectors.

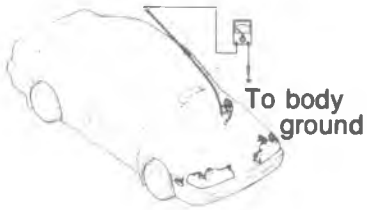

AM:
With engine off, tune to a station with a signal that is neither weak nor strong. Touch the antenna. (Other parts of body must not touch the car.)
Volume increases — Antenna is defective.
Volume decreases — All right.
Ohm meter indicates infinite ohm?

NG → Replace antenna.

Is radio broadcast or propagation cause of poor tone quality?

NO → Replace unit.

OK ↓

Check with known good antenna as specified

OK → Replace antenna

NG ↓

Check with known good pole antenna

OK → Replace antenna amplifier

NG ↓

86U15X-188

SCAN TUNING DOES NOT STOP

Check that antenna plug is fully inserted into audio system socket.

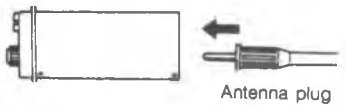

NG → Insert antenna plug fully into audio system socket.

OK →

Check antenna and lead-in for broken connectors.

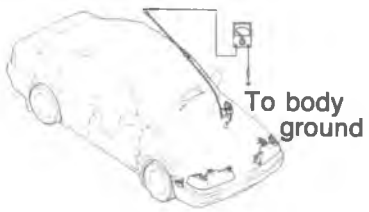

AM:
With engine off, tune to a station with a signal that is neither weak nor strong. Touch the antenna.
(Other parts of body must not touch the car.)
Volume increases — Antenna is defective.
Volume decreases — All right.
Ohm meter indicates infinite ohm?

NG → Replace antenna.

OK → Check with known good antenna as specified

OK → Replace antenna

NG → Check with known good pole antenna

OK → Replace antenna amplifier

NG → Replace unit.

NO DISPLAY OF FREQUENCY/PRESET MEMORY IS CANCELED

Check voltage between back-up lead and ground while turning ignition key on and off. Is the voltage higher than approx. 8 volt?

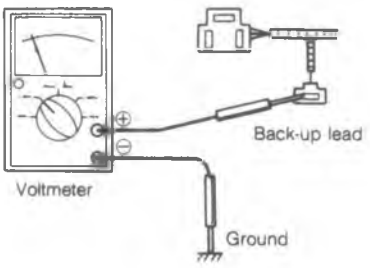

NO → Repair back-up circuit.

YES →

Check connection between output connector of power source and radio.

OK → Replace unit.

Note
When battery is discharged or radio is disconnected from battery for or during repair, all memory is canceled. You must preset stations again.

86U15X-189

Cassette Deck

POOR TONE QUALITY

Clean head, capstan and pinchroller.

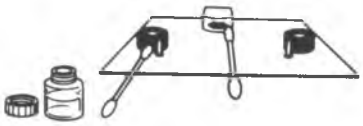

Use Allsop Head cleaner or equivalent.

NG → Check head, capstan and pinchroller for oxide and dirt buildup.

OK

Check with another tape.

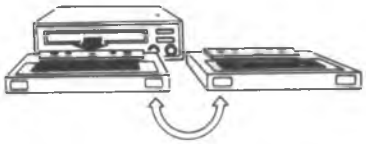

OK → Tape is defective. Change tapes.

NG

Check for shorts in speaker harness.

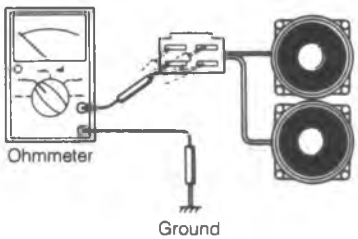

If ohmmeter indicates infinite ohm when checking value of resistance between each speaker jack and car body, speaker harness is OK.

NG → Repair harness.

OK

Check for objects lying on speaker and rattling, or damage to speaker(s). Are speakers OK?

NO → Repair speakers.

YES

Replace unit.

86U15X-190

UNIT GRABBING TAPE OR MARKING TAPE ("EATING" TAPE)

Check capstan and pinchroller for oxide and dirt buildup.

NG → Clean head, capstan and pinchroller.

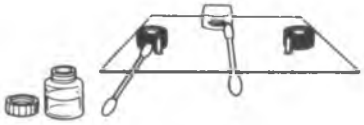

Use Allsop Head cleaner or equivalent.

OK

Check for loose tape in cassette.

NG → Tighten tape using a pen or pencil.

OK

Check that 120-minute cassette tape or longer tape is not used.

USED → Use 30-, 60- or 90-minute tapes.

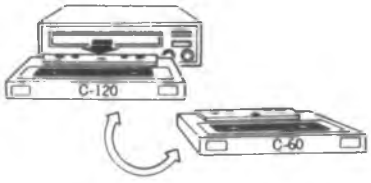

It is recommended that only 46-, 60-, or 90-minute cassette tapes be used, because 120-minute cassette tape is very thin and delicate.

NOT USED

Check with another tape.

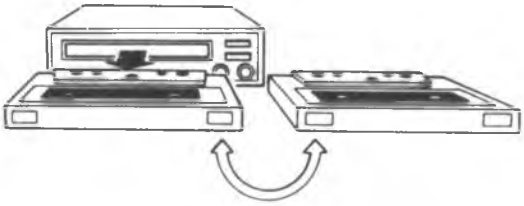

NG → Replace unit.

OK → Tape is defective. Change tapes.

86U15X-191

COMPACT DISC PLAYER

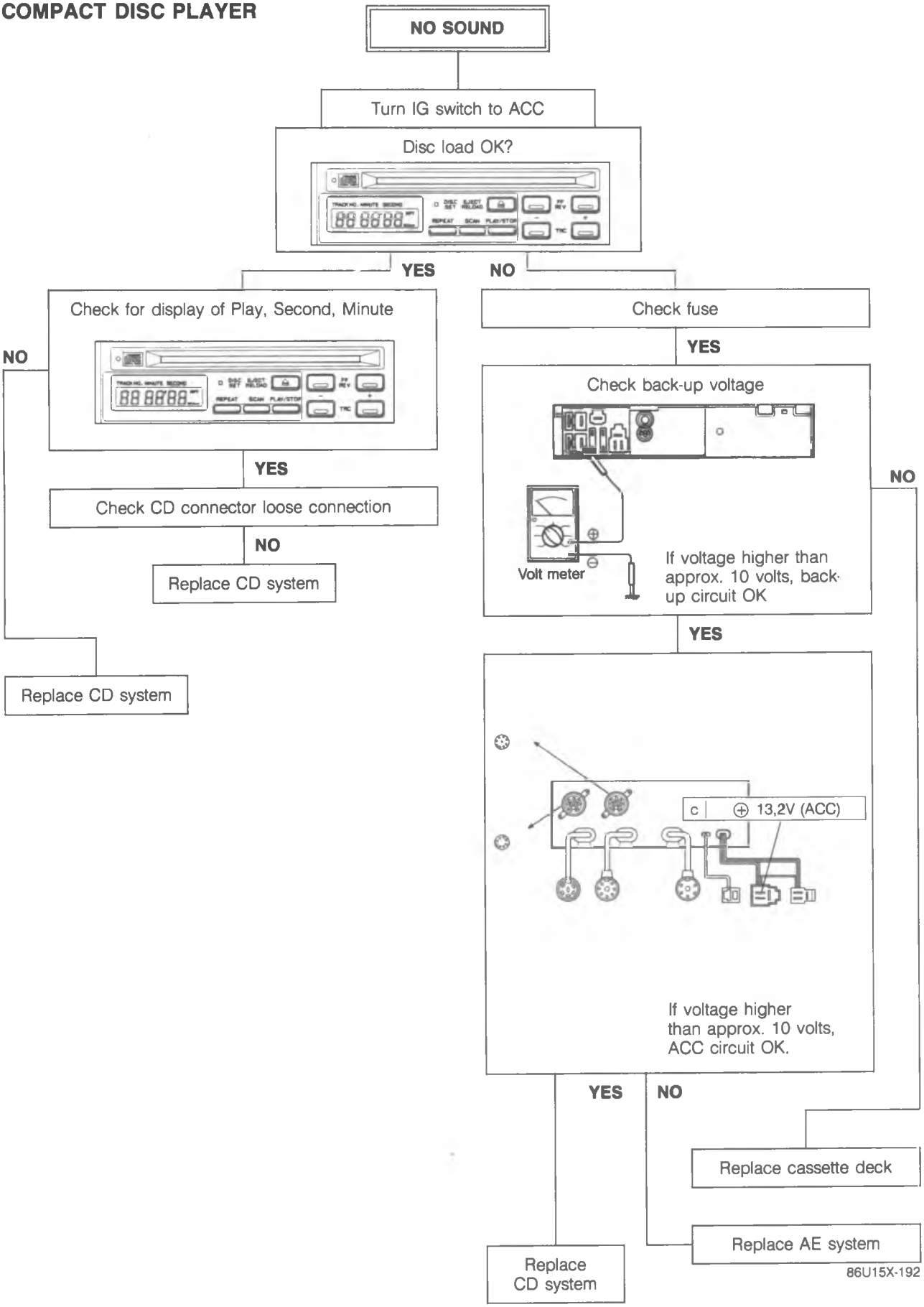

POWER ANTENNA STRUCTURAL VIEW

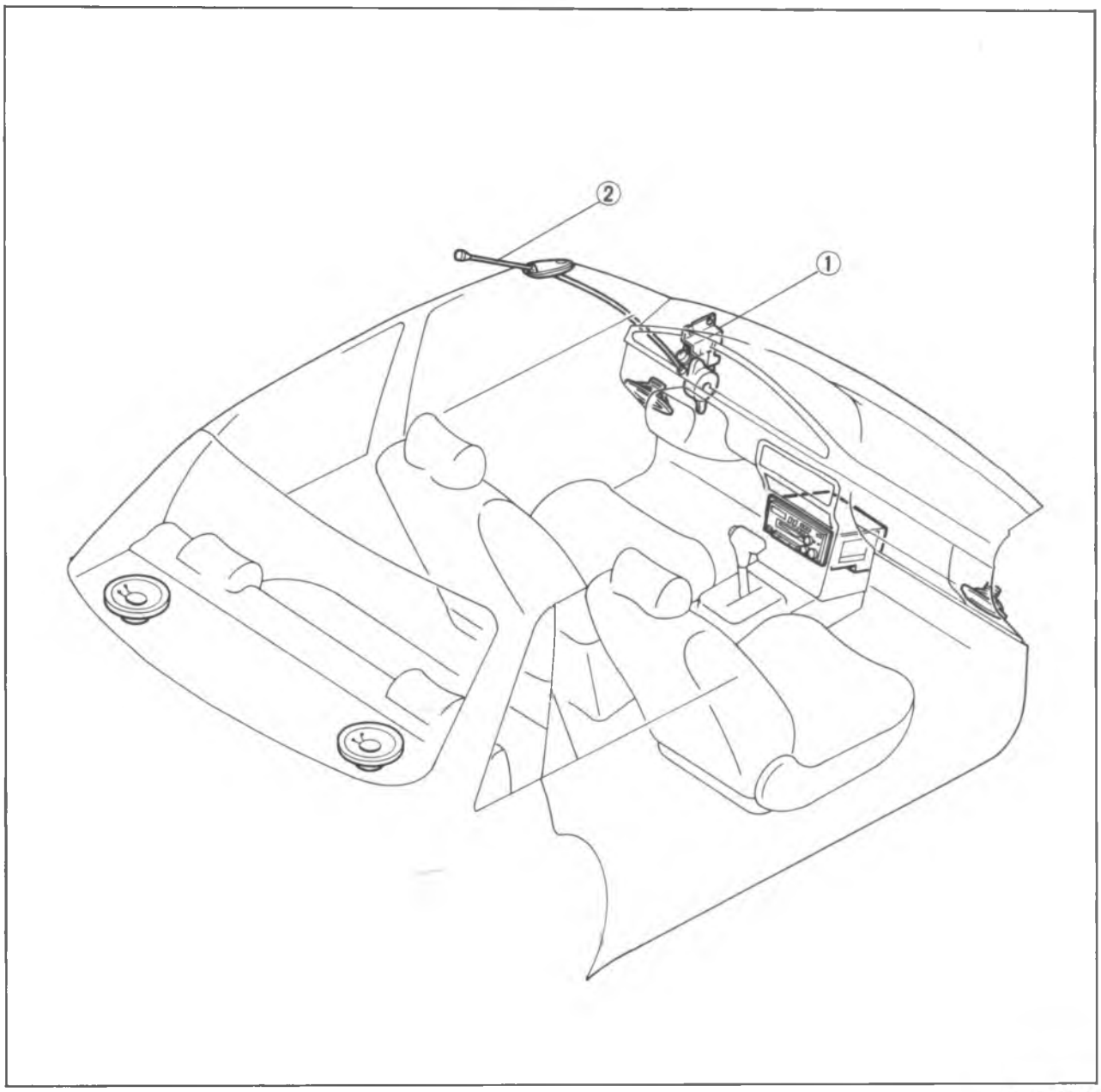

86U15X-193

1. Antenna motor
2. Antenna

Power Antenna Circuit

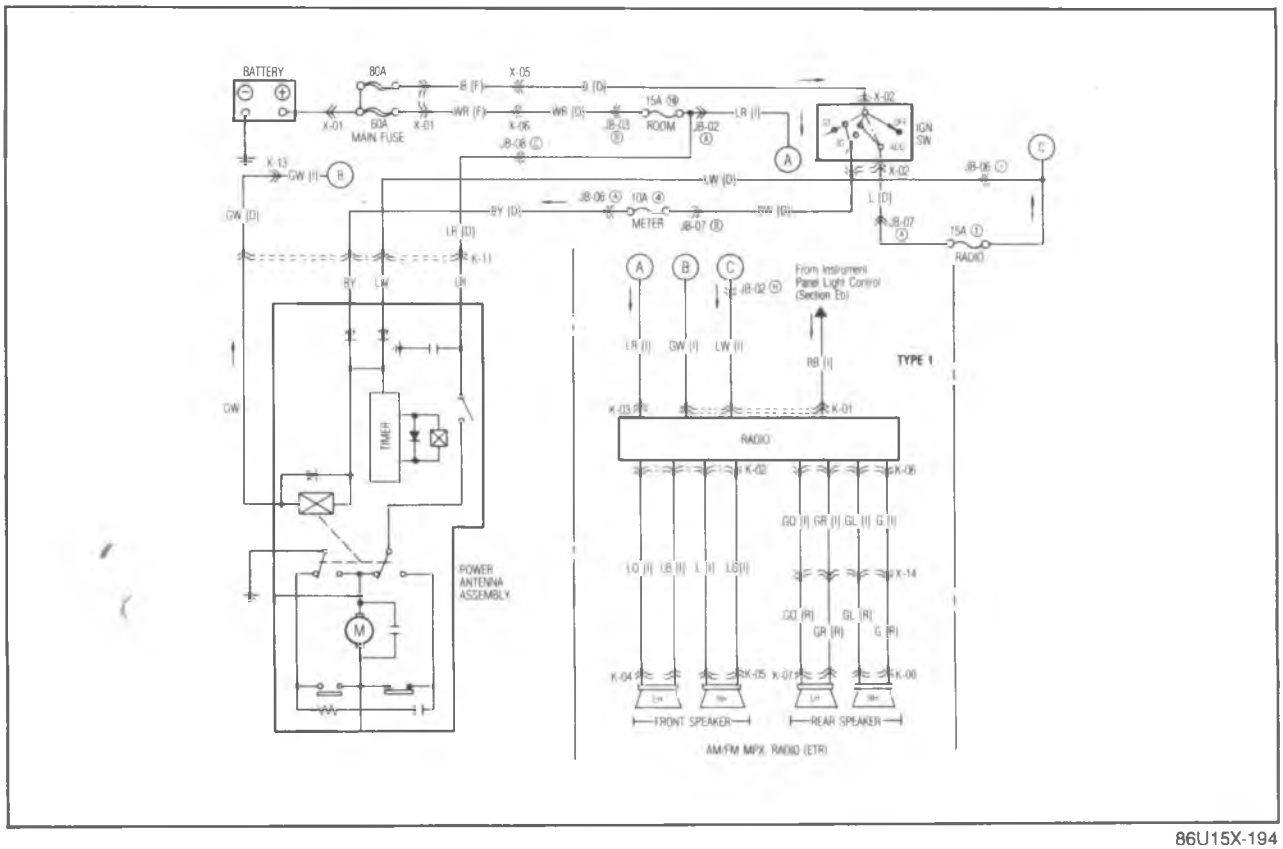

86U15X-194

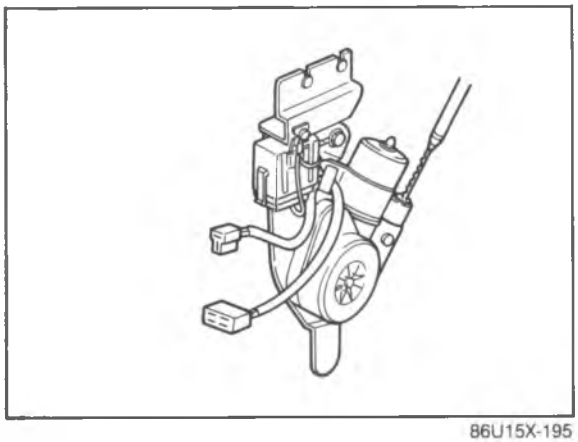

86U15X-195

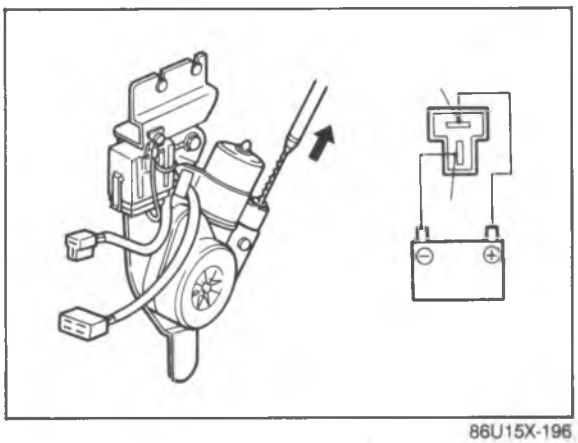

86U15X-196

Inspection Of Power Antenna Relay

1. Check the voltage at each terminal of the relay connector harness side with each condition.

Terminal	Condition	Voltage
LW	Ignition switch ACC	12V
BY	Ignition switch ON	12V
GW	Ignition switch ACC and radio power switch ON	0V
LR	Any time	12V

If not, repair the harness.

2. Turn the ignition switch on, and check the operation of the power antenna with each condition.

Condition	Antenna operation
GW wire is connected to a body ground	Rises
GW wire is not connected to a body ground	Goes down

If the power antenna does not operate, replace the power antenna relay or power antenna motor.

HEATER

STRUCTURAL VIEW

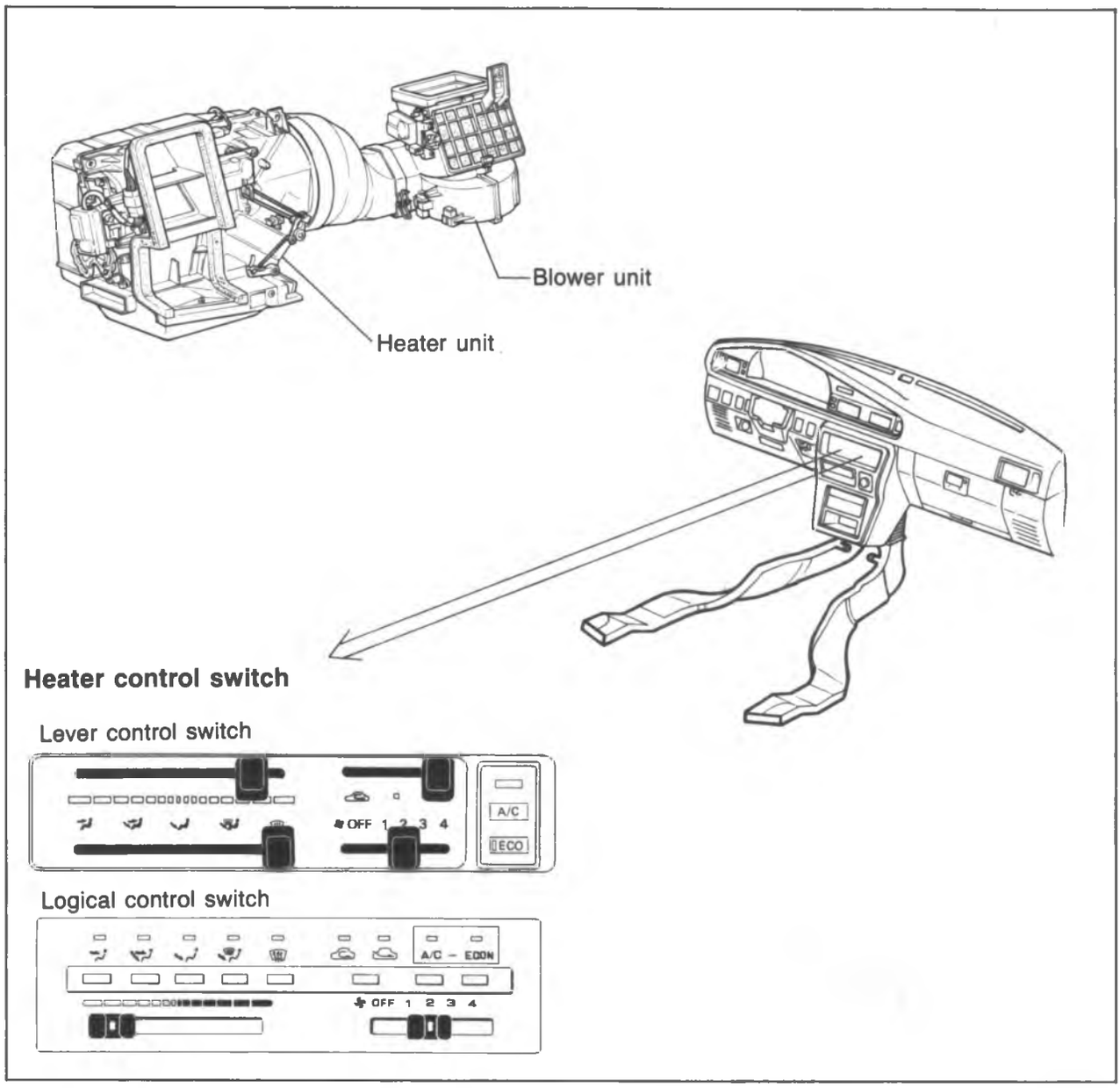

86U15X-197

AIR FLOW AT EACH MODE

VENT mode

Type A

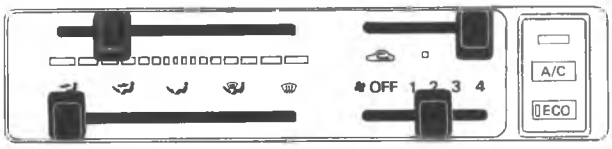

Type B

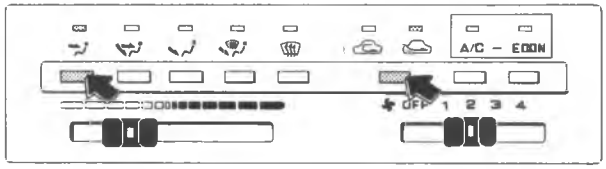

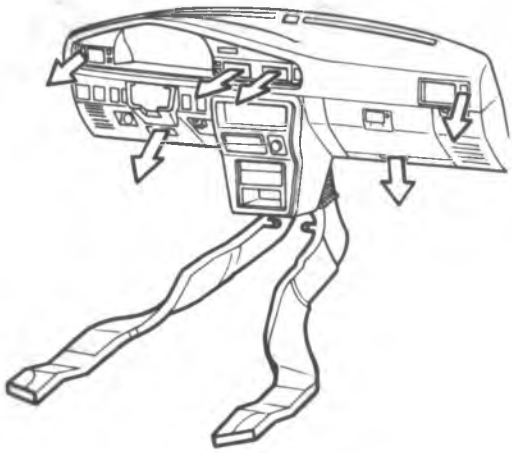

⇨ Fresh air

86U15X-198

BI-LEVEL model

Type A

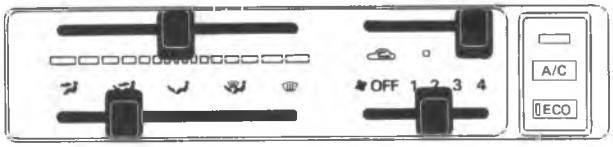

Type B

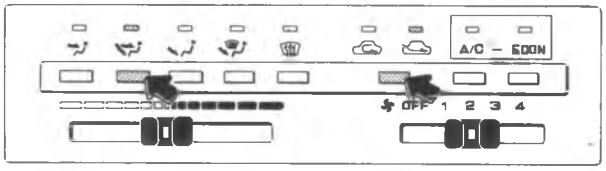

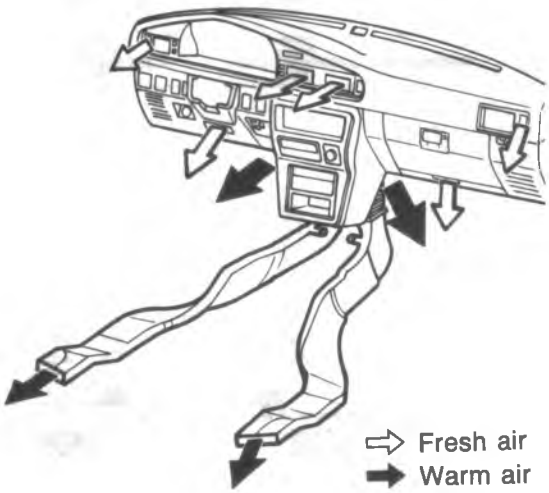

⇨ Fresh air
➡ Warm air

86U15X-199

HEAT mode

Type A

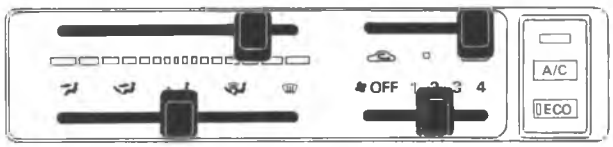

Type B

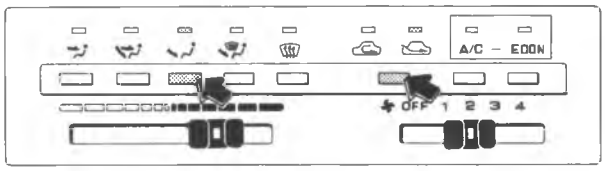

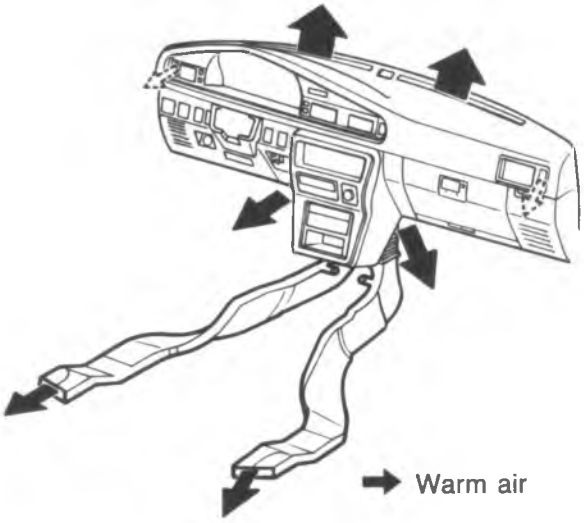

86U15X-200

HEAT/DEF mode

Type A

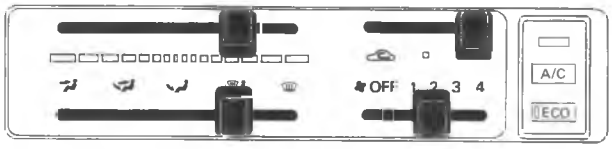

Type B

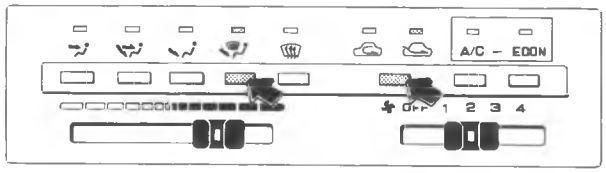

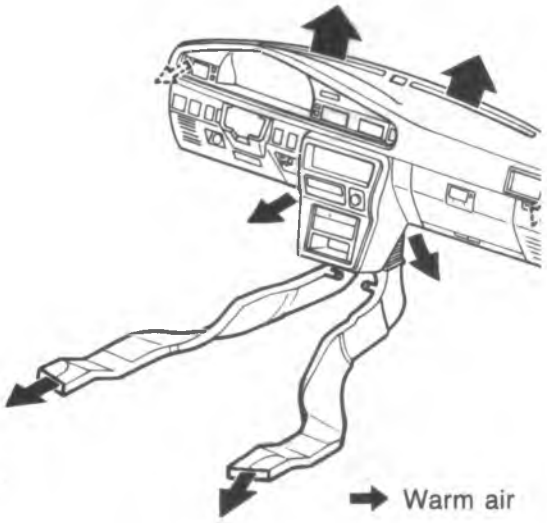

86U15X-201

DEF mode

Type A

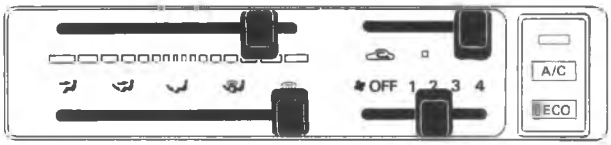

Type B

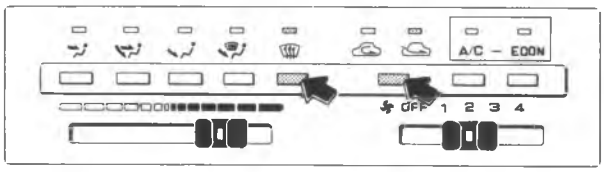

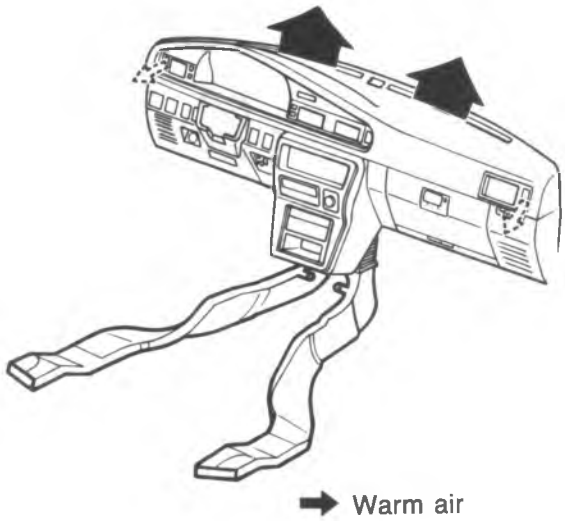

86U15X-202

RATE OF AIR FLOW

MODE	AIR	VENT OPEN	DEF OPEN	HEAT OPEN
VENT	FRESH	100%	—	—
BI-LEVEL	1/2 warm	50%	—	50%
HEAT	WARM	—	20%	80%
DEFROSTER/HEAT	WARM	—	50%	50%
DEFROSTER	WARM	—	100%	—

LEVER CONTROL TYPE

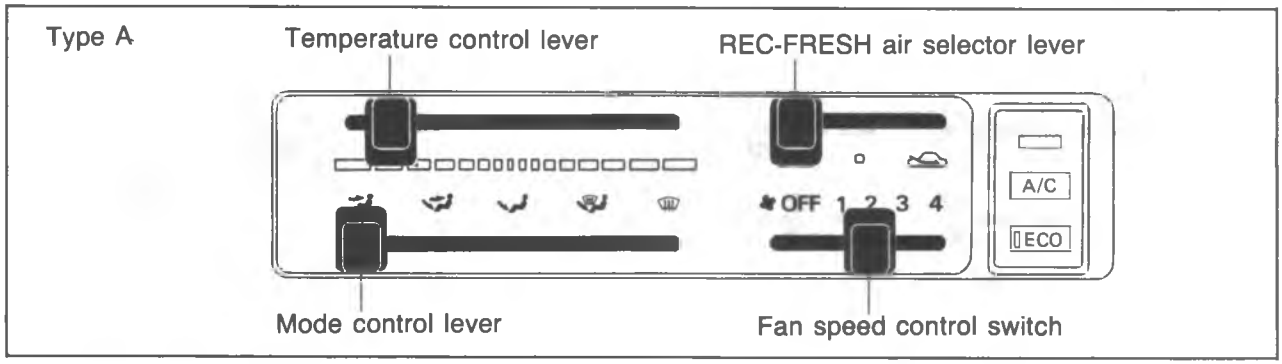

69G15X-203

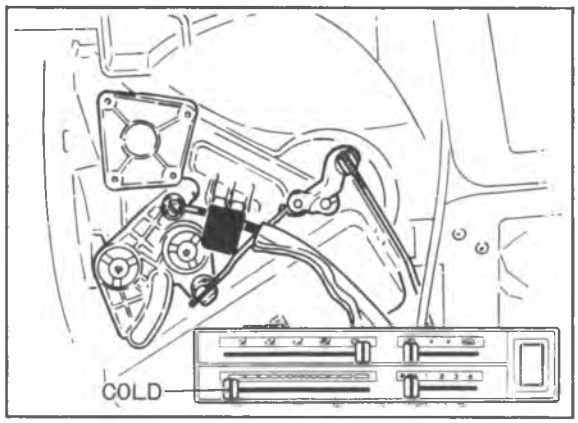

86U15X-203

Adjustments

Air-mix door control wire

1. Set temperature control lever at MAX-COLD position.
2. Connect and clamp the control wire with the shutter lever on the heater unit all the way to the right side.

Caution

Move the temperature control lever to be sure the wire is attached. Also, be sure it can move the full stroke between HOT and COLD.

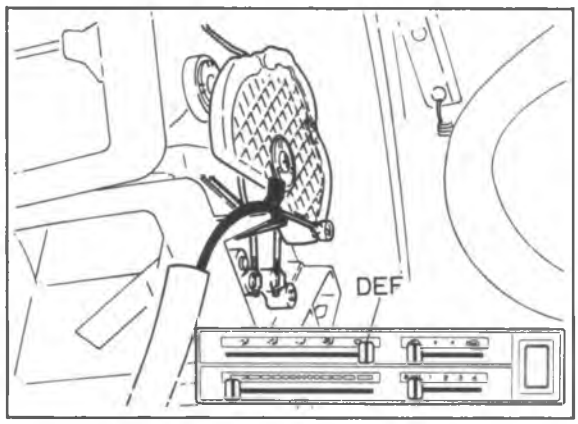

86U15X-204

Mode control wire

1. Set mode control lever to DEF position.
2. Connect and clamp the control wire with the shutter lever on the heater unit at its closest point.

Caution

Move the mode lever to be sure the wire is attached. Also, be sure it can move the full stroke between DEF and VENT.

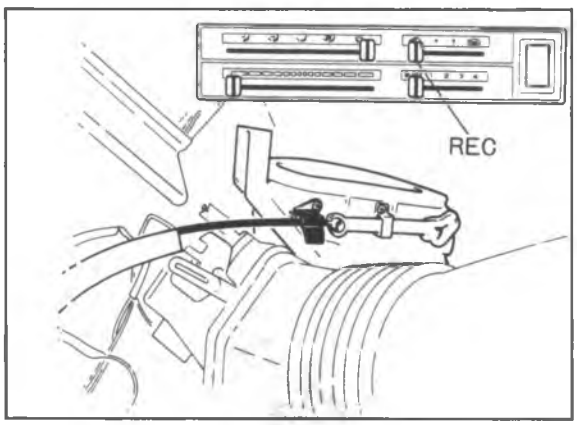

86U15X-205

REC-FRESH air selector wire

1. Set the selector lever to REC position.
2. Connect and clamp the control wire with the shutter lever on the blower unit at its closest point.

Caution

Move the rec-fresh lever to be sure the wire is attached. Also, be sure it can move the full stroke between REC and FRESH.

LOGICAL CONTROL TYPE

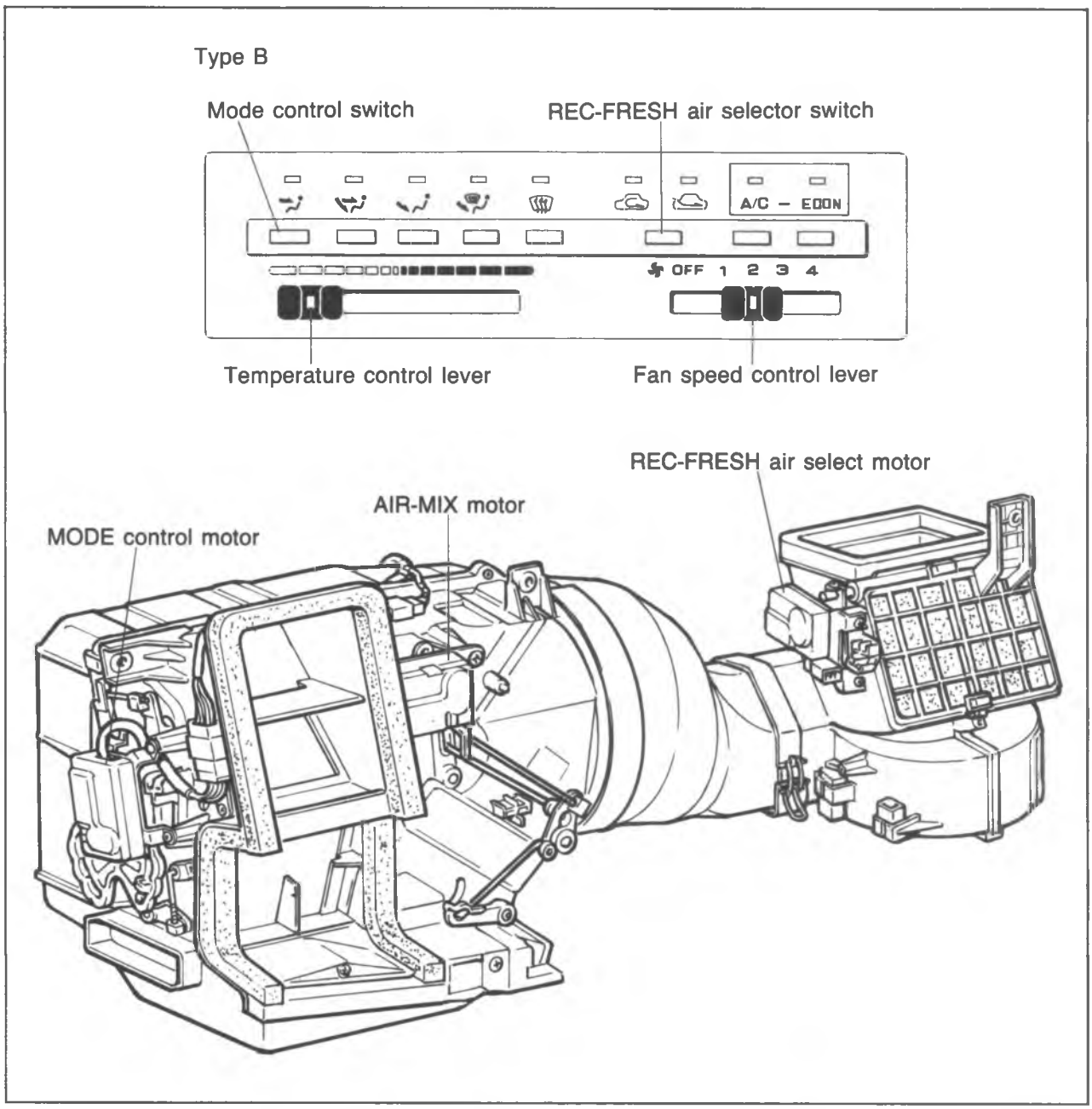

69G15X-207

Outline of Components

Part Name	Description
Logical control switch	One-touch, push type, mode control switch
MODE control motor	Controls air outlet for each mode Drives VENT, HEAT and DEF doors
AIR MIX motor	Controls air outlet temperature by operating the air mix doors
REC-FRESH air select motor	Controls intake air by driving the rec-fresh air select door

Circuit Diagram

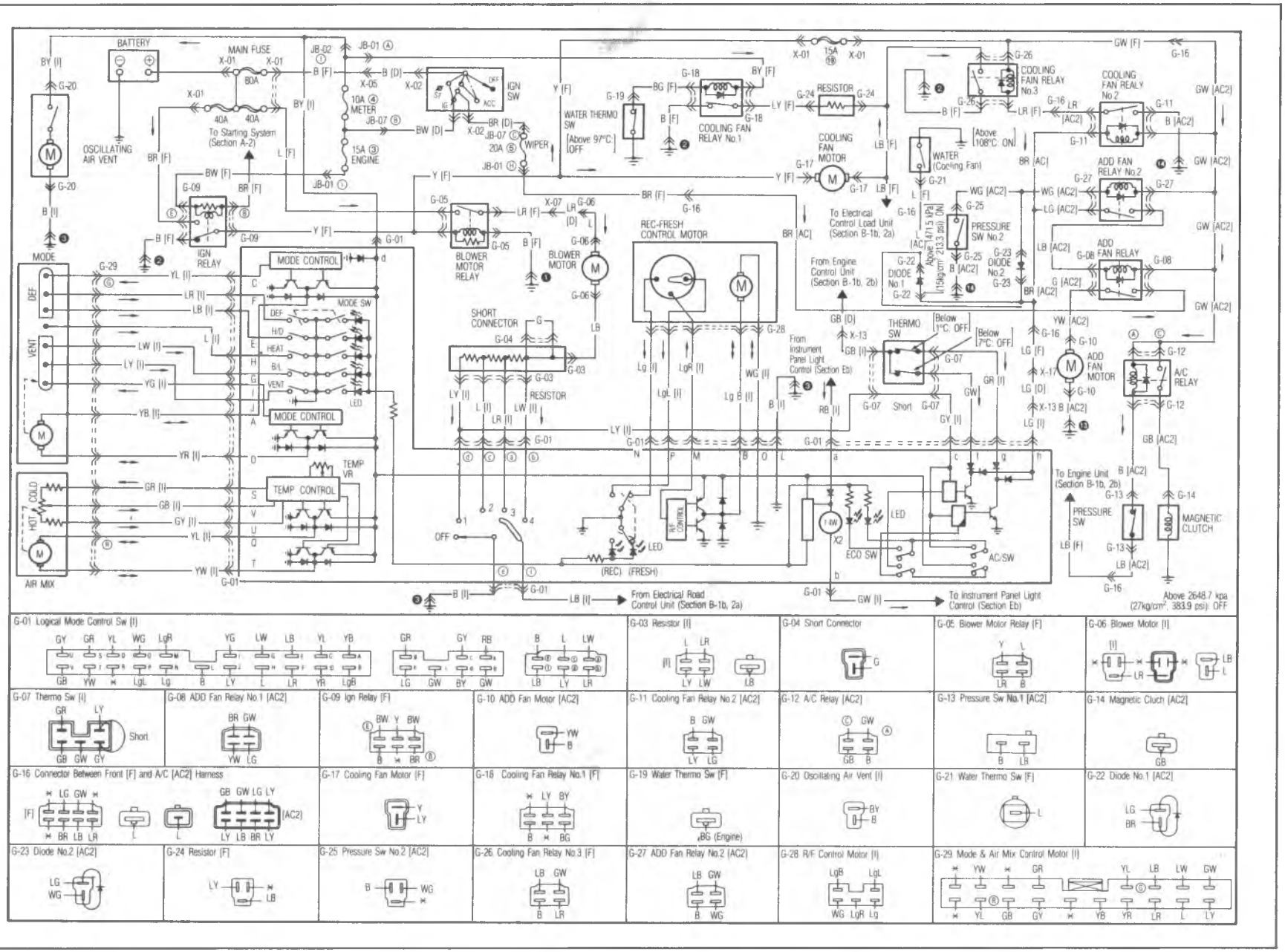

LOGICON SWITCH
Inspection

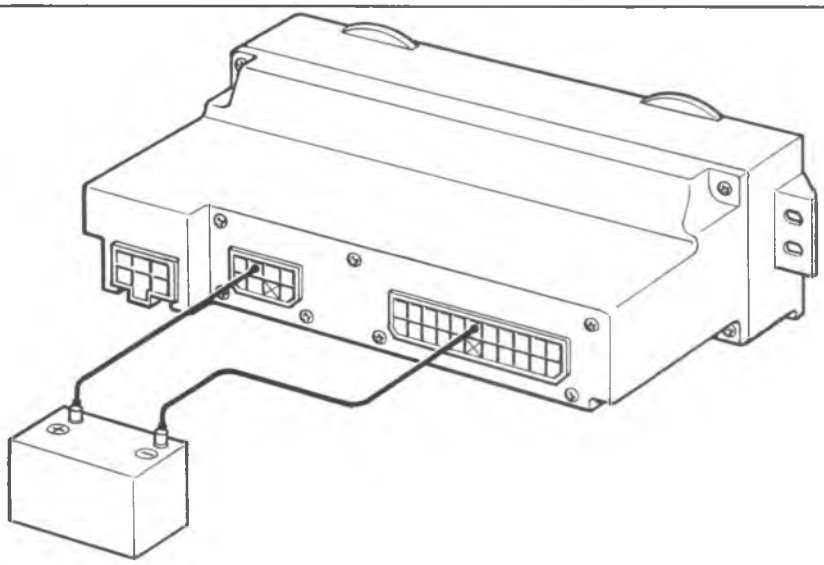

Note
a) Remove the logicon switch from the vehicle.
b) Supply 12V as shown in the figure.
c) Check each circuit.

86U15X-207

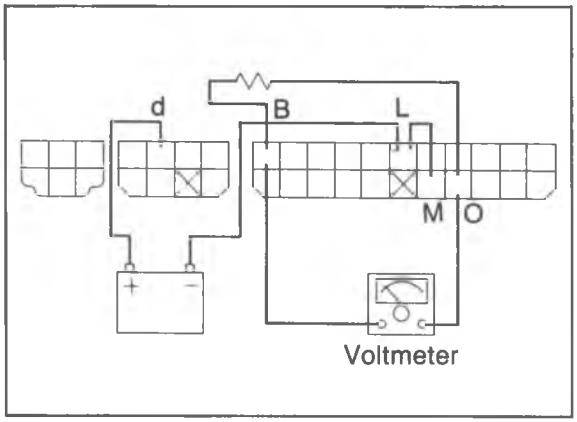

86U15X-208

Checking REC-FRESH Air Selector Circuit

1. Connect a jumper wire between M terminal and L terminal.
   Connect a resistance (at least 1 kΩ) between B terminal and O terminal, and check the voltage between these terminals using a voltmeter.

Terminals	Voltage
B — O	Approx. 12V

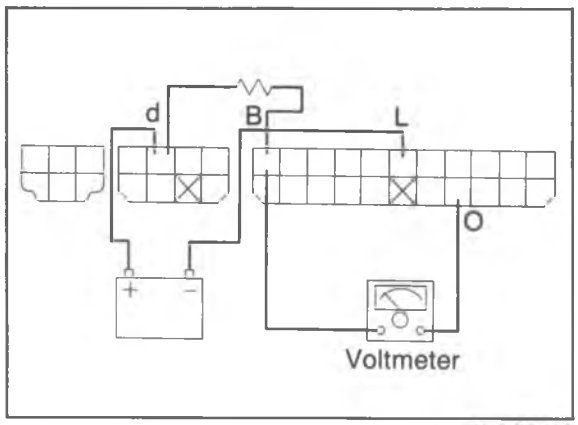

86U15X-209

2. Connect a resistance (at least 1 kΩ) between d terminal and B terminal, and check the voltage between d terminal and O terminal using a voltmeter.

Terminals	Voltage
B — O	Less than 1V

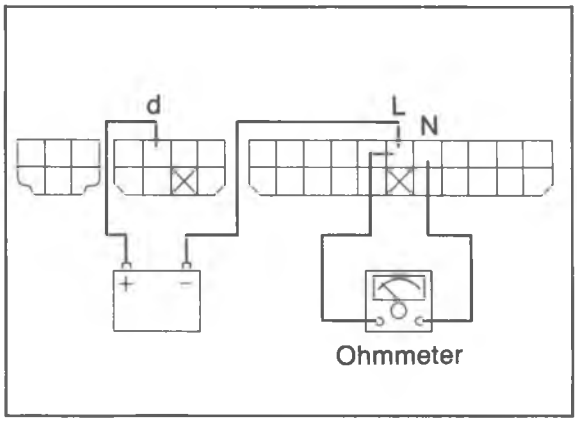

86U15X-210

3. Check for continuity between N terminal and L terminal with the REC-FRESH selector switch in FRESH position (out) using an ohmmeter.

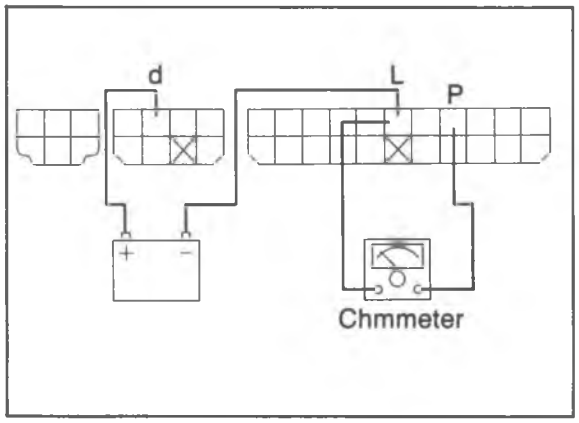

86U15X-211

4. Check for continuity between P terminal and L terminal with the REC-FRESH air selector switch in REC position (in) using ohmmeter.

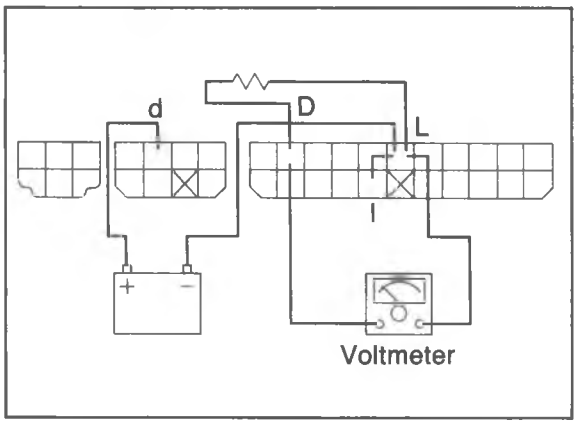

86U15X-212

Checking Mode Control Circuit

1. Connect a jumper wire between I terminal and L terminal.
   Connect a resistance (at least 1 kΩ) between D terminal and L terminal, and check the voltage between these terminals using a voltmeter.

Terminals	Voltage
D — L	Approx. 12V

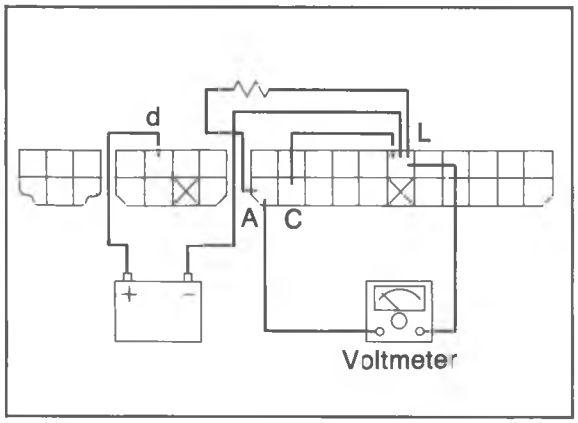

86U15X-213

2. Connect a jumper wire between C terminal and L terminal.
   Connect a resistance (at least 1 kΩ) between a terminal and L terminal, and check the voltage between these terminals using a voltmeter.

Terminals	Voltage
a — L	Approx. 12V

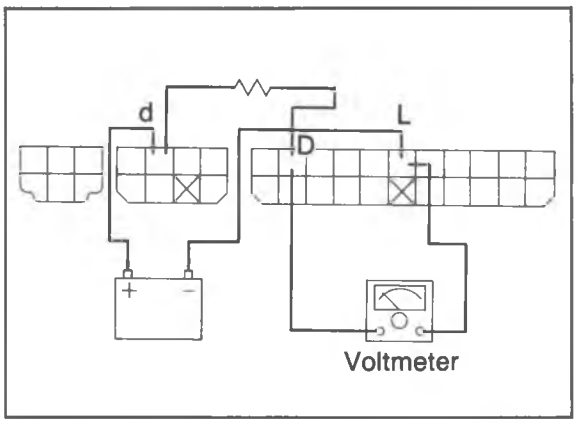

86U15X-214

3. Connect a resistance (at least 1 kΩ) between d terminal and D terminal, and check the voltage between D terminal and L terminal using a voltmeter.

Terminals	Voltage
D — L	Less than 1V

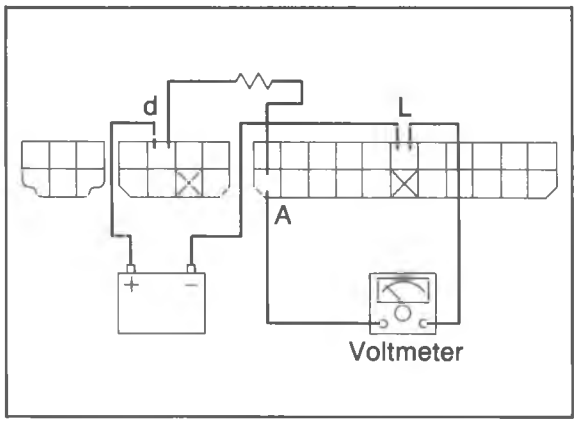

86U15X-215

4. Connect a resistance (at least 1 kΩ) between d terminal and A terminal, and check the voltage between A terminal and L terminal using a voltmeter.

Terminal	Voltage
A — L	Less than 1V

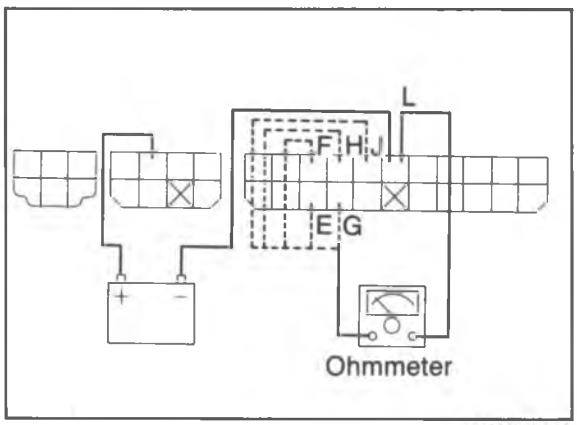

86U15X-216

5. Check for continuity between each terminal with following condition using an ohmmeter.

Condition	Terminals	Continuity
Push the VENT switch	J — L	Yes
Push the B/L switch	G — L	Yes
Push the HEAT switch	H — L	Yes
Push the H/D switch	E — L	Yes
Push the DEF switch	F — L	Yes

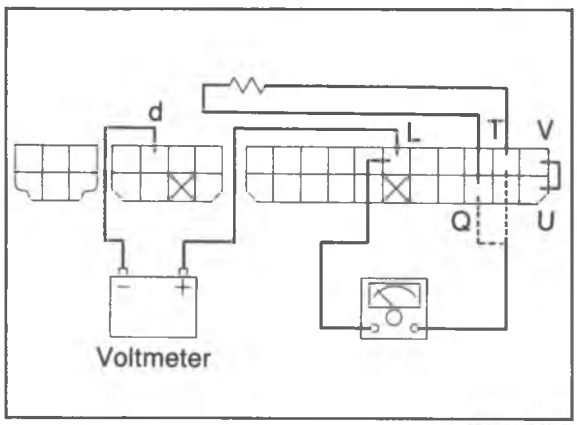

86U15X-217

Checking Air Mix Control Circuit

1. Connect a resistance (at least 1 kΩ) between Q terminal and T terminal.
   Set temperature control lever to center position between MAX HOT and MAX COLD.
   Connect a jumper wire between V terminal and U terminal, and check the voltage between each terminals.

Terminals	Voltage
T — L	Approx. 12V
Q — L	Less than 1V

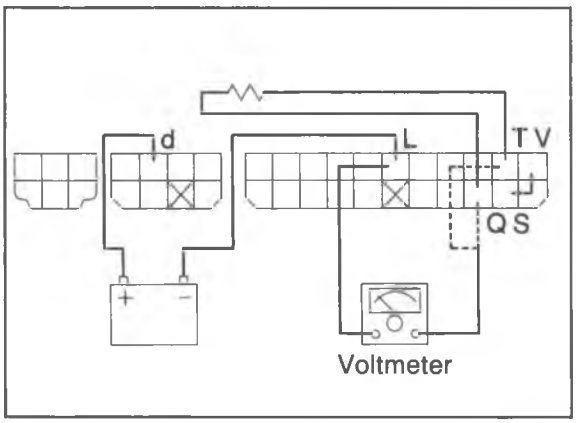

86U15X-218

2. Connect a resistance (at least 1 kΩ) between Q terminal and T terminal.
   Set temperature control lever to center position between MAX HOT and MAX COLD. Connect a jumper wire between V terminal and S terminal, and check the voltage between each terminal using a voltmeter.

Terminals	Voltage
Q — L	Approx. 12V
T — L	Less than 1V

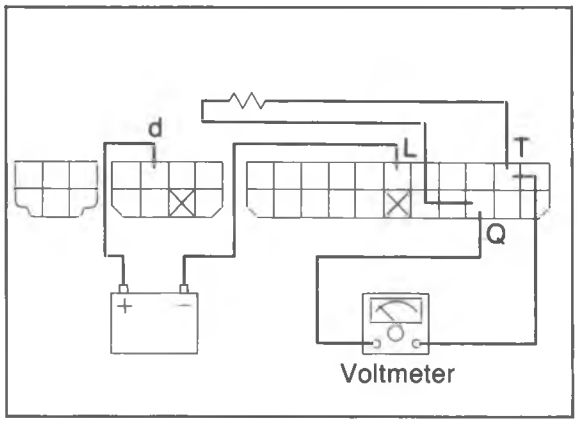

86U15X-219

3. Connect a resistance (at least 1 kΩ) between Q terminal and T terminal.
   Set temperature control lever to MAX HOT, and check that Q terminal voltage is higher than terminal t voltage.

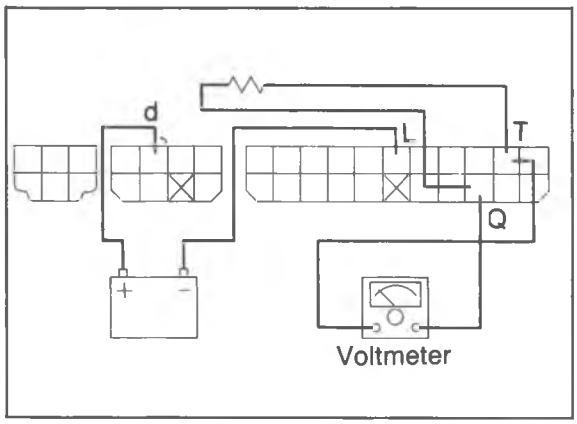

86U15X-220

4. Connect a resistance (at least 1 kΩ) between Q terminal and terminal t.
   Set temperature control lever to MAX COLD, and check that T terminal voltage is higher than Q terminal voltage.

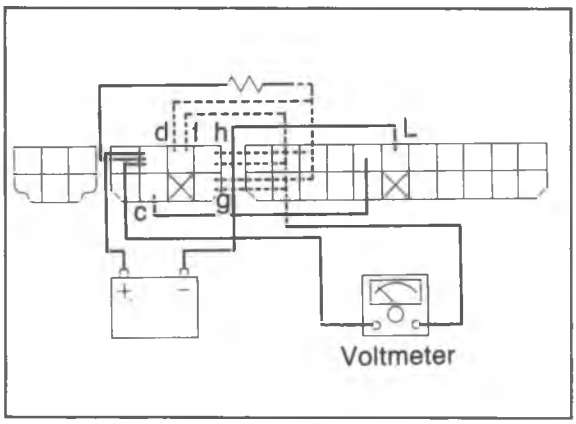

86U15X-221

Checking A/C Switch and ECO Switch Circuit

1. Turn the A/C switch off.
   Connect a jumper wire between terminal c and terminal L.
   Connect a resistance (at least 1 kΩ) between each terminals, and check the voltage between these terminals.

Terminals	Voltage
d — g	0V
d — f	0V
d — h	0V

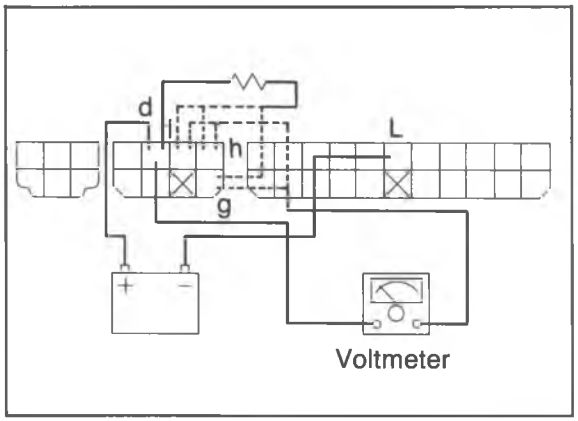

86U15X-222

2. Turn the A/C switch on.
   Connect a resistance (at least 1 kΩ) between each terminal, and check the voltage between these terminals.

Terminals	Voltage
d — g	0V
d — f	0V
d — h	0V

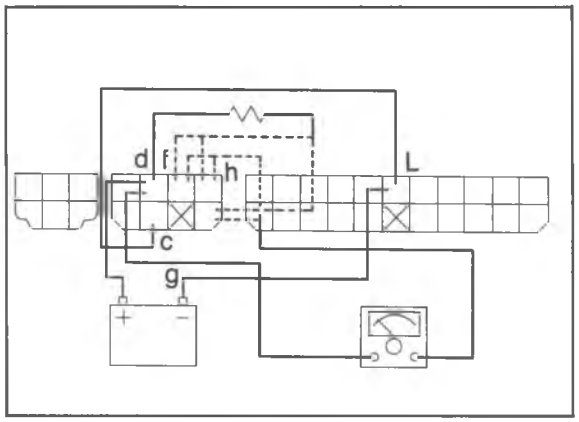

86U15X-223

3. Turn the A/C switch on and the ECO switch off.
   Connect a jumper wire between terminal c and L terminal.
   Connect a resistance (at least 1 kΩ) between each terminals, and check the voltage between these terminals.

Terminals	Voltage
d — g	0V
d — f	Approx. 12V
d — h	Approx. 12V

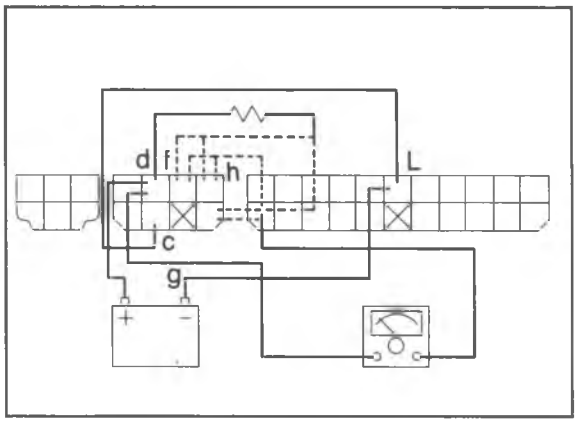

86U15X-224

4. Turn the A/C switch and the ECO switch on.
   Connect a jumper wire between terminal c and L terminal.
   Connect a resistance (at least 1 kΩ) between each terminal, and check the voltage between these terminals.

Terminals	Voltage
d — g	Approx. 12V
d — f	0V
d — h	Approx. 12V

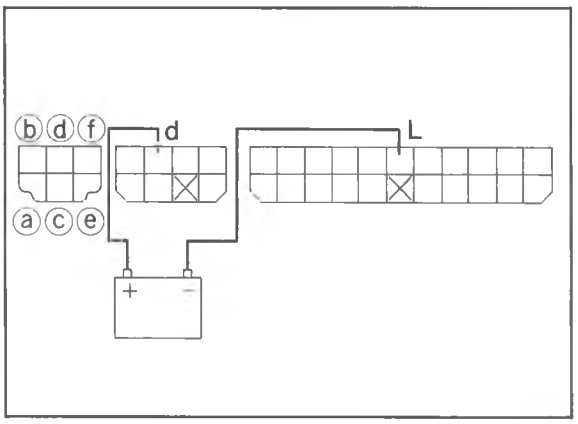

86U15X-225

Checking Fan Speed Control Lever

Check for continuity between each terminal of 6 pin connector.

Fan switch condition	ⓐ	ⓑ	ⓒ	ⓓ	ⓔ	ⓕ
OFF						
1				○	○	
2			○		○	
3		○			○	○
4	○				○	○

○——○: indicates continuity

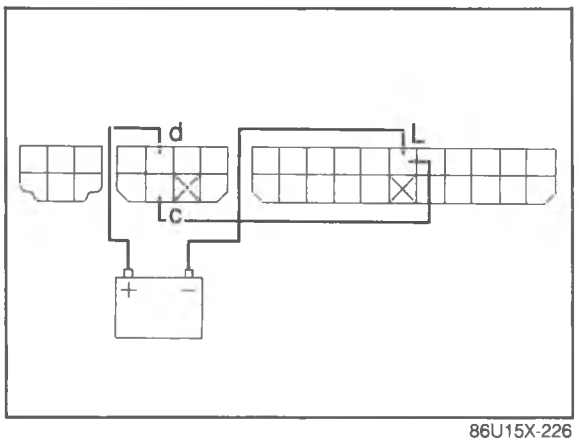

86U15X-226

Checking Dim Indicator Circuits (Indicator circuit)

1. Connect a jumper wire between terminal c and terminal L.
   Check for illumination at A/C switch indicator with A/C switch on.
   Check for illumination at ECO switch indicator with ECO switch on.

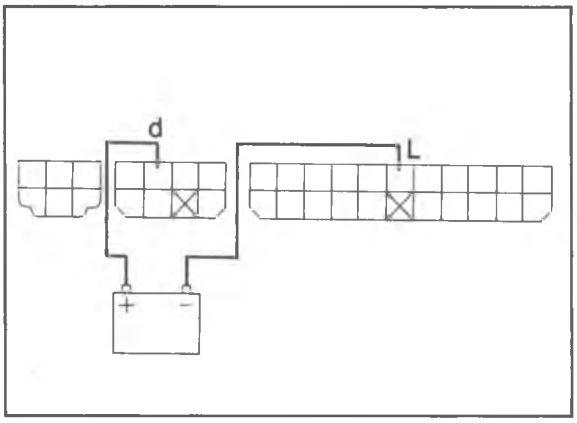

86U15X-227

2. Check that the mode control switch and REC-FRESH select switch indicators when the respective switches ON.

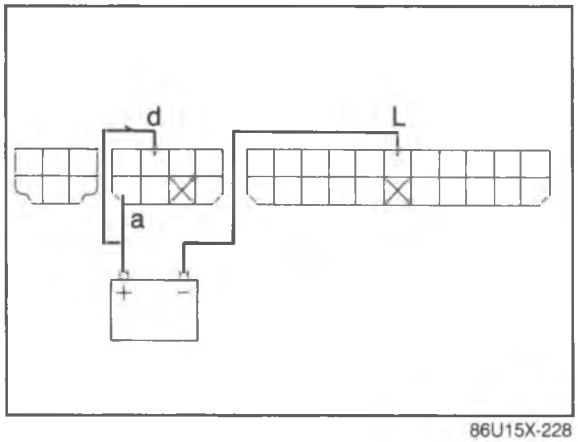

86U15X-228

3. Apply 12V to terminal a, and check that the indicators are dim.

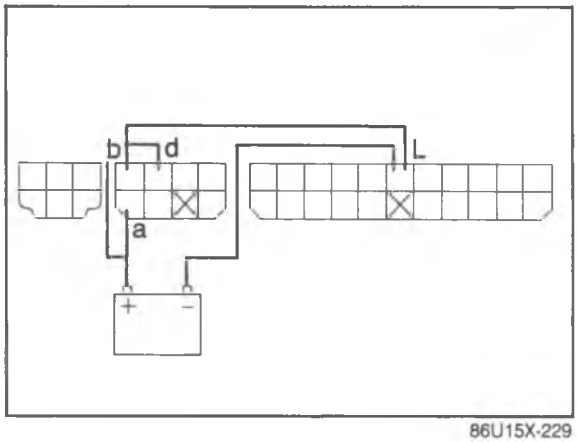

86U15X-229

Checking Illumination Circuit

1. Connect a jumper wire between terminal b and terminal L.
2. Apply 12V to terminal a, and check that the indicators are dim.

THEFT-DETERRENT SYSTEM

STRUCTURAL VIEW

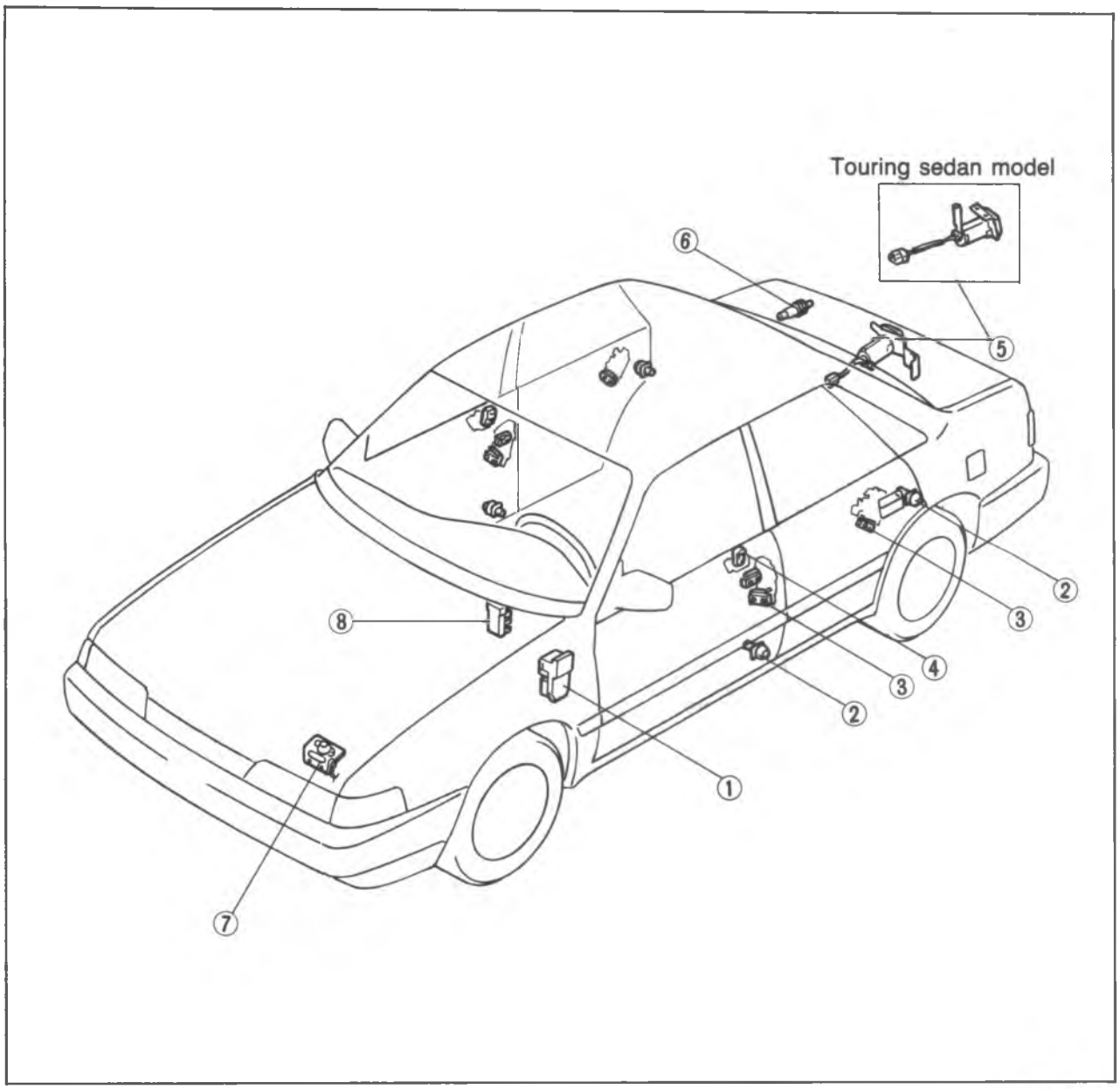

86U15X-230

1. Control unit (in the CPU)
2. Door switch
3. Lock link switch
4. Door key cylinder switch
5. Back door key cylinder switch
6. Back door switch
7. Hood switch
8. Starter cut relay

CIRCUIT DIAGRAM

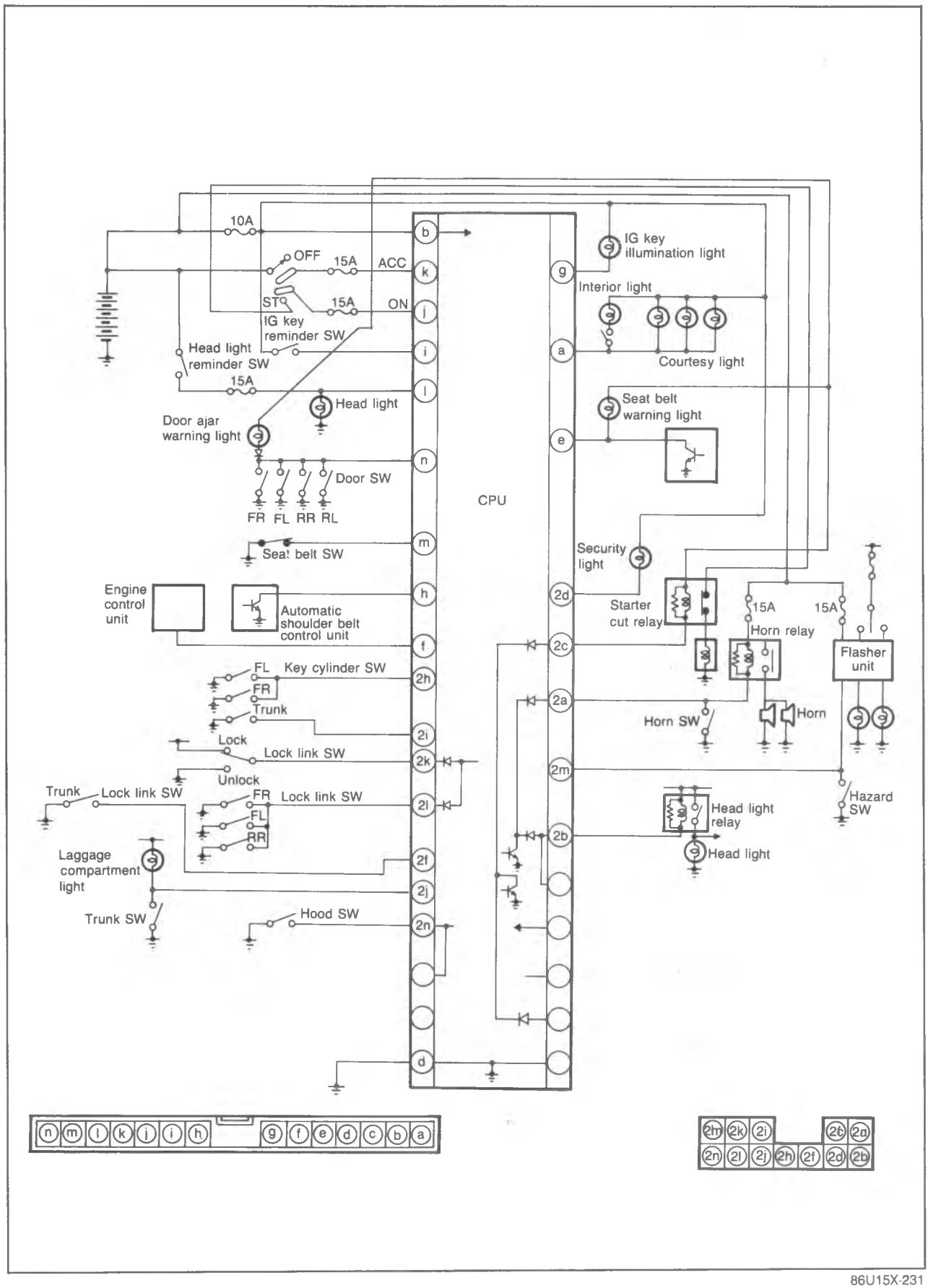

86U15X-231

TROUBLE SHOOTING

Control unit check

No	Procedure	Result
1	Open door A* window, and remove ignition key.	
2	Open door A, and lock all door lock knobs.	Security light: door locked Chime: door locked
3	Lock door A without key.	Security light: 10 sec 5 sec 3 sec
4	Open trunk (MX-6 or sedan) or door E (touring sedan) with key.	
5	Unlock door A lock knob.	Horn sounds intermittently. Head lights and hazard lights flash.
6	Turn ignition switch to START	Starter does not operate.
7	Turn door A key cylinder to "unlock"	
8	Remove STOP fuse, and retest steps 1, 2, 3, and 5	Head lights and hazard lights flash for 5 min.

NG

Replace control unit

OK

Go to page 15—142 for MX-6 model
page 15—143 for sedan model
page 15—144 for touring sedan model

* Door guide

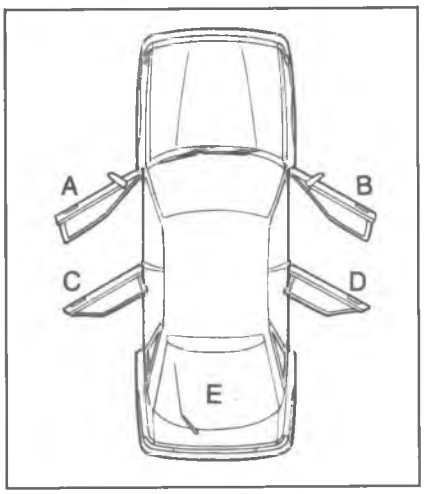

86U15X-253

MX-6 model

Control unit check (Refer to page 15—141)

OK

* Door guide

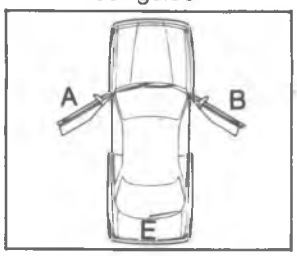

No	Procedure	Result			Action
		Security light	Chime	Interior light	
1	Turn ignition switch OFF. Open door A*	OFF	⎍⎍⎍⎍..	⎍	Repair key-less switch. (Open circuit)
2	Remove ignition key.	OFF	OFF	⎍	Repair key-less switch. (Short circuit)
3	Sit in drivers seat with door A open. Lock door A and B lock knobs.	⎍	OFF	⎍	
4	Unlock and lock door A lock knob.	⎍	⎍	⎍	Repair door A lock link switch.
5	Unlock and lock door B lock knob.	⎍	⎍	⎍	Repair door B lock link switch.
6	Unlock door A and B lock knobs	OFF	OFF	⎍	
7	Pull hood release lever.	⎍	OFF	⎍	Repair hood switch.
8	Pull trunk release lever.	⎍	OFF	⎍	Repair trunk switch.
9	Remove key and exit vehicle.	OFF	OFF	⎍	
10	Close door A.	OFF	OFF	OFF	Repair door A switch.
11	Turn door A key cylinder to "unlock" and hold in position.	⎍	OFF	OFF	Repair door A key cylinder switch.
12	Remove key.	OFF	OFF	OFF	
13	Turn door E (trunk) key cylinder to "unlock" and hold in position.	⎍	OFF	OFF	Repair trunk key cylinder switch.
14	Remove key.	OFF	OFF	OFF	
15	Close trunk.	OFF	OFF	OFF	
16	Turn door B key cylinder to "unlock" and hold in position.	⎍	OFF	OFF	Repair door B key cylinder switch.
17	Remove key.	OFF	OFF	OFF	
18	Open door B.	OFF	OFF	⎍	Repair door B switch.
19	Close door B.	OFF	OFF	OFF	
20	Close hood.	OFF	OFF	OFF	

86U15X-254

Sedan model

Control unit check (Refer to page 15—141.)

OK

* Door guide

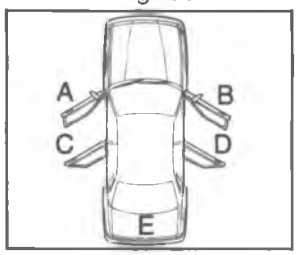

No	Procedure	Result			Action
		Security light	Chime	Room light	
1	Turn ignition switch OFF. Open door A*	OFF	⎍⎍⎍...	⎍	Repair key-less switch. (Open circuit)
2	Remove ignition key.	OFF	OFF	⎍	Repair key-less switch. (Short circuit)
3	Sit in driver's seat with door A open. Lock all door lock knobs	⎍	OFF	⎍	
4	Unlock and lock door A lock knob.	⎍	⎍	⎍	Repair door A lock-link switch.
5	Unlock and lock door C lock knob.	⎍	⎍	⎍	Repair door C lock-link switch.
6	Unlock and lock door D lock knob.	⎍	⎍	⎍	Repair door D lock-link switch.
7	Unlock and lock door B lock knob.	⎍	⎍	⎍	Repair door B lock-link switch.
8	Unlock all door lock knobs.	OFF	OFF	⎍	
9	Pull hood release lever.	⎍	OFF	⎍	Repair hood switch
10	Pull trunk release lever.	⎍	OFF	⎍	Repair trunk switch.
11	Remove key and exit vehicle.	OFF	OFF	⎍	
12	Close door A.	OFF	OFF	OFF	Repair door A switch.
13	Turn door A key cylinder to "unlock" and hold in position.	⎍	OFF	OFF	Repair door A key cylinder switch.
14	Remove key	OFF	OFF	OFF	
15	Open door C.	OFF	OFF	⎍	Repair door C switch.
16	Close door C.	OFF	OFF	OFF	
17	Turn door E (trunk) key cylinder to "unlock" and hold in position.	⎍	OFF	OFF	Repair door E key cylinder switch.
18	Remove key	OFF	OFF	OFF	
19	Close trunk.	OFF	OFF	OFF	
20	Open door D.	OFF	OFF	OFF	Repair door D switch.
21	Close door D.	OFF	OFF	OFF	
22	Turn door B key cylinder to "unlock", and hold in position.	⎍	OFF	OFF	Repair door B key cylinder switch.
23	Remove key	OFF	OFF	OFF	
24	Open door B.	OFF	OFF	⎍	Repair door B switch.
25	Close door B.	OFF	OFF	OFF	
26	Close hood.	OFF	OFF	OFF	

86U15X-255

Touring sedan model

Control unit check (Refer to page 15—141)

OK

* Door guide

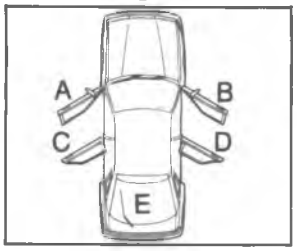

No	Procedure	Result			Action
		Security light	Chime	Room light	
1	Turn ignition switch OFF. Open door A.	OFF	⎍⎍⎍⎍...	⎍	Repair key-less switch. (Open circuit)
2	Remove ignition key	OFF	OFF	⎍	Repair key-less switch. (Short circuit)
3	Sit in driver's seat with door A open. Lock all door lock knobs.	⎍	OFF	⎍	
4	Unlock and lock door A lock knob.	⎍	⎍	⎍	Repair door A lock-link switch.
5	Unlock and lock door C lock knob.	⎍	⎍	⎍	Repair door C lock-link switch.
6	Unlock and lock door D lock knob.	⎍	⎍	⎍	Repair door D lock-link switch.
7	Unlock and lock door B lock knob.	⎍	⎍	⎍	Repair door B lock-link switch.
8	Unlock all door lock knobs.	OFF	OFF	⎍	
9	Pull hood release lever.	⎍	OFF	⎍	Repair hood switch.
10	Remove key and exit vehicle.	OFF	OFF	⎍	
11	Close door A	OFF	OFF	OFF	Repair door A switch.
12	Turn door A key cylinder to "unlock" and hold in position		OFF	OFF	Repair door A key cylinder switch.
13	Remove key.	OFF	OFF	OFF	
14	Open door C.	OFF	OFF	⎍	Repair door C switch.
15	Close door C.	OFF	OFF	OFF	
16	Turn door E key cylinder to "unlock" and hold in position.		OFF	OFF	Repair door E key cylinder switch.
17	Remove key.	OFF	OFF	OFF	
18	Open door E.	⎍	OFF	OFF	Repair door E switch.
19	Open door D.	OFF	OFF	OFF	Repair door D switch.
20	Close door D.	OFF	OFF	OFF	
21	Turn door B key cylinder to "unlock" and hold in position.	⎍	OFF	OFF	Repair door B key cylinder switch.
22	Remove key.	OFF	OFF	OFF	
23	Open door B.	OFF	OFF	⎍	Repair door B switch.
24	Lock and unlock door E	OFF	⎍	⎍	Repair door E lock-link switch.
25	Close door B.	OFF	OFF	OFF	
26	Close hood.	OFF	OFF	OFF	
27	Close door E.	OFF	OFF	OFF	

86U15X-256

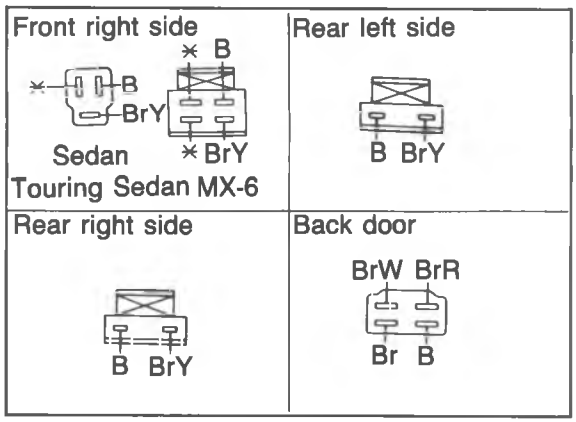

86U15X-238

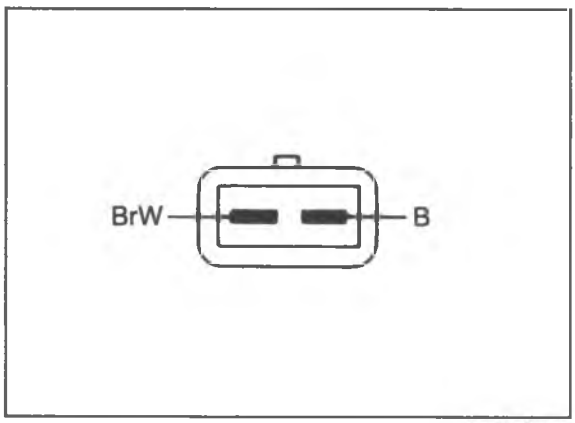

86U15X-239

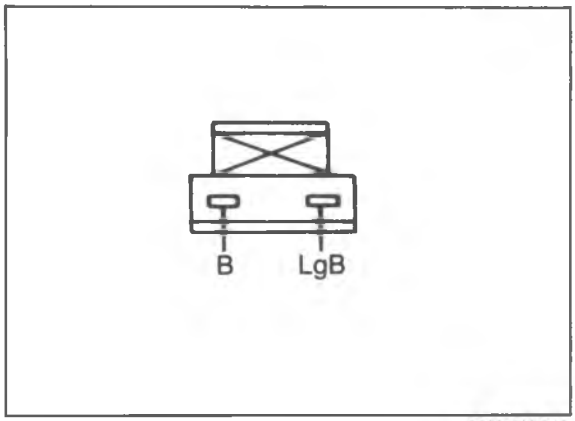

86U15X-240

INSPECTION OF SWITCH

Lock Link Switch

1. Check for continuity of the switches with an ohmmeter.

Door	Terminals	Condition	Continuity
Drivers side		Unlocked	Yes
		Locked	No
Front right side	BrY — B	Unlocked	Yes
		Locked	No
Rear left side	BrY — B	Unlocked	Yes
		Locked	No
Rear right side	BrY — B	Unlocked	Yes
		Locked	No
Back door (Trunk)	BrR — B	Unlocked	Yes
		Locked	No

2. If not, replace the switch.

Hood Switch

1. Check for continuity of the switch with an ohmmeter.

Terminal	Condition	Continuity
BrW — B	Open	Yes
	Close	No

2. If not, replace the switch.

Key Cylinder Switch

1. Check for continuity of the switch with an ohmmeter.

Door	Terminal	Condition	Continuity
Driver side	LgB — B	Unlocked	Yes
		Locked	No
Front left side	LgB — B	Unlocked	Yes
		Locked	No
Back door (Trunk)	LgR — B	Unlocked	Yes
		Locked	No

2. If not as specifications replace the switch.

Door Switch

Refer to page 15—36.

TECHNICAL DATA

MEASUREMENT ..... 30— 2
ENGINE ..... 30— 2
LUBRICATION SYSTEM ..... 30— 5
COOLING SYSTEM ..... 30— 6
FUEL AND EMISSION CONTROL
SYSTEM ..... 30— 7
ENGINE ELECTRICAL SYSTEM..... 30— 8
CLUTCH ..... 30— 9
MANUAL TRANSAXLE ..... 30—10
AUTOMATIC TRANSAXLE..... 30—11
FRONT AND REAR AXLE ..... 30—15
STEERING SYSTEM..... 30—15
BRAKING SYSTEM ..... 30—16
WHEEL AND TIRE ..... 30—17
SUSPENSION..... 30—17
BODY ELECTRICAL SYSTEM ..... 30—18
STANDARD BOLT AND NUT
TIGHTENING TORQUE ..... 30—19

0. MEASUREMENT

Item / Body Type			MX-6	Sedan	Touring Sedan
Overall length		mm (in)	4,495 (177.0)	4,555 (179.3)	4,555 (179.3)
Overall width		mm (in)	1,690 (66.5)	1,690 (66.5)	1,690 (66.5)
Overall height		mm (in)	1,360 (53.5)	1,410 (55.5)	1,375 (54.1)
Wheel base		mm (in)	2,515 (99.0)	2,575 (101.4)	2,575 (101.4)
Tread	mm (in)	Front	1,455 (57.3)	1,455 (57.3)	1,455 (57.3)
		Rear	1,465 (57.7)	1,465 (57.7)	1,465 (57.7)

1. ENGINE

Item / Engine model			F2	
			Turbo	Non-Turbo
Type			Gasoline, 4-cycle	
Cylinder arrangement and number			In-line, 4-cylinders	
Type of combustion chamber			Pent-roof	
Valve system			OHC, belt-driven	
Bore x Stroke		mm (in)	86.0 x 94.0 (3.39 x 3.70)	
Total piston displacement		cc (cu in)	2,184 (133.2)	
Compression ratio			7.8 : 1	8.6 : 1
Compression pressure kPa (kg/cm^2, psi)-rpm	Standard		960 (9.8, 139)-260	1,120 (11.4, 162)-270
	Minimum		680 (6.9, 98)-260	780 (8.0, 114)-270
	Maximum difference between cylinders		196 (2.0, 28)	
Valve timing	IN	Open BTDC	10°	
		Close ABDC	49°	
	EX	Open BBDC	55°	
		Close ATDC	12°	
Valve clearance		mm (in) IN	0; Maintenance free	
		mm (in) EX	0; Maintenance free	
Cylinder head				
Height		mm (in)	91.95—92.05 (3.620—3.624)	
Distortion		mm (in) Maximum	0.15 (0.006)	
Grinding limit		mm (in) Maximum	0.20 (0.008)	
Valve and valve guide				
Valve head diameter		mm (in) IN	32.4—32.6 (1.276—1.283)	
		mm (in) EX	33.9—34.1 (1.335—1.343)	
Valve head thickness (margin)		mm (in) IN	0.8—1.2 (0.031—0.047)	
		mm (in) EX	1.3—1.7 (0.051—0.067)	
Valve face angle		IN	45°	
		EX	45°	
Valve length mm (in)	IN	Standard	115.81 (4.5594)	
		Minimum	115.31 (4.5398)	
	EX	Standard	116.21 (4.5752)	
		Minimum	115.71 (4.5555)	
Valve stem diameter		mm (in) IN	6.970—6.985 (0.2744—0.2750)	
		mm (in) EX	6.965—6.980 (0.2742—0.2748)	
Guide inner diameter		mm (in) IN	7.01—7.03 (0.2760—0.2768)	
		mm (in) EX	7.01—7.03 (0.2760—0.2768)	
Valve stem to guide clearance		mm (in) IN	0.025—0.060 (0.0010—0.0024)	
		mm (in) EX	0.030—0.065 (0.0012—0.0026)	
		Maximum	0.20 (0.0079)	
Guide projection (Height "A")		mm (in)	19.8—20.3 (0.780—0.799)	

Item			Engine model	F2 Turbo	F2 Non-Turbo
Valve seat					
Seat angle			IN	45°	
			EX	45°	
Seat contact width mm (in)			IN	1.2—1.6 (0.047—0.063)	
			EX	1.2—1.6 (0.047—0.063)	
Seat sinking (Measure valve protruding length) mm (in)	IN		Standard	50.2 (1.976)	
			Maximum	51.0 (2.008)	
	EX		Standard	50.2 (1.976)	
			Maximum	51.0 (2.008)	
Valve spring					
Free length mm (in)	IN		Standard	49.5 (1.949)	
			Minimum	48.3 (1.902)	
	EX		Standard	50.4 (1.984)	
			Minimum	49.2 (1.937)	
Out-of-square mm (in)			Maximum	1.7 (0.067)	
Setting load/height N (kg, lb)/mm (in)			IN	203—230 (20.7—23.4, 45.5—51.5)/41 (1.614)	
			EX	240—272 (24.5—27.7,.53.9—60.9)/41 (1.614)	
Camshaft					
Camlobe height mm (in)	IN		Standard	41.290—41.390 (1.6256—1.6295)	
			Minimum	41.140 (1.6197)	
	EX		Standard	41.797—41.897 (1.6455—1.6495)	
			Minimum	41.647 (1.6396)	
Journal diameter mm (in)	Front and Rear (No. 1,5)			31.940—31.965 (1.2575—1.2585)	
	Center (No. 2,3,4)			31.910—31.935 (1.2563—1.2573)	
	Out-of-round		Maximum	0.05 (0.002)	
Camshaft bearing oil clearance mm (in)	Front and Rear (No. 1,5)			0.035—0.085 (0.0014—0.0033)	
	Center (No. 2,3,4)			0.065—0.115 (0.0026—0.0045)	
			Maximum	0.15 (0.0059)	
Camshaft runout mm (in)			Maximum	0.03 (0.0012)	
Camshaft end play mm (in)			Standard	0.08—0.16 (0.003—0.006)	
			Maximum	0.20 (0.008)	
Rocker arm and rocker arm shaft					
Rocker arm inner diameter mm (in)				19.000—19.033 (0.748—0.749)	
Rocker arm shaft diameter mm (in)				18.959—18.980 (0.746—0.747)	
Rocker arm to shaft clearance mm (in)			Standard	0.020—0.074 (0.0008—0.0029)	
			Maximum	0.10 (0.004)	
Cylinder block					
Height mm (in)				301.5 (11.87)	
Distortion mm (in)			Maximum	0.15 (0.006)	
Grinding limit mm (in)				0.20 (0.008)	
Cylinder bore diameter mm (in)	Standard			86.000—86.019 (3.3858—3.3866)	
	0.25 (0.010) oversize			86.250—86.269 (3.3957—3.3964)	
	0.50 (0.020) oversize			86.500—86.519 (3.4055—3.4062)	
Cylinder bore taper and out-of-round mm (in)			Maximum	0.019 (0.0007)	
Piston					
Piston diameter measured at 90° to pin bore axis and 18.0 mm (0.709 in) below oil ring groove mm (in)	Standard			85.944—85.964 (3.3836—3.3844)	
	0.25 (0.010) oversize			86.194—86.214 (3.3935—3.3942)	
	0.50 (0.020) oversize			86.444—86.464 (3.4033—3.4041)	
Piston and cylinder clearance mm (in)			Standard	0.036—0.075 (0.0014—0.0030)	
			Maximum	0.15 (0.0059)	
Piston ring					
Thickness mm (in)			Top	1.47—1.49 (0.0579—0.0587)	
			Second	1.47—1.49 (0.0579—0.0587)	

Item		Engine model	F2	
			Turbo	Non-Turbo
End gap measured in cylinder mm (in)		Top	0.20—0.35 (0.008—0.0138)	
		Second	0.15—0.30 (0.006—0.012)	
		Oil (rail)	0.20—0.70 (0.008—0.0276)	0.30—0.90 (0.012—0.0354)
		Maximum	1.0 (0.039)	
Ring groove width in piston mm (in)		Top	1.52—1.54 (0.0598—0.0606)	
		Second	1.52—1.54 (0.0598—0.0606)	
		Oil	4.02—4.04 (0.1583—0.1591)	
Clearance of piston ring to ring groove mm (in)		Top	0.03—0.07 (0.0012—0.0028)	
		Second	0.03—0.07 (0.0012—0.0028)	
		Maximum	0.15 (0.006)	
Piston pin				
Diameter mm (in)			21.974—21.980 (0.8651—0.8654)	
Interference in connecting rod mm (in)			0.013—0.037 (0.0005—0.0015)	
Piston to piston pin clearance mm (in)			0.008—0.024 (0.0003—0.0009)	
Installtion pressure N (kg, lb)			4,900—14,700 (500—1,500, 1,100—3,300)	
Connecting rod and connecting rod bearing				
Length (Center to center) mm (in)			158.45—158.55 (6.238—6.242)	
Twisting and bending mm (in)			0.06 (0.0024) max.	
Small end bore mm (in)			21.943—21.961 (0.8640—0.8646)	
Big end bore mm (in)			54.002—54.017 (2.1261—2.1266)	
Big end width mm (in)			26.838—26.890 (1.0566—1.0587)	
Connecting rod side clearance mm (in)		Standard	0.110—0.262 (0.004—0.010)	
		Maximum	0.30 (0.012)	
Crankshaft				
Crankshaft runout mm (in)		Maximum	0.03 (0.0012)	
Main journal diameter mm (in)	Standard size		59.937—59.955 (2.3597—2.3604)	
	0.25 (0.010) undersize	Standard	59.693—59.711 (2.3051—2.3508)	
		No. 3	59.687—59.705 (2.3499—2.3506)	
	0.50 (0.020) undersize	No. 1,2,4,5	59.443—59.461 (2.3403—2.3410)	
		No. 3	59.437—59.455 (2.3400—2.3407)	
	0.75 (0.030) undersize	No. 1,2,4,5	59.193—59.211 (2.3304—2.3311)	
		No. 3	59.187—59.205 (2.3302—2.3309)	
Main journal taper and out-of-round mm (in)		Maximum	0.05 (0.0020)	
Crank pin diameter mm (in)	Standard		50.940—50.955 (2.0055—2.0061)	
	0.25 (0.010) undersize		50.690—50.705 (1.9957—1.9963)	
	0.50 (0.020) undersize		50.440—50.455 (1.9858—1.9864)	
	0.75 (0.030) undersize		50.190—50.205 (1.9760—1.9766)	
Crank pin taper and out-of-round mm (in)		Maximum	0.05 (0.0020)	
Main bearing				
Main journal bearing oil clearance mm (in)	No. 1,2,4,5	Standard	0.025—0.043 (0.0010—0.0017)	
		Maximum	0.08 (0.0031)	
	No. 3	Standard	0.031—0.049 (0.0012—0.0019)	
		Maximum	0.08 (0.0031)	
Available undersize bearing mm (in)			0.25 (0.010), 0.50 (0.020), 0.75 (0.030)	
Crank pin bearing				
Crank pin bearing oil clearance mm (in)		Standard	0.027—0.067 (0.0011—0.0026)	
		Maximum	0.10 (0.0039)	
Available undersize bearing mm (in)			0.25 (0.010), 0.50 (0.020), 0.75 (0.030)	
Thrust bearing (center main bearing)				
Crankshaft end play mm (in)		Standard	0.08—0.18 (0.0031—0.0071)	
		Maximum	0.30 (0.0118)	
Bearing width mm (in)	Standard		27.94—27.99 (1.100—1.102)	
	0.25 (0.010) oversize		28.04—28.09 (1.104—1.106)	
	0.50 (0.020) oversize		28.12—28.17 (1.107—1.109)	
	0.75 (0.030) oversize		28.20—28.25 (1.110—1.112)	
Timing belt				
Belt deflection mm (in)/98 N (10 kg, 22 lb)			7.5—8.5 (0.30—0.33)	

2. LUBRICATION SYSTEM

Item \ Engine model			F2
Lubrication method			Force-fed
Oil pump			
Type			Trochoid gear
Regulating pressure	kPa (kg/cm², psi)		294—392 (3.0—4.0, 43—57)
Oil pressure	kPa (kg/cm², psi)	1,000 rpm	147—245 (1.5—2.5, 21—36)
		3,000 rpm	294—392 (3.0—4.0, 43—57)
Inner rotor tooth tip to outer rotor clearance	mm (in)	Standard	0.044—0.084 (0.0017—0.0033)
		Maximum	0.18 (0.0071)
Outer rotor to body clearance	mm (in)	Standard	0.09—0.176 (0.0035—0.0069)
		Maximum	0.20 (0.008)
Side clearance	mm (in)	Standard	0.03—0.09 (0.0012—0.0035)
		Maximum	0.10 (0.004)
Oil filter			
Type			Full flow, paper element
Relief pressure differential	kPa (kg/cm², psi)		78—118 (0.8—1.2, 11—17)
Oil cooler (Turbo)			
Type			Water cooled, 4 stage
Oil pressure switch			
Activation pressure	kPa (kg/cm², psi)		29 (0.3, 4.3)
Engine oil			
Capacity	liters (US qt, Imp qt)	Total (dry engine)	4.6 (4.9, 4.0)
		Oil pan	3.9 (4.1, 3.4)
		Oil filter	0.3 (0.32, 0.26)
Grade			API Service SD, SE, or SF
Viscosity number	30°C (86°F) or over		SAE 40
	0°C—40°C (32°F—104°F)		SAE 30
	−10°C—20°C (14°F—68°F)		SAE 20W-20
	−10°C—50°C (14°F—122°F) or over		SAE 20W-40 or 20W-50
	−25°C—30°C (−13°F—86°F)		SAE 10W-30
	−25°C—50°C (−13°F—122°F) or over		SAE 10W-40 or 10W-50
	0°C—−30°C (32°F—−22°F) or below		SAE 5W-30
	−20°C (−4°F) or below		SAE 5W-20

3. COOLING SYSTEM

Item \ Engine model			F2	
			Turbo	Non-Turbo
Cooling method			Water-cooled, forced circulation	
Water pump				
Type			Centrifugal, timing belt driven	
Impeller diameter	mm (in)		70 (2.76)	
Number of impeller blades			6	
Speed ratio			1 : 1.05	
Water seal type			Unified mechanical seal	
Thermostat				
Type			Wax	
Starts to open	°C (°F)		86.5—89.5 (188—193)	
Full-open	°C (°F)		100 (212)	
Lift	mm (in)		8.5 (0.33) min.	
Radiator				
Type			Corrugated fin	
Cap opening valve pressure	kPa (kg/cm², psi)		74—103 (0.75—1.05, 11—15)	
Cooling system pressure	kPa (kg/cm², psi)		103 (1.05, 15)	
Electric fan				
Type			Electric	
Capacity	W	MTX	80	80
		ATX	160	120
Current	A	MTX	5.6—7.6	5.6—7.6
		ATX	10.6—16.6	8.0—11.0
Number of blades			4	
Outer diameter	mm (in)	MTX	320 (12.6)	
		ATX	340 (13.4)	
Switching temperature OFF → ON	°C (°F)		97 (207)	
Coolant				
Capacity	liters (US qt, Imp qt)	With heater	7.5 (7.9, 6.6)	
		Without heater	6.9 (7.3, 6.1)	

Antifreeze solution	Protection	Mixture percentage (volume) %		Specific gravity of mixture at 20°C (68°F)
		Water	Solution	
	Above −16°C (3°F)	65	35	1.054
	Above −26°C (−15°F)	55	45	1.066
	Above −40°C (−40°F)	45	55	1.078

4A, 4B FUEL AND EMISSION CONTROL SYSTEM

Item / Engine model			Non-Turbo	Turbo
Idle speed	rpm		With test connector grounded 750 ± 25 (ATX: P range)	
Throttle body				
Type			Horizontal draft (2-barrel)	
Throat diameter	mm (in)	No. 1	MTX: 40 (1.6), ATX: 46 (1.8)	
		No. 2	MTX: 46 (1.8), ATX: 40 (1.6)	
Air flow meter				
Resistor	Ω	E_2—V_S	Fully closed: 20—400 Fully open: 20—1,000	
		E_2—V_C	100—400	
		E_2—V_B	200—400	
		E_2—THA	−20°C (−4°F) 13,600—18,400 20°C (68°F) 2,210— 2,690 60°C (140°F) 493— 667	
Fuel pump				
Type			Impeller (in tank)	
Output pressure	kPa (kg/cm², psi)		Main pump: 441—588 (4.5—6.0, 64—85) Transfer pump: 39 (0.4, 5.7) max.	
Feeding capacity	cc (cu in)/10 seconds		Main pump: 220 (13.4) min. Transfer pump: 190 (11.6) min.	
Fuel filter				
Type	Low-pressure side		Nylon element	
	High-pressure side		Paper element	
Pressure regulator				
Type			Diaphragm	
Regulating pressure	kPa (kg/cm², psi)		235—275 (2.4—2.8, 34—40)	
Injector				
Type			High-ohmic	
Type of drive			Voltage	
Resistance	Ω		12—16	11—15
Injection amount	cc (cu in)/15 seconds		44—61 (2.68—3.72)	73—90 (4.45—5.49)
Idle speed control valve				
Solenoid resistance	Ω		6.3—9.9	
Turbocharger				
Cooling method			Engine coolant	
Lubrication method			Engine oil	
Boost pressure (Maximum)	kPa (kg/cm², psi)		60 (0.61, 8.7): Solenoid duty value 100% 45 (0.46, 6.5): Solenoid duty value 0%	
Fuel tank				
Capacity	liters (US gal, Imp gal)		60 (15.9, 13.2) 57 (15.0, 12.5): 4-wheel steering vehicle	
Air cleaner				
Element type			Oil permeated	
Fuel				
Specification			Unleaded regular	Unleaded premium (Unleaded regular)

5. ENGINE ELECTRICAL SYSTEM

Item	Engine model		Non-Turbo	Turbo
Battery	Voltage V		12, Negative ground	
	Type and capacity (20 hour rate)		50D20L (50 Ah), 26RCCA410 55 D23L (60 Ah), 85CCA550	
Alternator	Type		A.C.	
	Output V—A		12—70	
	Regulator type		Transistorized (built-in IC regulator)	
	Regulated voltage V		14.1—14.7	
	Brush length mm (in)	Standard	16.5 (0.650)	
		Minimum	8 (0.315)	
Drive belt tension mm (in)	New		6—8 (0.236—0.315)	
	Used		7—9 (0.276—0.354)	
Starter	Type		Coaxial reduction	
	Output V-kw		12—1.4	
	Brush length mm (in)	Standard	17.5 (0.689)	
		Minimum	10.0 (0.394)	
Ignition Timing			6° ± 1° BTDC (Vacuum hoses disconnected)	9° ± 1° BTDC (Test connector grounded)
Distributor	Type		Fully transistorized (HEI)	Electronic spark advanced (ESA)
	Centrifugal spark advance (Crank angle/Engine speed) degree/rpm		–2—2/1,200 12—16/2,400 12—16/3,500 16—20/4,500	Engine control unit controls spark advance
	Vacuum spark advance (Crank angle/Vacuum) degree/mmHg (in Hg)		[A chamber] –2—2/110 (4.3) 8—12/193 (7.6) 18—22/275 (10.8) [B chamber] –2—2/110 (4.3) –4 — –8/200 (7.9)	
Spark plug	Type		NGK: ZFR5A-11 ZFR6A-11 ZFR7A-11 Nippon Denso: QJ16CR11 QJ20CR11 QJ22CR11	
	Plug gap mm (in)		1.0—1.1 (0.039—0.043)	
Firing order			1—3—4—2	

6. CLUTCH

Item / Engine model		Non-Turbo	Turbo
Clutch control		HYDRAULIC	
Clutch pedal			
Type		Suspended	
Pedal ratio		6.00	
Full stroke	mm (in)	135 (5.31)	
Height	mm (in)	216.5—221.5 (8.524—8.720)	
Free play	mm (in)	5—13 (0.20—0.51)	
Distance to floor when clutch fully disengaged	mm (in)	68 (2.7) or more	
Flywheel			
Deflection	mm (in)	0.2 (0.008) max.	
Grinding limit	mm (in)	0.5 (0.020) max.	
Clutch disc			
Type		Single dry plate	
Set load	N (kg, lb)	4,316 (440.968)	5,494 (560.1232)
Runout	mm (in)	1.0 (0.039) max.	
Wear limit	mm (in)	0.3 (0.012) from rivet head	
Outer diameter	mm (in)	225 (8.858)	240 (9.449)
Inner diameter	mm (in)	150 (5.906)	160 (6.299)
Facing thickness mm (in)	Flywheel side	3.5 (0.14)	
	Pressure plate side	4.1 (0.16)	3.5 (0.14)
Clutch cover			
Type		Diaphragm spring	
Runout	mm (in)	0.05 (0.0020) max.	
Grinding limit	mm (in)	0.5 (0.020)	
Master cylinder inner diameter	mm (in)	15.87 (0.625)	
Release cylinder inner diameter	mm (in)	19.05 (0.750)	
Clutch fluid type		SAE J1703, or FMVSS116 DOT-3, or DOT-4	

7A. MANUAL TRANSAXLE

Item / Engine model			Non-Turbo	Turbo
Transmission				
Shift lever position			Floor shift	
Gear ratio	First		3.307	3.250
	Second		1.833	1.772
	Third		1.233	1.194
	Fourth		0.914	0.926
	Fifth		0.717	0.711
	Reverse		3.166	3.461
Oil capacity liters (US qt, Imp qt)			3.35 (3.6, 3.0)	3.65 (3.9, 3.3)
Fluid type			ATF: Dexron II	
Clearance				
Clearance of lever and reverse idle gear mm (in)	Standard		0.1—0.32 (0.004—0.013)	
	Wear limit		0.5 (0.020)	
Clearance of shift fork and clutch sleeve mm (in)	Standard		0.1—0.41 (0.004—0.016)	
	Wear limit		0.5 (0.020)	
Clearance of synchronizer ring and gear mm (in)	Standard		1.5 (0.059)	
	Wear limit		0.8 (0.021)	
Gear thrust clearance mm (in)	First	Standard	0.05—0.53 (0.002—0.021)	0.1—0.38 (0.0039—0.015)
		Limit	0.6 (0.024)	0.4 (0.017)
	Second	Standard	0.5—0.98 (0.020—0.039)	0.150—0.262 (0.0059—0.0103)
		Limit	1.0 (0.039)	0.3 (0.012)
	Third	Standard	0.05—0.425 (0.002—0.017)	0.1—0.212 (0.0039—0.0083)
		Limit	0.5 (0.020)	0.3 (0.012)
	Fourth	Standard	0.002—0.365 (0.0001—0.014)	0.150—0.262 (0.0059—0.0103)
		Limit	0.5 (0.020)	0.3 (0.012)
Bearing preload of primary shaft gear			Primary shaft 0.1—0.25 N·m (1.0—2.5 cm-kg, 0.86—2.18 in-lb) Secondary shaft 0.2—0.4 N·m (2.0—4.0 cm-kg, 1.7—3.4 in-lb)	
Bearing preload adjust shim mm (in)			0.25 (0.010), 0.30 (0.012), 0.35 (0.014), 0.40 (0.016), 0.45 (0.020), 0.50 (0.020), 0.55 (0.022), 0.60 (0.023), 0.65 (0.025), 0.70 (0.027), 0.75 (0.030), 0.80 (0.031)	
Drive and differential				
Final gear	Type		Helical gear	
	Reduction ratio		4.105:1	
Side bearing preload			1.4—2.0 N·m (14—20 cm-kg, 12—17 in-lb)	
Bearing preload adjust shim mm (in)			0.1 (0.004), 0.15 (0.006), 0.20 (0.008), 0.25 (0.010), 0.30 (0.012), 0.35 (0.014), 0.40 (0.016), 0.45 (0.018), 0.50 (0.020), 0.55 (0.022), 0.60 (0.024), 0.65 (0.026), 0.70 (0.027), 0.75 (0.030), 0.80 (0.031), 0.85 (0.034), 0.90 (0.035), 0.95 (0.037), 1.00 (0.039), 1.05 (0.041), 1.10 (0.043), 1.15 (0.045), 1.20 (0.047)	
Backlash of side gear and pinion gear mm (in)			0—0.1 (0.004)	

7B. AUTOMATIC TRANSAXLE

Item / Engine model			Non-Turbo	Turbo
Model			EC-AT (G4A-EL)	
Gear ratio	1st		2,800	
	2nd		1,540	
	3rd		1,000	
	4th (OD)		0,700	
	Reverse		2,333	
Oil capacity		Liters (US qt, Imp qt)	6.8 (7.2, 6.0)	
Fluid type			ATF Dexron II or M III	
Fluid level with the engine idling in "P"			Between "F" and "L" marks on gauge	
Stall speed				
After brake-in	"D", "S", "L"	rpm	2,120—2,420	2,550—2,850
	"R"	rpm	2,080—2,380	2,500—2,800
Time lag				
"N" → "D"		sec	0.5—1.0	
"N" → "R"		sec	0.5—1.0	
Line pressure				
"D", "S", "L"	Idle	kPa (kg/cm², psi)	353—432 (3.6—4.4, 51—63)	
	Stall	kPa (kg/cm², psi)	873—1,040 (8.9—10.6, 127—151)	
"R"	Idle	kPa (kg/cm², psi)	598—942 (6.1—9.6, 87—137)	
	Stall	kPa (kg/cm², psi)	1,688—2,011 (17.0—20.5, 242—292)	
Throttle pressure				
"D"	Idle	kPa (kg/cm², psi)	39—88 (0.4—0.9, 6—13)	
	Stall	kPa (kg/cm², psi)	471—589 (4.8—6.0, 68—85)	

Shift Point

Range Mode		Throttle condition (Throttle sensor voltage)	Shift	Drum speed rpm		Vehicle speed km/h (mph)	
				Non-Turbo	Turbo	Non-Turbo	Turbo
Power	"D"	Fully opened (4.3 volt)	D1→D2	5,000—5,500	4,900—5,500	54—56 (33—35)	53—59 (33—37)
			D2→D3	5,300—5,700	5,100—5,500	105—113 (65—70)	100—108 (62—67)
			D3→OD	5,400—5,700	5,450—5,800	165—175 (102—109)	
		Half throttle (1.6—2.2 volt)	D1→D2	3,500—4,050	3,550—4,150	38—44 (24—27)	
			D2→D3	3,750—4,250	3,850—4,350	75—85 (47—53)	
			D3→OD	3,600—4,250	3,650—4,300	110—130 (68—81)	
			Lock-up ON (OD)	2,500—3,000	2,800—3,000	110—130 (68—81)	
			Lock-up OFF (OD)	2,400—2,850	2,400—2,900	104—124 (64—77)	
			OD→D3	1,950—2,450	1,800—2,300	85—107 (53—66)	77—99 (48—61)
			D3→D2	1,750—2,300	1,700—2,100	54—70 (33—43)	51—63 (32—39)
		Kick-down	OD→D3	3,500—3,700	3,550—3,800	153—163 (95—101)	
			OD→D2	2,150—2,350	2,150—2,300	94—102 (58—63)	92—100 (57—62)
			OD→D1	950—1,100	1,000—1,150	42—48 (26—30)	44—50 (27—31)
			D3→D2	3,050—3,350	3,050—3,300	94—102 (40—63)	92—100 (57—62)
			D3→D1	1,350—1,550	1,450—1,650	42—48 (26—30)	44—50 (27—31)
			D2→D1	2,200—2,400	2,250—2,550	42—48 (26—30)	44—50 (27—31)
Economy		Fully opened (4.3 volt)	D1→D2	4,900—5,450	4,750—5,300	54—60 (33—37)	51—57 (32—35)
			D2→D3	5,100—5,500	4,900—5,300	102—110 (63—68)	96—104 (60—64)
			D3→OD	5,400—5,700	5,450—5,800	165—175 (102—109)	
		Half throttle (1.6—2.2 volt)	D1→D2	2,800—3,350	3,200—3,850	31—37 (19—23)	
			D2→D3	3,000—3,400	3,450—3,900	60—68 (37—42)	
			D3→OD	2,900—3,450	3,350—4,000	89—107 (55—66)	
			Lock-up ON (OD)	2,050—2,500	2,400—2,850	91—109 (56—68)	
			Lock-up OFF (OD)	1,950—2,350	2,250—2,700	85—103 (53—64)	
			OD→D3	1,600—1,950	1,400—1,850	70—86 (43—53)	54—70 (33—43)
			D3→D2	1,200—1,550	1,250—1,550	38—48 (24—30)	34—42 (21—26)

Range Mode		Throttle condition (Throttle sensor voltage)	Shift	Drum speed rpm		Vehicle speed km/h (mph)	
				Non-Turbo	Turbo	Non-Turbo	Turbo
Economy	"D"	Kick-down	OD→D3	3,500—3,700	3,550—3,800	153—163 (95—101)	
			OD→D2	2,050—2,250		90—98 (56—61)	89—97 (55—60)
			OD→D1	950—1,100	1,000—1,150	42—48 (26—30)	44—50 (27—31)
			D3→D2	2,950—3,200		90—98 (56—61)	89—97 (55—60)
			D3→D1	1,350—1,550	1,450—1,650	42—48 (26—30)	44—50 (27—31)
			D2→D1	2,100—2,400	2,250—2,550	42—48 (26—30)	44—50 (27—31)
"S"		Fully opened (4.3 volt)	S1→S2	5,000—5,500	4,900—5,500	54—56 (33—35)	53—59 (33—37)
			S2→S3	5,300—5,700	5,100—5,500	105—113 (65—70)	100—108 (62—67)
			S4→S3	3,750—4,000	3,850—4,050	165—175 (102—109)	
			S3→S2	3,050—3,350	3,050—3,300	94—102 (40—63)	92—100 (57—62)
			S2→S1	2,200—2,400	2,250—2,550	42—48 (26—30)	44—50 (27—31)
		Half throttle (1.6—2.2 volt)	S1→S2	3,500—4,050	3,350—4,150	38—44 (24—27)	
			S2→S3	3,750—4,250	3,850—4,350	75—85 (47—53)	
			S4→S3	1,950—2,450	1,800—2,300	85—107 (53—66)	77—99 (48—61)
			S3→S2	1,750—2,300	1,700—2,100	54—70 (33—43)	51—63 (32—39)
"L"		Fully opened (4.3 volt)	L1→L2	5,000—5,500	4,900—5,500	54—56 (33—35)	53—59 (33—37)
			L2→L1	2,200—2,400	2,250—2,550	42—48 (26—30)	44—50 (27—31)
		Half throttle (1.6—2.2 volt)	L1→L2	3,500—4,050	3,350—4,150	38—44 (24—27)	
HOLD	"D"	—	D2→D3	850—1,150	1,000—1,350	17—23 (11—14)	
			D3→D2	250—400	250—500	7—13 (4—8)	
	"S"	Fully closed (0.5 volt)	OD→D3	3,750—4,000	4,350—4,600	165—175 (102—109)	
			S3→S2	3,600—3,850	4,100—4,400	110—118 (68—73)	108—116 (67—72)
	"L"		L2→L1	2,150—2,450	2,200—2,500	43—49 (27—30)	

Item		Engine model	Non-Turbo	Turbo
Torque converter				
Stall torque ratio			1,700—1,900 : 1	1,600—1,800 : 1
Bushing diameter	mm (in)	Standard	53,030 (2,088)	
		Maximum	53,076 (2,090)	
Oil pump				
Clearance				
Cam ring to oil pump cover	mm (in)	Standard	0.005—0.020 (0.0002—0.0008)	
		Maximum	0.080 (0.003)	
Rotor to oil pump cover	mm (in)	Standard	0.005—0.020 (0.0002—0.0008)	
		Maximum	0.030 (0.0012)	
Vane to oil pump cover	mm (in)	Standard	0.015—0.050 (0.0006—0.0020)	
		Maximum	0.080 (0.003)	
Seal pin to oil pump cover	mm (in)	Standard	0.005—0.020 (0.0002—0.0008)	
		Maximum	0.060 (0.002)	
Vane to rotor groove	mm (in)	Standard	0.010—0.045 (0.0004—0.0018)	
		Maximum	0.065 (0.0026)	
Sleeve outer diameter	mm (in)	Standard	28.00 (1.102)	
Rotor bushing in inner diameter	mm (in)	Standard	28.00 (1.102)	
		Maximum	28.05 (1.104)	
Seal pin outer diameter	mm (in)	Standard	5.00 (0.197)	
		Minimum	4.90 (0.193)	
Guide ring outer diameter	mm (in)	Standard	57.85 (2.278)	
		Minimum	57.70 (2.272)	
Valve outer diameter	mm (in)	Standard	12.00 (0.472)	
		Minimum	11.86 (0.467)	

Item / Engine model			Non-Turbo	Turbo
Forward clutch				
Number of drive/driven plate			3/3	4/4
Drive plate thickness	mm (in)	Standard	1.6 (0.063)	
		Minimum	1.4 (0.055)	
Forward clutch clearance	mm (in)		1.0—1.2 (0.040—0.047)	
Retaining plate sizes	mm (in)		5.9 (0.232), 6.1 (0.240), 6.3 (0.248), 6.5 (0.256), 6.7 (0.264), 8.9 (0.350)	
Coasting clutch				
Number of drive/driven plates			2/2	
Drive plate thickness	mm (in)	Standard	1.6 (0.063)	
		Minimum	1.4 (0.055)	
Coasting clutch clearance	mm (in)		1.0—1.2 (0.040—0.047)	
Retaining plate sizes	mm (in)		4.6 (0.181), 4.8 (0.189), 5.0 (0.197), 5.2 (0.205), 5.4 (0.213), 5.6 (0.220)	
Return spring free length	mm (in)		29.8 (1.173)	
Reverse clutch				
Number of drive/driven plates			2/2	
Drive plate thickness	mm (in)	Standard	1.6 (0.063)	
		Minimum	1.4 (0.055)	
Reverse clutch clearance	mm (in)		2.1—2.4 (0.083—0.094)	
Retaining plate sizes	mm (in)		6.6 (0.260), 6.8 (0.268), 7.0 (0.276), 7.2 (0.283), 7.4 (0.291), 7.6 (0.299)	
3-4 clutch				
Number of drive/driven plates			5/5	
Drive plate thickness	mm (in)	Standard	1.6 (0.063)	
		Minimum	1.4 (0.055)	
3-4 clutch clearance	mm (in)		1.3—1.5 (0.051—0.059)	
Retaining plate sizes	mm (in)		3.8 (0.150), 4.0 (0.157), 4.2 (0.165), 4.4 (0.173), 4.6 (0.181), 4.8 (0.189)	
Return spring free length	mm (in)		33.2 (1.307)	
Low and reverse brake				
Number of drive/driven plates			4/4	5/5
Drive plate thickness	mm (in)	Standard	1.6 (0.063)	
		Minimum	1.4 (0.055)	
Low and reverse brake clearance	mm (in)		2.1—2.4 (0.083—0.094)	
Retaining plate sizes	mm (in)		6.8 (0.268), 7.0 (0.276), 7.2 (0.283), 7.4 (0.291), 7.6 (0.299), 7.8 (0.307)	
Return spring free length	mm (in)		20.5 (0.807)	
Sun gear drum bushing	mm (in)	Maximum	33.425 (1.316)	
Small sun gear bushing	mm (in)	Maximum	24.021 (0.946)	
Carrier hub				
Clearance between pinion washer and planet carrier	mm (in)	Maximum	0.2—0.7 (0.008—0.028)	
Servo				
Free length of return spring	mm (in)	Standard	43.25 (1.703)	42.0 (1.654)
2-3 accumulator valve				
2-3 accumulator valve spring	mm (in)	Standard	83.3 mm (3.280)	75.4 (2.968)

Control valve springs

Spring name		Outer dia. mm (in)	Free length mm (in)	Wire dia. mm (in)	Spring color
1-2 accumulator small spring	Non-Turbo	10.8 (0.425)	96.1 (3.788)	1.3 (0.051)	Red
1-2 accumulator large spring	Non-Turbo	16.0 (0.630)	87.1 (3.429)	2.1 (0.083)	Red
	Turbo	12.8 (0.504)	83.6 (3.291)	1.7 (0.067)	White
Bypass, servo control spring	Non-Turbo	5.0 (0.197)	33.4 (1.315)	0.55 (0.022)	Maroon
	Turbo	5.0 (0.197)	37.1 (1.461)	0.55 (0.022)	White
2-3 timing spring		8.3 (0.327)	26.5 (1.043)	0.8 (0.031)	—
N/R accumulator rear spring		11.1 (0.437)	62.0 (2.441)	1.2 (0.047)	Light green
N/D accumulator front spring	Non-Turbo	9.8 (0.386)	52.9 (2.083)	1.0 (0.039)	Brown
	Turbo	9.8 (0.386)	68.0 (2.677)	1.1 (0.043)	Orange
Coasting bypass spring		5.8 (0.228)	37.7 (1.484)	0.6 (0.024)	Dark blue
3-2 timing spring		8.2 (0.323)	28.6 (1.126)	0.8 (0.031)	Red
3-2 capacity spring		5.4 (0.213)	30.6 (1.205)	0.5 (0.020)	White
Throttle relief ball spring		6.6 (0.260)	21.6 (0.850)	0.8 (0.031)	—
Pressure modifier spring		8.3 (0.327)	26.5 (1.043)	0.8 (0.031)	—
Low reducing spring		8.7 (0.343)	38.3 (1.508)	0.9 (0.035)	Black
1-2 shift spring		8.7 (0.343)	41.3 (1.626)	1.0 (0.039)	Yellow
2-3, 3-4 shift spring		7.4 (0.291)	36.6 (1.441)	0.8 (0.031)	Gray
Throttle backup spring		9.65 (0.380)	29.6 (1.060)	0.55 (0.022)	Red
Throttle modulator spring		6.3 (0.248)	47.9 (1.886)	0.8 (0.031)	—
Throttle assist spring		5.15 (0.203)	32.3 (1.272)	0.55 (0.022)	Dark green
Throttle spring		5.4 (0.213)	47.2 (1.858)	0.8 (0.031)	Pink
Converter relief ball spring		6.9 (0.272)	24.1 (0.949)	0.9 (0.035)	Maroon
Orifice check valve spring		5.0 (0.197)	12.5 (0.492)	0.23 (0.009)	—
Pressure regulator spring		11.5 (0.453)	26.5 (1.043)	1.0 (0.039)	Maroon
Lock-up control spring		5.0 (0.197)	35.2 (1.386)	0.6 (0.024)	Purple

Item / Engine model		Non-Turbo	Turbo
Gear assembly			
Total end play	mm (in)	0.25—0.50 (0.010—0.020)	
End play adjust race	mm (in)	1.2 (0.047), 1.4 (0.055), 1.6 (0.063), 1.8 (0.071), 2.0 (0.079), 2.2 (0.087)	
Idle gear bearing preload	N·m (cm-kg, in-lb)	0.03—0.9 (0.3—9.0, 0.26—7.8)	
Preload adjust shims	mm (in)	0.10 (0.004), 0.12 (0.005), 0.14 (0.006), 0.16 (0.0063) 0.18 (0.007), 0.20 (0.008)	
Output gear bearing preload	kg (cm-kg, in-lb)	0.03—0.9 (0.3—9.0, 0.26—7.8)	
Preload adjust shims	mm (in)	0.10 (0.004), 0.12 (0.005), 0.14 (0.006) 0.16 (0.0063), 0.18 (0.007), 0.20 (0.008) 0.50 (0.020)	
Drive and differential			
Final gear	Type	Helical gear	
	Reduction ratio	3,700 : 1	
Side bearing preload	N·m (cm-kg, in-lb)	2.9—3.9 (30—40, 26—35)	
Preload adjust shims	mm (in)	0.10 (0.004), 0.12 (0.005), 0.14 (0.006) 0.16 (0.0063), 0.18 (0.007), 0.20 (0.008) 0.50 (0.020), 0.70 (0.028), 1.00 (0.039)	
Backlash of side gear and pinion	mm (in) Standard	0.025—0.1 (0.001—0.004)	
	mm (in) Maximum	0.5 (0.020)	
Torque converter distance "A" (Refer to page 7B—162)	mm (in)	25 (0.984)	

9. FRONT AND REAR AXLE

Item \ Transaxle type		MTX		ATX	
		Non-Turbo	Turbo	Non-Turbo	Turbo
Driveshaft					
Joint type	Inside	Ball joint		Tripod joint	
	Outside	Ball joint		Ball joint	
Shaft length mm (in)	Right	360.0 (14.17)	355.5 (14.00)	355.5 (14.00)	348.8 (13.73)
	Left	360.0 (14.17)	355.5 (14.00)	355.5 (14.00)	348.8 (13.73)
Shaft diameter mm (in)		24 (0.94)	26 (1.02)	24 (0.94)	26 (1.02)
Front axle					
Front wheel bearing end play mm (in)		0.2 (0.0079) max.			
Rear axle					
Rear wheel bearing end play mm (in)		0.2 (0.0079) max.			

10. STEERING SYSTEM

Item \ Type			Manual steering	Power steering
Steering wheel	Outer diameter mm (in)		380 (15.0)	
	Turns lock to lock		4.32	2.93
Steering shaft and joints	Shaft type		Collapsible	
	Joint type		Cross joints (2)	
	Tilt stroke mm (in)		40 (1.6)	
Front steering gear	Type		Rack and pinion	
	Gear ratio		∞ (infinite)	
Power steering fluid	Capacity liter (US quarts, Imp quarts)	2WS	—	0.9 (0.95, 0.79)
		4WS	—	1.0 (1.06, 0.88)
	Type	2WS 4WS	—	Dexron II or M III

11. BRAKING SYSTEM

Item			Specifications
Brake pedal	Height mm (in)		222 $^{+5}_{-0}$ (8.74 $^{+0.2}_{-0}$)
	Free play mm (in)		4—7 (0.16—0.28)
	Reserve travel mm (in) (Clearance when pedal is depressed at 589 N (60 kg, 132 lb))		95 (3.74) min.
Master cylinder	Type		Tandem
	Bore mm (in)		22.22 (0.875)
	Fluid type		FVVSS116, DOT-3 or 4, or SAEJ1703a
Front brake	Type		Disc (ventilated)
	Thickness of pad mm (in)	Standard	10.0 (0.39)
		Minimum	2.0 (0.08)
	Thickness of disc plate mm (in)	Standard	24.0 (0.94)
		Minimum	22.0 (0.87)
	Disc plate runout mm (in)	Maximum	0.1 (0.004)
	Wheel cylinder bore mm (in)		53.97 (2.125)
Rear drum brake	Type		Leading-trailing
	Clearance between shoe and drum		Self-adjusting
	Thickness of lining mm (in)	Standard	4.5 (0.18)
		Minimum	1.0 (0.04)
	Inner diameter of drum mm (in)	Standard	228.6 (9.00)
		Maximum	230.1 (9.06)
	Wheel cylinder bore mm (in)		17.46 (0.687)
Rear disc brake	Type		Disc (solid)
	Thickness of pad mm (in)	Standard	8.0 (0.31)
		Minimum	1.0 (0.04)
	Thickness of disc plate mm (in)	Standard	10.0 (0.40)
		Minimum	8.0 (0.31)
	Disc plate runout mm (in)	Maximum	0.1 (0.04)
	Wheel cylinder bore mm (in)		30.2 (1.19)
Parking brake	Type		Center lever
	Lever notches (Pulled at 98N (10 kg, 22 lb))		5—7
Power brake unit	Diameter mm (in)		238 (9.37)
	Clearance between master cylinder piston and push rod mm (in)		0 (0)
	Fluid pressure per treading force kPa (kg/cm^2, psi)/N (kg, lb)		1,177 (12, 171)/196 (20, 44) at 0 mmHg (0 inHg) min. 7,063 (72, 1,024)/196 (20, 44) at 500 mmHg (19.7 inHg) min.
Rear wheel hydraulic control devise (system)	Type		Dual proportioning valve (Non-ABS) or ABS
	Switching point kPa (kg/cm^2, psi)		2,942 (30, 427)

12. WHEEL AND TIRE

Item \ Type			Standard	Temporary spare
Wheel	Size		5 1/2-JJ x 14 6-JJ x 15	4-T x 15
	Offset mm (in)		42 (1.65)	53 (2.09)
	Diameter of pitch circle mm (in)		114.3 (4.5)	
	Material		Steel or aluminum alloy	Steel
Tire	Size		P185/70R14 P195/60R15 87H P195/60HR15	T125/70D15
	Air pressure kPa (kgf/cm², psi)	Front	216 (2.2, 32)	412 (4.2, 60)
		Rear	177 (1.8, 26)	
Wheel and tire	Runout mm (in)	Horizontal	Steel wheel : 2.5 (0.098), Alminum alloy wheel : 2.0 (0.079) max.	
		Vertical	2.0 (0.079)	
	Unbalance g (oz)		14 inch-wheel : 10 (0.35) 15 inch-wheel : 9 (0.32) max.	

13. SUSPENSION

Item		Specification					
Front suspension							
Type		Strut					
Front wheel alignment	Toe-in mm (in)	3 ± 3 (0.12 ± 0.12)					
	Camber angle	0°17' ± 45'					
	Caster angle	1°13' ± 45'					
	King pin angle	12°47'					
Maximum front steering angle	Inner	36°00' ± 2° F2 T/C EC-AT: 34°00' ± 2°					
	Outer	31°00' ± 2° F2 T/C EC-AT: 29°00' ± 2°					
Stabilizer	Type	Torsion bar					
	Diameter mm (in)	20.0 (0.79)					
Shock absorbers	Standard Suspension	Oil type					
	Auto Adjust Suspension	Low-pressure gas sealed type					
Coil springs*	Identification color	Pink	Brown	Purple	Gray	Blue	Red
	Wire diameter (in)	12.9 (0.51)	13.1 (0.52)	13.3 (0.53)	13.6 (0.54)	13.7 (0.54)	14.2 (0.56)
	Coil inner diameter mm (in)	147.5 (5.8)					
	Free length mm (in)	370 (14.6)	372 (14.6)	365 (14.4)	350 (13.8)	358 (14.1)	340 (13.4)
	Coil number	5.42	5.53	5.46	5.34	5.45	5.28

* Refer to pages 13—5, 6 for coil spring applications

Item			Specification						
Rear suspension									
Type			Strut						
Rear wheel alignment	Toe-in mm (in)	2WS	0 ± 3 (0 ± 0.12)						
		4WS	3 ± 3 (0.12 ± 0.12)						
	Camber angle	2WS	–0°30' ± 45'						
		4WS	0°00' ± 45'						
Maximum rear steering angle (4WS)	Inner		5°00' ± 45'						
	Outer		5°00' ± 45'						
Stabilizer	Type		Torsion bar						
	Diameter mm (in)		16 (0.63)						
Shock absorbers	Standard suspension		Oil type						
	Auto adjust suspension		Low-pressure gas sealed type						
Coil springs*	Identification color		White	Yellow	Brown	Blue	Green	Red	Pink
	Wire diameter mm (in)		11.7 (0.46)	11.8 (0.46)	11.9 (0.47)	12.1 (0.48)	12.2 (0.48)	12.4 (0.49)	12.6 (0.50)
	Coil inner diameter mm (in)		127.5 (5.0)						
	Free length mm (in)		306 (12.0)	314 (12.4)	323 (12.7)	327 (12.9)	332 (13.1)	336 (13.2)	340 (13.4)
	Coil number		5.58	5.72	5.87	6.03	6.04	6.21	6.36

* Refer to pages 13—5, 6 for coil spring applications.

15. BODY ELECTRICAL SYSTEM

Item	Body type	Specification (W) (BULB TRADE NO)		
		MX-6	**Sedan**	**Touring sedan**
Front exterior lights	Halogen headlight	65/45 (9004)		
	Fog light	55	—	—
	Turn signal light	21		
	Position light	8 (67)		
	Side turn signal light	5 (168)		
Rear exterior lights	Back-up light	27 (1156)		
	License plate light	5 (168)		
	Stop/Tail light	27/8 (1157)		
	Turn signal light	27 (1156)		
	Side turn signal light	5 (168)		
	High mounted stop light	18		

Item	Body type	Specification (W) (BULB TRADE NO)		
		MX-6	Sedan	Touring sedan
Indicator and warning lights	Brake	1.4		
	Oil pressure	1.4		
	Fuel	1.4		
	Washer level	1.4		
	Rear	1.4		
	4WS	—	1.4	—
	Door	1.4		
	Seat belt	1.4		
	ABS	1.4		
	Engine check	1.4		
	Security	1.4		
	Alternator	1.4		
	High beam	3.4		
	Turn signal	3.4		
	Shift up	0.8		
	A/T mode	0.8		
	A/T position	0.8		
Interior lights	Glove compartment light	3.4		
	Interior light	10		
	Luggage compartment light	5 (168)		
Illumination lights	Motor	4.8		
	Hazard switch	1.4		
	Cigar lighter	3.4		
	Auto cruise main switch	0.5		
	AAS switch	1.4		
	Rear defroster switch	1.4		
	A/T switch	1.4		
	A/T	3.4		
	IG switch	1.4		

STANDARD BOLT AND NUT TIGHTENING TORQUE

Diameter mm (in)	Pitch mm (in)	4T			6T			8T		
		N·m	m-kg	ft-lb	N·m	m-kg	ft-lb	N·m	m-kg	ft-lb
6 (0.236)	1 (0.039)	4.2—6.2	0.43—0.63	3.1—4.6	6.9—9.8	0.7—1.0	5.0—7.2	7.8—11.8	0.8—1.2	5.8—8.8
8 (0.315)	1.25 (0.049)	9.8—14.7	1.0—1.5	7.2—10.8	16—23	1.6—2.3	12—17	18—26	1.8—2.7	13—20
10 (0.394)	1.25 (0.049)	20—28	2.0—2.9	14—21	31—46	3.2—4.1	23—34	36—54	3.7—5.5	27—40
12 (0.472)	1.5 (0.059)	34—50	3.5—5.1	25—37	55—80	5.6—8.2	41—59	63—93	6.4—9.5	46—69
14 (0.551)	1.5 (0.059)	—	—	—	75—103	7.7—10.5	56—76	102—137	10—14	75—101
16 (0.630)	1.5 (0.059)	—	—	—	116—157	12—16	85—116	156—211	16—22	115—156
18 (0.709)	1.5 (0.059)	—	—	—	167—225	17—23	123—166	221—299	23—31	163—221
20 (0.787)	1.5 (0.059)	—	—	—	231—314	24—32	171—231	308—417	31—43	227—307
22 (0.866)	1.5 (0.059)	—	—	—	314—423	32—43	231—312	417—564	43—58	307—416
24 (0.945)	1.5 (0.059)	—	—	—	475—546	41—56	298—403	536—726	55—74	396—536

SPECIAL TOOLS

GENERAL INFORMATION ..... 40— 2
ENGINE ..... 40— 3
CLUTCH AND MANUAL TRANSAXLE ..... 40— 4
AUTOMATIC TRANSAXLE ..... 40— 5
STEERING ..... 40— 6
BRAKE ..... 40— 7
FRONT AND REAR AXLE ..... 40— 7
SUSPENSION ..... 40— 8
CHECKER AND OTHERS ..... 40— 9

86U40X-001

GENERAL INFORMATION

The letters "A" and "B" in the Priority column indicate the degree of importance of each tool.

A.....Indispensable

The tools ranked "A" in this list are indispensable for performing operations satisfactorily, easily, safely and efficiently. It would, therefore, be advisable for all service shops to have these tools.

B.....Selective

The tools in this list are not as necessary as tools ranked A, but all servise shops should have these tools if possible in order to easily perform operations for efficient repair operations.

86U40X-002

Note
When ordering tool sets which consist of several tools, check the List in the Parts Catalogue or Special Service Tools Booklet (4063-11-85B) etc. to make sure that some tools are duplicated in other sets which may already have been purchased. If so, order only those new tools which are needed.

73G40X-002

ENGINE

TOOL NUMBER & DESCRIPTION	PRIORITY	ILLUSTRATION
49 0107 680A Engine stand	A	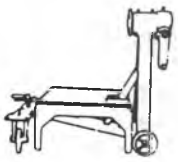
49 0636 100A Arm, valve spring lifter	A	
49 0223 105B Lifter, valve spring	A	
49 G030 040 Tool set, piston pin setting	A	
49 E301 060 Brake, ring gear	A	
49 H011 101 Lock tool, crankshaft	A	
49 H075 010 Adaptor, compression tester	B	
49 S120 710 Holder, coupling flange	A	

TOOL NUMBER & DESCRIPTION	PRIORITY	ILLUSTRATION
49 G030 005 Hanger, engine stand	A	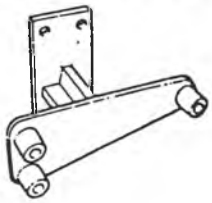
49 G030 222 Pivot, valve spring lifter	A	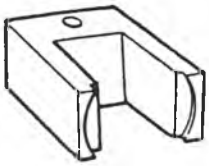
49 0249 010A Remover & installer, valve guide	A	
49 1285 071 Puller bearing	A	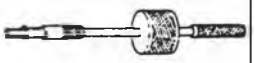
49 H012 009 Pusher, valve seal	A	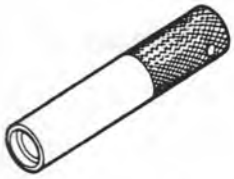
49 H018 001 Knock sensor wrench (Turbo)	A	
49 9200 146 Radiator cap tester adaptor set	A	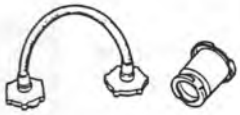
—	—	—

CLUTCH AND MANUAL TRANSAXLE

TOOL NUMBER & DESCRIPTION	PRIORITY	ILLUSTRATION
49 G017 5A0 Engine support	A	
49 SE01 310 Centering tool, clutch disc	A	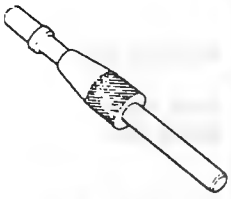
49 F401 330B Installer set, bearing	B	
49 G030 380B Shim selector set (G type transaxle)	A	
49 G027 001 Selector ϕ75 (H type transaxle)	A	
49 G030 455 Holder, (differential side gear) (G type transaxle)	B	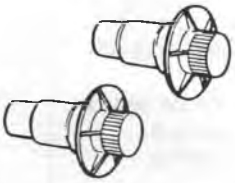
49 G017 1A0 Remover set, bearing	A	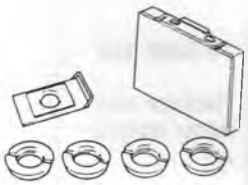
49 G017 101 Attachment N (H type transaxle)	A	

TOOL NUMBER & DESCRIPTION	PRIORITY	ILLUSTRATION
49 G019 0A0 Hanger, transaxle	A	
49 0839 425C Puller set, bearing	A	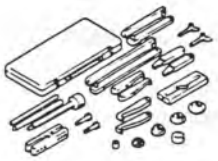
49 G030 440 Holder, primary shaft (G type transaxle)	A	
49 G027 002 Removing plate (H type transaxle)	A	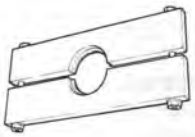
49 G030 795 Installer, oil seal	A	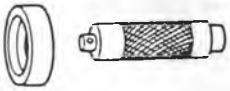
49 G030 370 Removing plate	A	
49 B017 102 Preload adaptor (H type transaxle)	A	
49 FT01 361 Remover, bearing	A	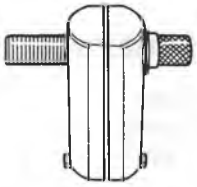

TOOL NUMBER & DESCRIPTION	PRIORITY	ILLUSTRATION
49 G017 203 Attachment P (H type transaxle)	A	
49 G017 202 Attachment	A	
49 G030 338 Attachment E (G type transaxle)	A	

TOOL NUMBER & DESCRIPTION	PRIORITY	ILLUSTRATION
49 0636 145 Puller, fan pulley boss	A	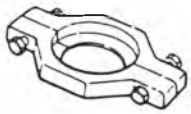
49 G027 003 Holder, diff side gear (H type transaxle)	A	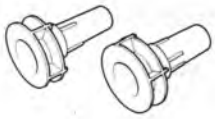
—	—	—

AUTOMATIC TRANSAXLE

TOOL NUMBER & DESCRIPTION	PRIORITY	ILLUSTRATION
49 G019 0A7 Compressor set, Return spring	A	
49 G019 0A5A Shim selector set	A	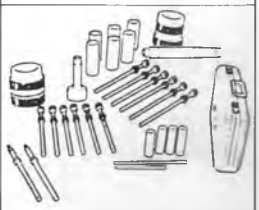
49 0378 400A Gauge set, oil pressure	A	
49 G019 011 Bearing installer	A	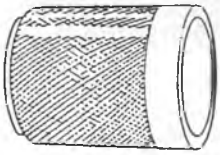

TOOL NUMBER & DESCRIPTION	PRIORITY	ILLUSTRATION
49 G019 013 Bearing remover	A	
49 G019 022 Attachment K	A	
49 FT01 439 Holder, idle gear shaft	A	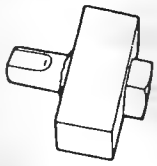
49 G019 012 Leak checker	A	

TOOL NUMBER & DESCRIPTION	PRIORITY	ILLUSTRATION
49 G019 017 Oil seal installer	A	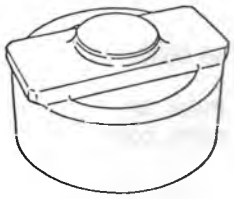
49 G019 0A2 Turbine shaft holder	A	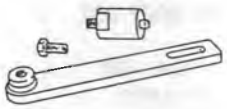

TOOL NUMBER & DESCRIPTION	PRIORITY	ILLUSTRATION
49 G019 9A1 Adapter set, EC-AT	A	
49 S120 785 Boot installer, boll joint dust cover	A	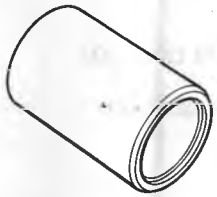

STEERING

TOOL NUMBER & DESCRIPTION	PRIORITY	ILLUSTRATION
49 0118 850C Puller, ball joint	B	
49 0180 510B Attachment	B	
49 1243 785 Boots installer, tie rod	B	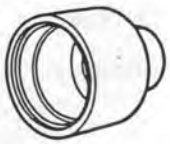
49 0208 701A Air out tool, boot	B	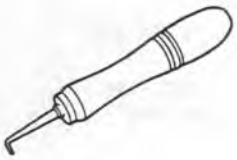
49 B032 302 Adapter	A	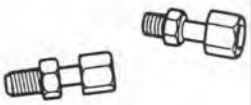

TOOL NUMBER & DESCRIPTION	PRIORITY	ILLUSTRATION
49 8038 785 Boot installer, ball joint dust cover	A	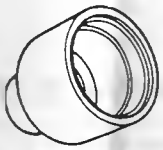
49 G032 3A0 Repair set, power steering (ESPS)	A	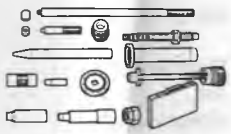
49 1232 670A Gauge set, power steering	A	
49 G033 108 Adapter, caster camber gauge	A	
49 0727 575 Puller, socket joint (4WS)	B	

TOOL NUMBER & DESCRIPTION	PRIORITY	ILLUSTRATION
49 H002 671 Adapter, power steering gauge	A	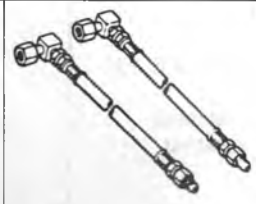
49 W023 585 Adjust wrench	A	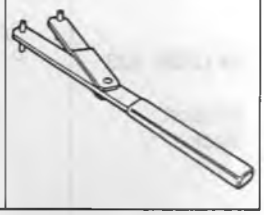

TOOL NUMBER & DESCRIPTION	PRIORITY	ILLUSTRATION
49 G032 3A1 Joint hose	A	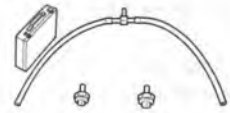
—	—	—

BRAKE

TOOL NUMBER & DESCRIPTION	PRIORITY	ILLUSTRATION
49 0259 770B Wrench, flare nut	A	
49 0221 600C Expand tool. disc brake	B	
49 B043 002 Bearing installer	A	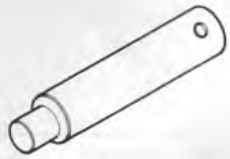

TOOL NUMBER & DESCRIPTION	PRIORITY	ILLUSTRATION
49 F043 001 Adjust gauge	A	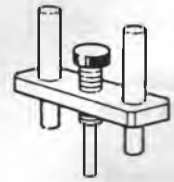
49 FA18 602 Wrench disc, brake piston	B	
—	—	—

FRONT AND REAR AXLE

TOOL NUMBER & DESCRIPTION	PRIORITY	ILLUSTRATION
49 F026 102 Installer, bearing	A	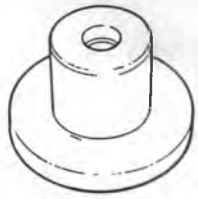

TOOL NUMBER & DESCRIPTION	PRIORITY	ILLUSTRATION
49 H026 101A Installer, sensor rotor (ABS)	A	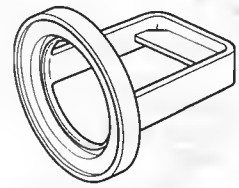

TOOL NUMBER & DESCRIPTION	PRIORITY	ILLUSTRATION
49 G033 1A1 Puller set wheel hub	A	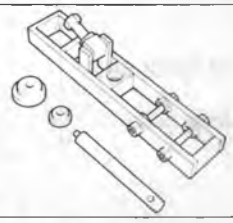
49 F027 007 Attachment ϕ 72	A	
49 H026 103 Support block	A	
49 G033 107 Installer, dust cover	A	
49 G025 001 Installer sensor rotor (ABS)	A	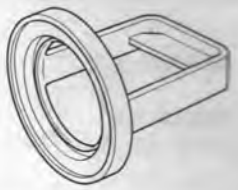

TOOL NUMBER & DESCRIPTION	PRIORITY	ILLUSTRATION
49 G026 101 Replacer bearing	A	
49 G026 103 Support block	A	
49 G026 102 Replacer bearing	A	
49 V001 795 Installer, oil seal	A	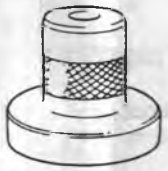
49 M005 795 Installen set, oil seal	A	

SUSPENSION

TOOL NUMBER & DESCRIPTION	PRIORITY	ILLUSTRATION
49 G028 2A0 Replacer lower arm bush (4WS)	A	
49 U034 2A0 Replacer rubber bush (4WS)	A	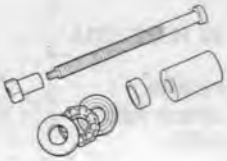

TOOL NUMBER & DESCRIPTION	PRIORITY	ILLUSTRATION
49 G034 2A0 Replacer lower arm bush	A	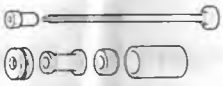
49 G034 1A0 Coil spring compressor	A	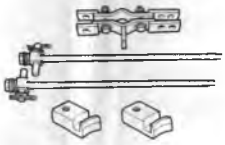

CHECKER AND OTHER

TOOL NUMBER & DESCRIPTION	PRIORITY	ILLUSTRATION
49 0187 280 Oil pressure gauge	B	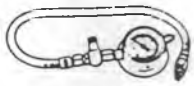
49 0305 870A Tool set, window	A	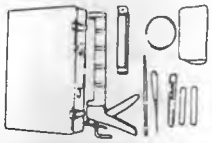
49 0839 285 Checker, fuel and thermometer	A	
49 9200 020 V-ribbed belt tension gauge	B	
49 0242 685A Switch starter	B	
49 9200 162 Monitor, engine signal	A	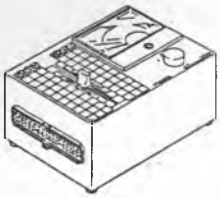
49 F018 001 Checker lamp	A	
49 9200 443 Adapter harness	A	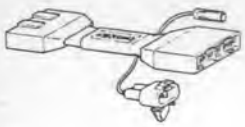

TOOL NUMBER & DESCRIPTION	PRIORITY	ILLUSTRATION
49 G018 901 Adapter harness	A	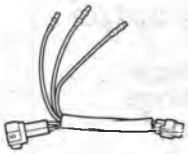
49 B092 953 Injector checker	A	
49 H075 280 Tester, compression	A	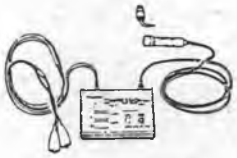
49 9200 010 ACC checker	A	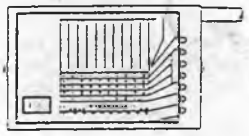
49 G019 9A1 Adapter set, EC-AT	A	
49 H018 9A1 Self-diagnosis checker	A	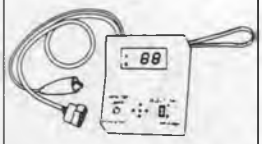
49 9200 750A Multi-pressure tester	A	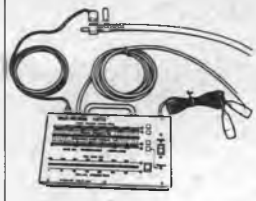
49 G018 001 Adapter harness	A	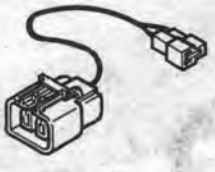

TOOL NUMBER & DESCRIPTION	PRIORITY	ILLUSTRATION
49 9200 163 Adapter harness	A	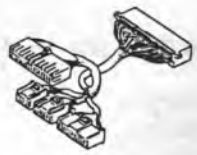
49 F018 002 Igniter checker	A	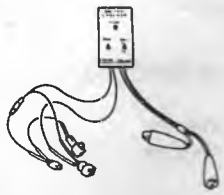

TOOL NUMBER & DESCRIPTION	PRIORITY	ILLUSTRATION
49 U018 003 Adapter harness	A	
—	—	—

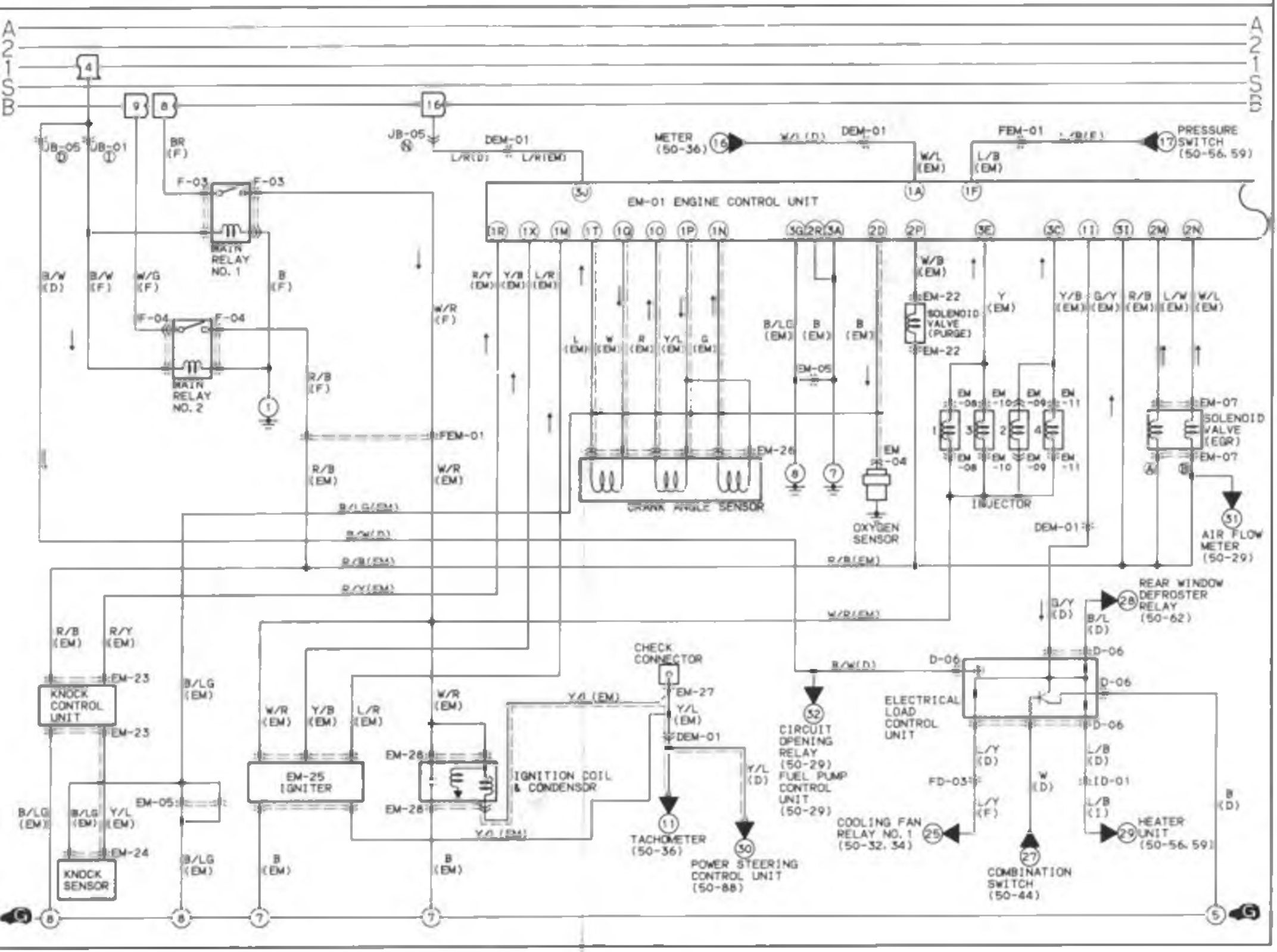
EM-01 ENGINE CONTROL UNIT
MAIN RELAY NO. 1
MAIN RELAY NO. 2
SOLENOID VALVE (PURGE)
SOLENOID VALVE (EGR)
INJECTOR
CRANK ANGLE SENSOR
OXYGEN SENSOR
AIR FLOW METER (50-29)
PRESSURE SWITCH (50-56, 59)
METER (50-36)
REAR WINDOW DEFROSTER RELAY (50-62)
KNOCK CONTROL UNIT
KNOCK SENSOR
EM-25 IGNITER
IGNITION COIL & CONDENSOR
CHECK CONNECTOR
TACHOMETER (50-36)
POWER STEERING CONTROL UNIT (50-88)
CIRCUIT OPENING RELAY (50-29)
FUEL PUMP CONTROL UNIT (50-29)
ELECTRICAL LOAD CONTROL UNIT
COOLING FAN RELAY NO. 1 (50-32, 34)
COMBINATION SWITCH (50-44)
HEATER UNIT (50-56, 59)

FOR TURBO ■ENGINE & FUEL CONTROL SYSTEM

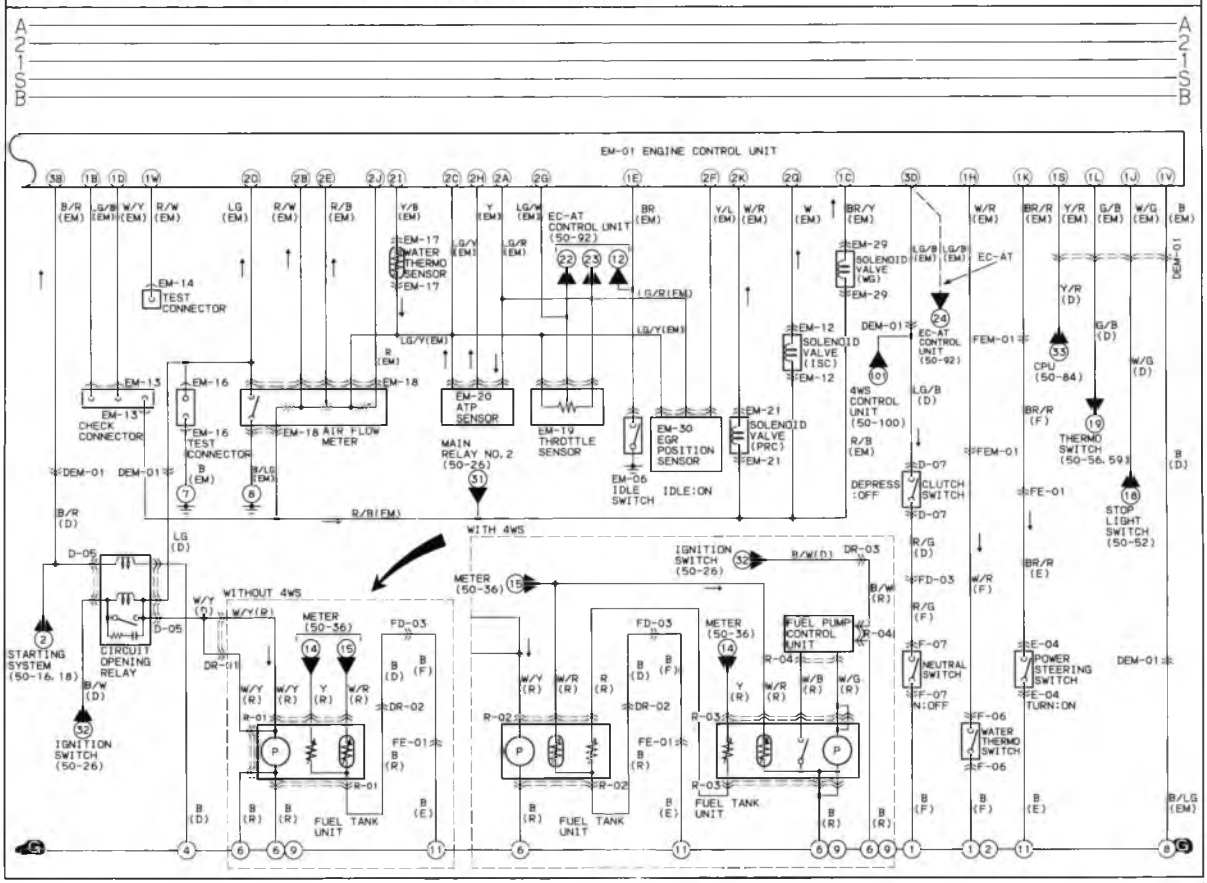

D-05 CIRCUIT OPENING RELAY(D)

D-07 CLUTCH SWITCH(D)

F-06 WATER THERMO SWITCH(F)

F-07 NEUTRAL SWITCH(F)

EM-01 ENGINE CONTROL UNIT(EM)

EM-06 IDLE SWITCH (EM)

EM-12 SOLENOID VALVE (ISC)(EM)

EM-13 CHECK CONNECTOR(EM)

EM-14 TEST CONNECTOR (EM)

EM-16 TEST CONNECTOR(EM)

EM-17 WATER THERMO SENSOR(EM)

EM-18 AIR FLOW METER(EM)

EM-19 THROTTLE SENSOR(EM)

EM-20 ATP SENSOR(EM)

EM-21 SOLENOID VALVE (PRC)(EM)

EM-29 SOLENOID VALVE (WG)(EM)

EM-30 EGR POSITION SENSOR(EM)

R-01 FUEL TANK UNIT(R)

R-02 FUEL TANK UNIT(R) (TRANSFER)

R-03 FUEL TANK UNIT(R)

R-04 FUEL PUMP CONTROL UNIT(R)

E-04 POWER STEERING SWITCH(E)

FE-01 FRONT(F)-ENGINE(E)

FEM-01 FRONT(F)-EMISSION(EM)

DEM-01 DASH(D)-EMISSION(EM)

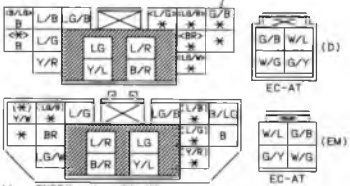

DR-01 DASH(D)-REAR(R)

DR-03 DASH(D)-REAR(R)

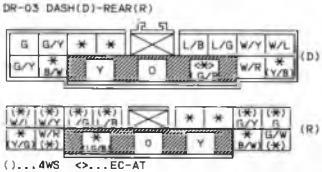

FD-03 FRONT(F)-DASH(D)

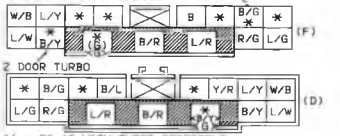

DR-02 DASH(D)-REAR(R)

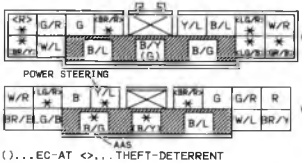

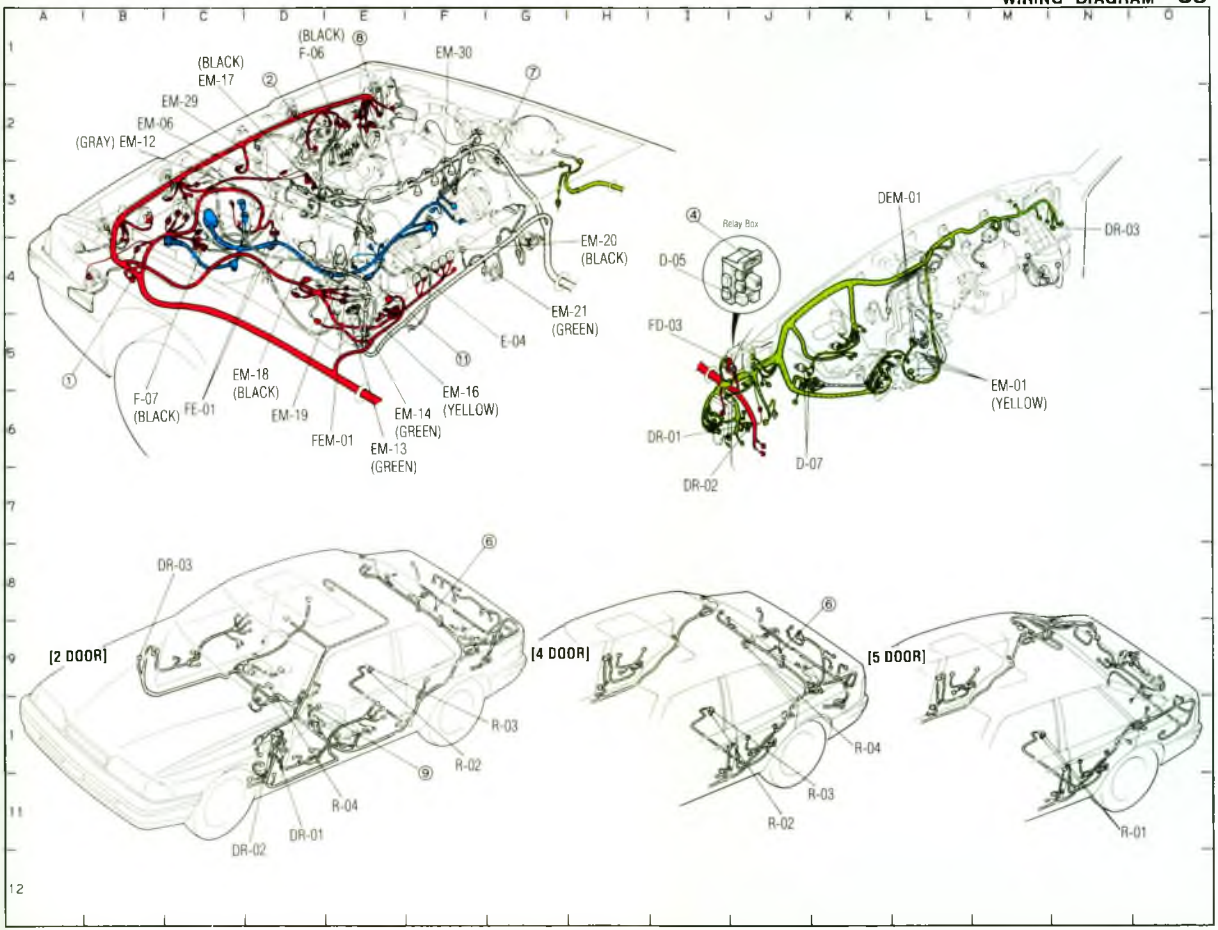
(BLACK) F-06
⑧
EM-30
(BLACK) EM-17
②
⑦
EM-29
EM-06
(GRAY) EM-12
EM-20 (BLACK)
EM-21 (GREEN)
E-04
⑪
①
F-07 (BLACK)
FE-01
EM-18 (BLACK)
EM-19
FEM-01
EM-13 (GREEN)
EM-14 (GREEN)
EM-16 (YELLOW)
④
Relay Box
D-05
FD-03
DR-01
DR-02
D-07
DEM-01
DR-03
EM-01 (YELLOW)
⑥
DR-03
[2 DOOR]
R-03
R-02
⑨
R-04
DR-01
DR-02
[4 DOOR]
⑥
R-04
R-03
R-02
[5 DOOR]
R-01

- TURN & HAZARD FLASHER LIGHTS
- HORN
- HIGH MOUNTED STOP LIGHT
- STOP LIGHTS
- BACK-UP LIGHTS

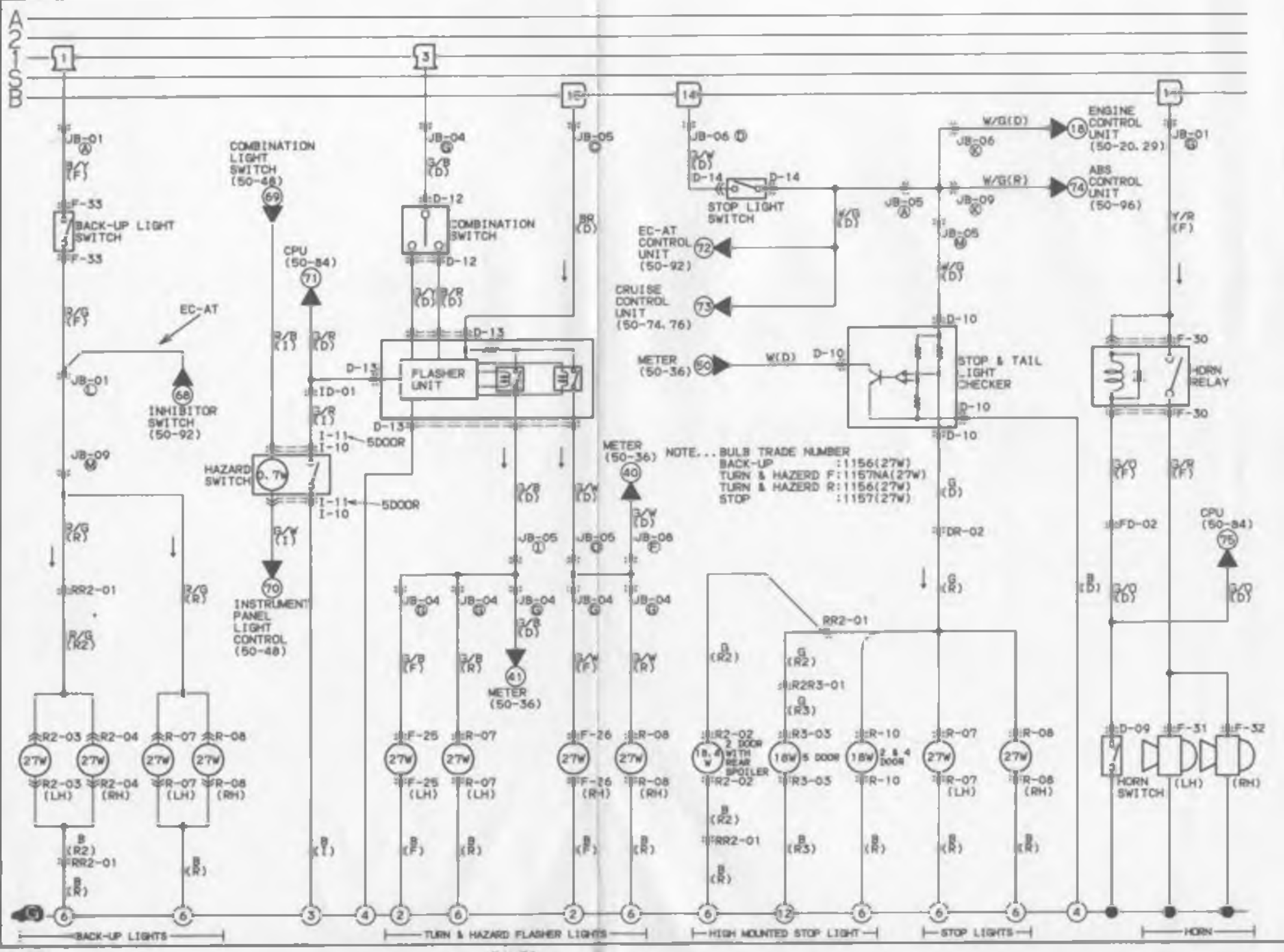

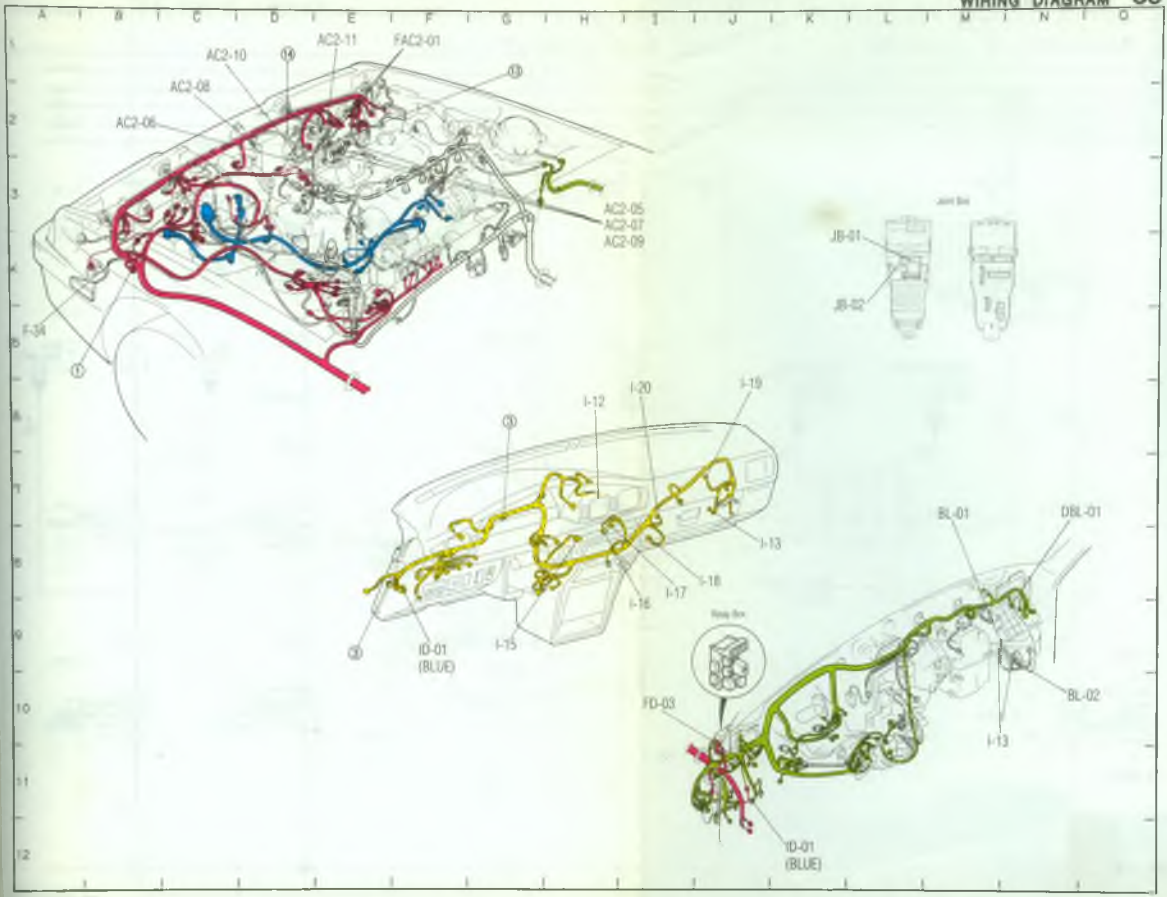
AC2-10
AC2-11
FAC2-01
AC2-08
AC2-06
AC2-05
AC2-07
AC2-09
F-34
JB-01
JB-02
I-12
I-20
I-19
I-13
I-18
I-17
I-16
I-15
ID-01
(BLUE)
BL-01
DBL-01
BL-02
FD-03
ID-01
(BLUE)

GENERAL INFORMATION

IMPORTANT INFORMATION..... G-2
FUNDAMENTAL PROCEDURES..... G-2
JACK & SAFETY STAND POSITIONS..... G-6
VEHICLE LIFT POSITIONS..... G-7
TOWING..... G-8
CHASIS NUMBER LOCATION..... G-9
ENGINE MODEL & NUMBER LOCATION..... G-9
UNITS..... G-9
ABBREVIATIONS..... G-9
CAUTION..... G-10

IMPORTANT INFORMATION

BASIC ASSUMPTIONS

This workshop manual assumes that you have and know how to properly use certain special tools which are necessary for the safe and efficient performance of service operations on Mazda vehicles. The manual also assumes that you are familiar generally with automobile systems and basic service and repair procedures. You should not attempt to use this manual unless these assumptions are correct and you understand the consequences described below.

SAFETY RISK

This manual contains certain notes, warnings, etc., which you should carefully read and follow in order to eliminate the risk of personal injury to yourself or others and the risk of improper service which may damage the vehicle or render it unsafe. The fact that there are no such notes, etc., with respect to any specific service method does not mean that there is no possibility that personal safety or vehicle safety will be jeopardized by the use of incorrect methods or tools.

POSSIBLE LOSS OF WARRANTY

The manufacturer's warranty on Mazda vehicles and engines can be voided if improper service or repairs are performed by persons other than an authorized Mazda dealer.

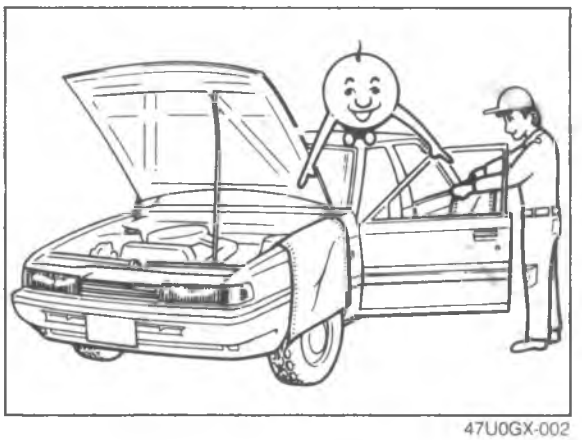

47U0GX-002

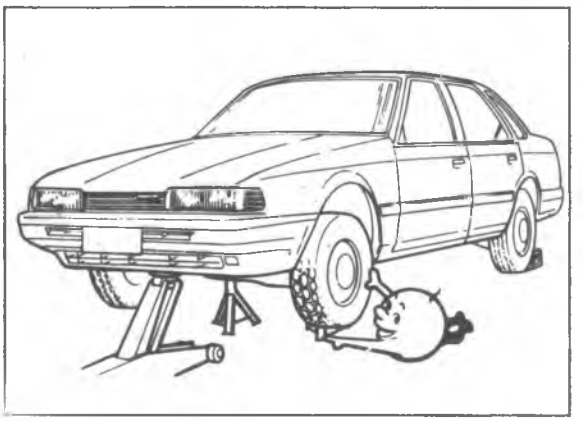

47U0GX-003

FUNDAMENTAL PROCEDURES

As you read through the procedure, you will come across NOTES, CAUTIONS, and WARNINGS. Each one is there for a specific purpose. **NOTES** give you **added information** that will help you to complete a particular procedure. **CAUTIONS** are given to prevent you from making an error that could **damage the vehicle. WARNINGS** remind you to be especially careful in those areas where carelessness can cause **personal injury.** The following list contains some general WARNINGS that you should follow when you work on a vehicle.

PROTECTION OF THE VEHICLE

Always be sure to cover fenders, seats, and floor areas before starting work.

A WORD ABOUT SAFETY

The following precautions must be followed when jacking up the vehicle.

1. Block wheels.
2. Use only specified jacking positions.
3. Support vehicle with safety stands (rigid racks).

Start the engine only after making certain the engine compartment is clear of tools and people.

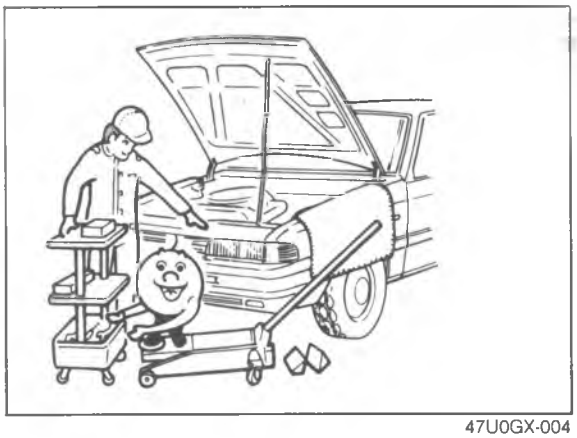

47U0GX-004

PREPARATION OF TOOLS AND MEASURING EQUIPMENT

Be sure that all necessary tools and measuring equipment are available before starting any work activity.

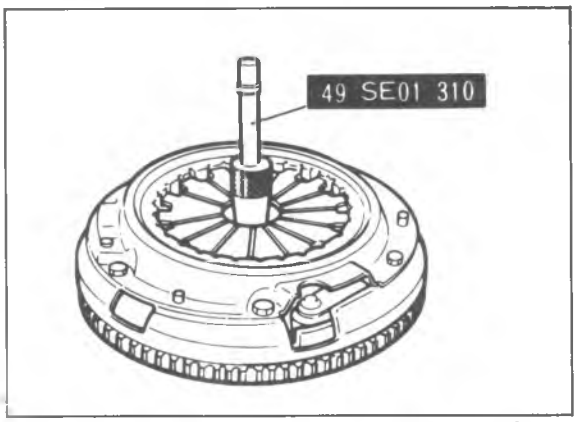

47U0GX-005

SPECIAL TOOLS

Use special tools when they are required.

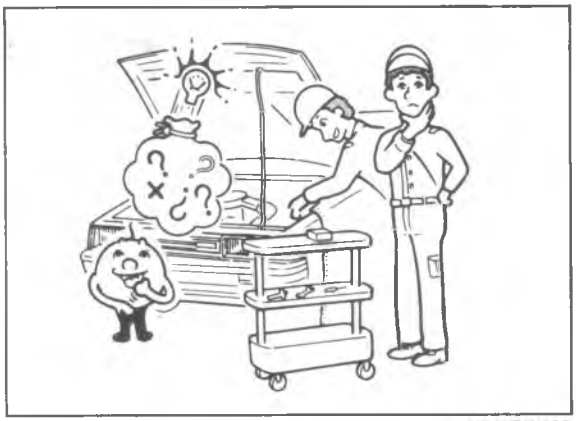

47U0GX-006

REMOVAL OF PARTS

While correcting a problem, try also to determine its cause. Begin work only after first learning which parts and subassemblies must be removed and disassembled for replacement or repair.

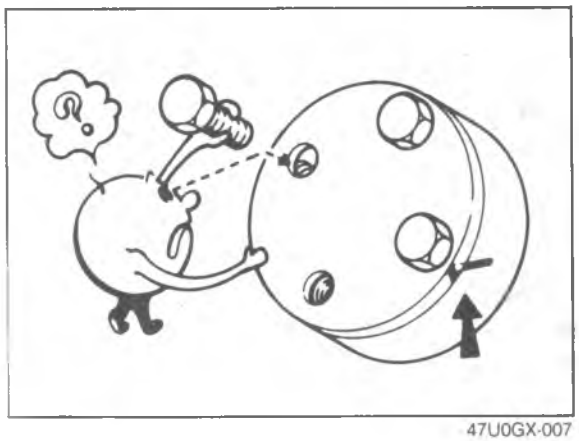

47U0GX-007

DISASSEMBLY

If the disassembly procedure is complex, requiring many parts to be disassembled, all parts should be disassembled in a way that will not affect their performance or external appearance, and be identified so that reassembly can be performed easily and efficiently.

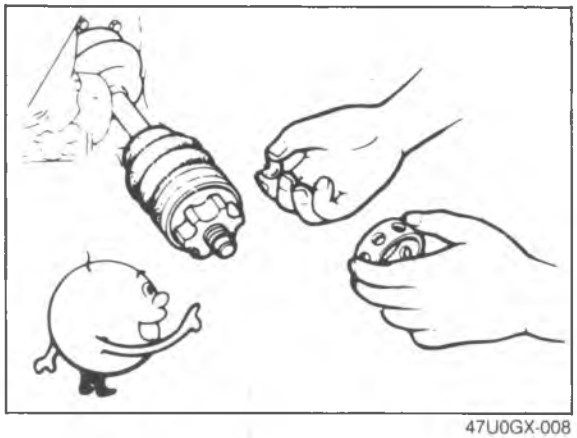

47U0GX-008

DISASSEMBLY

1. Inspection of parts

Each part when removed should be carefully inspected for malfunctioning, deformation, damage, and other problems.

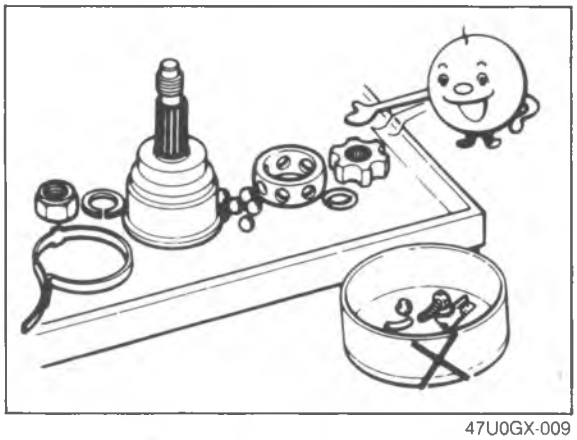

47U0GX-009

2. Arrangement of parts

All disassembled parts should be carefully arranged for reassembly.
Be sure to separate or otherwise identify the parts to be replaced from those that will be reused.

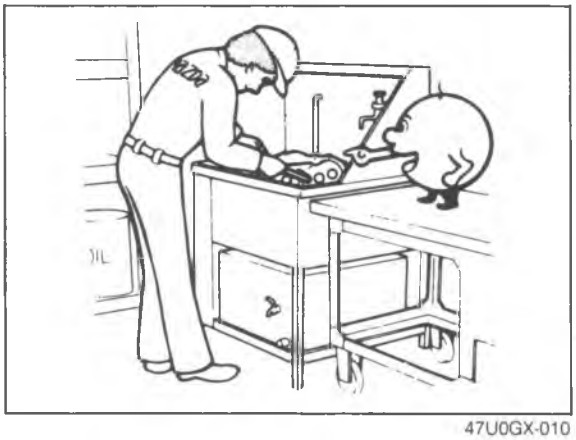

47U0GX-010

3. Cleaning parts for reuse

All parts to be reused should be carefully and thoroughly cleaned in the appropriate method.

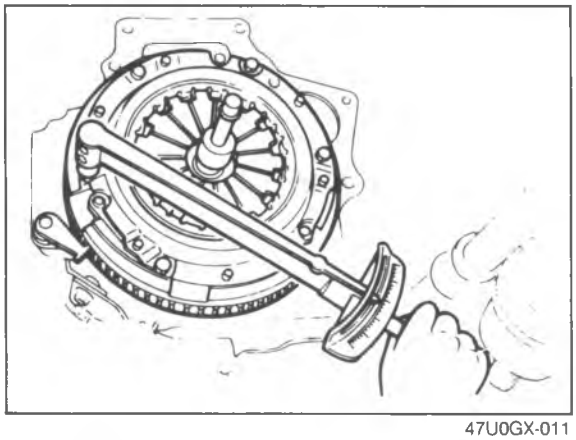

47U0GX-011

REASSEMBLY

Standard values, such as torques and certain adjustments, must be strictly observed in the reassembly of all parts.
If removed, these parts should be replaced with new ones:

1. Oil seals
2. Gasket
3. O-rings
4. Lock washers
5. Cotter pins (split pins)
6. Nylon nuts

VEHICLE LIFT (2-SUPPORT TYPE) POSITIONS

FRONT END
Frame
Side sills (front)

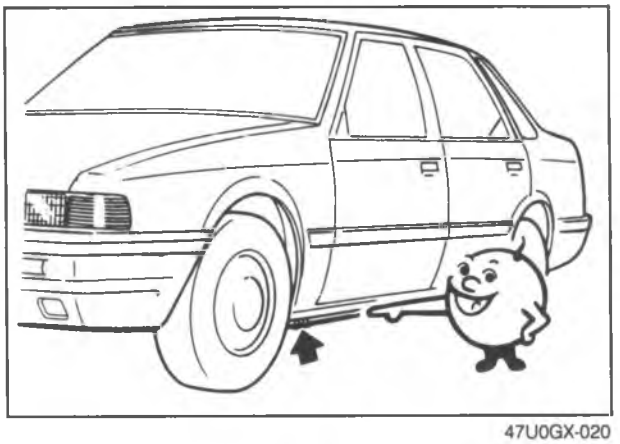

47U0GX-020

REAR END
Frame
Side sills (rear)

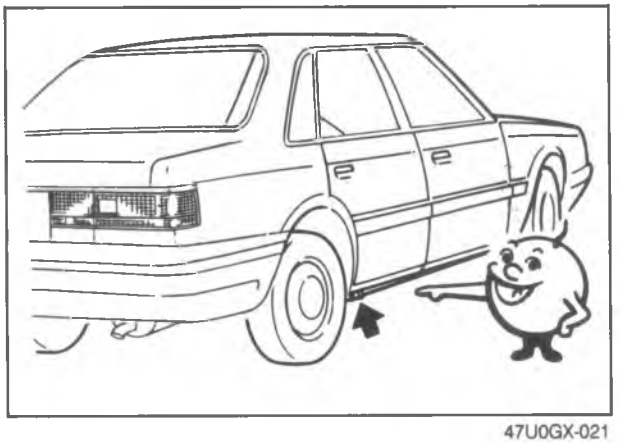

47U0GX-021

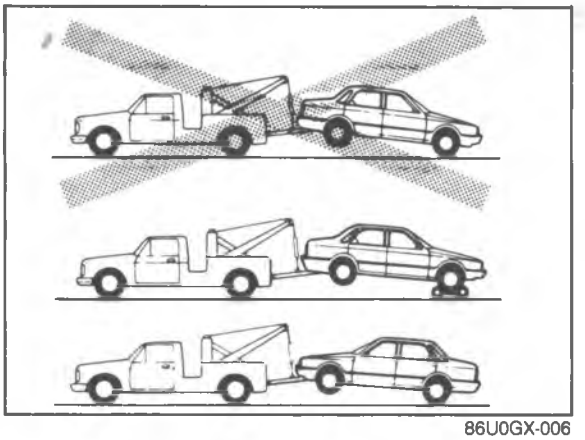

86U0GX-006

TOWING

Proper lifting or towing procedures are necessary to prevent damage to the vehicle during any towing operation. State and local laws applicable to vehicles in tow must be followed.

With eigher automatic or manual transaxle, release the parking brake, place the selector lever (or shift lever) in neutral and set the ignition key in the "ACC" position. As a general rule, towed vehicles should be pulled with the driving wheels off the ground.

If excessive damage or other conditions prevent towing the vehicle with the driving wheels off the ground, use wheel dollies.

Caution
Do not tow the vehicle backward with driving wheels on the ground.
This may damage the transaxle internal parts.
Do not start or run the engine while vehicle is being towed.
(Only for 4WS vehicle)
When towing the vehicle with the front wheels, raised, be sure the rear wheels are in the straight-ahead position.

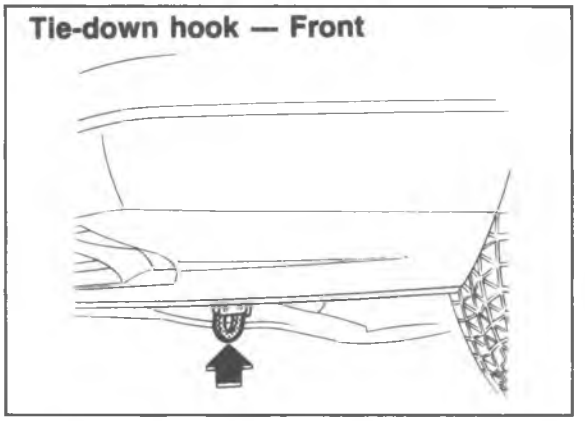

86U0GX-007
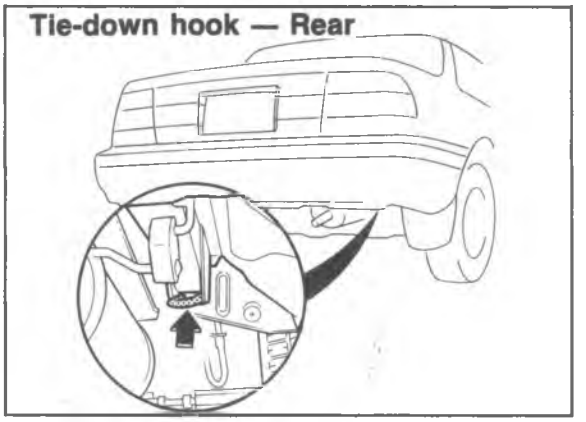
Caution
Do not use the hook loops under the front and rear of vehicle for towing purposes. These hook loops are designed ONLY for transport tie-down. If tie-down hook loops are used for towing, front/rear skirt and bumper will be damaged.